SHEET: COW-A1 (05/2005)

LC-XXX (NOTE 1)

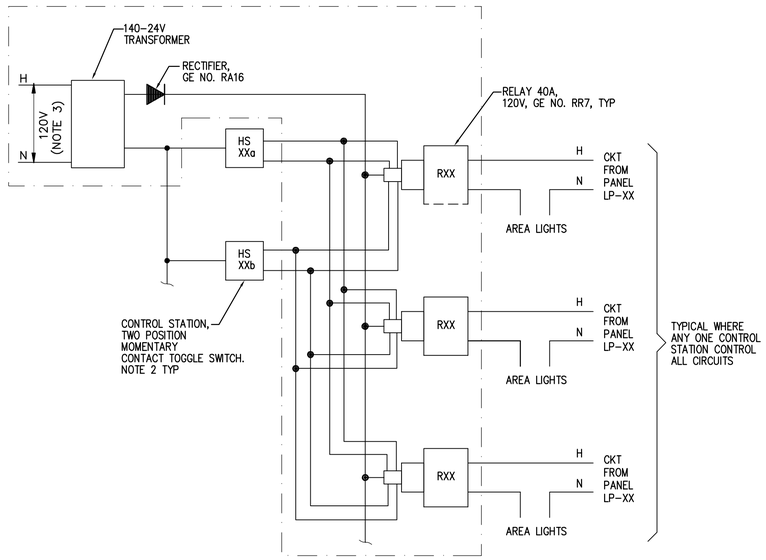

NOTES:

1. PROVIDE COMPLETE LOW VOLTAGE CONTROL ASSEMBLY MOUNTED IN SURFACE ENCLOSURE. ASSEMBLY SHALL BE COMPLETE, WITH MOUNTING FRAMES FOR RELAY, RECTIFIER, AND TERMINAL STRIP.
2. PROVIDE 3#14 IN 21mm CONDUIT FROM CONTROL STATION TO LOW VOLTAGE LIGHTING CONTROLLER.
3. PROVIDE 120V FROM ONE OF THE INCOMING CIRCUITS.
4. WIRING SHOWN, IS FOR TWO CONTROLLERS CONTROLLING THREE RELAY CIRCUITS. COORDINATE WIRING FOR OTHER REQUIREMENTS.

LC-FXX	LOCATION OF LC-FXX	HSX 01	R-XXX	LP-XX, CCT.XX
LC-F01	FILTER PIPE GALLERY	HS1	R-F01	LP-F01, CCT. 1
		HS2	R-F02	LP-F01, CCT. 3
		HS3	R-F03	LP-F01, CCT. 5
		HS4		
LC-P11	DAF PUMP GALLERY GALLERY	HS1	R-P11	LP-P11, CCT. 1
		HS2	R-P12	LP-P11, CCT. 3
		HS3	R-P13	LP-P11, CCT. 5
LC-A01	DAF PUMP GALLERY GALLERY	HS1	R-A11	LP-A11, CCT. 5
		HS2	R-A12	LP-A11, CCT. 7
		HS3	R-A13	LP-A11, CCT. 9
LC-A11	ADMIN BUIDING LOWER LEVEL	HS1	R-A01	LP-A11, CCT. 1
		HS2	R-A02	LP-A11, CCT. 3
		HS3	R-A03	LP-A11, CCT. 11
			R-A04	LP-A11, CCT. 13
			R-A05	LP-A11, CCT. 15
			R-A06	LP-A11, CCT. 17
			R-A07	LP-A11, CCT. 19
LC-R21	RESIDUALS HANDLING AREA	HS1a	R-R21	LP-R21, CCT. 1
		HS6a	R-R22	LP-R21, CCT. 2
		HS2b	R-R23	LP-R21, CCT. 35,37
		HS7b		
		HS3c	R-R24	LP-R21, CCT. 39,41
		HS8c		
		HS4d	R-R25	LP-R21, CCT. 36,38
		HS9d		
		HS5e	R-R26	LP-R21, CCT. 40,42
		HS10e		
LC-R22	PILOT PLANT ROOM	HS21	R-R28	LP-R21, CCT. 3
		HS22	R-P29	LP-R21, CCT. 4
		HS23		
LC-R31	RESIOUALS HANDLING AREA	HS1a	R31	LP-R31, CCT. 11a
		HS4a	R32	LP-R31, CCT. 13a
		HS7a		
		HS10a		
		HS2b	R33	LP-R31, CCT. 12b
		HS5b	R34	LP-R31, CCT. 14b
		HS8b		
		HS11b		
		HS3c	R35	LP-R31, CCT. 15c
		HS6c	R36	LP-R31, CCT. 17c
		HS9c		
		HS12c		
LC-A21	ADMIN AREA 2nd FLOOR	HS1	R-A22	LP-A21, CCT. 23
		HS2	R-A23	LP-A21, CCT. 24
		HS3	R-A24	LP-A21, CCT. 25
			R-A25	LP-A21, CCT. 27
LC-A31	ADMIN AREA 3rd FLOOR	HS1	R-A31	LP-A31, CCT. 71
		HS4	R-A32	LP-A31, CCT. 73
		HS7		
		HS2	R-A33	LP-A31, CCT. 69
		HS5	R-A34	LP-A31, CCT. 67
		HS8	R-A35	LP-A31, CCT. 63
			R-A36	LP-A31, CCT. 65
		HS3	R-A37	LP-A31, CCT. 69
		HS6	R-A38	LP-A31, CCT. 63
		HS9	R-A39	LP-A31, CCT. 65
LC-C31	ELECTRICAL ROOM No.3 02	HS1	R-C31	LP-H31, CCT. 36
		HS3		
		HS2	R-C32	LP-H31, CCT. 38
		HS4		

01

LC-FXX	LOCATION OF LC-FXX	HSX 01	R-XXX	LP-XX, CCT.XX
LC-F31	FILTER GALLERY	HS1a	R-F31	LP-H31, CCT. 1
		HS4a	R-F32	LP-H31, CCT. 2
		HS7a	R-F33	LP-H31, CCT. 3
		HS10a	R-F34	LP-H31, CCT. 4
			R-F35	LP-H31, CCT. 5
			R-F36	LP-H31, CCT. 1
		HS2b	R-F37	LP-H31, CCT. 8,10
		HS5b	R-F38	LP-H31, CCT. 12,14
		HS8b	R-F39	LP-H31, CCT. 16,18
		HS11b	R-F40	LP-H31, CCT. 20,22
			R-F41	LP-H31, CCT. 5
			R-F42	LP-H31, CCT. 1
		HS3c	R-F43	LP-H31, CCT. 7,9
		HS6c	R-F44	LP-H31, CCT. 11,13
		HS9c	R-F45	LP-H31, CCT. 15,17
		HS12c	R-F46	LP-H31, CCT. 19,21
			R-F47	LP-H31, CCT. 5
LC-O31	OZONE ROOM	HS1	R-O31	LP-R31, CCT. 25
		HS3	R-O32	LP-R31, CCT. 23
		HS2	R-O33	LP-R31, CCT. 22
		HS4	R-O34	LP-R31, CCT. 24
LC-P31	DAF AREA		R-P31	LP-P31, CCT. 1,3
		HS1	R-P32	LP-P31, CCT. 2,4
		HS7	R-P33	LP-P31, CCT. 5,7
		HS13	R-P34	LP-P31, CCT. 6,8
			R-P35	LP-P31, CCT. 9,11
			R-P36	LP-P31, CCT. 42
			R-P37	LP-P31, CCT. 10,12
		HS2	R-P38	LP-P31, CCT. 13,15
		HS8	R-P39	LP-P31, CCT. 14,16
		HS14	R-P40	LP-P31, CCT. 17,19
			R-P41	LP-P31, CCT. 44
			R-P42	LP-P31, CCT. 18,20
		HS3	R-P43	LP-P31, CCT. 21,23
		HS9	R-P44	LP-P31, CCT. 22,24
		HS15	R-P45	LP-P31, CCT. 25,27
			R-P46	LP-P31, CCT. 26,28
		HS4	R-P47	LP-P31, CCT. 29,31
		HS10	R-P48	LP-P31, CCT. 30,32
		HS16	R-P49	LP-P31, CCT. 33,35
			R-P50	LP-P31, CCT. 34,36
		HS5	R-P51	LP-P31, CCT. 43
		HS11	R-P52	LP-P31, CCT. 45
		HS17		
		HS6	R-P53	LP-P31, CCT. 45
		HS12	R-P54	LP-P31, CCT. 47
		HS18		

LOW VOLTAGE LIGHTING CONTROLLER DIAGRAM AND CIRCUIT SCHEDULE

APEGM
Certificate of Authorization
CH2M HILL Canada Ltd.
No. 1441 Expiry: April 30, 2007

B.M. ELEV.

NO.	REVISIONS	DATE	BY
02	742-2005 ADDENDUM 5	06/05/19	LL
01	742-2005 ADDENDUM 3	06/05/05	LL
00	ISSUED FOR TENDER	06/03/29	LL

CH2MHILL
Frederickson Cooper ARCHITECTS
EarthTech A Tyco International Ltd. Company

DESIGNED BY	JT	CHECKED BY	ND
DRAWN BY	KJ	APPROVED BY	AHL
SCALE:	NTS	RELEASED FOR CONSTRUCTION BY:	R. SOROKOWSKI
DATE	2005/11/08	DATE	2006/03/29

ENGINEER'S SEAL
ORIGINAL SIGNED BY
L.D. LLEWELLYN
2006/03/29

CONSULTANT DRAWING NO.
WB-E0553

Winnipeg
THE CITY OF WINNIPEG
WATER AND WASTE DEPARTMENT
ENGINEERING DIVISION

WATER TREATMENT PLANT
MAIN BUILDING
MECHANICAL AND ELECTRICAL

ELECTRICAL

CONTROL DIAGRAM

CITY FILE NUMBER
SHEET OF
CITY DRAWING NUMBER
1-06018-H-E0553-001-02D

Last Save: 2006-05-11 12:06 PM

C:\DOCUMENTS AND SETTINGS\SEVERITT\MY DOCUMENTS\NDMPROJ\321352 - WINNIPEGWTP\DN_WB-E0553_CH2M.DWG