SHEET: COW-A1 (05/2005)

DOOR SCHEDULE

01

NO.	WIDTHxHEIGHTxTHICKNESS	DOOR TYPE	DOOR MAT.	DOOR FINISH	DOOR GLASS	FRAME MAT.	FRAME FINISH	FRAME TYPE	FRAME JAMB	FRAME HEAD	HARDWARE GROUP	RATING (HR)	REMARKS
101A	3000x3000 01	D3	–	GALV	–	STL	PNT	–	J3	H3	–	–	
101B	900x2150x45	D1	HM	PNT	–	HM	PNT	F1	J2	H2	2	–	
101C	2–900x2150x45	D2	HM	PNT	GWG	HM	PNT	F2	J1	H1	1	¾H FR	
101D	900x2150x45	D1	HM	PNT	–	HM	PNT	F1	J2	H2	3	–	
101E	900x2150x45	D1	HM	PNT	–	HM	PNT	F1	J4	H4	2	–	
101F	900x2150x45	D1	HM	PNT	–	HM	PNT	F1	J4	H4	2	–	
101G	900x2150x45	D1	HM	PNT	–	HM	PNT	F1	J4	H4	2	–	
102A	900x2150x45	D1	HM	PNT	–	HM	PNT	F1	J2	H2	2	–	
102B	900x2150x45	D1	HM	PNT	–	HM	PNT	F1	J2	H2	3	–	

ABBREVIATIONS:

ALUM= ALUMINUM

FR = FIRE RATING

GYP BD = GYPSUM BOARD

GWG = GEORGIAN WIRED GLASS

HM = HOLLOW METAL

MTL = METAL

N/A = NOT APPLICABLE

PNT = PAINTED

PREFIN = PREFINISHED

STL = STEEL

TSG = TEMPERED SAFETY GLASS

01

HARDWARE SCHEDULE

GROUP 1 D101C (DOUBLE DOOR) (RATED)

6 BUTT HINGES	TA 314 115x100mm NRP	McKINNEY	26D
1 LOCKSET	AU5407 x ASA	YALE (W/CONST CYL)	26D
2 FLUSHBOLTS	F65	STANDARD METAL	26D
2 ACOUSTIC WEATHERSTRIP	W29 1/6 + 2/7	KN CROWDER	CA
2 DOOR SWEEP	W245 – 900 & 600mm	KN CROWDER	CA
1 THRESHOLD	CT11 – 1800	KN CROWDER	CA
1 ASTRAGAL	W40P – 2100	KN CROWDER	CA
2 KICK PLATE	K10C	STANDARD METAL	26D

GROUP 2 D101B, D102A, D101E, D101F, D101G

3 BUTT HINGES	TA 314 115x100mm NRP	McKINNEY	26D
1 LOCKSET	AU5402 x ASA	YALE (W/CONST CYLINDER)	26D
1 WEATHERSTRIP	W29 1/3 + 2/7	KN CROWDER	CA
1 DOOR SWEEP	W24S – 900mm	KN CROWDER	CA
1 THRESHOLD	CT11 – 900mm	KN CROWDER	CA
1 CLOSER	4040	LCN	689
1 WALL STOP	S123	STANDARD METAL	26D
1 KICK PLATE	K10C	STANDARD METAL	26D

GROUP 3 D101D, D102B

3 BUTT HINGES	TA 314 115x100mm NRP	McKINNEY	26D
1 LOCKSET	AU5402 x ASA	YALE (W/CONST CYLINDER)	26D
1 WALL STOP	S122	STANDARD METAL	26D
1 CLOSER	1461	LCN	689
1 KICK PLATE	K10C	STANDARD METAL	26D
1 ACOUSTIC WEATHERSTRIP	W29 1/3 + 2/7	KN CROWDER	CA
1 DOOR SWEEP	W24S – 900mm	KN CROWDER	CA
1 THRESHOLD	CT11 – 900mm	KN CROWDER	CA

BLANK (NO HARDWARE) ON EXTERIOR

ALL KICKPLATES TO BE MOUNTED ON PUSH SIDE

BUILDING CODE ANALYSIS

Winnipeg Water Treatment Plant
Standby Power Generator Building
Winnipeg, Manitoba

Building Code Analysis

1.0 Description

- Building Area: 729.70 m2 (7,850.4 sf)
- Sprinklered: No
- Occupancy Type: Group F, Division 3
- Occupant Load 4 (intermittent)
- Streets (0)

2.0 Regulation

.1 This project may be regulated under **3.2.2.80., Group F, Division 3, One Storey**

.2 **Classification**

.1 Requirements:
- 5,600 m2 (60,256 sf) Building Area (Conforms @ 729.70 m2)
- (1) Stories (Conforms)
- Unsprinklered (Conforms)
- Type "F-3" Occupancy (Conforms)
- (1) Street (Conforms)

.2 Stipulations:
- May be Combustible or Non-combustible construction
- Floor Assemblies - 45 minutes FRR. (Conforms)
- Load bearing Elements - 45 minutes FRR. (Conforms)

3.0 General Conformance

.1 **3.4.2.4 - Travel Distance**

.1 Maximum travel distance to an exit is 30 m (98') - Conforms (maximum travel of 20.5 m (67')).

.2 **3.4.2.1 - Number of Exits**

.1 Conforms (two (2) required - five (5) provided).

.3 **3.2.3.1 - Limiting Distance**

.1 No issues

.4 **Fire Rating Separations**

.1 1 HR FRR separation required between Electrical and Generator rooms
(Generator Room contains fuel-fired appliances - diesel stand-by generators)

ROOM FINISH SCHEDULE

ROOM No.	ROOM NAME	FLOOR MAT.	FLOOR FIN.	FLOOR BASE	NORTH WALL MAT.	NORTH WALL FIN.	SOUTH WALL MAT.	SOUTH WALL FIN.	EAST WALL MAT.	EAST WALL FIN.	WEST WALL MAT.	WEST WALL FIN.	CEILING MAT.	CEILING FIN.	HGT. AFF	REMARKS
GROUND FLOOR																
101	GENERATOR ROOM	CONC	SEAL	SEAL	CONC BLK	PNT	CONC BLK	PNT	CONC BLK	PNT	CONC BLK	PNT	CONC	PNT	8326	
102	ELECTRICAL ROOM	CONC	SEAL	SEAL	CONC BLK	PNT	CONC BLK	PNT	CONC BLK	PNT	CONC BLK	PNT	CONC	PNT	8326	

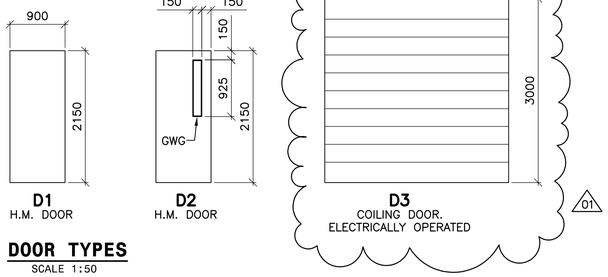

D1 H.M. DOOR

D2 H.M. DOOR

D3 COILING DOOR. ELECTRICALLY OPERATED

DOOR TYPES
SCALE 1:50

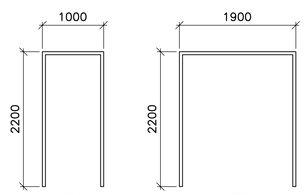

F1 F2

FRAME TYPES
SCALE 1:50

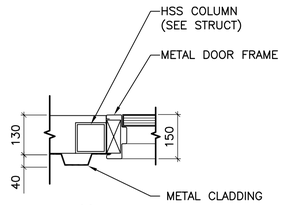

J4

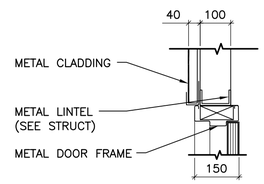

H4

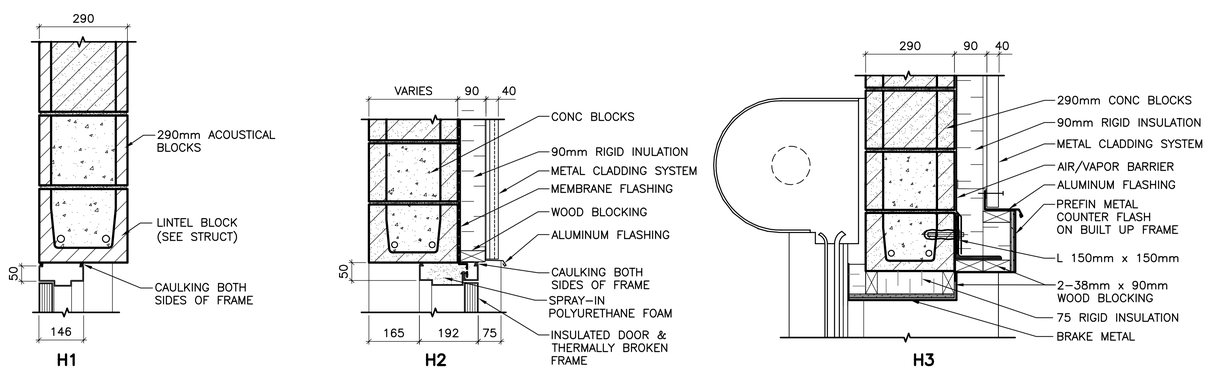

H1 H2 H3

HEAD TYPES
SCALE 1:10

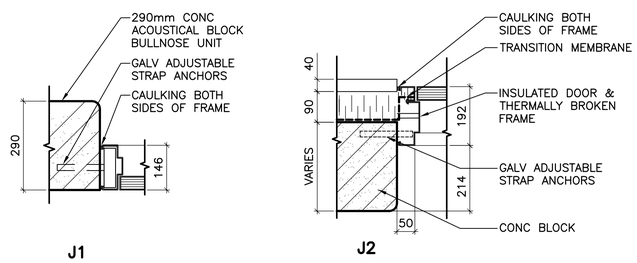

J1 J2 J3

JAMB TYPES
SCALE 1:10

NO.	REVISIONS	DATE	BY
01	498–2006 ADDENDUM 4	06/10/06	LK
00	ISSUED FOR TENDER	06/08/28	AL

B.M. ELEV.

CH2MHILL
Fredericksen Cooper ARCHITECTS
EarthTech A Tyco International Ltd. Company

DESIGNED BY	NC	CHECKED BY	LK
DRAWN BY	AL	APPROVED BY	AHL
SCALE:	AS SHOWN	RELEASED FOR CONSTRUCTION BY:	R. SOROKOWSKI
DATE	2006/06/01	DATE	2006/08/30

ENGINEER'S SEAL
ORIGINAL SIGNED BY
N. COOPER
2006/08/30

CONSULTANT DRAWING NO.
WG–B0501

Winnipeg
THE CITY OF WINNIPEG
WATER AND WASTE DEPARTMENT
ENGINEERING DIVISION

WATER TREATMENT PLANT
STANDBY POWER GENERATOR

CITY FILE NUMBER
SHEET OF

ARCHITECTURAL
ROOM FINISH SCHEDULE, DOOR SCHEDULE & CODE ANALYSIS

CITY DRAWING NUMBER
1–0601G–A–B0501–001–01D

Last Save: 2006–10–06 1:48 PM

L:\WORK\79000\79538\02A–CAD\ALL\SUBMISSION\ADDENDUM\C49 – GENERATOR BUILDING\ADDENDUM 4\DN_WG–B0501_FC BOUND.DWG