BILL OF REINFORCING STEEL

FOR ONE CULVERT

STRAIGHT BARS

MARK	QTY.	LENGTH (mm)	MASS (kg)
1501	197	12000	3711.5
1502	21	9000	296.7
1503	15	13000	306.2
1504	108	6500	1102.1
1505	25	8000	314.0
1506	44	5500	379.9
1507	6	4500	42.4
1508	42	2000	131.9
1509	428	2970	1995.7
1510	2	2770	8.7
1511	24	2630	99.1
1512	2	2500	7.9
1513	2	2360	7.4
1514	2	2220	7.0
1515	2	2090	6.6
1516	2	1950	6.1
1517	2	1820	5.7
1518	2	1680	5.3
1519	2	1540	4.8
1520	2	1410	4.4
1521	2	1270	4.0
1522	2	1140	3.6
1523	12	11000	207.2
1524	880	2270	3136.2
1525	9	1385	19.6
1526	12	10000	188.4
1527	22	3500	120.9
1530	28	3070	135.0
2001	164	12000	4634.6
2002	13	13100	401.1
2003	18	6800	288.3
2004	11	5500	142.5
2005	16	9100	342.9
2006	19	7800	349.0
2007	38	2000	179.0
2008	5	12100	142.5
2009	2	2890	13.6
2010	2	2820	13.3
2011	2	2750	13.0
2012	2	2680	12.6
2013	2	2615	12.3
2014	2	2550	12.0
2015	2	2480	11.7
2016	2	2410	11.4
2017	2	2340	11.0
2018	242	2275	1296.5
2019	2	2210	10.4
2020	2	2140	10.1
2021	2	2075	9.8
2022	2	2005	9.4
2023	2	1935	9.1
2024	242	1870	1065.7
2025	2	1800	8.5
2026	2	1735	8.2
2027	2	1660	7.8
2028	2	1600	7.5
2029	2	1530	7.2
2030	2	1460	6.9
2031	2	1395	6.6
2032	2	1325	6.2
2033	2	1260	5.9
2034	2	1190	5.6
2035	856	2970	5987.2
2036	8	5000	94.2
2037	14	6000	197.8
2038	14	11000	362.7
2048	18	1385	58.7
2057	2	1125	5.3
2058	2	1055	5.0
2059	2	990	4.7
2060	2	920	4.3
2061	2	850	4.0
2062	2	785	3.7
2063	2	715	3.4
2501	4	10000	157.0
TOTAL MASS OF REINFORCING STEEL			**37796.7 kg**

BENT BARS

MARK	QTY.	TYPE	A	B	C	D	E	LENGTH (mm)	MASS (kg)
1001	17	F	470	470	850	170	100	2060	27.5
1002	17	F	770	770	850	170	100	2660	35.5
1003	21	F	470	470	1000	400	100	2440	40.2
1004	21	F	770	700	1000	400	100	3040	50.1
1005	195	B	170	550	550			1270	194.4
1528	428	E	840	550	550			1940	1303.6
1529	101	A	600	1370				1970	312.4
1531	28	D	550	3290				3840	168.8
1532	14	C	850	1450	550			2850	62.6
1533	14	C	850	1810	550			3210	70.6
1534	2	A	600	1490				2090	6.6
1535	2	A	600	1550				2150	6.8
1536	2	A	600	1655				2255	7.1
1537	2	A	600	1765				2365	7.4
1538	2	A	600	1875				2475	7.8
1539	2	A	600	1985				2585	8.1
1540	14	G	1000	1000				2000	44.0
1541	7	H	1000	1000				2000	22.0
1542	7	J	1000	1000	230			2230	24.5
2039	878	A	1500	1100				2600	5376.0
2040	6	A	1035	1100				2135	30.2
2041	6	A	2065	1100				3165	44.7
2042	2	A	1005	1500				2505	11.8
2043	2	A	870	1500				2370	11.2
2044	2	A	735	1500				2235	10.5
2045	2	A	600	1500				2100	9.9
2046	2	A	460	1500				1960	9.2
2047	2	A	325	1500				1825	8.6
2049	198	A	770	1370				2140	997.9
2050	2	A	770	1490				2260	10.6
2051	2	A	770	1550				2320	10.9
2052	2	A	770	1655				2425	11.4
2053	2	A	770	1765				2535	11.9
2054	2	A	770	1875				2645	12.5
2055	2	A	770	1985				2755	13.0
2056	4	K	600	7330	1250			9180	86.5
2064	2	A	770	1600				2370	11.2
2065	2	A	770	1710				2480	11.7
2066	2	A	770	1820				2590	12.2
2067	2	A	770	1930				2700	12.7
2068	101	A	600	1370				1970	468.6
2069	2	A	600	1490				2090	9.8
2070	2	A	600	1550				2150	10.1
2071	2	A	600	1655				2255	10.6
2072	2	A	600	1765				2365	11.1
2073	2	A	600	1875				2475	11.7
2074	2	A	600	1985				2585	12.2
2502	16	D	1100	3450				4550	285.7

BAR TYPES

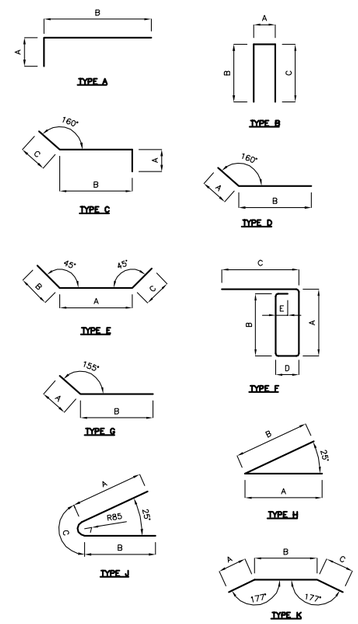

NOTES:

1. ALL DIMENSIONS GIVEN ARE OUT TO OUT, EXCEPT RADI. RADI ARE INSIDE DIMENSIONS.
2. ALL REINFORCING STEEL SHALL BE DEFORMED STEEL UNLESS NOTED OTHERWISE IN THE ABOVE BILL OF REINFORCING STEEL.
3. LIKE BARS SHALL BE BUNDLED, SECURELY TIED AND IDENTIFIED AS TO MARK AND SITE NO. BY APPROPRIATE MEANS. ALL OTHER ITEMS TO BE IDENTIFIED IN A SIMILAR FASHION.

APEGM
Certificate of Authorization
Stantec Consulting Ltd.
No. 1301 Date:

LOCATION APPROVED
UNDERGROUND STRUCTURES

SUPV. U/G STRUCTURES COMMITTEE DATE

NOTE:
LOCATION OF UNDERGROUND STRUCTURES AS SHOWN ARE BASED ON THE BEST INFORMATION AVAILABLE BUT NO GUARANTEE IS GIVEN THAT ALL EXISTING UTILITIES ARE SHOWN OR THAT THE GIVEN LOCATIONS ARE EXACT. CONFIRMATION OF EXISTENCE AND EXACT LOCATION OF ALL SERVICES MUST BE OBTAINED FROM THE INDIVIDUAL UTILITIES BEFORE PROCEEDING WITH CONSTRUCTION.

B.M.
ELEV.

NO.	REVISIONS	DATE	BY
0	ISSUED FOR ADDENDUM No.1	10.01.15	J.M.B.

Stantec Consulting Ltd.
905 Waverley Street, Winnipeg, Manitoba
Tel 204-489-5900 Fax 204-453-9012

DESIGNED BY M.L.T. CHECKED BY K.S.A.
DRAWN BY J.M.B. APPROVED BY M.L.T.
HOR. SCALE: VERTICAL: AS SHOWN
RELEASED FOR CONSTRUCTION:
DATE 09.12.11 DATE

ENGINEER'S SEAL

CONSULTANT DRAWING NO. S-109

Winnipeg
THE CITY OF WINNIPEG
PUBLIC WORKS DEPARTMENT
ENGINEERING DIVISION

GUNN ROAD RECONSTRUCTION
CORDITE DITCH CULVERT REPLACEMENT
AT DAY STREET AND GUNN ROAD
REINFORCING BILL OF MATERIAL

SHEET 15 OF 15
CAD FILE DRAWING NUMBER 05170S-109-726.dwg
CITY DRAWING NUMBER C365-10-15

V:\1137\active\113705710\drawing\K03_addendum\sheet_files\contract_1\05170s-109-726.dwg
2015-01-13 03:03PM By: jbeamonte