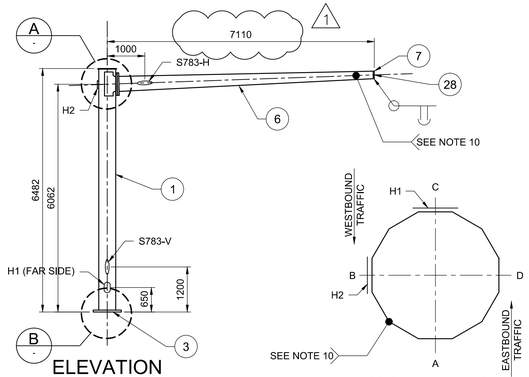

ELEVATION
1:75

ORIENTATION
1:10

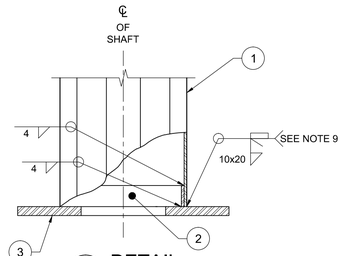

B DETAIL
1:10

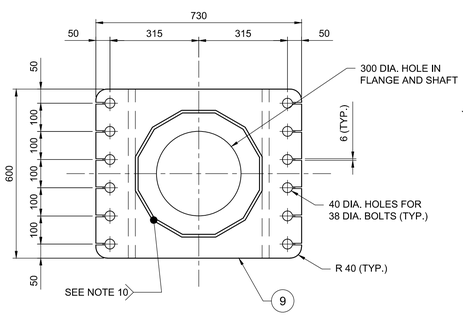

FLANGE PLATE DETAIL
1:10

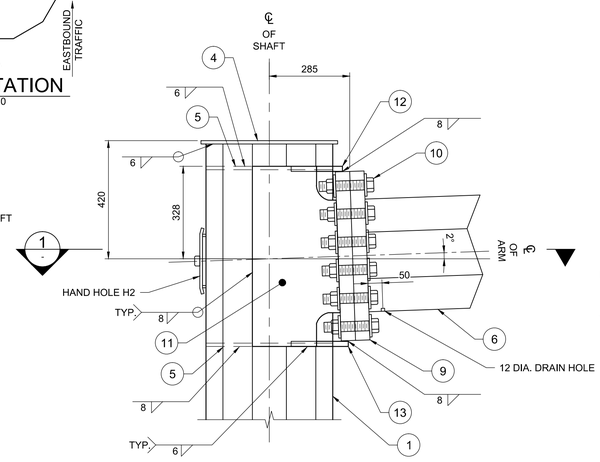

A DETAIL
1:10

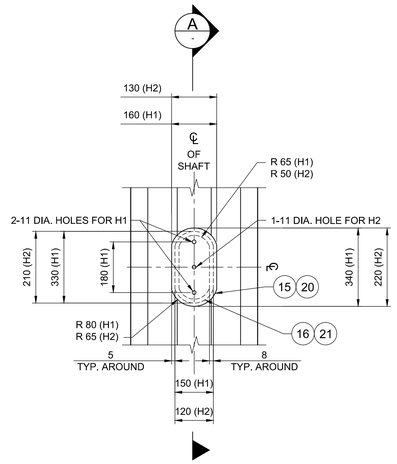

FRONT ELEVATION
1:10

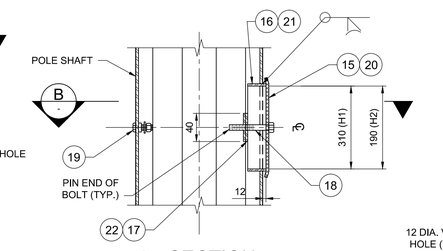

A SECTION
1:10

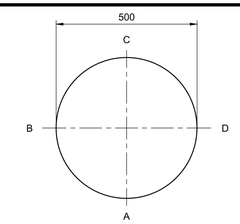

TOP PLATE - MK. 4
1:10

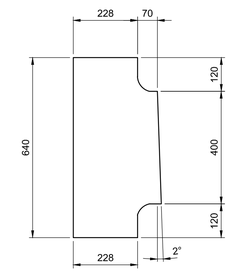

GUSSET PLATE - MK. 11
1:10

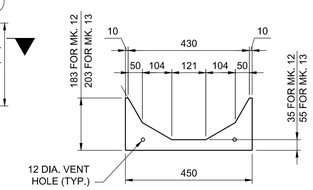

GUSSET PLATE - MK. 12 & 13
1:10

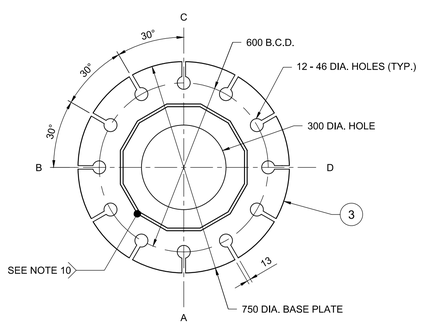

BASE PLATE DETAIL
1:10

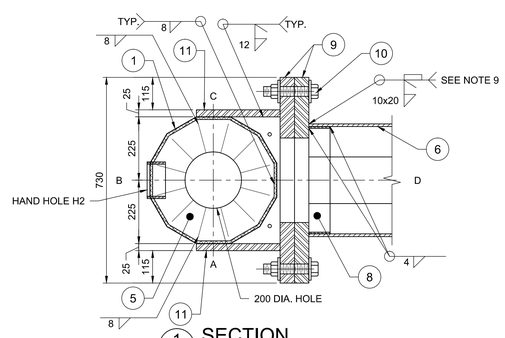

1 SECTION
1:10

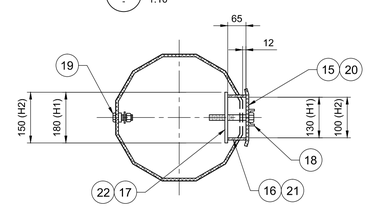

B SECTION
1:10

NOTE: REFER TO ORIENTATION DETAIL FOR LOCATION OF HANDHOLES. WELDED JOINTS TO COMPLETE REINFORCING RING SHALL BE 100% PENETRATION.

HANDHOLE - MK. H1 & H2
1:10

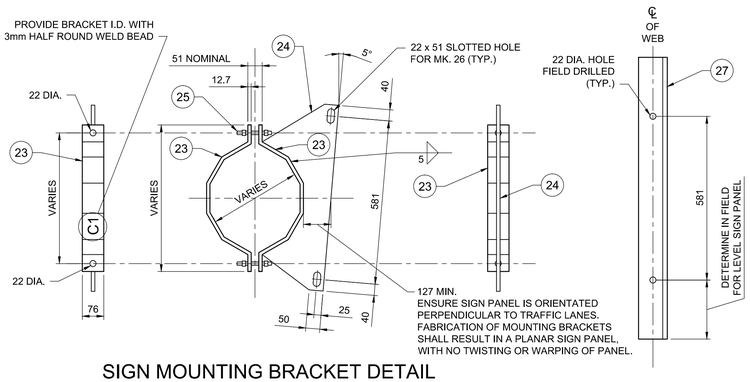

SIGN MOUNTING BRACKET DETAIL
1:10

STRUCTURE IDENTIFICATION NUMBER SIZE
NTS

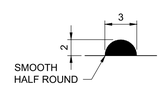

SECTION D-D
NTS

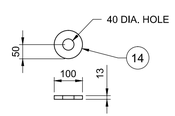

PLATE WASHER DETAIL
1:10

BILL OF MATERIALS

MK.	QTY.	DESCRIPTION
1	1	DODECAGONAL SHAFT 450 A/F x 9.525 THICK PLATE
2	1	BACK-UP STRIP 75 x 4.763
3	1	BASE PLATE 750 DIA. x 51 THICK
4	1	TOP PLATE 500 DIA. x 12 THICK
5	2	DODECAGONAL GUSSET PLATE 12 THICK
6	1	DODECAGONAL ARM 450 A/F TO 200 A/F x 9.525 THICK
7	1	DODECAGONAL END PLATE 200 A/F x 4.763 THICK
8	1	BACK-UP STRIP 75 x 4.763
9	2	FLANGE PLATE 51 THICK
10	12	38 DIA. BOLTS C/W NUT & 2 WASHERS (ASTM A325, TYPE 1, GALV.)
11	2	SIDE GUSSET PLATE 25 THICK
12	1	GUSSET PLATE 19 THICK
13	1	GUSSET PLATE 19 THICK
14	16	PLATE WASHER 13 THICK
		HANDHOLE MARK H1
15	1	COVER PLATE 11 GA. x 160x 340 (ASTM A569)
16	1	REINFORCING RING 8 x 65 x 830
* 17	2	CLAMP BAR 6 x 40 x 180
* 18	2	10 DIA. x 140 BOLT S/S (TYPE 316)
* 19	1	GROUND STUD ASSEMBLY 10 DIA. x 40
		HANDHOLE MARK H2
20	1	COVER PLATE 11 GA. x 130 x 220 (ASTM A569)
21	1	REINFORCING RING 8 x 65 x 555
* 22	1	CLAMP BAR 6 x 40 x 150
* 18	1	10 DIA. x 140 BOLT S/S (TYPE 316)
* 19	1	GROUND STUD ASSEMBLY 10 DIA. x 40
		SIGN MOUNTING BRACKET (4 REQUIRED)
23	2	CLAMP BAR 12 x 76 (LENGTH TO SUIT)
24	1	BRACKET PLATE 12 THICK
25	2	19 DIA. ASTM F1554 GRADE 55 THREADED ROD C/W 2 A563 GRADE A NUTS & F436 WASHER AND LOCK WASHER (ALL GALVANIZED)
26	2	19 DIA. S/S BOLT C/W NUT, 2 WASHERS & 1 LOCK WASHER (ASTM A193 GRADE B8)
27	1	ALUMINUM T-BAR 6061-T6 ASTM B221 102 x 76 x 8 LENGTH TO SUIT SIGN PANEL HEIGHT
28	1	HALF COUPLING (1 ½" NOMINAL) ASTM A105 3000 lb

*NOTES:

1. MARK NO. 17 & 22 C/W 8-DIA. PUNCHED 10 N.C. TAPPED AT THE CENTER OF PLATE.
2. MARK NO. 18 C/W CUP WASHER.
3. MARK NO. 19 C/W 2-10 DIA. HEX NUT, 2-TERMINAL WASHER & 1-LOCKWASHER.

GENERAL NOTES

1. DESIGN DATA
   - AASHTO STANDARD SPECIFICATIONS FOR STRUCTURAL SUPPORTS FOR HIGHWAY SIGNS, LUMINAIRES, AND TRAFFIC SIGNALS, 5TH EDITION, 2009, PLUS INTERIMS.
   - DESIGN WIND LOAD = 1.5 kPa
   - DESIGN ICE LOAD = 0.15 kPa
   - FATIGUE CATEGORY I CONSIDERING NATURAL WIND GUSTS AND TRUCK INDUCED GUSTS. FATIGUE CATEGORY II FOR GALLOPING.
2. ALL PLATE MATERIALS SHALL BE CSA G40.21 - 300W STRUCTURAL STEEL.
3. ALL MATERIALS EXCEPT STAINLESS STEEL AND ALUMINUM SHALL BE HOT-DIP GALVANIZED IN ACCORDANCE WITH ASTM A123 TO A MIN. NET RETENTION OF 610 g/m² UNLESS INDICATED OTHERWISE.
4. ALL AREAS OF DAMAGED GALVANIZING SHALL BE REPAIRED WITH SPRAY-ON COATING CALLED "ZINGA" OR APPROVED EQUIVALENT HAVING A MINIMUM 96% ZINC CONTENT IN THE DRY FILM.
5. ALUMINUM T-BARS & SIGNS
   - CONTRACTOR SHALL SUPPLY AND DELIVER ALUMINUM T-BARS TO THE CITY OF WINNIPEG TRAFFIC SERVICES SIGN SHOP A MINIMUM OF 3 WEEKS IN ADVANCE OF INTENDED DATE FOR PICKUP. CITY WILL INSTALL SIGN PLATES ON SUPPLIED T-BARS.
   - 1 SIGN PANEL, MAXIMUM SIZE 4500 x 2100 mm AS SHOWN ON SHEET 074. SUPPLIED BY THE CITY OF WINNIPEG TRAFFIC SERVICES BRANCH. PICKUP AND INSTALLATION BY THE CONTRACTOR.
   - SIGN PANELS SHALL BE INSTALLED ON THE SIGN SUPPORT STRUCTURE IMMEDIATELY FOLLOWING ERECTION OF THE SUPPORT STRUCTURE (SAME DAY).
6. INSTALL HOLES IN THE GUSSET PLATES FOR DRAINAGE DURING GALVANIZING AS DETAILED.
7. PROVIDE "RAISED" IDENTIFICATION NO. WITH WELDING ELECTRODE FOR THE SIGN STRUCTURE.
8. GRIND ALL SHARP POINTS AND EDGES.
9. EXTERIOR WELD JOINING SHAFT TO TRANSVERSE PLATE SHALL BE AN UNEQUAL LEG COMPLETE PENETRATION WELD WITH THE LONG LEG OF THE WELD ALONG THE SHAFT TERMINATING AT 30° FROM THE SHAFT SURFACE.
10. SEAM WELDS SHALL BE 100% PENETRATION WITHIN 200mm OF BOTH ENDS OF THE VERTICAL AND ARM SHAFTS.

METRIC

WHOLE NUMBERS INDICATE MILLIMETRES
DECIMALIZED NUMBERS INDICATE METRES

WARNING

IF POWER EQUIPMENT OR EXPLOSIVES ARE TO BE USED FOR EXCAVATION ON THIS PROJECT THE CONTRACTOR MUST:

1. NOTIFY THE GAS COMPANY OF THE PROPOSED LOCATION OF EXCAVATION.
2. TAKE PRECAUTION TO AVOID DAMAGE TO GAS COMPANY INSTALLATIONS SEE PROVINCIAL REGULATION 210/72 FOR DETAILS.
3. OBTAIN EXCAVATION PERMITS PRIOR TO CONSTRUCTION.

APEGM
Certificate of Authorization
Dillon Consulting Limited (MB)
No. 1789 Date: 2017/01/09

NO.	REVISIONS	DATE	BY
1	ADDENDUM #6	17/03/13	DA
0	ISSUED FOR TENDER	17/01/09	DA

DILLON CONSULTING

DESIGNED BY	DRA	CHECKED BY	SSR
DRAWN BY	MDG	APPROVED BY	DBW
HOR. SCALE	AS SHOWN	RELEASED FOR CONSTRUCTION	
VERTICAL	AS SHOWN		
DATE		DATE	

ENGINEER'S SEAL
PROVINCE OF MANITOBA
D.R.C. AMORIM
Member
33215
REGISTERED PROFESSIONAL ENGINEER

CONSULTANT PROJECT NUMBER
16-3353

Winnipeg
THE CITY OF WINNIPEG
PUBLIC WORKS DEPARTMENT

WAVERLEY STREET UNDERPASS AT CN MILE 3.89 RIVERS SUB
CONTRACT 2: UNDERPASS STRUCTURE, RAILWORKS, ROADWORKS, LAND DRAINAGE SEWER, PUMPING STATION AND LANDSCAPING WORKS

S783 - FABRICATION DETAILS

CITY DRAWING NUMBER
U-239-2016-C2-CS-075
SHEET 075 OF 085
CONSULTANT DRAWING NUMBER
C2-CS-075

G:\CAD\163353\Technical Workspace\Engineering\Drawings and Figures\Structures\Contract\163353-C2-CON-CS-OHSS-S783.dwg