A1 SIZE – 594mm x 841mm

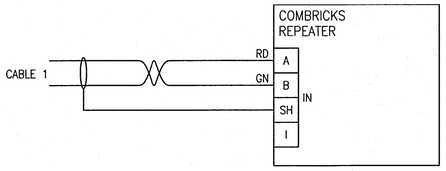

NOTES: TERMINATOR SET TO ON.

A PROFIBUS DP REPEATER CONNECTION
NTS

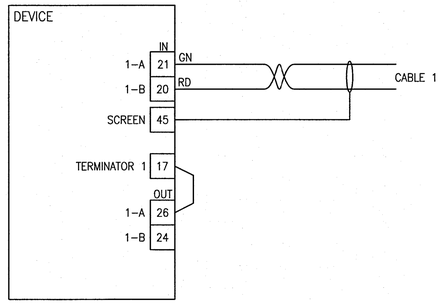

NOTES:
FIT THE INTERNAL LINKS LK1 AND LK2 IN THE TERMINATE POSITION.

B ROTORK IQ/IQT VALVE ACTUATOR
NTS

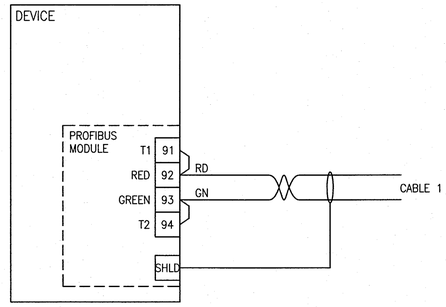

C SIEMENS MAG6000 FLOW METER
NTS

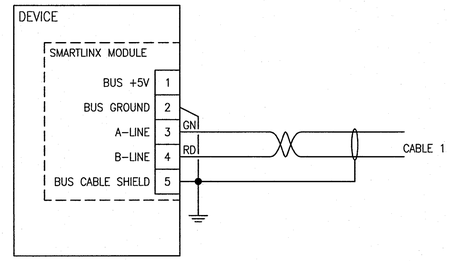

NOTES: TERMINATOR SET TO ON.

D SIEMENS MULTIRANGER 100/200 LEVEL TRANSMITTER
NTS

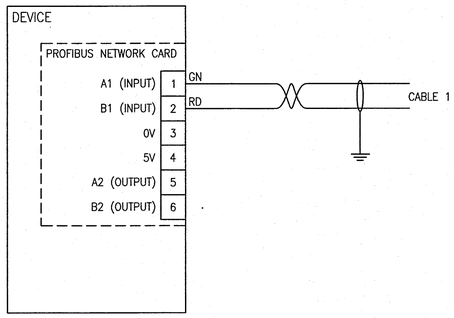

NOTES: TERMINATOR SET TO ON.

E HACH SC200 CONTROLLER
NTS

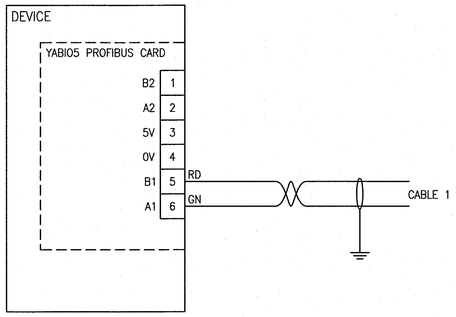

NOTES: TERMINATOR SET TO ON.

F HACH SC1000 CONTROLLER
NTS

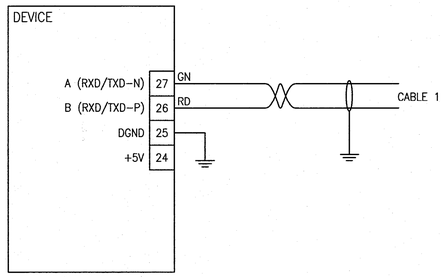

NOTES: TERMINATOR SET TO ON.

G ENDRESS & HAUSER T–MASS 65F, 65I FLOW TRANSMITTER
NTS

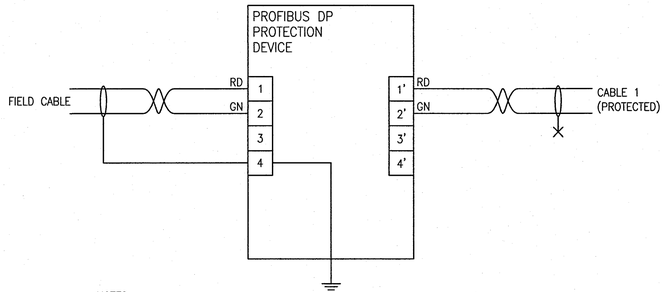

NOTES:
PROTECTOR MODULES ARE GROUNDED THROUGH DIN RAIL. PROTECTOR MODULE PANELS SHALL BE GROUNDED WITH MINIMUM 10 AWG GROUND CONDUCTOR IN CONDUIT.

H DEHN 920 271 PROTECTOR CONNECTION
NTS

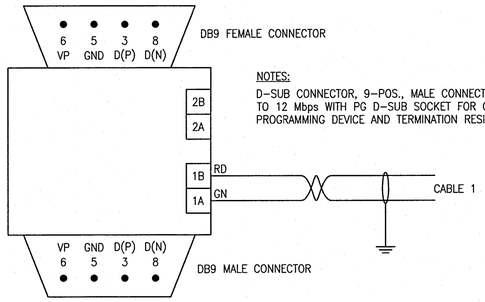

NOTES:
D–SUB CONNECTOR, 9–POS., MALE CONNECTOR, PROFIBUS DP UP TO 12 Mbps WITH PG D–SUB SOCKET FOR CONNECTING A PROGRAMMING DEVICE AND TERMINATION RESISTOR.

NOTES: TERMINATOR SET TO ON.

I PHOENIX CONTACT D–SUB BUS CONNECTOR
NTS

GENERAL NOTES:

1. PROVIDE WIRE BARREL FERRULES FOR ALL CONNECTIONS TO TERMINALS.
2. CONTRACTOR TO VERIFY CONNECTION DETAILS AND INSTRUMENT TYPICAL ASSIGNMENT BEFORE COMMENCING WORK.

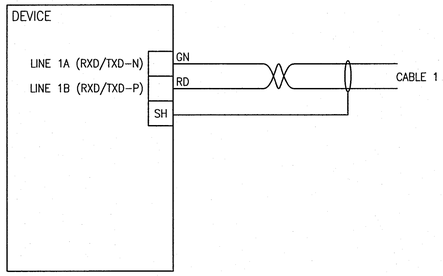

NOTES: TERMINATOR SET TO ON.

X TYPICAL PROFIBUS DP DEVICE CONNECTION
NTS

REFERENCE DRAWINGS	DESCRIPTION
–	–

APEGM Certificate of Authorization
SNC-Lavalin Inc.
No. 4489

NO.	REVISIONS	DATE	DESIGN	CHECK
00	ISSUED FOR CONSTRUCTION – 976–2016	2017/04/05	MW	PC

CH2MHILL. SNC·LAVALIN KGS GROUP

DESIGNED BY: M. WANG	CHECKED BY: P. CHICATUN
DRAWN BY: MJ. PERSSON	APPROVED BY: E. RYCZKOWSKI
SCALE: NTS	ISSUED FOR CONSTRUCTION BY: J. SHUMKA
DATE: 2015/10/09	DATE: 2017/04/05
CONSULTANT NO.: 474248	

ENGINEER'S SEAL
PROVINCE OF MANITOBA
CHICATUN
Member
30307
REGISTERED PROFESSIONAL ENGINEER
APR. 4 2017
REV. 00

Winnipeg
THE CITY OF WINNIPEG
WATER AND WASTE DEPARTMENT

SOUTH END WATER POLLUTION CONTROL CENTRE
SEWPCC UPGRADING/EXPANSION PROJECT
AUTOMATION

PROFIBUS DP WIRING DETAILS

CITY DRAWING NUMBER	SHEET	REV.	SIZE
1–0102–ADTL–A020	001	00	A1

PLOT DATE: Apr 03, 2017 – 8:52am
FILE NAME: 1–0102–ADTL–A020.dwg

LAST SAVE: 2017/04/03 – 8:52am
PATH: C:\pw_workdir\ch2mhill_wbg\ve006717\d0355981\1–0102–ADTL–A020.dwg