A1 SIZE – 594mm x 841mm

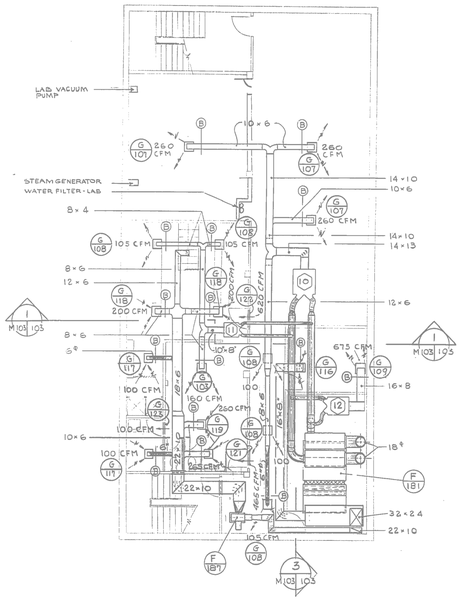

BASEMENT FLOOR PLAN ELEV 756'-8"

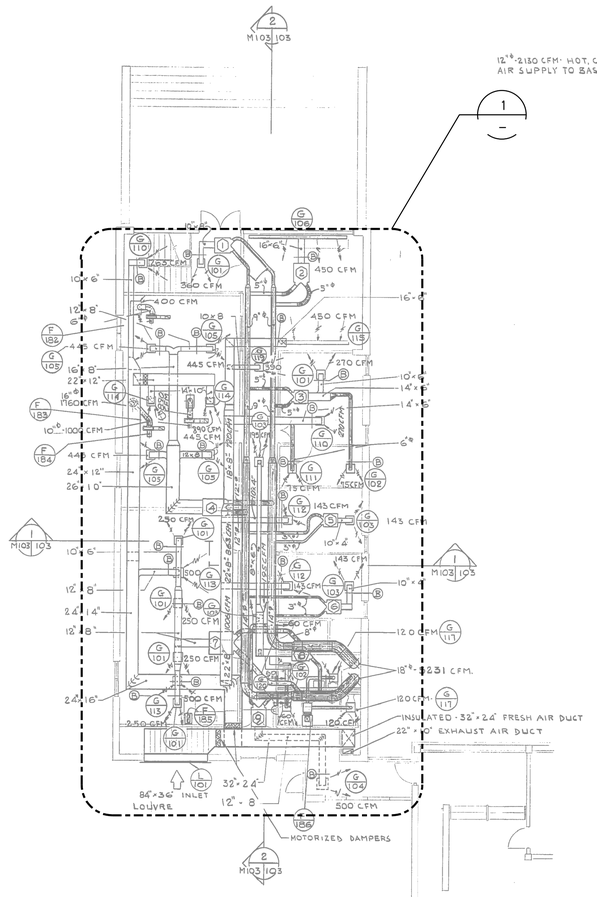

GROUND FLOOR PLAN ELEV-768'-8"

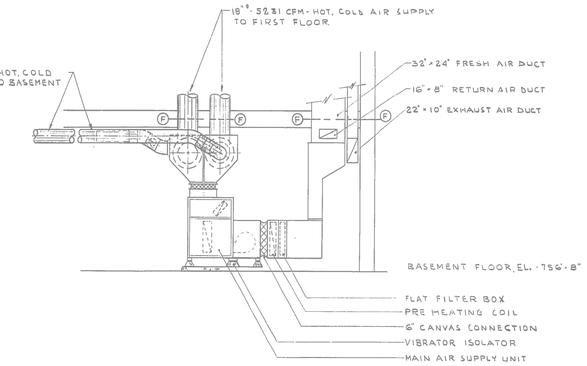

3 SECTION
M103 | 103

VENTILATION SYMBOLS

- FIRE DAMPER
- MOTORIZED DAMPER
- BALANCE DAMPER
- SPLITTER DAMPER
- CANVAS CONNECTION
- TURNING VANES
- ROUND DUCT–HIGH VELOCITY
- FLAT-OVAL DUCT–HIGH VELOCITY
- TERMINAL UNIT number(example)
- FLEXIBLE DUCT
- DISCHARGE RISER
- SUCTION RISER
- outlet CFM(example) DIFFUSER AIR PATTERN
- SIDEWALL OR DOOR GRILLE
- HEATING COIL NUMBER
- GRILLE NUMBER
- FAN NUMBER

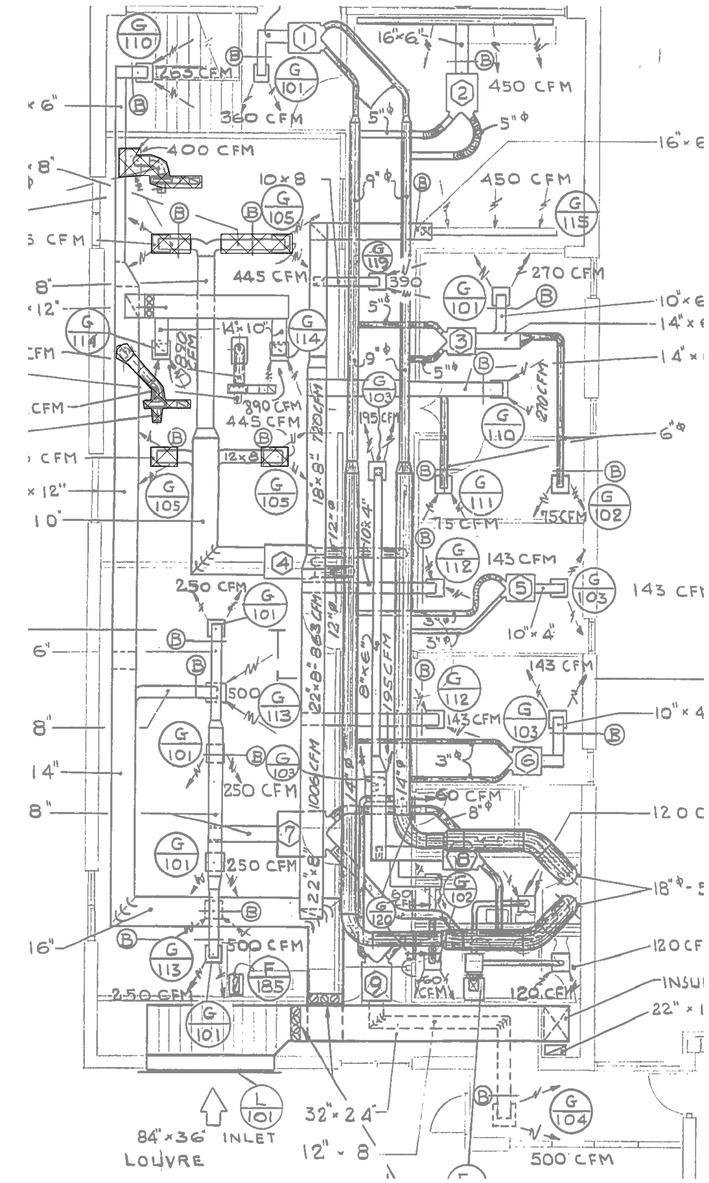

1 DETAIL
NTS

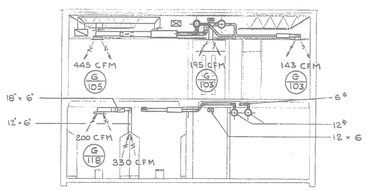

1 SECTION
M 103 | 103

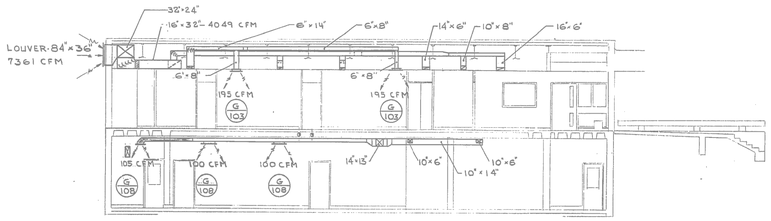

2 SECTION
M103 | 103

NOTES:

1. FOR EQUIPMENT SCHEDULE SEE SPECIFICATION
2. ALL DUCT WORK SHOWN ON GROUND FLOOR PLAN SHALL RUN IN CEILING SPACE UNLESS OTHERWISE NOTED. ALL DUCTWORK SHOWN ON BASEMENT PLAN TO BE RUN AT BASEMENT CEILING UNLESS OTHERWISE NOTED. DUCT TO BE CONCEALED IN FINISHED AREAS AS NOTED ON ARCHITECTURAL DRAWINGS
3. CONTRACTOR TO CONNECT ZONE THERMOSTATES TO CORRESPONDING ZONE CONTROL DAMPERS AND MOTORIZED VALVES.
4. FIRE DAMPERS TO BE INSTALLED IN EACH DUCT PIERCING A FIRE SEPERATION AND WHERE REQUIRED BY FIRE MARSHAL OR LOCAL CODES
5. ALL PLENUMS, BALANCE DAMPERS, FIRE DAMPERS, EQUIPMENT LOCATED IN DUCTWORK, ETC. TO BE PROVIDED WITH ACCESS DOORS. DUCT WORK TO BE INSULATED AS SPECIFIED AND NOTED
6. BALANCE DAMPERS TO BE INSTALLED IN EACH SUPPLY, EXHAUST AND RETURN DUCT BRANCH. PROVIDE ACCESS PANEL TO EACH CONCEALED BALANCE DAMPER
7. SEE "AIR BALANCE SHEET 15-F-G-600-1A"

LEGEND:

INDICATES DEMOLITION WORK

PLANS AND SECTIONS
NTS

NOTES:

1. REMOVE ALL EXISTING LABORATORY RELATED EXHAUST FANS AND ASSOCIATED DUCTWORK. CAP OFF ALL GRAVITY VENT DUCTS AT APPROXIMATELY 300mm BELOW UNDER SIDE OF ROOF. PROVIDE INSULATION FOR THE REMAINING DUCT TO PREVENT CONDENSATION.
2. REFER TO DRAWINGS 1–0102–MGAD–M601 FOR NEW WORK. REMOVE ALL EXISTING HVAC EQUIPMENT IN THE EXISTING LABORATORY WHICH ARE NOT RELATED TO THE NEW WORK.
3. REFER TO GENERAL DEMOLITION NOTES DRAWING 1–0102–DAAA–AD01.
4. ABESTOS CONTAINING MATERIALS MIGHT BE PRESENT IN EXISTING EQUIPMENT AND INSULATION. REFER TO SPECIFICATION SECTIONS 01 35 29, 02 82 11, 02 82 11 12, AND 02 82 13 FOR DETAILS.

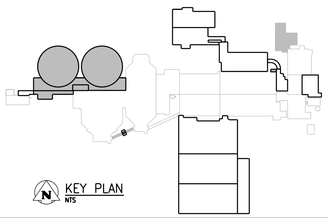

KEY PLAN
NTS

APEGM
Certificate of Authorization
CH2M HILL Canada Ltd.
No. 1441

NO.	REVISIONS	DATE	DESIGN	CHECK
00	ISSUED FOR CONSTRUCTION – 976–2016	2017/04/05	J.C.	J.C.

CH2MHILL. SNC·LAVALIN KGS GROU

DESIGNED BY: T. TRAN	CHECKED BY: D. CUDDINGTON
DRAWN BY: K. FONG	APPROVED BY: H.T. FREIHAMMER
SCALE: NTS	ISSUED FOR CONSTRUCTION BY: J. SHUMKA
DATE: 2017/04/05	DATE: 2017/04/05
CONSULTANT NO.: 474248	

ENGINEER'S SEAL
PROVINCE OF MANITOBA
T.T. TRAN
Member 40578
REGISTERED PROFESSIONAL ENGINEER
Apr 13/17

SEALING ARCHITECT OR ENGINEER ACCEPTS RESPONSIBILITY ONLY FOR AREAS IDENTIFIED BY CLOUDING ON THIS DRAWING.

NOTE: THIS DRAWING SUPERSEDES DRAWING SEP–18

Winnipeg
THE CITY OF WINNIPEG
WATER AND WASTE DEPARTMENT

SOUTH END WATER POLLUTION CONTROL CENTRE
SEWPCC UPGRADING/EXPANSION PROJECT
MECHANICAL
ADMINISTRATION BUILDING
LAB – DEMOLITION

DRAWING NUMBER	SHEET	REV.	SIZE
1–0102–MGAD–MD52	001	00	A1

PLOT DATE: 2017\04\02

FILE NAME: C:\W1\SO-1A\8gr-MD52.dgn

©CH2M HILL 2017. ALL RIGHTS RESERVED.