A1 SIZE – 594mm x 841mm

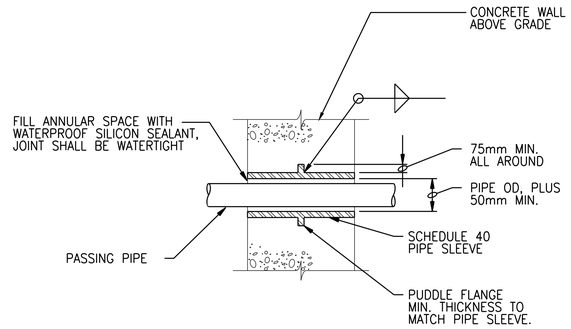

NOTES:

1. ALL DIMENSIONS IN MILLIMETERS, UNLESS OTHERWISE NOTED.
2. DO NOT USE WHERE SUBJECT TO HYDROSTATIC PRESSURE. PAINT ENTIRE SLEEVE AND PUDDLE FLANGE AS SPECIFIED, PRIOR TO CONCRETE PLACEMENT.
3. ALL PIPE SUPPORT COMPONENTS SHALL BE DESIGNED AND FABRICATED FROM STAINLESS STEEL MATERIAL, UNLESS NOTED OTHERWISE.
4. SEE ALSO ARCHITECTURAL DRAWINGS
5. USE STAINLESS STEEL 316L PIPE SLEEVE FOR STAINLESS STEEL PIPES.
6. USE CARBON STEEL EPOXY COATED FOR ALL OTHERS PIPE MATERIALS.
7. REFER TO ARCHITECTURAL DETAILS FOR PENETRATION OF FINISHED WALL.

PIPE SLEEVE THRU EXTERIOR CONCRETE WALLS ABOVE GRADE

NTS

4027-604

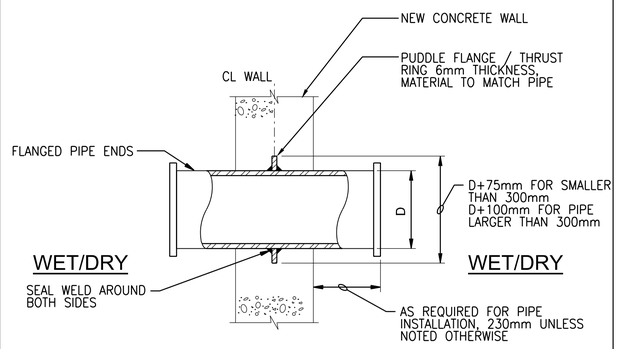

NOTES:

1. ALL DIMENSIONS IN MILLIMETERS, UNLESS OTHERWISE NOTED.
2. PROVIDE WATER TIGHT JOINT AS PERFORMANCE REQUIREMENT.

PIPE PENETRATION THROUGH NEW WALL OR SLAB

NTS

4027-605

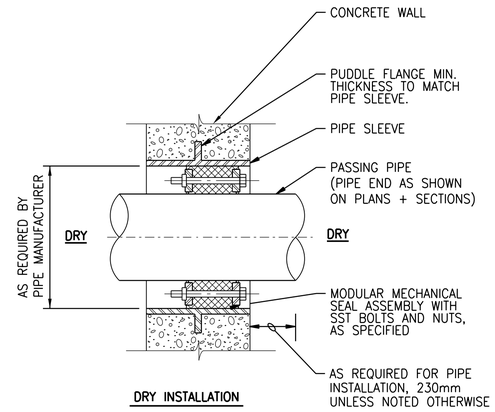

NOTES:

1. ALL DIMENSIONS IN MILLIMETERS, UNLESS OTHERWISE NOTED.
2. COAT FLOOR SLEEVE WITH SPECIFIED PAINT SYSTEM PRIOR TO CONCRETE PLACEMENT.
3. ALL PIPE SUPPORT COMPONENTS SHALL BE DESIGNED FABRICATED FROM STAINLESS STEEL MATERIAL, UNLESS NOTED OTHERWISE.
4. SEE NOTE 3 DETAIL 4027-607B

INTERIOR WALL PENETRATION SEAL

NTS

4027-607A

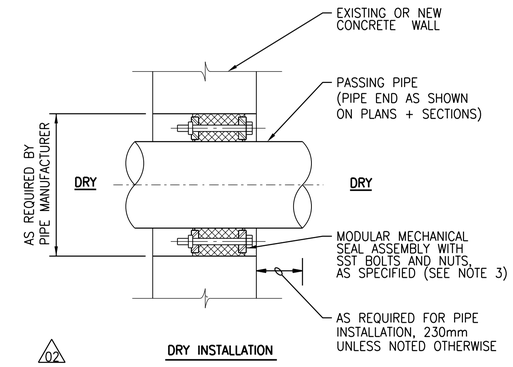

NOTES:

1. ALL DIMENSIONS IN MILLIMETERS, UNLESS OTHERWISE NOTED.
2. ALL PIPE SUPPORT COMPONENTS SHALL BE DESIGNED AND FABRICATED FROM STAINLESS STEEL MATERIAL, UNLESS NOTED OTHERWISE.
3. FILL VOID WITH INSULATION AND SEAL PERIMETER OF OPENING. PROVIDE ULC LISTED ASSEMBLY FOR ALL PENETRATIONS THROUGH WALLS DESIGNATED TO HAVE FIRE RESISTANT RATING.

INTERIOR WALL PENETRATION SEAL

NTS

4027-607B

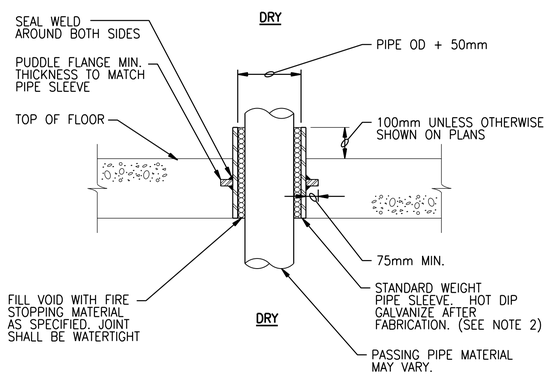

NOTES:

1. ALL DIMENSIONS IN MILLIMETERS, UNLESS OTHERWISE NOTED.
2. COAT FLOOR SLEEVE WITH SPECIFIED PAINT SYSTEM PRIOR TO CONCRETE PLACEMENT.
3. ALL PIPE SUPPORT COMPONENTS SHALL BE DESIGNED FABRICATED FROM STAINLESS STEEL MATERIAL, UNLESS NOTED OTHERWISE.
4. SEE NOTE 3 DETAIL 4027-607B

FLOOR SLEEVE (DRY)

NTS

4027-620

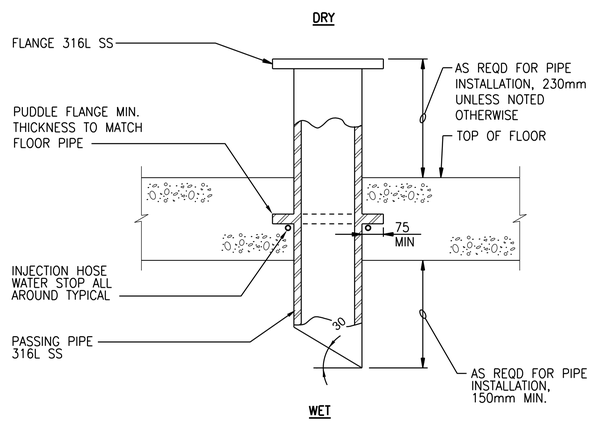

NOTES:

1. ALL DIMENSIONS IN MILLIMETERS, UNLESS OTHERWISE NOTED.
2. ALL PIPE SUPPORT COMPONENTS SHALL BE DESIGNED FABRICATED FROM STAINLESS STEEL MATERIAL, UNLESS NOTED OTHERWISE.
3. PROVIDE WATER TIGHT JOINT AS PERFORMANCE REQUIREMENT
4. SEE ALSO INSTRUMENTATION DRAWINGS

LEVEL INSTRUMENT FLOOR PIPE

NTS

4027-622

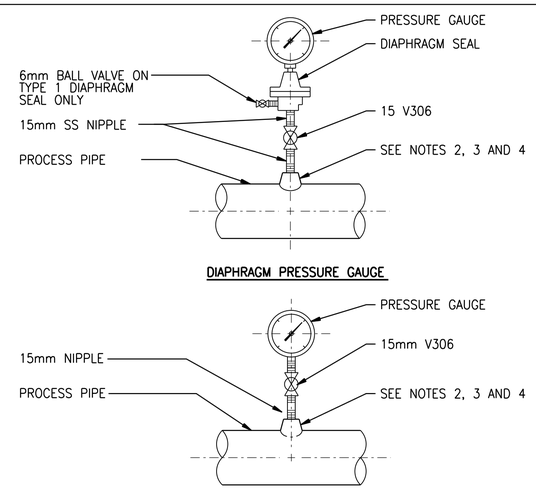

NOTES:

1. ALL DIMENSIONS IN MILLIMETERS, UNLESS OTHERWISE NOTED.
2. FOR STEEL, GALVANISED STEEL, AND PVC 65mm AND SMALLER USE A BUSHING IN A TEE.
3. FOR DUCTILE IRON AND FIBERGLASS REINFORCED PLASTIC PIPE, ALL SIZES, USE PIPE SADDLE WITH BUSHING.
4. FOR STEEL AND STAINLESS STEEL PIPES 80mm AND LARGER, AND PRESSURE VESSELS, USE THRED-O-LET AS SHOWN.
5. PROVIDE SNUBBER FOR POSITIVE DISPLACEMENT PUMP INSTALLATIONS

PRESSURE GAUGE MOUNTING

NTS

4027-690

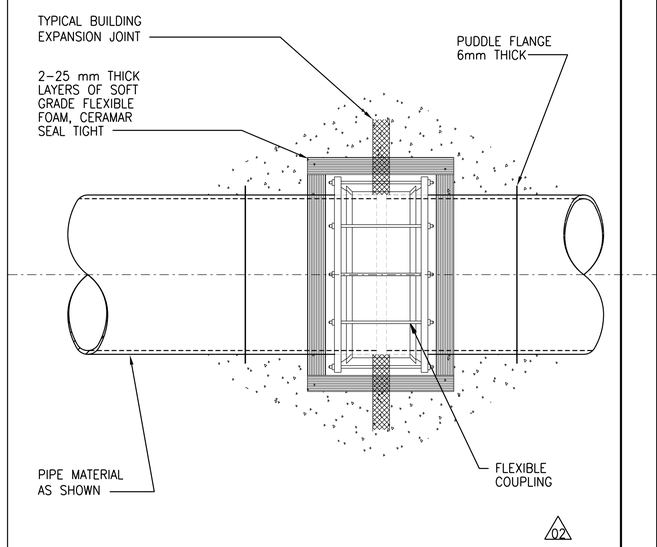

PIPE EXPANSION JOINT POURED IN PLACE WITH BUIDING SLAB

NTS

4027-623

APEGM
Certificate of Authorization
CH2M HILL Canada Ltd.
No. 1441

NO.	REVISIONS	DATE	DESIGN	CHECK
04	ISSUED FOR CONSTRUCTION – 976-2016	2017/04/05	B.C.	J.C.
03	ISSUED FOR CONSTR – B.O. 899-2015	04/2016	B.C.	J.C.
02	ISSUED FOR TENDER – B.O. 899-2015	01/2016	B.C.	J.C.
01	ISSUED FOR CONSTRUCTION	10/2015	B.C.	J.C.
00	ISSUED FOR TENDER	08/2015	B.C.	J.C.

CH2MHILL. KGS GROUP SNC·LAVALIN

DESIGNED BY: F. ABSI
CHECKED BY: B. EDGAR
DRAWN BY: B. COOPER
APPROVED BY: H.T. FREIHAMMER
SCALE: NTS
ISSUED FOR CONSTRUCTION BY: J. SHUMKA
DATE: 2017/04/05
DATE: 2017/04/05
CONSULTANT NO.: 474248

ENGINEER'S SEAL
PROVINCE OF MANITOBA
April 5, 2017
F. J. ABSI
Member 36875
REGISTERED PROFESSIONAL ENGINEER

Winnipeg
THE CITY OF WINNIPEG
WATER AND WASTE DEPARTMENT

SOUTH END WATER POLLUTION CONTROL CENTRE
SEWPCC UPGRADING/EXPANSION PROJECT
PROCESS
STANDARD DETAILS (3)

CITY DRAWING NUMBER	SHEET	REV.	SIZE
1-0102-PDTL-A004		04	A1

PLOT DATE: 2017\03\29
FILE NAME: 1-0102-PDTL-A004.dgn

©CH2M HILL 2017. ALL RIGHTS RESERVED.