A1 SIZE – 594mm x 841mm

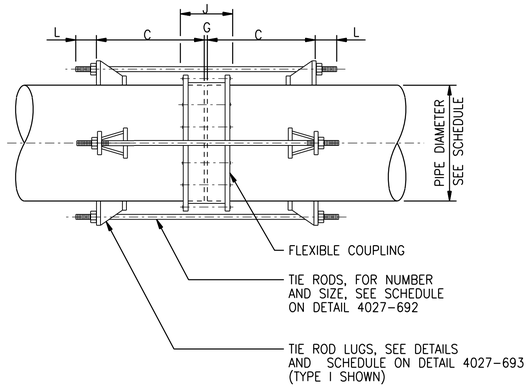

NOTES:

1. ALL DIMENSIONS IN MILLIMETERS, UNLESS OTHERWISE NOTED.
2. THE MIDDLE RING LENGTH OF THE FLEXIBLE COUPLING TO BE AS SPECIFIED.
3. THE CONTRACTOR SHALL DETERMINE THE LENGTH "J" (COUPLING BOLT LENGTH) FROM MANUFACTURER'S CATALOGS USING THE SPECIFIED MIDDLE RING LENGTH.
4. "G" = MANUFACTURER'S RECOMMENDED SPACE BETWEEN ENDS OF PIPE.
5. "C" = J+Z+25mm, (ROUND THIS VALUE UP TO NEXT EVEN INCH), MINIMUM. (FOR Z DIMENSIONS, SEE LUG SCHEDULE.)
6. TIE ROD LENGTH = 2L+2C+G.

SPECIAL THRUST TIE FOR SST PIPE – ASSEMBLIES (4027-691)

NTS

* SEE NOTES — TIE ROD SCHEDULE

TEST PRESSURE		170 kPa TIE RODS		340 kPa TIE RODS		690 kPa TIE RODS		1035 kPa TIE RODS		1550 kPa TIE RODS		2585 kPa TIE RODS	
PIPE DIA (mm)	MIN PIPE WALL THKS (mm)*	DIA (mm)	NO. REQD	DIA (mm)	NO. REQD	DIA (mm)	NO. REQD	DIA (mm)	NO. REQD	DIA (mm)	NO. REQD	DIA (mm)	NO. REQD
150	4.8	—	—	—	—	16	2	16	2	16	2	16	2
200	4.8	—	—	—	—	16	2	16	2	16	2	20	2
250	4.8	—	—	—	—	16	2	16	2	20	2	22	2
300	4.8	16	2	16	2	16	2	16	2	20	2	22	4
350	4.8	16	2	16	2	20	2	20	2	20	4	25	4
400	4.8	16	2	16	2	20	2	22	2	22	4	25	4
450	6.4	16	2	16	2	22	2	25	2	25	4	32	4
500	6.4	16	2	20	2	22	2	22	4	25	4	32	4
550	6.4	16	2	20	2	20	4	22	4	25	4	38	4
600	6.4	16	2	20	2	22	4	25	4	25	6	38	6
750	6.4	16	4	20	4	22	6	25	6	25	8	38	8
900	6.4	20	4	22	4	25	6	25	8	32	8	38	10
1050	6.4	20	4	25	4	25	8	32	8	38	8	44	10
1200	7.9	22	4	22	8	25	10	32	10	38	10	44	12
1350	7.9	20	6	22	8	25	12	32	12	38	12	44	14
1500	8.7	22	6	25	8	32	10	32	14	38	14	44	16
1800	9.5	22	8	25	10	32	12	38	14	44	14	51	18
1950	10.3	22	8	25	12	32	14	38	16	44	16	51	20
2100	11.1	22	10	32	10	38	14	44	14	44	18	51	22
2400	11.1	25	10	32	12	38	16	44	16	51	16	—	—
2700	12.7	25	12	32	12	44	12	51	14	51	22	—	—
3000	15.9	32	8	38	10	44	16	51	18	—	—	—	—
3300	18.3	32	6	44	10	44	18	51	22	—	—	—	—

NOTES:

1. ALL DIMENSIONS IN MILLIMETERS, UNLESS OTHERWISE NOTED.
2. TIE RODS TO BE CONFORMED TO ASTM A193 GRADE B7.
3. NUTS TO BE CONFORMED TO ASTM A194 GRADE 2H.
4. TIE ROD NUTS TO BE TIGHTENED GRADUALLY AND EQUALLY IN STAGES TO PREVENT UNEVEN ALIGNMENT AND TO ALLOW EQUAL STRESS ON ALL TIE RODS UNDER PRESSURE. TIGHTEN UNTIL SNUG. THREADS TO BE PROTRUDED FROM NUTS. PEEN THREADS AFTER TIGHTENING NUTS.
5. CATHODIC PROTECTION FOR FLEXIBLE COUPLINGS REQUIRED WHERE NOTED ON DWGS OR IN THE SPECIFICATIONS.
6. CONTRACTOR USE DATA FOR ONLY THOSE PIPE SIZES AND TEST PRESSURES SPECIFIED IN THIS CONTRACT.
7. TIE RODS NOT ALLOW ATTACHED TO A PIPE WHEN THE WALL THICKNESS IS LESS THAN THE MINIMUM SHOWN ON THE TIE ROD SCHEDULE.
8. THE MINIMUM PIPE WALL THICKNESSES SHOWN ARE TO ENSURE PROPER PERFORMANCE OF THE THRUST TIE LUG. PIPE WALL THICKNESSES GREATER THAN SHOWN IN THE TABLE IS REQUIRED AND SHOWN ELSEWHERE OR SPECIFIED ELSEWHERE TO RESIST INTERNAL PRESSURES.

SPECIAL THRUST TIE FOR SST PIPE TIE ROD SCHEDULE (4027-692)

NTS

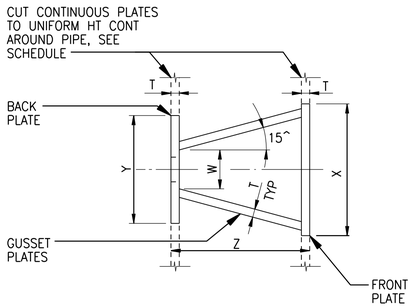

PLAN

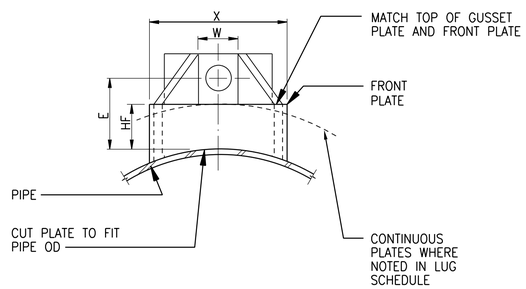

FRONT ELEVATION

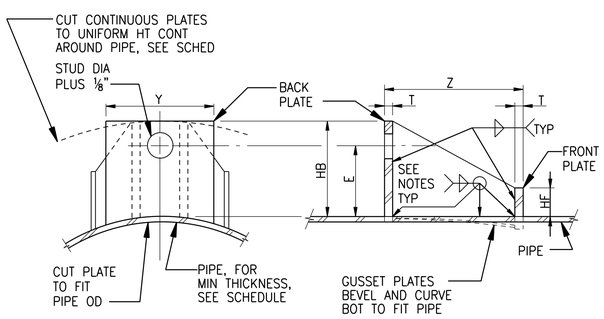

BACK ELEVATION

SECTION

LUG SCHEDULE										
STUD DIA	LUG TYPE	T	W	X	Y	Z	HB	E	HF	L
16	I	10	35	103	114	82	98	76	44	76
19	I	10	38	127	114	127	105	80	44	76
22	I	12	41	140	114	130	108	80	44	100
25	II	12	44	145	Cont	150	112	83	50	100
32	II	16	50	184	Cont	194	127	83	50	100
38	II	19	57	229	Cont	257	140	98	50	100
44	III	25	63	Cont	Cont	302	150	100	57	100
50	III	25	70	Cont	Cont	352	157	106	57	100

NOTE: ALL LUGS TO BE FABRICATED IN 316 STAINLESS STEEL

TIE ROD LUG (4027-693)

NTS

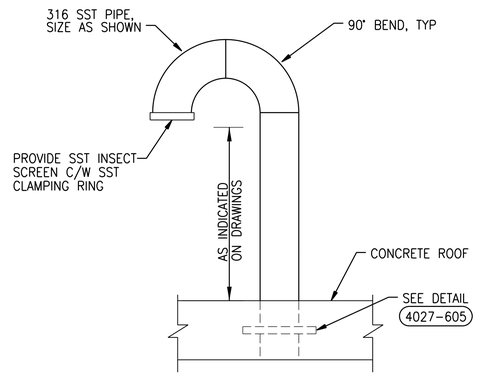

VENT (4027-961)

NTS

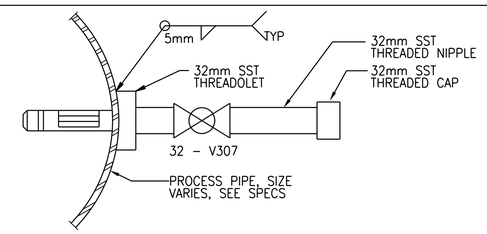

CONNECTION FOR PORTABLE INSERTION AIR FLOW METER

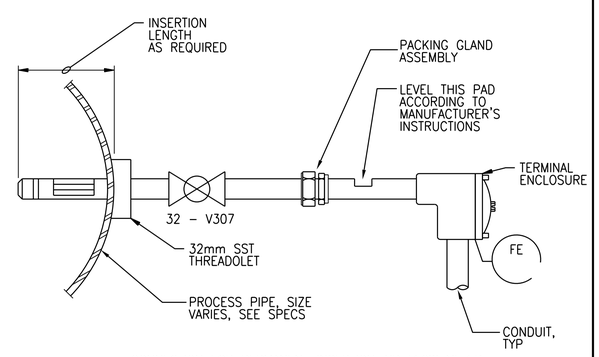

CONNECTION FOR PERMANENT INSERTION AIR FLOW METER

INSERTION AIR FLOW METER (4027-217)

NTS

APEGM
Certificate of Authorization
CH2M HILL Canada Ltd.
No. 1441

NO.	REVISIONS	DATE	DESIGN	CHECK
00	ISSUED FOR CONSTRUCTION – 976-2016	2017/04/05	B.C.	J.C.

CH2MHILL. SNC·LAVALIN KGS GROUP

DESIGNED BY: F. ABSI
CHECKED BY: B. EDGAR
DRAWN BY: B. COOPER
APPROVED BY: H.T. FREIHAMMER
SCALE: NTS
ISSUED FOR CONSTRUCTION BY: J. SHUMKA DATE: 2017/04/05
DATE: 2017/04/05
CONSULTANT NO.: 474248

ENGINEER'S SEAL
PROVINCE OF MANITOBA — REGISTERED PROFESSIONAL ENGINEER — F. J. ABSI Member 36875 — April 5, 2017

Winnipeg
THE CITY OF WINNIPEG
WATER AND WASTE DEPARTMENT

SOUTH END WATER POLLUTION CONTROL CENTRE
SEWPCC UPGRADING/EXPANSION PROJECT
PROCESS
STANDARD DETAILS (4)

CITY DRAWING NUMBER	SHEET	REV.	SIZE
1-0102-PDTL-A005		00	A1

PLOT DATE: 2017\03\29
FILE NAME: 1-0102-PDTL-A005.dgn

©CH2M HILL 2017. ALL RIGHTS RESERVED.