A1 SIZE – 594mm x 841mm

1. INSULATION GUARD WHERE REQUIRED
2. MANUAL DAMPER WITH LOCKING QUADRANT
3. SPIN-IN DUCT FITTING

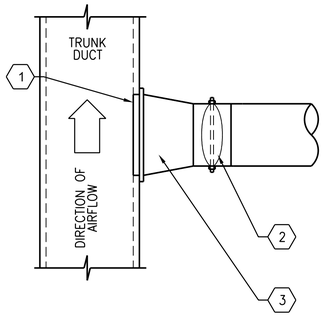

ROUND DUCT SPIN-IN TAKEOFF
NTS

2331-111

1. 25MM INSULATION GUARD WHERE REQUIRED FOR INTERNALLY LINED DUCTWORK.
2. MANUAL DAMPER W/ LOCKING QUADRANT
3. CLOSE OPENINGS AT CORNERS

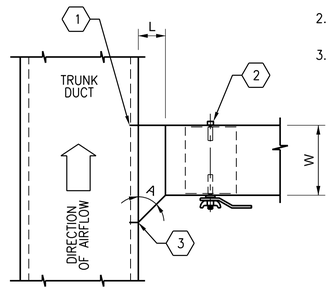

L = 1/4 W, 100MM MINIMUM
A = 45°

RECTANGULAR DUCT TAKEOFF
NTS

2331-112

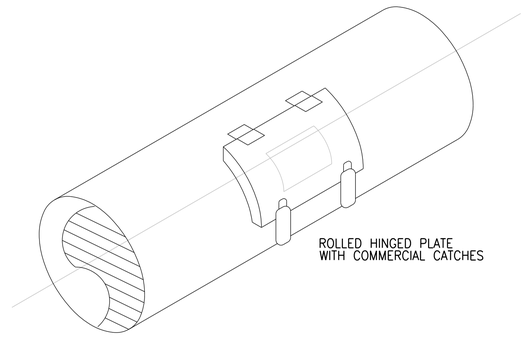

ACCESS DOOR – ROUND DUCT
NTS

2331-901

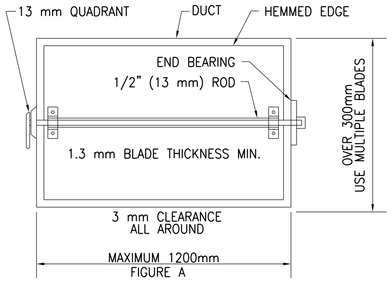

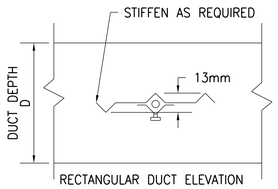

FIGURE A
SIDE ELEVATION

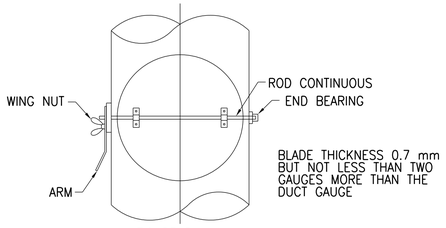

FIGURE B
ROUND DAMPER

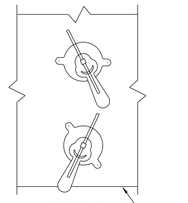

FIGURE C
ELEVATION
TWO BLADE ARRANGEMENT

BALANCING DAMPER DETAIL
NTS

2331-902

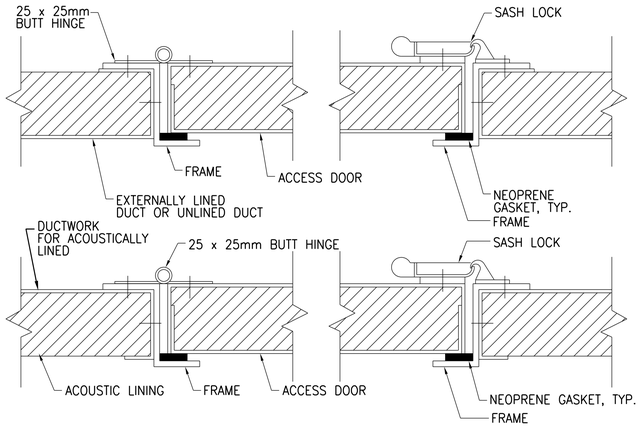

STATIC PRESSURE RATING	DOOR SIZE	HINGE QTY.	LOCK QTY.	METAL GAUGE		
				FRAME	DOOR	BACK
500 Pa & LESS	300 x 300 400 x 500 600 x 600	2 2 3	1-S 2-S 2-S	24 22 22	26 24 22	26 26 26
UP TO 750 Pa	300 x 300 400 x 500 600 x 600	2 2 3	1-S 1-S,1-T,1-B 2-S,1-T,1-B	22 20 20	22 20 20	26 26 24
1000 Pa to 2500 Pa	300 x 300 400 x 500 600 x 600	2 3 3	1-S,1-T,1-B 2-S,1-T,1-B 2-S,2-T,2-B	20 20 18	20 18 18	26 24 24
S: SIDE OPPOSITE HINGE, T: TOP, B: BOTTOM						

DUCT ACCESS DOOR DETAILS
NTS

2331-903

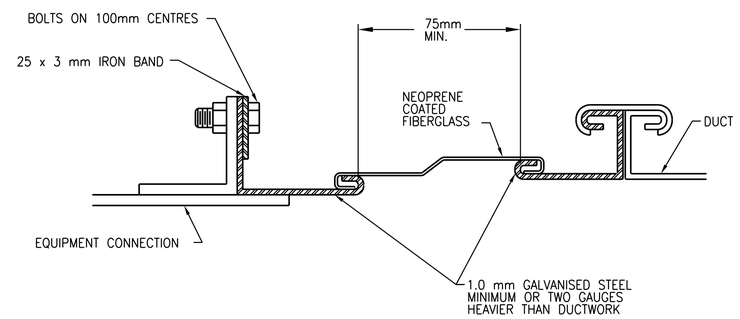

FLEXIBLE DUCT FAN CONNECTION DETAIL
NTS

2331-904

APEGM
Certificate of Authorization
CH2M HILL Canada Ltd.
No. 1441

NO.	REVISIONS	DATE	DESIGN	CHECK
00	ISSUED FOR CONSTRUCTION – 976-2016	2017/04/05	K.F.	J.C.

CH2MHILL. SNC·LAVALIN KGS GROUP

DESIGNED BY: S. BEGG	CHECKED BY: T. TRAN
DRAWN BY: K. FONG	APPROVED BY: H.T. FREIHAMMER
SCALE: NTS	ISSUED FOR CONSTRUCTION BY: J. SHUMKA
DATE: 2017/04/05	DATE: 2017/04/05
CONSULTANT NO.: 474248	

ENGINEER'S SEAL
PROVINCE OF MANITOBA
T.T. TRAN
Member 40578
REGISTERED PROFESSIONAL ENGINEER
April 19/17.

Winnipeg
THE CITY OF WINNIPEG
WATER AND WASTE DEPARTMENT

SOUTH END WATER POLLUTION CONTROL CENTRE
SEWPCC UPGRADING/EXPANSION PROJECT
MECHANICAL
HVAC
STANDARD DETAILS (2)

CITY DRAWING NUMBER	SHEET	REV.	SIZE
1-0102-MDTL-A006		00	A1

PLOT DATE: 2017\03\29
FILE NAME: 1-0102-MDTL-A006.dgn

©CH2M HILL 2017. ALL RIGHTS RESERVED.