A1 SIZE – 594mm x 841mm

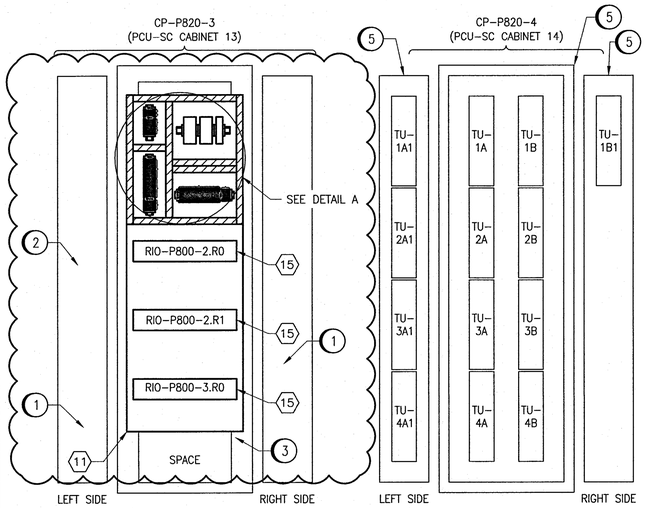

CP-P820-3 AND CP-P820-4 LAYOUT FRONT

SCALE: NTS

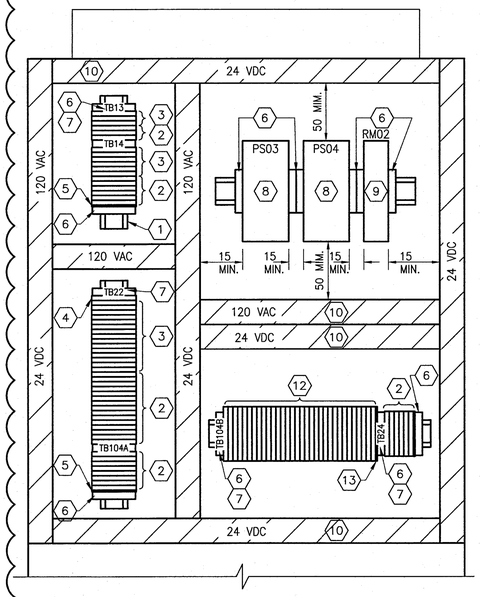

A DETAIL – INTERNAL LAYOUT

SCALE: 1 : 4

BILL OF MATERIALS				
ITEM	QTY	DESCRIPTION	MANUFACTURER	CATALOG NUMBER
1	AS REQ'D	35mm DIN RAIL	PHOENIX CONTACT	0801733
2	AS REQ'D	FEED THROUGH TERMINAL	PHOENIX CONTACT	3046184
3	AS REQ'D	FUSED TERMINAL – UT 4 WITH FUSE PLUG-P-FU 5X20	PHOENIX CONTACT	3046142 3036806
4	AS REQ'D	POTENTIAL EARTH TERMINAL – UT 4-MTD-PE/S	PHOENIX CONTACT	3046207
5	AS REQ'D	TERMINAL END PLATE – D-UT 2,5/4 TWIN	PHOENIX CONTACT	3047141
6	AS REQ'D	TERMINAL END CLAMP – CLIPFIX 35	PHOENIX CONTACT	3022218
7	AS REQ'D	TERMINAL BLOCK MARKER – KLM-A	PHOENIX CONTACT	1004348
8	2	24 VDC POWER SUPPLY, QUINT SERIES, 10A	PHOENIX CONTACT	2866763
9	1	ORING REDUNDANCY MODULE, QUINT SERIES, 2x10A	PHOENIX CONTACT	2320173
10	AS REQ'D	NARROW SLOT WIRING DUCT AND COVER, 1.26"x2.12"	PANDUIT	F1X2LG6
11	AS REQ'D	MOUNTING PANEL, WHITE ENAMEL FINISH	–	–
12	AS REQ'D	DOUBLE LEVEL FUSED TERMINAL – UTTB 4 WITH FUSE PLUG-P-FU 5X20	PHOENIX CONTACT	3044720 3036806
13	AS REQ'D	DOUBLE LEVEL TERMINAL END PLATE – D-UTTB 2,5/4	PHOENIX CONTACT	3047293
14	1	HOT STANDBY M580 RACK – AS PER DETAIL C	SCHNEIDER	–
15	3	X80 RIO RACK – AS PER DETAIL B	SCHNEIDER	–
16	2	CABLETEK HORIZONTAL CABLE MANAGER	HOFFMAN	DCHS1
17	1	RACK MOUNT ADJUSTABLE DIN RAIL FRAME	HAMMOND	RMAD19003BK
18	1	ELECTRONIC CIRCUIT PROTECTION CLASS 2 CIRCUITS ESX10-T (1A)	WEIDMULLER	6720005301
19	1	ETHERNET EXTENDED MANAGED SWITCH, DRS, 8 COPPER PORTS	SCHNEIDER	TCSESM083F23F1

GENERAL NOTES:

1. EXISTING DCS CABINETS TO BE RE-USED TO HOUSE NEW CONTROL SYSTEM COMPONENTS. PROVIDE MODIFICATIONS TO EXISTING CABINETS AS REQUIRED TO INCORPORATE NEW CONTROL SYSTEM EQUIPMENT AND WIRING. MEASURE, CONFIRM FIT, AND ADJUST THE WORK WITHIN THE CONSTRAINTS OF THE EXISTING CONDITIONS. PROVIDE ALL MOUNTING SUPPORTS AND HARDWARE AS REQUIRED. NEW WORK IS CLOUDED.
2. PROVIDE MOUNTING PANEL SECTIONS AS REQUIRED TO ALLOW FOR EXPEDITIOUS INSTALLATION WITHIN THE CABINET.
3. ALL DCS TERMINATION UNITS SHOWN ARE EXISTING.
4. SEE MODULE LAYOUT DRAWING FOR PLC AND RIO CONFIGURATION.
5. SEE NETWORK DIAGRAM FOR NETWORK CONNECTIONS REQUIRED.
6. ALL ETHERNET CABLING IS TO BE ATTACHED TO THE SIDE WALLS OF THE ENCLOSURE AND KEPT AS FAR AS POSSIBLE FROM 120VAC WIRING.
7. USE PRE-MANUFACTURED IO CORDSETS TO CONNECT EXISTING TERMINATION UNITS TO PLC IO MODULES. ENSURE CORDSET LENGTHS ARE SIZED SUCH THAT CABLE SLACK IS NOT EXCESSIVE.
8. PANEL REQUIRES INSPECTION BY THE OFFICE OF FIRE COMMISSIONER FOR SPECIAL ACCEPTANCE.
9. SEE ACBD-PD01 FOR EXISTING LAYOUT AND REMOVAL DETAILS.

PANEL MANUFACTURE NOTES:

1. ALL POWER WIRING TO BE TEW/MTW 300V, 105°C INSULATION, STRANDED COPPER, 12 AWG OR LARGER WHERE CURRENT REQUIREMENTS DICTATE AS PER CEC REQUIREMENTS.
2. ALL CONTROL WIRING TO BE TEW/MTW 300V, 105°C INSULATION, STRANDED COPPER, 16 AWG.
3. ALL ANALOG WIRING TO BE 18 AWG SHIELDED TWISTED PAIR, WITH INSULATION RATED AT 300V.
4. EXTERNAL COMPONENTS ARE TO BE LABELED AS SHOWN ON THE DRAWINGS.
5. ALL FUSES ARE TO BE PROVIDED. IN ADDITION, TWO SPARES OF EACH FUSE SIZE ARE TO BE PROVIDED.
6. TEST ALL WIRING AND COMPONENTS FOR FUNCTIONAL OPERATION, CORRECT CONNECTION, CONTINUITY AND INSULATION INTEGRITY. DOCUMENT ALL TEST RESULTS.
7. ALL MAJOR COMPONENTS INSIDE THE PANEL ARE TO BE LABELED WITH LAMACOIDS IN ACCORDANCE WITH MAJOR DESCRIPTIONS ON THE DRAWINGS.
8. PROVIDE WIRE BARREL FERRULES FOR ALL WIRING.
9. ALL TERMINAL BLOCKS SHALL BE NUMBERED AS SHOWN IN THE DRAWINGS, COMPLETE WITH GROUP LABELING.
10. ALL WIRES SHALL BE MARKED AS INDICATED ON THE DRAWINGS.
11. ROUTE ALL 24VDC WIRING SEPARATE FROM 120VAC WIRING.
12. JUMPER BARS SHALL BE USED INSTEAD OF WIRE JUMPERS WHERE POSSIBLE.

SPECIFIC NOTES:

1. TIE-WRAP CORDSETS FOR TERMINATION UNITS TOGETHER ALONG SIDE OF CABINET. GROUP CORDSETS FOR ANALOG SIGNALS TOGETHER AND ENSURE A MINIMUM OF 50mm SEPARATION FROM 120 VAC WIRING. DO NOT IMPEDE ACCESS TO REMOTE IO RACKS.
2. WHERE WIRES CANNOT BE RUN IN WIREWAY, INSTALL IN A NEAT AND ORDERLY MANNER ALONG SIDE OF CABINET.
3. USE EXISTING MOUNTING RAILS TO MOUNT NEW MOUNTING PANELS.
4. ADJUST FRAME TO SUIT INSTALLATION REQUIREMENTS.
5. REPLACE ALL 0.25A FUSES ON DISCRETE INPUT TERMINATION UNITS WITH 0.125A FUSES.

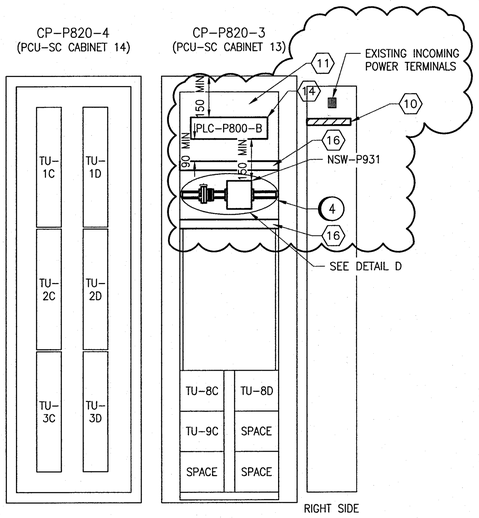

CP-P820-3 AND CP-P820-4 LAYOUT BACK

SCALE: NTS

RIO-P800-2.R0
RACK: BME XBP 1200

PS	0	1	2	3	4	5	6	7	8	9	10	11	
BMX CPS 3020	BME CRA 312 10	BMX DAI 1604 C1	BMX DAI 1604 C1	BMX DAI 1604 C1	BMX DAI 1604 C1	BMX DAI 1604 C1	BMX DAI 1604 C1	BMX DAI 1604 C1	BMX DAI 1604 C1	BMX DAI 1604 C1	BMX DAI 1604 C1	BMX DAI 1604 C1	BMX XBE 1000

RIO-P800-2.R1
RACK: BMX XBP 1200

PS	0	1	2	3	4	5	6	7	8	9	10	11	
BMX CPS 2010	BMX DAI 1604 C1	BMX DAI 1604 C1	SPACE (BMX XEM 010)	SPACE (BMX XEM 010)	BMX DDI 3202K S1	BMX DDO 1602 C2	BMX DDO 1602 C2	BMX DDO 1602 C2	BMX DDO 1602 C2	BMX DDO 1602 C2	BMX DDO 1602 C2	SPACE (BMX XEM 010)	BMX XBE 1000

RIO-P800-3.RO
RACK: BME XBP 1200

PS	0	1	2	3	4	5	6	7	8	9	10	11	
BMX CPS 3020	BME CRA 312 10	BMX AMI 0810 C3	BMX AMI 0810 C3	BMX AMI 0810 C3	BMX AMI 0810 C3	BMX AMO 0802 C4	BMX AMO 0802 C4	SPACE (BMX XEM 010)	SPACE (BMX XEM 010)	SPACE (BMX XEM 010)	SPACE (BMX XEM 010)	SPACE (BMX XEM 010)	SPACE

TSX TLY EX (T)

BMX XBC 008K
X-BUS CORDSET

TSX TLY EX (T)

B DETAIL – RIO RACK CONFIGURATION

SCALE: NTS

CONNECTOR LEGEND

- S1 BMX FCW 303 40-WAY CONNECTOR WITH FLYING LEADS
- C1 CORDSET – TYPE 1 SEE DWG. ADTL-A011 FOR DETAILS
- C2 CORDSET – TYPE 2 SCHNEIDER PART No.: 990ADBLYX80104
- C3 CORDSET – TYPE 3 SCHNEIDER PART No.: 990ADBLYX80101
- C4 CORDSET – TYPE 4 SCHNEIDER PART No.: 990ADBLYX80102

PLC-P800-B
RACK: BME XBP 0800
HSBY SFP SOCKET – RJ45: 490NAC0100

PS	0	1	2	3	4	5	6	7	
BMX CPS 3020	BME H58 4040		BME NOC 0301	BME NOC 0321	SPACE (BMX XEM 010)	BME NOC 0301	SPACE (BMX XEM 010)	SPACE (BMX XEM 010)	SPACE

C DETAIL – HOT STANDBY M580 RACK CONFIGURATION

SCALE: NTS

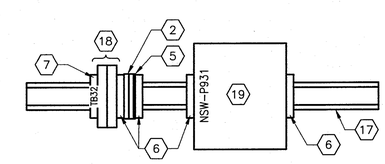

D DETAIL – INTERNAL LAYOUT

SCALE: 1 : 4

REFERENCE DRAWINGS	DESCRIPTION
1-0102-ACBD-PD01	CABINET LAYOUT, DEMOLITION
1-0102-ANET-P003	NETWORK DIAGRAM
1-0102-AGAD-P001	EQUIPMENT LAYOUT, CONTROL ROOM

1:4 40 0 80 160

APEGM Certificate of Authorization
SNC-Lavalin Inc.
No. 4489

NO.	REVISIONS	DATE	DESIGN	CHECK
00	ISSUED FOR CONSTRUCTION – 976-2016	2017/04/05	MW	TMC

CH2MHILL. SNC·LAVALIN KGS GROUP

DESIGNED BY: M. WANG	CHECKED BY: T. CHURCH
DRAWN BY: M. WANG	APPROVED BY: E. RYCZKOWSKI
SCALE: AS SHOWN	ISSUED FOR CONSTRUCTION BY: J. SHUMKA
DATE: 2014/10/23	DATE: 2017/04/05
CONSULTANT NO.: 474248	

ENGINEER'S SEAL: PROVINCE OF MANITOBA, T. M. CHURCH, Member 32682, REGISTERED PROFESSIONAL ENGINEER, Apr. 4, 2017

THE CITY OF WINNIPEG
WATER AND WASTE DEPARTMENT

SOUTH END WATER POLLUTION CONTROL CENTRE
SEWPCC UPGRADING/EXPANSION PROJECT
AUTOMATION – CABINET LAYOUT
PRIMARY CLARIFIERS
CP-P820-3 AND CP-P820-4

CITY DRAWING NUMBER	SHEET	REV.	SIZE
1-0102-ACBD-P008	001	00	A1

LAST SAVE: 2017/04/01 – 10:28am
PATH: C:\pw_workdir\ch2mhill_wbg\sh043264\d0356273\1-0102-ACBD-P008.dwg

PLOT DATE: Apr 01, 2017 – 10:28am

FILE NAME:1-0102-ACBD-P008.dwg