A1 SIZE - 594mm x 841mm

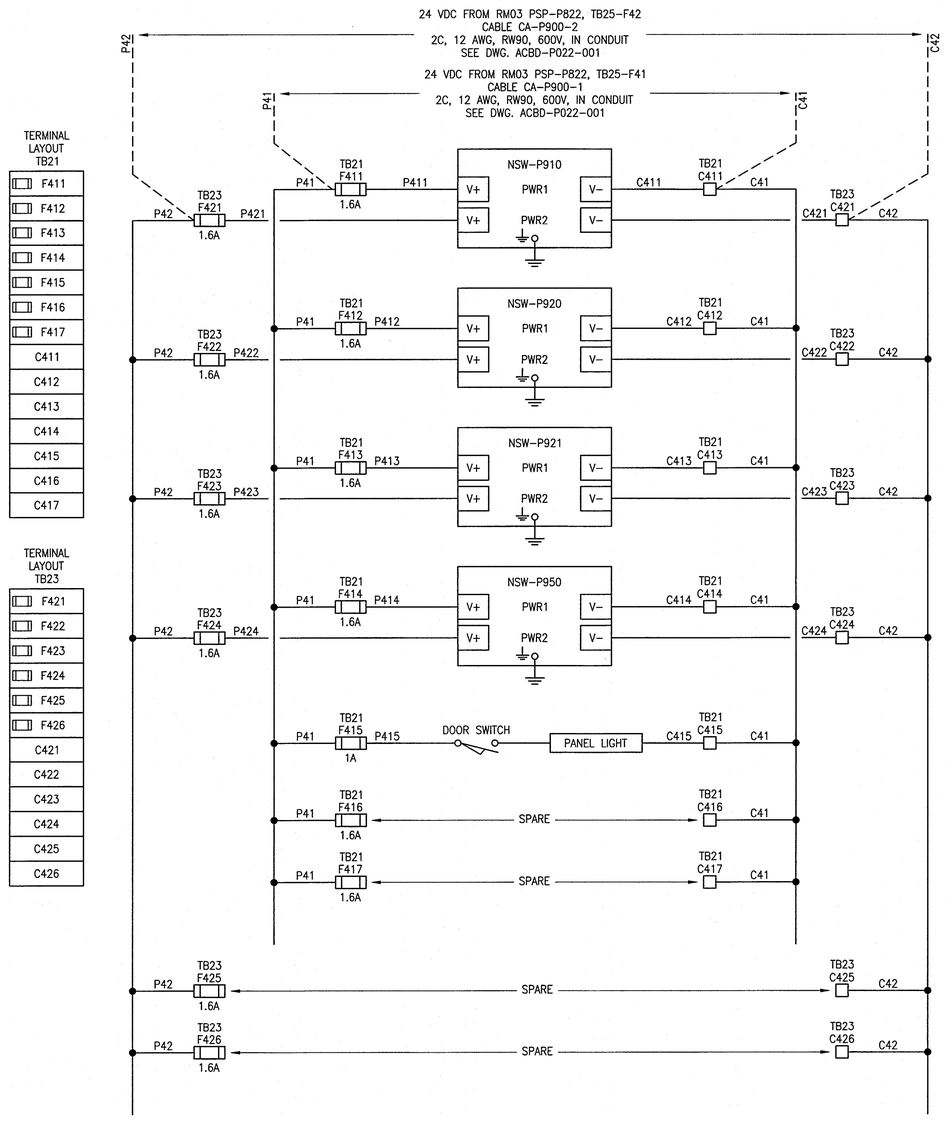


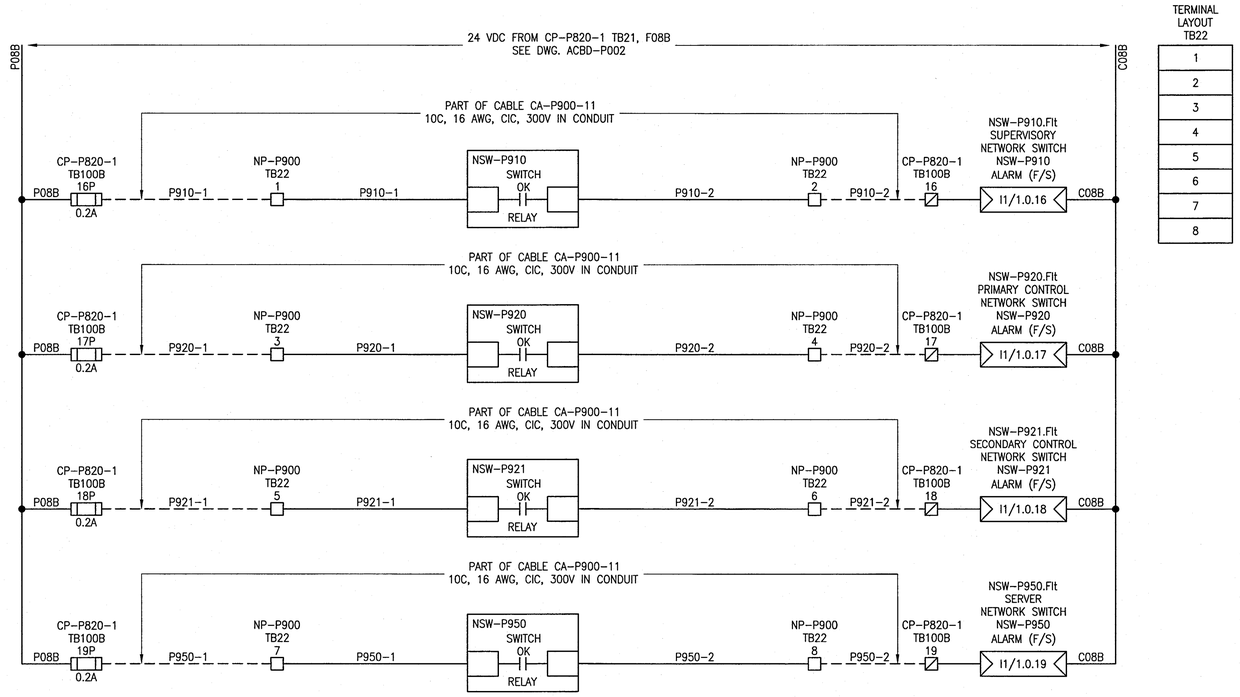


## FUSE SCHEDULE

| TB | IDENTIFIER | SIZE | RATED CURRENT |
|---|---|---|---|
| TB21 | F411 | 5x20mm | 1.6A FA |
| | F412 | 5x20mm | 1.6A FA |
| | F413 | 5x20mm | 1.6A FA |
| | F414 | 5x20mm | 1.6A FA |
| | F415 | 5x20mm | 1A FA |
| | F416 | 5x20mm | 1.6A FA |
| | F417 | 5x20mm | 1.6A FA |
| TB23 | F421 | 5x20mm | 1.6A FA |
| | F422 | 5x20mm | 1.6A FA |
| | F423 | 5x20mm | 1.6A FA |
| | F424 | 5x20mm | 1.6A FA |
| | F425 | 5x20mm | 1.6A FA |
| | F426 | 5x20mm | 1.6A FA |

NOTES
FA = FAST ACTING

## POWER CONSUMPTION SCHEDULE AT 24 VDC

| LOAD | RM03 CURRENT (mA) | NOTES |
|---|---|---|
| NSW-P910 | 400 | 1 |
| NSW-P920 | 460 | 1 |
| NSW-P921 | 400 | 1 |
| NSW-P950 | 400 | 1 |
| LED24V15 | 500 | 1 |
| TOTAL | 2160 | |

NOTES
1. BASED ON DATA SHEET.

LEGEND:

- EQUIPMENT GROUND
- NP-P900 TERMINAL
- CP-P820-1 TERMINAL

| REFERENCE DRAWINGS | DESCRIPTION |
|---|---|
| 1-0102-ACBD-P901 | CABINET LAYOUTM NP-P900 NETWORK CABINET |

APEGM Certificate of Authorization
SNC-Lavalin Inc.
No. 4489

| NO. | REVISIONS | DATE | DESIGN | CHECK |
|---|---|---|---|---|
| 00 | ISSUED FOR CONSTRUCTION - 976-2016 | 2017/04/05 | MW | PC |

CH2MHILL. SNC·LAVALIN KGS GROUP

DESIGNED BY: M. WANG
CHECKED BY: P. CHICATUN
DRAWN BY: MJ. PERSSON
APPROVED BY: E. RYCZKOWSKI
SCALE: NTS
ISSUED FOR CONSTRUCTION BY: J. SHUMKA
DATE: 2016/01/19
DATE: 2017/04/05
CONSULTANT NO.: 474248

ENGINEER'S SEAL
PROVINCE OF MANITOBA
CHICATUN
Member 30307
REGISTERED PROFESSIONAL ENGINEER
APR. 21 2017

Winnipeg
THE CITY OF WINNIPEG
WATER AND WASTE DEPARTMENT

SOUTH END WATER POLLUTION CONTROL CENTRE
SEWPCC UPGRADING/EXPANSION PROJECT
AUTOMATION - POWER DISTRIBUTION SCHEMATIC
PRIMARY CLARIFIERS
NP-P900 NETWORK CABINET

| CITY DRAWING NUMBER | SHEET | REV. | SIZE |
|---|---|---|---|
| 1-0102-ACBD-P902 | 001 | 00 | A1 |

LAST SAVE: 2017/04/01 - 10:31am
PATH: C:\pw_workdir\ch2mhill_wbg\sh043264\d0356273\1-0102-ACBD-P902.dwg

PLOT DATE: Apr 01, 2017 - 10:31am
FILE NAME:1-0102-ACBD-P902.dwg