A1 SIZE – 594mm x 841mm

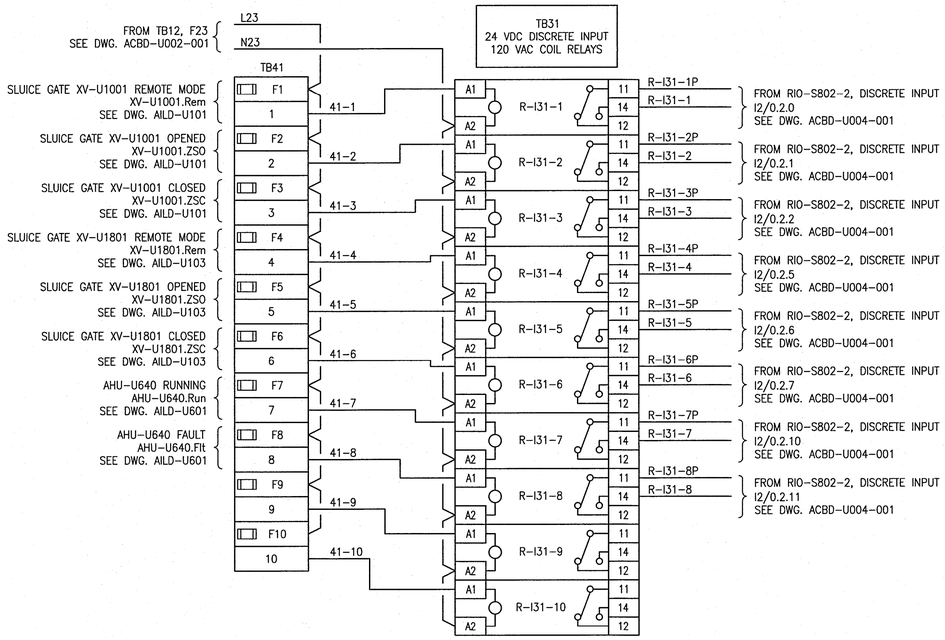

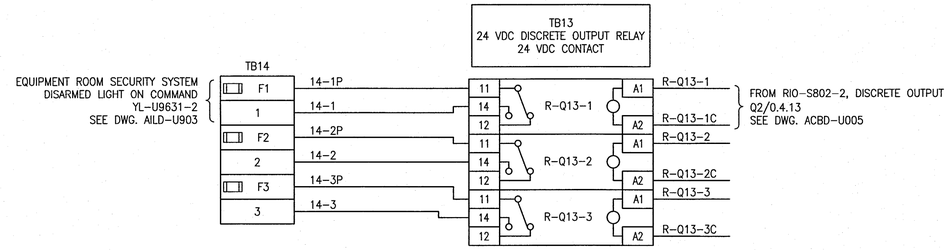

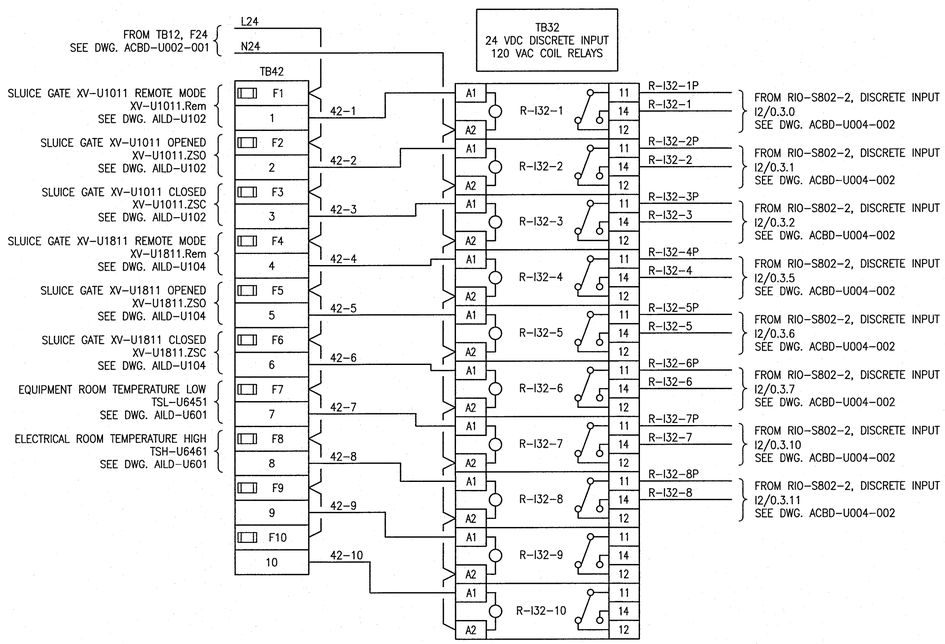

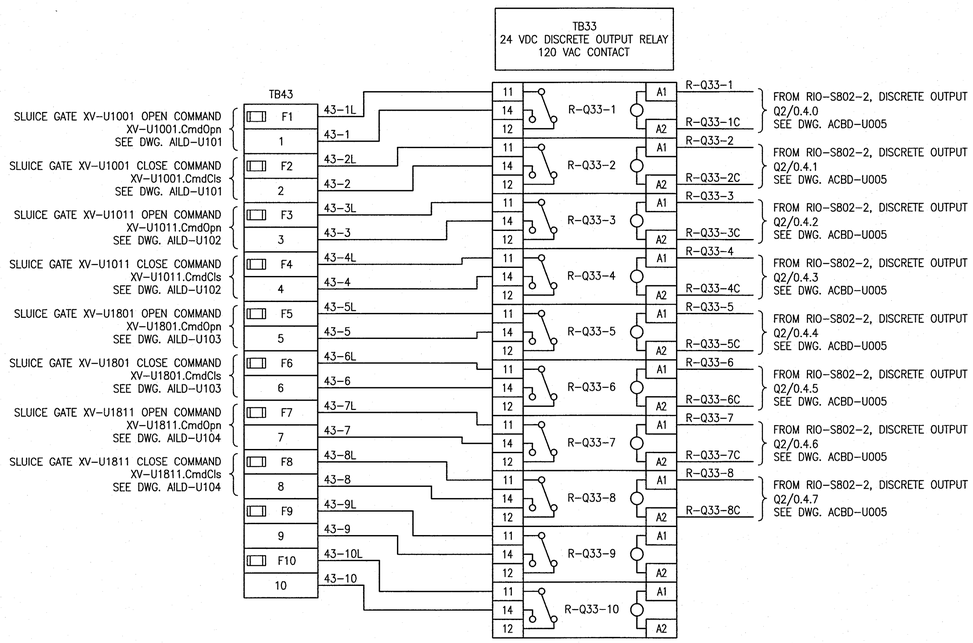

FUSE SCHEDULE

TB	IDENTIFIER	SIZE	RATING
TB41	F1	5x20mm	0.2A FA
	F2	5x20mm	0.2A FA
	F3	5x20mm	0.2A FA
	F4	5x20mm	0.2A FA
	F5	5x20mm	0.2A FA
	F6	5x20mm	0.2A FA
	F7	5x20mm	0.2A FA
	F8	5x20mm	0.2A FA
	F9	5x20mm	0.2A FA
	F10	5x20mm	0.2A FA
TB42	F1	5x20mm	0.2A FA
	F2	5x20mm	0.2A FA
	F3	5x20mm	0.2A FA
	F4	5x20mm	0.2A FA
	F5	5x20mm	0.2A FA
	F6	5x20mm	0.2A FA
	F7	5x20mm	0.2A FA
	F8	5x20mm	0.2A FA
	F9	5x20mm	0.2A FA
	F10	5x20mm	0.2A FA
TB43	F1	5x20mm	5A TD
	F2	5x20mm	5A TD
	F3	5x20mm	5A TD
	F4	5x20mm	5A TD
	F5	5x20mm	5A TD
	F6	5x20mm	5A TD
	F7	5x20mm	5A TD
	F8	5x20mm	5A TD
	F9	5x20mm	5A TD
	F10	5x20mm	5A TD
TB14	F1	5x20mm	2A TD
	F2	5x20mm	2A TD
	F3	5x20mm	2A TD

NOTES
FA = FAST ACTING
TD = TIME DELAY

REFERENCE DRAWINGS	DESCRIPTION

APEGM
Certificate of Authorization
SNC-Lavalin Inc.
No. 4489

NO.	REVISIONS	DATE	DESIGN	CHECK
00	ISSUED FOR CONSTRUCTION – 976–2016	2017/04/05	MW	PC

CH2MHILL. KGS GROUP SNC·LAVALIN

DESIGNED BY: M. WANG	CHECKED BY: P. CHICATUN
DRAWN BY: S. BOGHOSIAN	APPROVED BY: E. RYCZKOWSKI
SCALE: NTS	ISSUED FOR CONSTRUCTION BY: J. SHUMKA
DATE: 2016/03/24	DATE: 2017/04/05
CONSULTANT NO.: 474248	

ENGINEER'S SEAL
PROVINCE OF MANITOBA
P. D. CHICATUN
Member 30307
REGISTERED PROFESSIONAL ENGINEER
MAR 31 2017
REV. 00

Winnipeg
THE CITY OF WINNIPEG
WATER AND WASTE DEPARTMENT

SOUTH END WATER POLLUTION CONTROL CENTRE
SEWPCC UPGRADING/EXPANSION PROJECT
AUTOMATION – WIRING DIAGRAM
UV DISINFECTION BUILDING
CP–U821, RIO–S802–2 – MISCELLANEOUS WIRING

CITY DRAWING NUMBER	SHEET	REV.	SIZE
1–0102–ACBD–U003	001	00	A1

LAST SAVE: 2017/03/27 – 2:30pm
PATH: E:\1–0102–ACBD–U003.dwg

PLOT DATE: Mar 27, 2017 – 2:30pm
FILE NAME: 1–0102–ACBD–U003.dwg