A1 SIZE – 594mm x 841mm

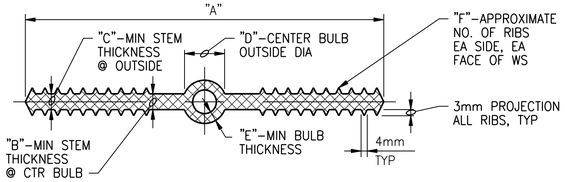

SIZE	"A"	"B"	"C"	"D"	"E"	"F"
150mmx10mm	150mm	10mm	10mm	22mm	6mm	6
225mmx10mm	225mm	10mm	10mm	25mm	6mm	8

NOTES:

1. NON–ROUND CENTER BULBS SHALL HAVE A MINIMUM OUTSIDE DIMENSION OF 'D'.
2. SEE SPLICE DETAIL (0315–011)
3. BULB TYPE WATERSTOP SHOWN IS REQUIRED FOR EXPANSION AND CONTROL JOINTS. SIMILAR WATERSTOPS WITHOUT CENTER BULB MAY BE SUBSTITUTED AT CONSTRUCTION JOINTS.
4. USE 150mm WATERSTOPS IN ALL CONSTRUCTION JOINTS UNLESS SPECIFICALLY SHOWN OTHERWISE.

PLASTIC WATERSTOP

NTS (0315–001)

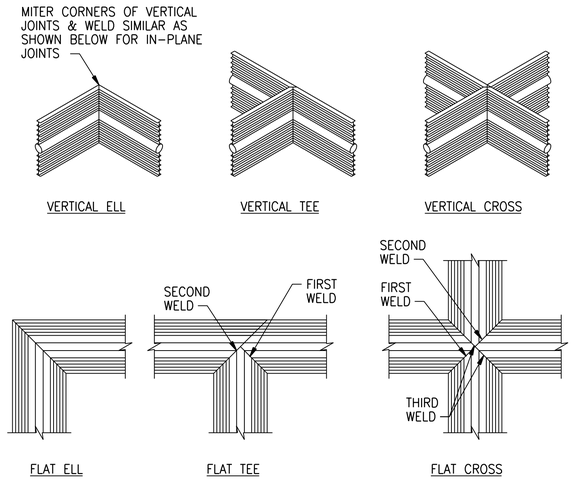

NOTE:

ALL WELDS SHALL BE PER WATERSTOP MANUFACTURER'S RECOMMENDATIONS.

WATERSTOP JOINTS

NTS (0315–011)

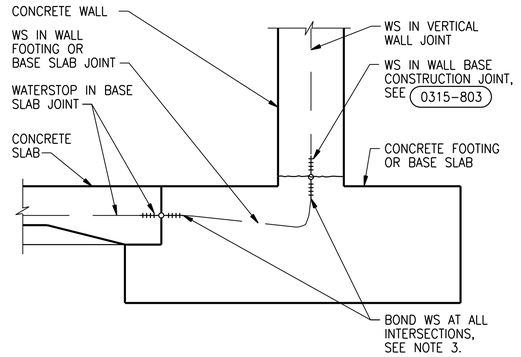

NOTES:

1. SUBMIT DETAILS OF SPLICING AND LOCATION.
2. BOND OR SPLICE ALL HORIZONTAL TRANSVERSE WATERSTOPS IN BASE SLAB JOINTS TO CONTINUOUS LONGITUDINAL WATERSTOP IN WALL BASE FOR COMPLETE SEAL.
3. BOND OR SPLICE ALL VERTICAL WATERSTOPS IN WALL JOINTS TO LONGITUDINAL WATERSTOP IN WALL BASE FOR COMPLETE SEAL. (0315–011) FLAT CROSS JOINT.
4. FOR PLASTIC WATERSTOP DETAILS, SEE (0315–001)

WATERSTOP CONNECTION

NTS (0315–012)

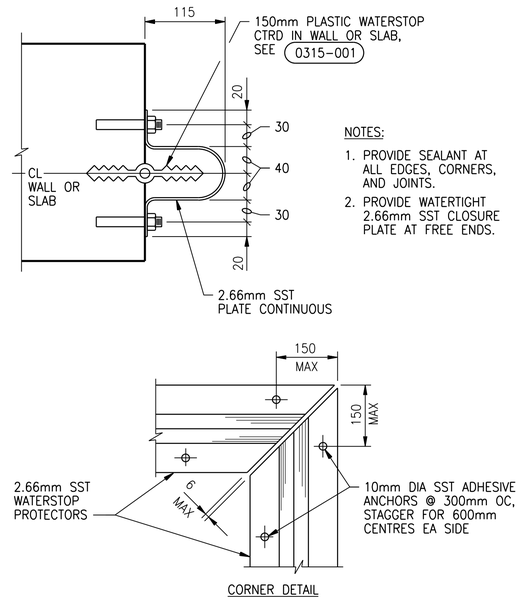

NOTES:

1. PROVIDE SEALANT AT ALL EDGES, CORNERS, AND JOINTS.
2. PROVIDE WATERTIGHT 2.66mm SST CLOSURE PLATE AT FREE ENDS.

WATERSTOP PROTECTOR

NTS (0315–021)

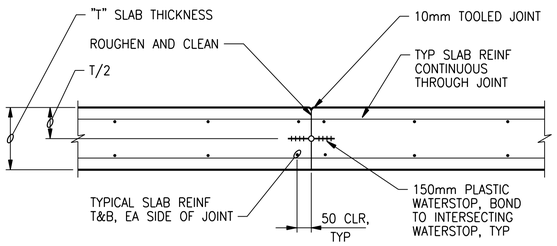

SLAB CONSTRUCTION JOINT

NTS (0315–142)

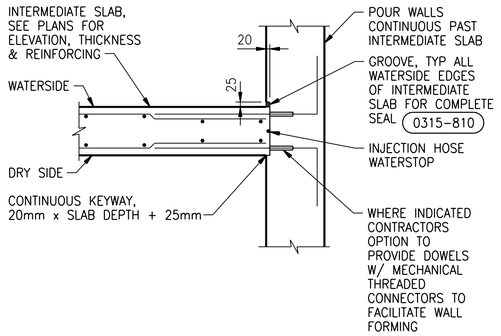

SLAB CONSTRUCTION JOINT AT WALL

NTS (0315–143)

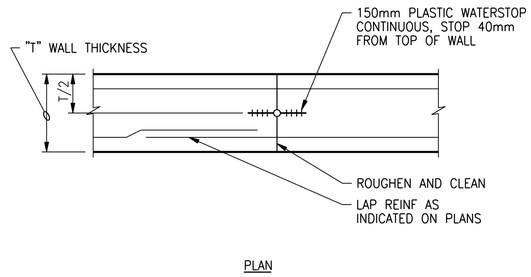

NOTES:

1. ALL REINFORCING CONTINUOUS ACROSS JOINT.
2. FOR LOCATIONS, SEE (0315–807)

WALL VERTICAL CONSTRUCTION JOINT

NTS (0315–151)

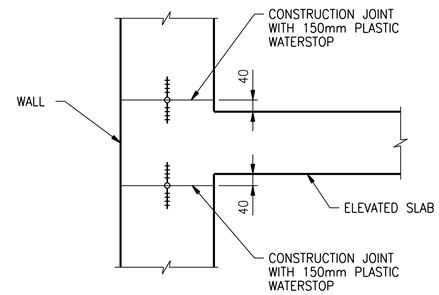

WALL CONSTRUCTION JOINT AT ELEVATED SLAB

NTS (0315–152)

APEGM
Certificate of Authorization
CH2M HILL Canada Ltd.
No. 1441

NO.	REVISIONS	DATE	DESIGN	CHECK
02	ISSUED FOR CONSTRUCTION – 976–2016	2017/04/05	G.O.	J.C.
01	ISSUED FOR CONSTRUCTION	10/2015	G.O.	J.C.
00	ISSUED FOR TENDER	08/2015	G.O.	J.C.

CH2MHILL. KGS GROUP SNC·LAVALIN

DESIGNED BY: J. THANNICKAL
CHECKED BY: E. LUI
DRAWN BY: G.OMORI
APPROVED BY: H.T. FREIHAMMER
SCALE: NTS
ISSUED FOR CONSTRUCTION BY: J. SHUMKA
DATE: 2017/04/05
DATE: 2017/04/05
CONSULTANT NO.: 474248

ENGINEER'S SEAL
APR 5, 2017
PROVINCE OF MANITOBA
LUI
Member
37003
REGISTERED PROFESSIONAL ENGINEER

Winnipeg
THE CITY OF WINNIPEG
WATER AND WASTE DEPARTMENT

SOUTH END WATER POLLUTION CONTROL CENTRE
SEWPCC UPGRADING/EXPANSION PROJECT
STRUCTURAL
STANDARD DETAILS (1)

CITY DRAWING NUMBER	SHEET	REV.	SIZE
1–0102–SDTL–A002		02	A1

PLOT DATE: 2017\03\29
FILE NAME: 1–0102–SDTL–A002.dgn

©CH2M HILL 2017. ALL RIGHTS RESERVED.