A1 SIZE – 594mm x 841mm

FUSE SCHEDULE

TB	IDENTIFIER	SIZE	RATING
TB19	F42100	5x20mm	5A TD
	F43100	5x20mm	5A TD
	F43301	5x20mm	1A FA
	F43302	5x20mm	1A FA
	F43303	5x20mm	1A FA
TB20	F42201	5x20mm	0.5A FA
	F42202	5x20mm	0.5A FA
	F42203	5x20mm	0.5A FA
	F42204A	5x20mm	0.5A FA
	F42204B	5x20mm	0.5A FA
	F42205A	5x20mm	0.5A FA
	F42205B	5x20mm	0.5A FA
	F42206A	5x20mm	0.5A FA
	F42206B	5x20mm	0.5A FA
	F42207	5x20mm	5A FA
	F42208	5x20mm	5A FA
	F42209	5x20mm	5A FA
	F42210	5x20mm	5A FA
	F42211	5x20mm	5A FA
	F42212	5x20mm	1A FA
	F42213	5x20mm	1A FA

NOTES
FA = FAST ACTING
TD = TIME DELAY

CP-D826 POWER CONSUMPTION SCHEDULE AT 24 VDC

LOAD	QTY.	CURRENT (mA)	SUBTOTAL (mA)	NOTES
PLC-D806.R0	1	1650	1650	1
PLC-D806.R1	1	1650	1650	1
DISCRETE INPUTS	64	2.5	160	2
DISCRETE OUTPUTS	16	50	800	3
ANALOG INPUTS	24	20	480	2
LED24V15	2	500	1000	2
TOTAL			5740	

NOTES
1. BASED ON MAXIMUM SUPPLY CURRENT ON POWER SUPPLY DATA SHEET.
2. BASED ON DATA SHEET.
3. ESTIMATED.

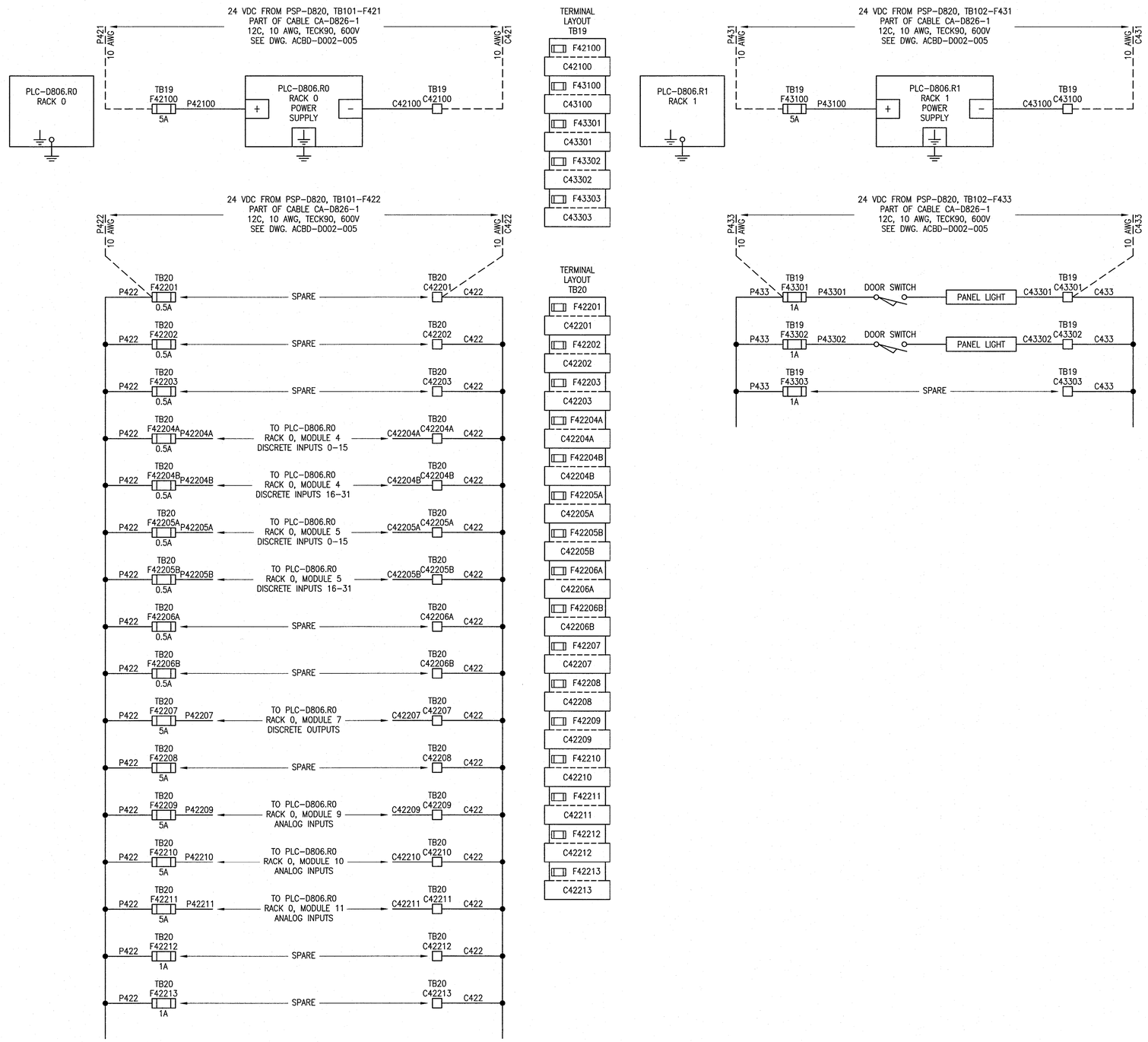

LEGEND:

⏚ EQUIPMENT GROUND

REFERENCE DRAWINGS	DESCRIPTION
–	–

APEGM Certificate of Authorization
SNC-Lavalin Inc.
No. 4489

NO.	REVISIONS	DATE	DESIGN	CHECK
00	ISSUED FOR CONSTRUCTION – 976-2016	2017/04/05	MW	PC

CH2MHILL. SNC·LAVALIN KGS GROUP

DESIGNED BY: M. WANG	CHECKED BY: P. CHICATUN
DRAWN BY: B. DE GUZMAN	APPROVED BY: E. RYCZKOWSKI
SCALE: NTS	ISSUED FOR CONSTRUCTION BY: J. SHUMKA
DATE: 2016/08/17	DATE: 2017/04/05
CONSULTANT NO.: 474248	

ENGINEER'S SEAL
PROVINCE OF MANITOBA
CHICATUN Member 30307
REGISTERED PROFESSIONAL ENGINEER
Apr 4 2017 REV. 00

Winnipeg
THE CITY OF WINNIPEG
WATER AND WASTE DEPARTMENT

SOUTH END WATER POLLUTION CONTROL CENTRE
SEWPCC UPGRADING/EXPANSION PROJECT
AUTOMATION – POWER DISTRIBUTION SCHEMATIC
FERMENTERS/THICKENERS/BIOFILTERS
CP-D826, HVAC PLC CABINET – PLC-D806

CITY DRAWING NUMBER	SHEET	REV.	SIZE
1-0102-ACBD-D032	001	00	A1

PLOT DATE: Apr 01, 2017 – 10:12am
FILE NAME:1-0102-ACBD-D032.dwg

LAST SAVE: 2017/04/01 – 10:12am
PATH: C:\pw_workdir\ch2mhill_wbg\sh0432641\d0356273\1-0102-ACBD-D032.dwg