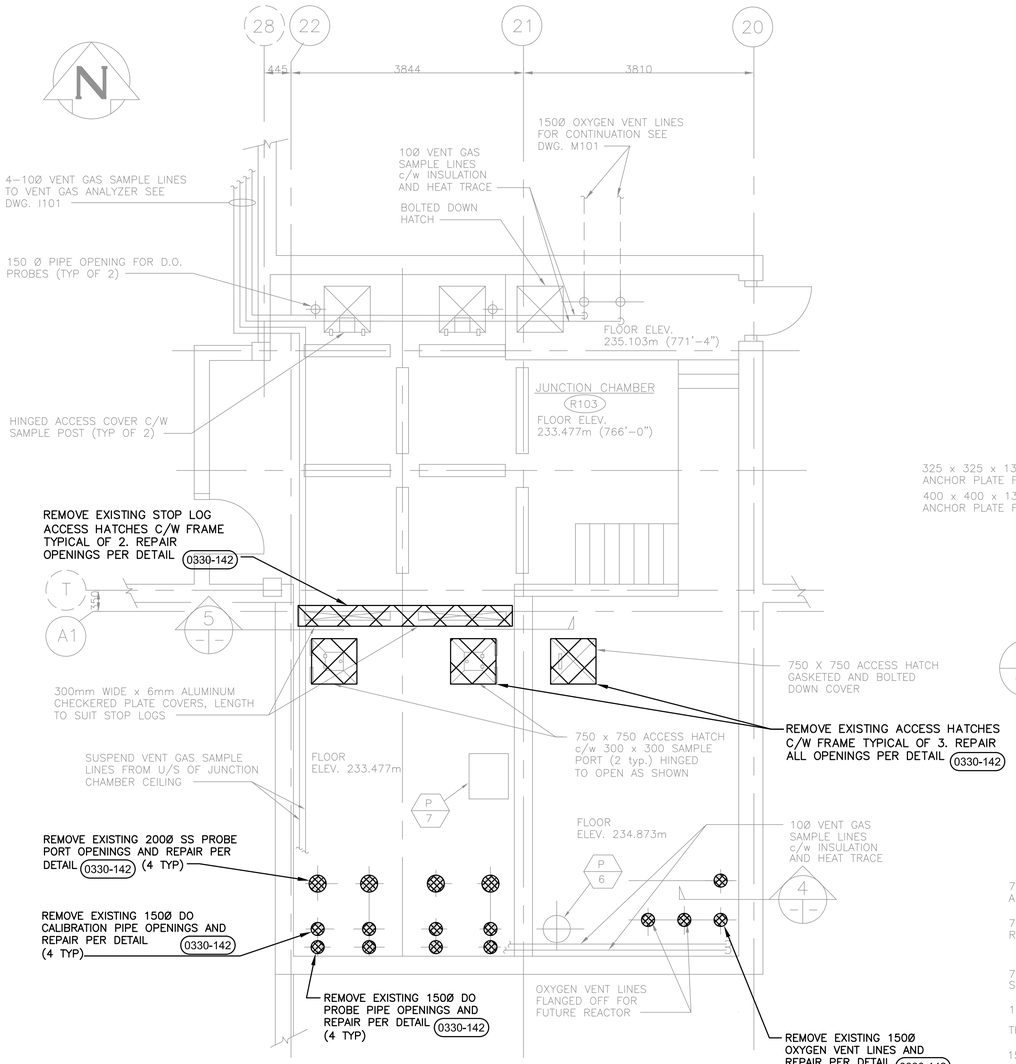

1 PARTIAL PLAN OXYGEN REACTOR TANKS
1:50

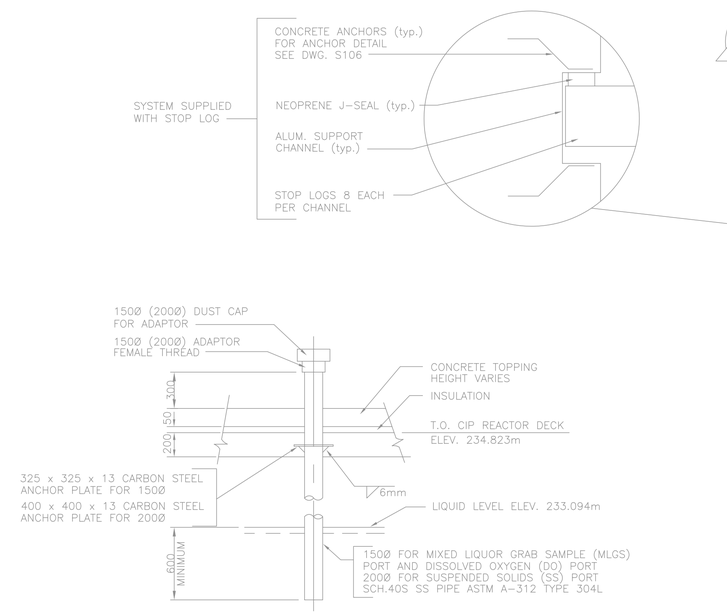

3 MIXED LIQUOR GRAB SAMPLE, DISSOLVED OXYGEN AND SUSPENDED SOLIDS PORT
1:25

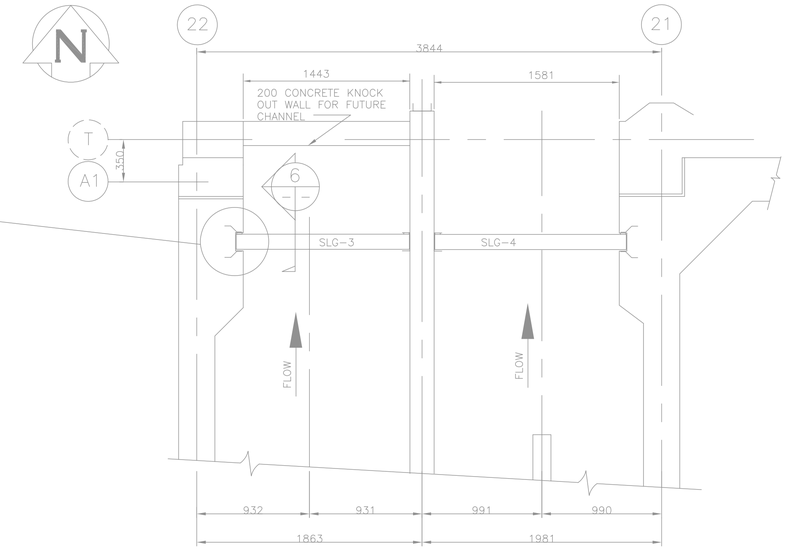

5 PLAN OF STOP LOGS
1:25

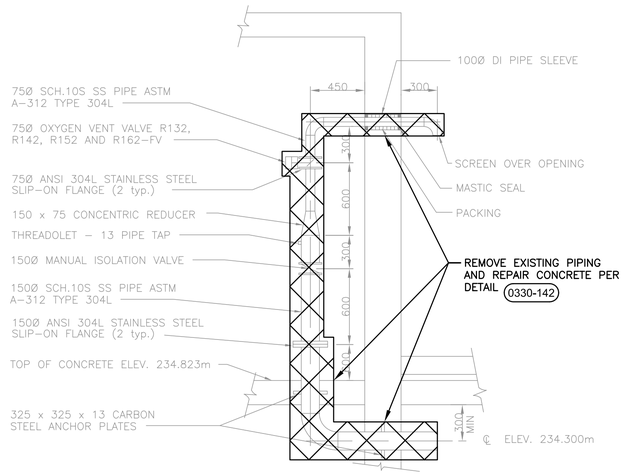

4 TYPICAL OXYGEN VENT LINE DECK AND TANK WALL PENETRATION
1:25

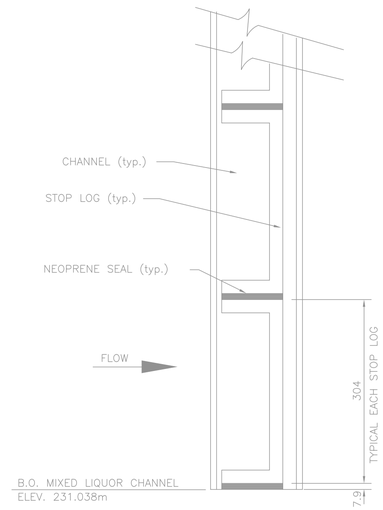

6 SECTION THRU STOP LOGS
1:5

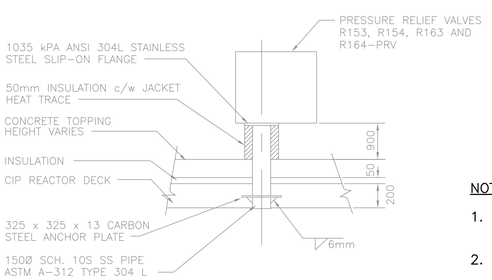

2 PRV DECK PENTRATION
1:25

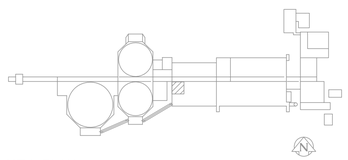

KEY PLAN
N.T.S.

NOTES:

1. FOR NEW CONSTRUCTION SEE PROCESS/MECHANICAL PRIMARY SLUDGE FERMENTERS/THICKENERS DRAWINGS.
2. REFER TO GENERAL DEMOLITION NOTES DRAWING 1–0102–DAAA–AD01.

AS CONSTRUCTED
DATE SEPTEMBER 1993 BY P.R.B.
APPROVED BY

NO.	REVISIONS	DATE	BY
00	ISSUED FOR CONSTRUCTION – 976–2016	04/05/2017	K.F.

B.M. ELEV.

Mac LAREN ENGINEERS INC.
WARDROP ENGINEERING INC.
ENGINEERING CONSULTANTS

DESIGNED BY	S.Q.	CHECKED BY	
DRAWN BY	V.J.H.	APPROVED BY	
HOR. SCALE: VERTICAL:	AS SHOWN	RELEASED FOR CONSTRUCTION:	
DATE	JANUARY 1990	DATE	

ORIGINALLY DESIGNED BY
ENGINEER'S SEAL
PROVINCE OF MANITOBA
April 5, 2017
F. J. ABSI
Member 36875
REGISTERED PROFESSIONAL ENGINEER
CONSULTANT DRAWING NO.
F.J. Absi
870012–01–19–R–M102

THE CITY OF WINNIPEG
WORKS AND OPERATIONS DIVISION
WATERWORKS, WASTE & DISPOSAL DEPARTMENT

SOUTH END WATER POLLUTION CONTROL CENTRE
OXYGEN REACTOR EXPANSION – MECHANICAL
OXYGEN REACTORS
JUNCTION CHAMBER PLAN, SECTION AND DETAILS

CITY DRAWING NUMBER
SHEET OF
SEP–347