B SIZE – 279mm x 432mm

FIELD

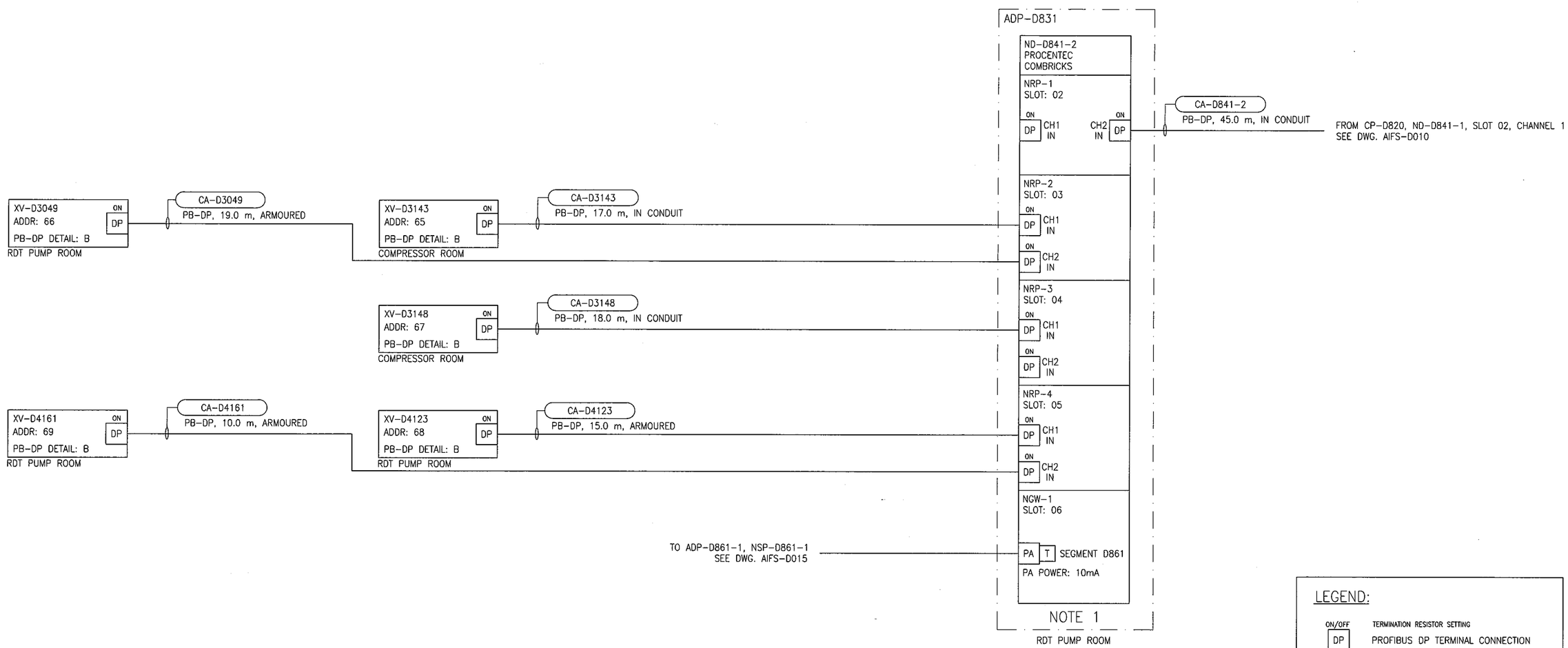

NOTES:

1. ALL PROFIBUS MODULES SET TO NETWORK 1 WITH DIP SWITCHES.
2. PROFIBUS DP NETWORK DESIGNED FOR 1.5Mbps BUT OPERATED AT 500Kbps.
3. REFER TO DWG. 1-0102-ADTL-A020 FOR PROFIBUS DP WIRING DETAILS.
4. ALL PROFIBUS PA MODULES SET TO LINK MODE.

APEGM Certificate of Authorization
SNC-Lavalin Inc.
No. 4489

NO.	REVISIONS	DATE	DESIGN	CHECK
00	ISSUED FOR CONSTRUCTION – 976-2016	2017/04/05	MW	PC

SNC·LAVALIN CH2MHILL KGS GROUP CONSULTING ENGINEERS

DESIGNED BY: M. WANG	CHECKED BY: P. CHICATUN
DRAWN BY: M. WANG	APPROVED BY: E. RYCZKOWSKI
SCALE: NTS	DATE: 2016/07/08
ISSUED FOR CONSTRUCTION BY: J. SHUMKA	DATE: 2017/04/05
CONSULTANT NO.: 474248	

ENGINEER'S SEAL
PROVINCE OF MANITOBA
P. CHICATUN
Member
30307
REGISTERED PROFESSIONAL ENGINEER
APR. 4, 2017
REV. 00

Winnipeg
THE CITY OF WINNIPEG
WATER AND WASTE DEPARTMENT

SOUTH END WATER POLLUTION CONTROL CENTRE
SEWPCC UPGRADING/EXPANSION PROJECT
AUTOMATION – PROFIBUS SEGMENT DIAGRAM
FERMENTERS/THICKENERS/BIOFILTERS – BRANCH 2
PROFIBUS DP SEGMENT ND-D841-2

CITY DRAWING NUMBER	SHEET	REV.	SIZE
1-0102-AIFS-D011	001	00	B

LAST SAVE: 2017/04/01 – 9:50am
PATH: C:\pw_workdir\ch2mhill_wbg\sh043264\d0356273\1-0102-AIFS-D011.dwg

PLOT DATE: Apr 01, 2017 – 9:50am

FILE NAME: 1-0102-AIFS-D011.dwg