A1 SIZE – 594mm x 841mm

FUSE SCHEDULE

TB	IDENTIFIER	SIZE	RATING
TB13	F31	6.3x32mm	10A TD
	F32	6.3x32mm	1A FA
TB14 (UPS)	F41	6.3x32mm	10A TD
	F42	6.3x32mm	1A TD
	F43	6.3x32mm	3A TD
TB23	F21	6.3x32mm	10A TD
	F22	6.3x32mm	5A TD
	F23	6.3x32mm	10A TD
	F24	6.3x32mm	10A TD
	F25	6.3x32mm	5A TD
	F26	6.3x32mm	10A TD
	F27	6.3x32mm	5A TD
	F28	6.3x32mm	10A TD
	F29	6.3x32mm	10A TD

NOTES
FA = FAST ACTING
TD = TIME DELAY

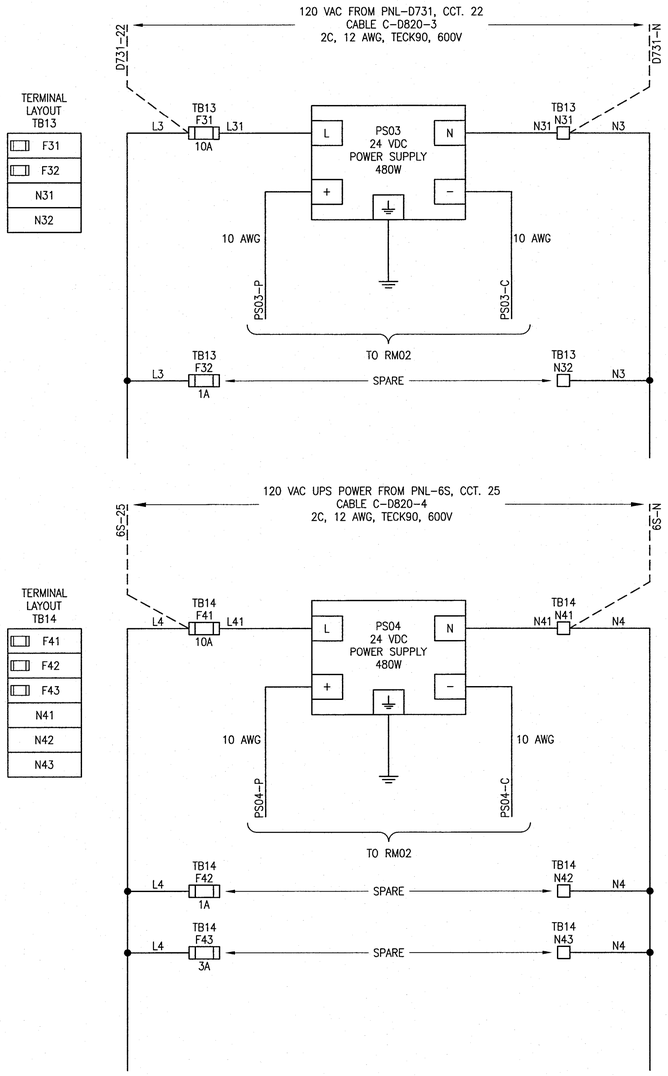

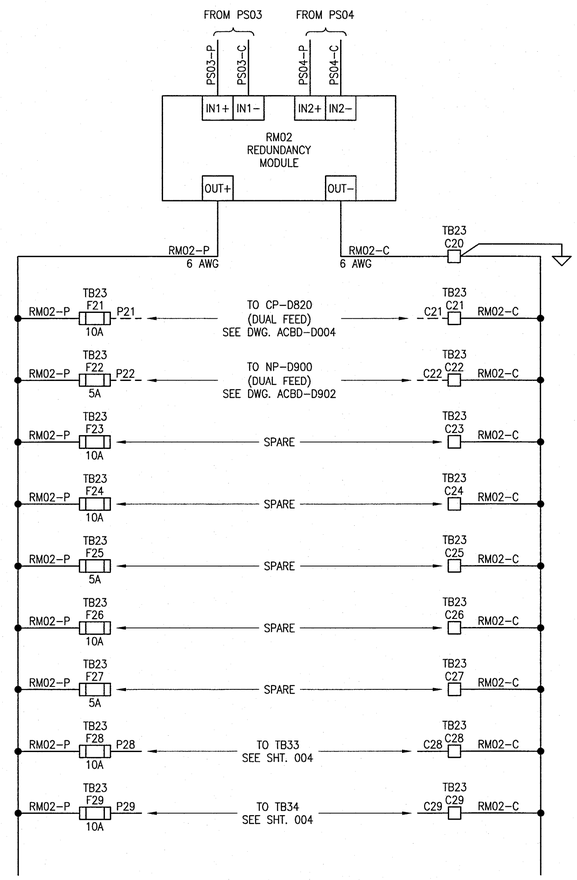

TERMINAL LAYOUT TB23

F21
F22
F23
F24
F25
F26
F27
F28
F29
C20
C21
C22
C23
C24
C25
C26
C27
C28
C29

RM02 POWER CONSUMPTION SCHEDULE AT 24 VDC

LOAD	CURRENT (mA)	NOTES
CP-D820	4824	2, 3
NP-D900	2220	2
FIT-T2207	334	1
FIT-D3113	380	1
FIT-D3151	380	1
FIT-D4043	380	1
FIT-D4163	380	1
ADP-T2601	75	1
ADP-D831	871	2
ADP-D832	1186	2
ADP-D833	640	2
CP-D821	1000	1
TOTAL	12670	

NOTES
1. BASED ON DATA SHEET.
2. DUAL FEED, LOADS INCLUDED.
3. ESTIMATED.

LEGEND:
ISOLATED GROUND
EQUIPMENT GROUND

REFERENCE DRAWINGS	DESCRIPTION
–	–

APEGM Certificate of Authorization
SNC-Lavalin Inc.
No. 4489

NO.	REVISIONS	DATE	DESIGN	CHECK
00	ISSUED FOR CONSTRUCTION – 976-2016	2017/04/05	MW	PC

CH2MHILL. SNC·LAVALIN KGS GROUP

DESIGNED BY: M. WANG	CHECKED BY: P. CHICATUN
DRAWN BY: B. DE GUZMAN	APPROVED BY: E. RYCZKOWSKI
SCALE: NTS	ISSUED FOR CONSTRUCTION BY: J. SHUMKA
DATE: 2016/08/15	DATE: 2017/04/05
CONSULTANT NO.: 474248	

ENGINEER'S SEAL
PROVINCE OF MANITOBA
CHICATUN Member 30307
REGISTERED PROFESSIONAL ENGINEER
Apr 4/2017
Revised

Winnipeg
THE CITY OF WINNIPEG
WATER AND WASTE DEPARTMENT

SOUTH END WATER POLLUTION CONTROL CENTRE
SEWPCC UPGRADING/EXPANSION PROJECT
AUTOMATION – POWER DISTRIBUTION SCHEMATIC
FERMENTERS/THICKENERS/BIOFILTERS
PSP-D820 POWER SUPPLY CABINET

CITY DRAWING NUMBER	SHEET	REV.	SIZE
1-0102-ACBD-D002	002	00	A1

LAST SAVE: 2017/04/01 – 10:11am
PATH: C:\pw_workdir\ch2mhill_wbg\sh0143264\d0356273\1-0102-ACBD-D002-002.dwg

PLOT DATE: Apr 01, 2017 – 10:11am
FILE NAME:1-0102-ACBD-D002-002.dwg