A1 SIZE – 594mm x 841mm

FUSE SCHEDULE

TB	IDENTIFIER	SIZE	RATING
TB20	F0200	5x20mm	5A TD
	F0201A	5x20mm	0.5A FA
	F0201B	5x20mm	0.5A FA
	F0202A	5x20mm	0.5A FA
	F0202B	5x20mm	0.5A FA
	F0203A	5x20mm	0.5A FA
	F0203B	5x20mm	0.5A FA
	F0204A	5x20mm	0.5A FA
	F0204B	5x20mm	0.5A FA
	F0205A	5x20mm	0.5A FA
	F0205B	5x20mm	0.5A FA
	F0206	5x20mm	5A FA
	F0207	5x20mm	5A FA
	F0208	5x20mm	5A FA
	F0209	5x20mm	5A FA
	F0210	5x20mm	5A FA
	F0211	5x20mm	5A FA
	F0212	5x20mm	1A FA
	F0213	5x20mm	1A FA
	F0214	5x20mm	1A FA
	F0215	5x20mm	1A FA
	F0216	5x20mm	1A FA
TB21	F0300	5x20mm	5A TD
	F0301	5x20mm	5A FA
	F0302	5x20mm	5A FA
	F0303	5x20mm	5A FA
TB22	F2871	5x20mm	1A FA
	F2872	5x20mm	1A FA
	F2873	5x20mm	1A FA

NOTES
FA = FAST ACTING
TD = TIME DELAY

CP-D821 POWER CONSUMPTION SCHEDULE AT 24 VDC FROM RM01

LOAD	QTY.	CURRENT (mA)	SUBTOTAL (mA)	NOTES
RIO-D800-1.R0	1	1650	1650	1
RIO-D800-1.R1	1	1650	1650	1
DISCRETE INPUTS	128	2.5	320	2
DISCRETE OUTPUTS	48	50	2400	3
ANALOG INPUTS	16	20	320	3
TOTAL			6340	

NOTES
1. BASED ON MAXIMUM SUPPLY CURRENT ON POWER SUPPLY DATA SHEET.
2. BASED ON DATA SHEET.
3. ESTIMATED.

CP-D821 POWER CONSUMPTION SCHEDULE AT 24 VDC FROM RM02

LOAD	QTY.	CURRENT (mA)	SUBTOTAL (mA)	NOTES
LED24V15	2	500	1000	1
TOTAL			1000	

NOTES
1. BASED ON MAXIMUM SUPPLY CURRENT ON POWER SUPPLY DATA SHEET.

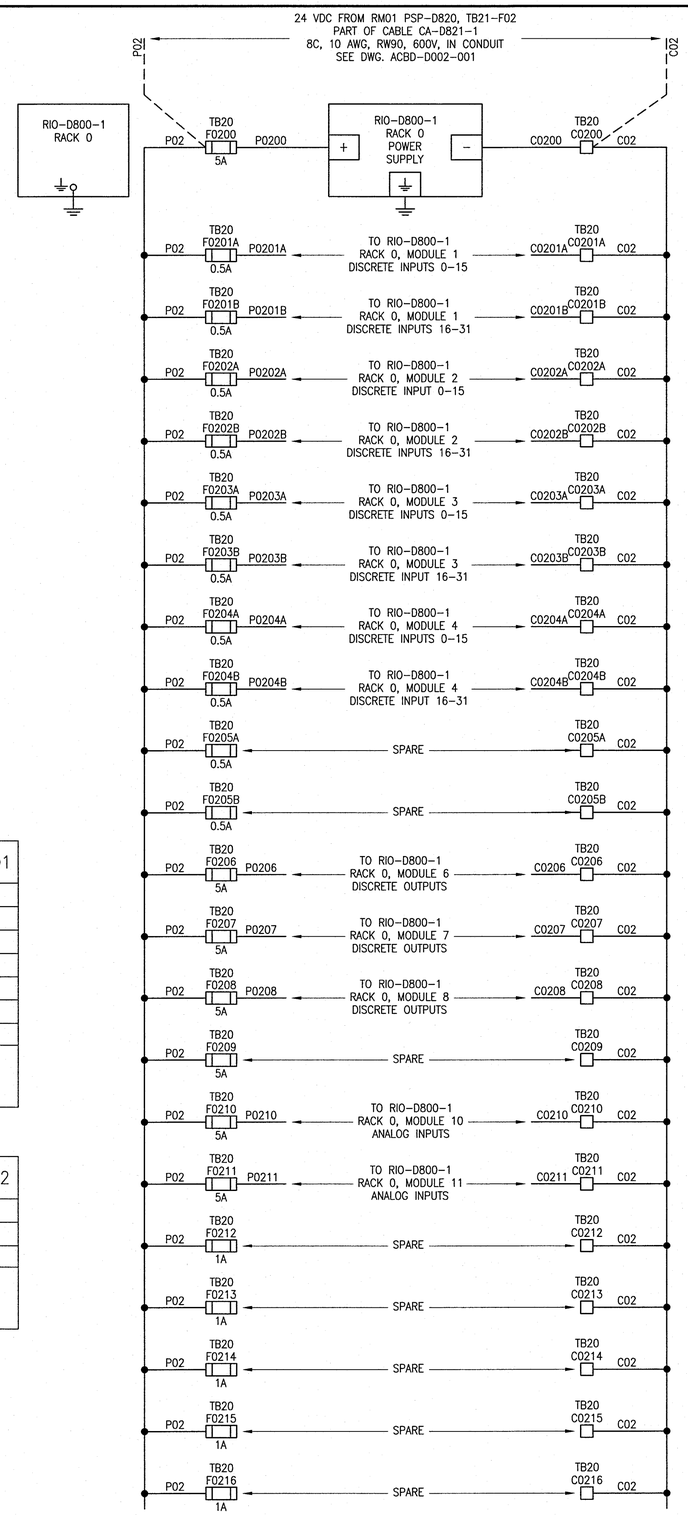

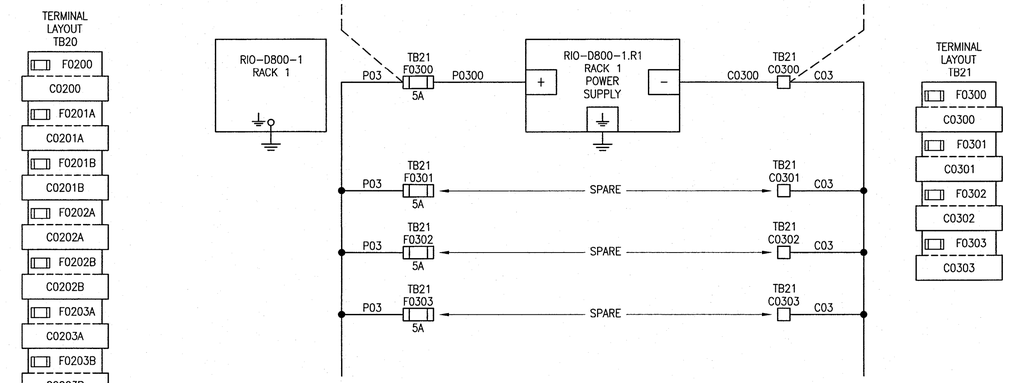

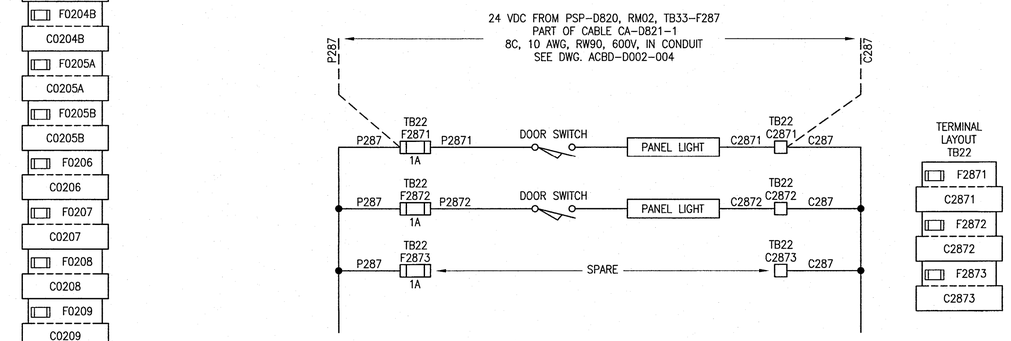

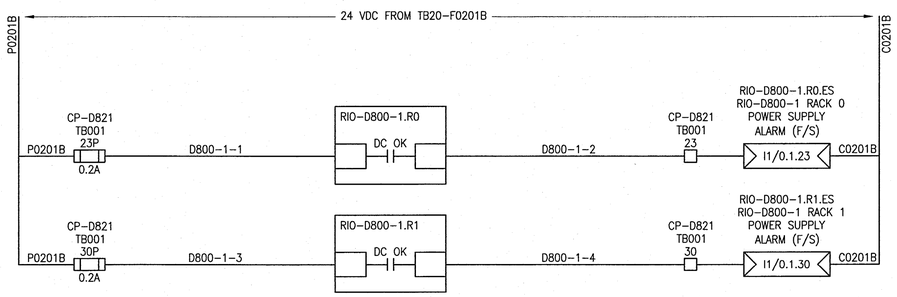

LEGEND:

- CP-D821 TERMINAL
- EQUIPMENT GROUND

REFERENCE DRAWINGS	DESCRIPTION
–	–

APEGM Certificate of Authorization
SNC-Lavalin Inc.
No. 4489

NO.	REVISIONS	DATE	DESIGN	CHECK
00	ISSUED FOR CONSTRUCTION – 976-2016	2017/04/05	MW	PC

CH2MHILL. SNC·LAVALIN KGS GROUP

DESIGNED BY: M. WANG	CHECKED BY: P. CHICATUN
DRAWN BY: B. DE GUZMAN	APPROVED BY: E. RYCZKOWSKI
SCALE: NTS	ISSUED FOR CONSTRUCTION BY: J. SHUMKA
DATE: 2016/08/16	DATE: 2017/04/05
CONSULTANT NO.: 474248	

ENGINEER'S SEAL
PROVINCE OF MANITOBA
CHICATUN Member 30307
REGISTERED PROFESSIONAL ENGINEER
APR 4/2017
Rev.00

Winnipeg
THE CITY OF WINNIPEG
WATER AND WASTE DEPARTMENT

SOUTH END WATER POLLUTION CONTROL CENTRE
SEWPCC UPGRADING/EXPANSION PROJECT
AUTOMATION – POWER DISTRIBUTION SCHEMATIC
FERMENTERS/THICKENERS/BIOFILTERS
CP-D821, PROCESS RIO CABINET – RIO-D800-1

CITY DRAWING NUMBER	SHEET	REV.	SIZE
1-0102-ACBD-D011	001	00	A1

PLOT DATE: Apr 01, 2017 – 10:11am
FILE NAME: 1-0102-ACBD-D011.dwg

LAST SAVE: 2017/04/01 – 10:11am
PATH: C:\pw_workdir\ch2mhill_wbq\sht043264\d0356273\1-0102-ACBD-D011.dwg