A1 SIZE – 594mm x 841mm

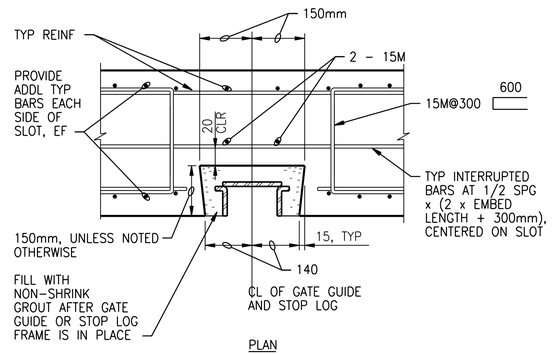

PLAN
(BASE SLAB SECTION SIMILAR)

FLUSH BLOCKOUT

NOTES:

1. FLUSH BLOCKOUT TYPICAL UNLESS OTHERWISE NOTED OR SHOWN ON PLANS.
2. REINFORCEMENT DETAILS ARE FOR BLOCKOUT AT STRAIGHT RUN WALL. MODIFY TO FIT CONDITIONS OF WALL SHOWN ON PLANS.
3. WALL BLOCKOUT SHOWN. BLOCKOUT CONTINUES THROUGH CHANNEL BASE SLAB. REINFORCE BASE SLAB SIMILARLY.

BLOCKOUT FOR STOP LOG OR GATE GUIDE

NTS (0330-076A)

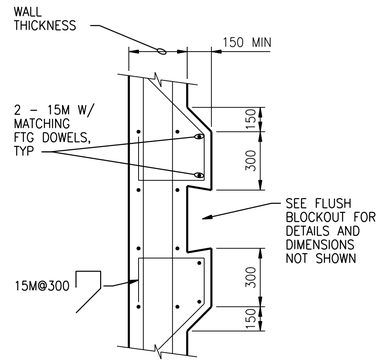

PLAN

RAISED BLOCKOUT

NOTE:

1. STOP PIERS AT UNDERSIDE OF GRATING

STOP LOG/GATE GUIDE

NTS (0330-076B)

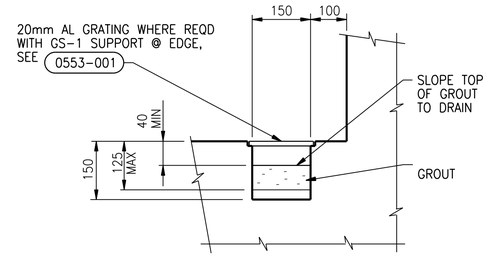

NOTES:

1. PROVIDE GRATING WHERE GUTTER CROSSES WALKWAY OR WORKING AREAS.
2. WHERE TRENCH IS ADJACENT TO WALL DO NOT PROVIDE GRATING UNLESS SPECIFICALLY SHOWN.

FORMED CONCRETE TRENCH

NTS (0330-077)

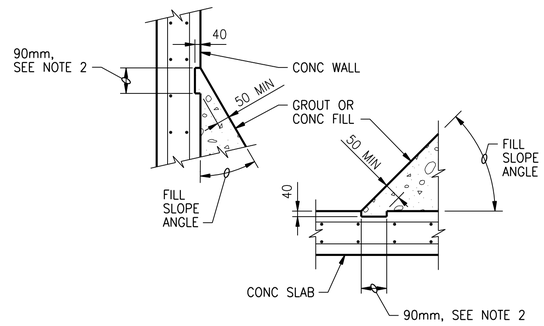

NOTES:

1. PROVIDE KEY FOR ALL FILL WHERE FILL SLOPE ANGLE TO WALL OR SLAB IS LESS THAN 45 DEGREES.
2. LENGTHEN 90mm BLOCKOUT AS REQUIRED TO MAINTAIN 50mm MINIMUM THICKNESS OF GROUT OR CONCRETE FILL.

CONCRETE OR GROUT FILL KEY

NTS (0330-078)

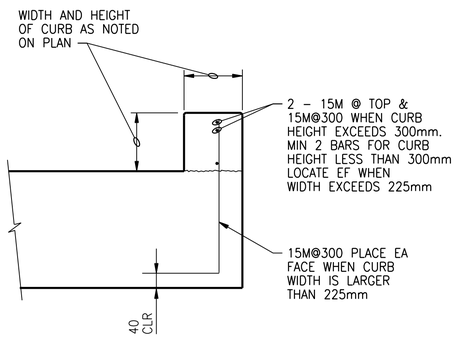

CONCRETE CURB

NTS (0330-080)

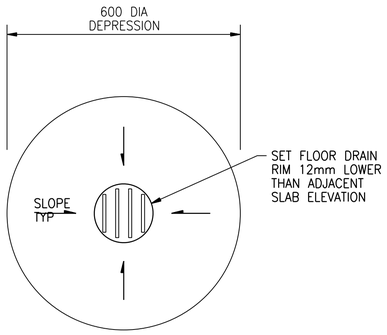

FLOOR DRAIN

NTS (0330-082)

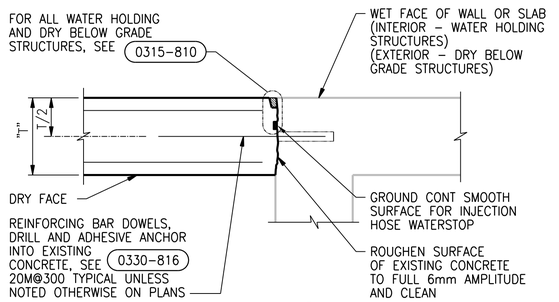

WALL – PLAN

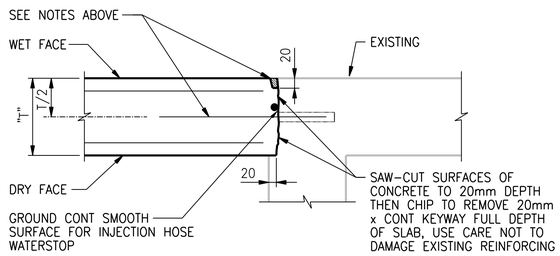

SLAB – SECTION

CONNECTION OF NEW CONCRETE TO EXISTING

NTS (0330-101)

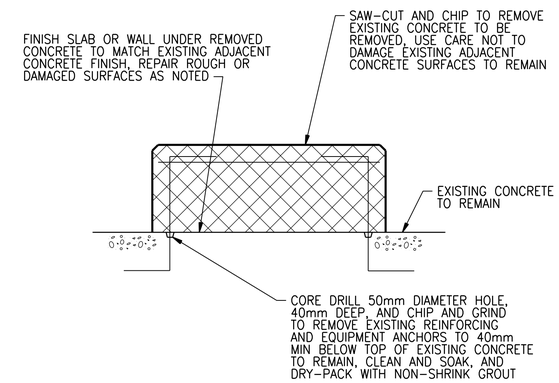

NOTES:

1. REMOVE CONCRETE OUT TO SOUND CONCRETE.
2. IF CHIPPING INTO THE SURFACE OF THE EXISTING SLAB OR WALL TO REMAIN IS REQUIRED, MAKE EDGES PERPENDICULAR TO THE SURFACE. DO NOT FEATHER EDGES.
3. FILL DEFECTIVE AREA WITH NON-SHRINK GROUT OR AN APPROVED PREPACKAGED PATCHING MATERIAL TO MATCH APPREARANCE OF ADJACENT CONCRETE SURFACES.
4. USE APPROVED BONDING AGENT ON SURFACES TO BE PATCHED PRIOR TO PLACING NON-SHRINK GROUT.
5. DEMONSTRATE METHODS FOR REPAIR USING ACTUAL MATERIALS, METHODS, AND CURING PROCEDURES REQUIRED BY MATERIAL MANUFACTURERS. CONSULT WITH BONDING AGENT MANUFACTURER AND NON-SHRINK GROUT MANUFACTURER ON TECHNIQUES.

CONCRETE DEMOLITION

NTS (0330-143)

APEGM
Certificate of Authorization
CH2M HILL Canada Ltd.
No. 1441

NO.	REVISIONS	DATE	DESIGN	CHECK
02	ISSUED FOR CONSTRUCTION – 976-2016	2017/04/05	G.O.	J.C.
01	ISSUED FOR CONSTRUCTION	10/2015	G.O.	J.C.
00	ISSUED FOR TENDER	08/2015	G.O.	J.C.

PLOT DATE: 2017\03\29

CH2MHILL
SNC·LAVALIN
KGS GROUP

DESIGNED BY: J. THANNICKAL
CHECKED BY: E. LUI
DRAWN BY: G.OMORI
APPROVED BY: H.T. FREIHAMMER
SCALE: NTS
ISSUED FOR CONSTRUCTION BY: J. SHUMKA
DATE: 2017/04/05
DATE: 2017/04/05
CONSULTANT NO.: 474248

ENGINEER'S SEAL
APR 5, 2017
PROVINCE OF MANITOBA
LUI
Member
37003
REGISTERED PROFESSIONAL ENGINEER

Winnipeg
THE CITY OF WINNIPEG
WATER AND WASTE DEPARTMENT

SOUTH END WATER POLLUTION CONTROL CENTRE
SEWPCC UPGRADING/EXPANSION PROJECT
STRUCTURAL
STANDARD DETAILS (5)

CITY DRAWING NUMBER	SHEET	REV.	SIZE
1-0102-SDTL-A006		02	A1

FILE NAME: 1-0102-SDTL-A006.dgn

©CH2M HILL 2017. ALL RIGHTS RESERVED.