B SIZE – 279mm x 432mm

FIELD	PSP–D820

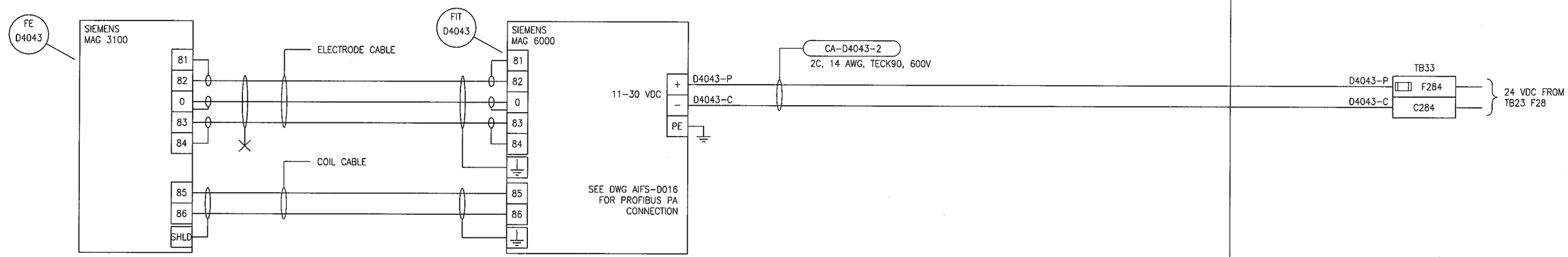

SNC·LAVALIN CH2MHILL. KGS GROUP CONSULTING ENGINEERS

NO.	REVISIONS	DATE	DESIGN	CHECK
00	ISSUED FOR CONSTRUCTION – 976–2016	2017/04/05	SSB	TMC

APEGM Certificate of Authorization
SNC-Lavalin Inc.
No. 4489

DESIGNED BY: S. BOGHOSIAN	CHECKED BY: T. CHURCH
DRAWN BY: G. WILLIAMSON	APPROVED BY: E. RYCZKOWSKI
SCALE: NTS	DATE: 2016/11/21
ISSUED FOR CONSTRUCTION BY: J. SHUMKA	DATE: 2017/04/05
CONSULTANT NO.: 474248	

ENGINEER'S SEAL
PROVINCE OF MANITOBA
T.M. CHURCH
Member
32682
REGISTERED PROFESSIONAL ENGINEER
Apr. 4, 2017

Winnipeg
THE CITY OF WINNIPEG
WATER AND WASTE DEPARTMENT

SOUTH END WATER POLLUTION CONTROL CENTRE
SEWPCC UPGRADING/EXPANSION PROJECT
AUTOMATION – LOOP DIAGRAM
FIT–D4043
WAS TO RDT–D404 FLOW TRANSMITTER

CITY DRAWING NUMBER	SHEET	REV.	SIZE
1–0102–AILD–D406	001	00	B

LAST SAVE: 2017/04/01 – 9:55am
PATH: C:\pw_workdir\ch2mhill_wbg\sh043264\d0356273\1–0102–AILD–D406.dwg

PLOT DATE: Apr 01, 2017 – 9:55am
FILE NAME: 1–0102–AILD–D406.dwg