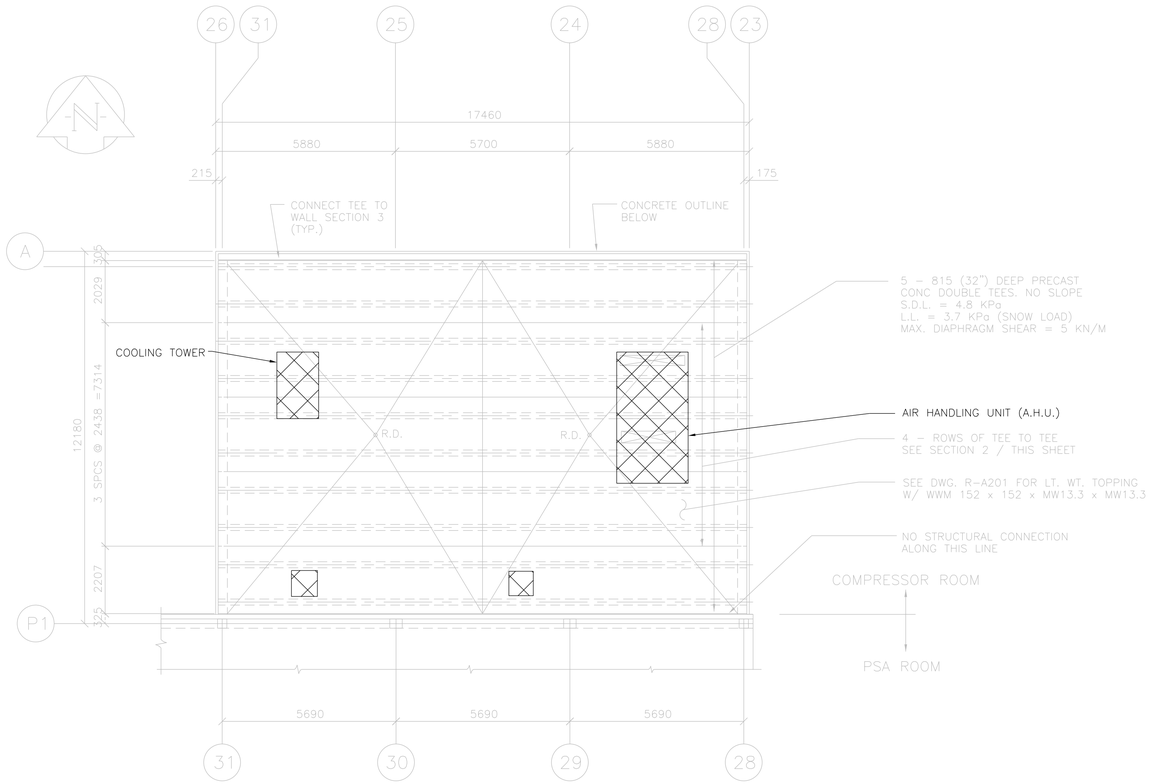

1 ROOF PLAN EL. 240.792
S204 S203 1:100

– LOADS ARE UNFACTORED U/NOTED
– ROOF MOUNTED MECH. EQUIPMENT
A.H.U. – 18 KN
COOLING TOWER – 11 KN

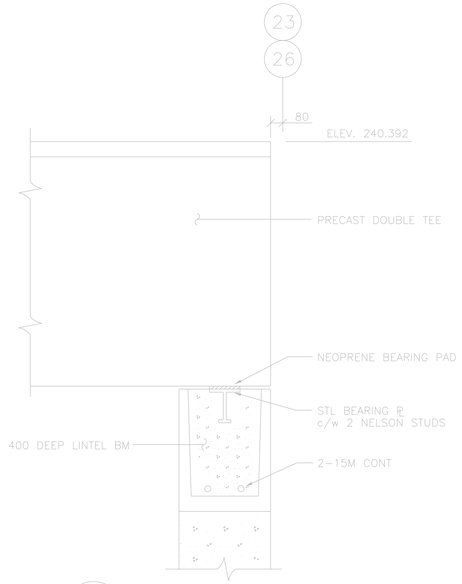

4 DETAIL
S204 S203 1:10

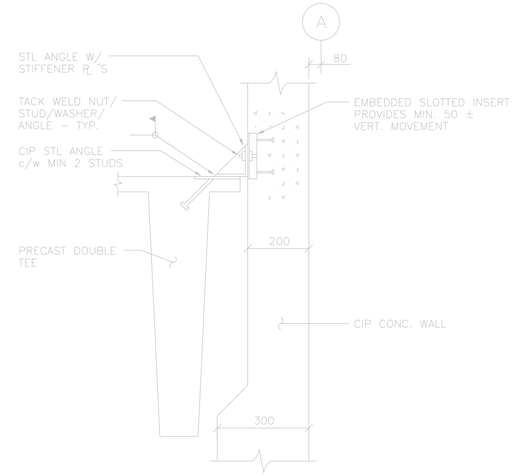

CONNECTION DESIGNED FOR 15.0 KN SHEAR
12.0 KN TENSION OF COMPRESSION
MAX. SPACING 3000 O.C.

3 FLANGE TO CONC. WALL CONNECTION
S204 S203 1:10

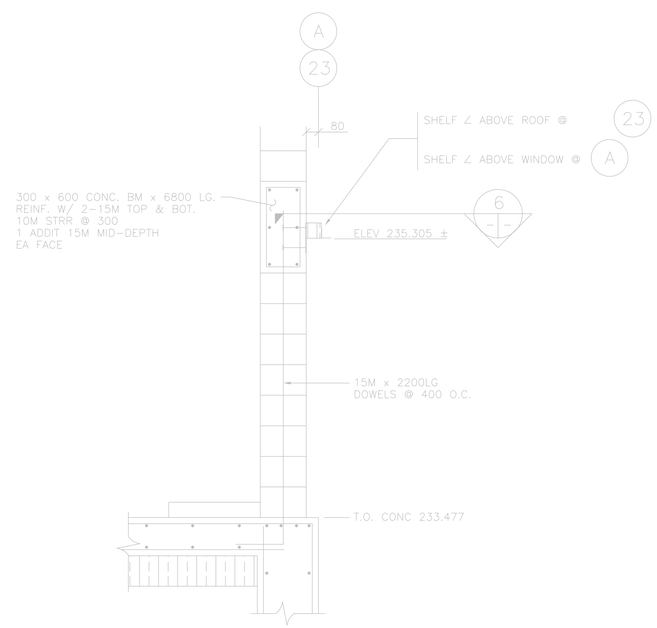

5 SECTION
S202 S203 1:20

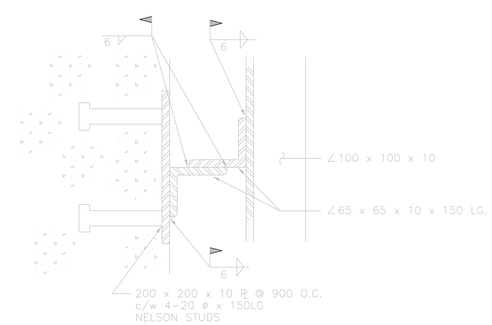

6 SECTION
1:5

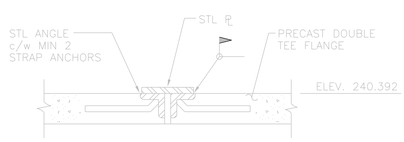

CONNECTION DESIGNED FOR 15.0 KN SHEAR
MAX. SPACING 3000 O.C.

2 TEE TO TEE CONNECTION
S204 S203 1:5

KEY PLAN
N.T.S.

AS CONSTRUCTED
DATE SEPTEMBER 1993 BY C.J.A.
APPROVED BY

NO.	REVISIONS	DATE	BY
	B.M. ELEV.		
00	ISSUED FOR CONSTRUCTION – 975-2016	04/05/2017	K.F.

MacLAREN ENGINEERS INC.
WARDROP ENGINEERING INC.
ENGINEERING CONSULTANTS

DESIGNED BY	J.F.	CHECKED BY	
DRAWN BY	S.B. /CAD	APPROVED BY	
HOR. SCALE: VERTICAL:	1:100	RELEASED FOR CONSTRUCTION:	
DATE	90-03-23	DATE	

ORIGINALLY DESIGNED BY
ENGINEER APR 5th, 2017
PROVINCE OF MANITOBA
LUI
Member
37003
REGISTERED PROFESSIONAL ENGINEER
CONSULTANT DRAWING NO.
870012-01-22-R-S203

THE CITY OF WINNIPEG
WORKS AND OPERATIONS DIVISION
WATERWORKS, WASTE & DISPOSAL DEPARTMENT

SOUTH END WATER POLLUTION CONTROL CENTRE
PSA EXPANSION – STRUCTURAL
ROOF PLAN – ELEV. 240.792
DETAILS

CITY DRAWING NUMBER
SHEET OF
SEP – 369