A1 SIZE – 594mm x 841mm

PANEL ID:	AMPS:	VOLTS:	PHASE:	WIRE:	
PANELBOARD '2R'	225	208/120V	3ø	4	SURF. MOUNT [X] TOP FED [X] FLUSH MOUNT [ ] BOT. FED [ ]

DESCRIPTION:
LOCATION: OXYGEN REACTOR ELEC. ROOM
MFG / MODEL: WESTINGHOUSE PRL 1
INTERRUPTING RATING: 10KA
MAIN BREAKER:
INST. SETTINGS: N/A

CCT.	DESCRIPTION	NOTE	WIRE (AWG)	BRKR AMPS	LOAD (VA)	A	B	C	LOAD (VA)	BRKR AMPS	WIRE (AWG)	NOTE	DESCRIPTION	CCT.
1	REACTOR 3/4 PSV HEAT TRACE		–	15	–				–	15	–		REACTOR 1/2 – PSV HEAT TRACE	2
3	REACTOR #1 – VENT GAS HEAT TRACE		–	15	–				–	15	–		VENT GAS ANALYZER	4
5	SPARE		–	15	–				–	15	–		SPARE	6
7	SPARE		–	15	–				–	15	–		LEL ANALYZER	8
9	CONDUCTIVITY METER – NORTH SIDE R466-CS		–	15	–				–	15	–		CONDUCTIVITY METER – SOUTH SIDE R463-CS	10
11	SPARE		–	15	–				–	15	–		PSA SKID #2	–
13	CHEMICAL SYSTEM – SPARE CIRCUIT		–	15	–				–	15	–		CHEMICAL SYSTEM – SPARE CIRCUIT	14
15	CHEMICAL SYSTEM NORTH – RECEPTACLE		–	15	–				–	15	–		CHEMICAL SYSTEM SOUTH – RECEPTACLE	16
17	TRIM HEATER		–	15	–				–	15	–		LOX HEATERS AND HEAT TRACE	18
19	RECEPTACLE – LOX PEDESTAL		–	15	–				–	15	–		SPARE	20
21	PSA SKID #1		–	15	–				–	15	–		REACTOR #1 LEL – HEAT TRACE	22
23	REACTOR #2 LEL – HEAT TRACE		–	15	–				–	15	–		REACTOR #2 VENT GAS HEAT TRACE	24
25	REACTOR #3 LEL – HEAT TRACE		–	15	–				–	15	–		REACTOR #3 VENT GAS HEAT TRACE	26
27	REACTOR #4 LEL – HEAT TRACE		–	15	–				–	15	–		REACTOR #4 VENT GAS HEAT TRACE	28
29	FDP-R		–	100	–				–	20	–		R243 TEMRO 1 HEATER	30
31			–		–				–	20	–		R243 BLANKET HEATER	32
33	SPACE		–	15	–				–	20	–		R243 TEMRO 2 HEATER	34
35	SPACE		–	15	–				–	15	–		SPACE	36
37	SPACE		–	15	–				–	15	–		SPACE	38
39	SPACE		–	15	–				–	15	–		SPACE	40
41	SPACE		–	15	–				–	15	–		SPACE	42

TOTAL CONNECTED LOAD: – KVA
PHASE A: – kVA – A
PHASE B: – kVA – A
PHASE C: – kVA – A

NOTE LEGEND:
AFCI ARC FAULT CIRCUIT INTERRUPTOR
GFCI GROUND FAULT CIRCUIT INTERRUPTOR

NOTES:
1. ALL WIRING TO BE #– AWG RW90 IN CONDUIT UNLESS OTHERWISE NOTED.
2. PANEL "2R" IS LOCATED IN MCC "2R". SEE DRAWING E102.

1

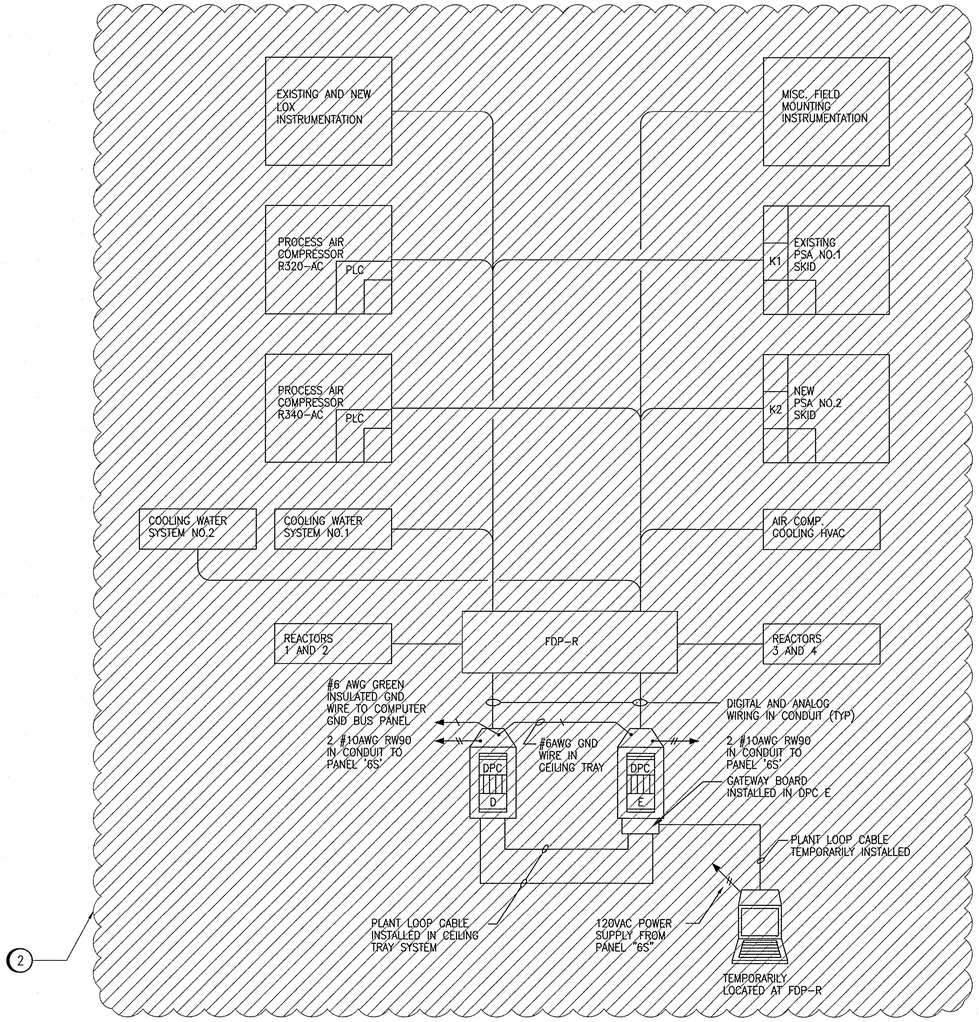

2

POWER/CONTROL WIRING RISER DIAGRAM

DEMOLITION NOTES

1. DEMOLISH PANELBOARD PNL-2R. PNL-2R IS LOCATED IN MCC-2R, WHICH IS TO BE DEMOLISHED AS WELL. ALL WIRING, CONDUIT, JUNCTIONS BOXES, ETC ASSOCIATED WITH PANELBOARD TO BE REMOVED. EXISTING PANELBOARD TO BE REPLACED WITH NEW PANELBOARD ASSOCIATED WITH NEW FERMENTERS AND THICKENERS EQUIPMENT.

2. DEMOLISH EXISTING FIELD DEVICE PANEL FDP-R ASSOCIATED WITH THE OXYGEN REACTORS. REFER TO EGAD-DD01.

REFERENCE DRAWINGS	DESCRIPTION
--	--

APEGM Certificate of Authorization
SNC-Lavalin Inc.
No. 4489

NO.	REVISIONS	DATE	DESIGN	CHECK
00	ISSUED FOR CONSTRUCTION – 976-2016	2017/04/05	WE	DEB

CH2MHILL. SNC·LAVALIN KGS GROUP

DESIGNED BY: V. ELIMBAN	CHECKED BY: E. RYCZKOWSKI
DRAWN BY: MJ. PERSSON	APPROVED BY: D. BECKER
SCALE: NTS	ISSUED FOR CONSTRUCTION BY: J. SHUMKA
DATE: 2016/06/17	DATE: 2017/04/05
CONSULTANT NO.: 474248	

ENGINEER'S SEAL
PROVINCE OF MANITOBA
D.E. BECKER
Member
23646
REGISTERED PROFESSIONAL ENGINEER
April 5/2017

Winnipeg
THE CITY OF WINNIPEG
WATER AND WASTE DEPARTMENT

SOUTH END WATER POLLUTION CONTROL CENTRE
SEWPCC UPGRADING/EXPANSION PROJECT
ELECTRICAL – DEMOLITION
FERMENTERS/THICKENERS
PANEL SCHEDULES & DETAILS

CITY DRAWING NUMBER	SHEET	REV.	SIZE
1-0102-ESCH-DD01	001	00	A1

PLOT DATE: Mar 24, 2017 – 2:24pm
FILE NAME:1-0102-ESCH-DD01.dwg

LAST SAVE: 2017/03/24 – 2:24pm
PATH: C:\Users\persm2\DWG\1-0102-ESCH-DD01.dwg