B SIZE – 279mm x 432mm

FIELD	PSP–D820

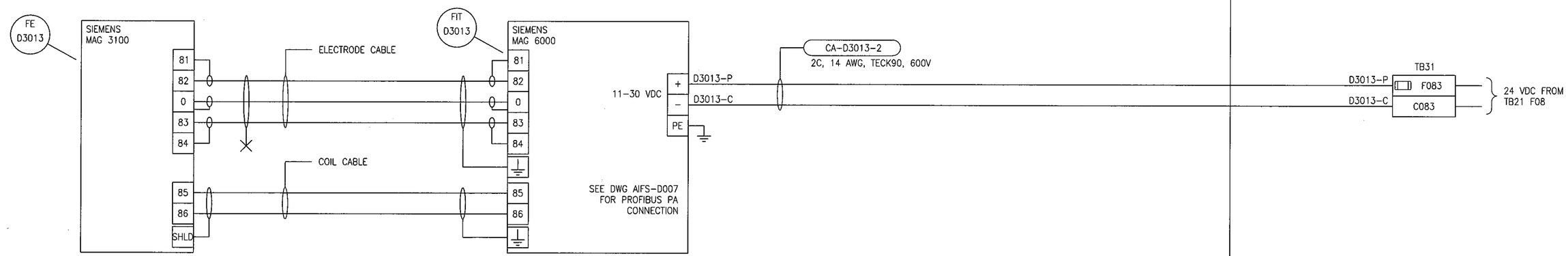

SNC·LAVALIN CH2MHILL KGS GROUP CONSULTING ENGINEERS

NO.	REVISIONS	DATE	DESIGN	CHECK
00	ISSUED FOR CONSTRUCTION – 976–2016	2017/04/05	SSB	TMC

DESIGNED BY: S. BOGHOSIAN	CHECKED BY: T. CHURCH
DRAWN BY: G. WILLIAMSON	APPROVED BY: E. RYCZKOWSKI
SCALE: NTS	DATE: 2016/11/21
ISSUED FOR CONSTRUCTION BY: J. SHUMKA	DATE: 2017/04/05
CONSULTANT NO.: 474248	

ENGINEER'S SEAL

PROVINCE OF MANITOBA
T. M. CHURCH
Member
32682
REGISTERED PROFESSIONAL ENGINEER
Apr. 4, 2017

APEGM Certificate of Authorization
SNC-Lavalin Inc.
No. 4489

Winnipeg

THE CITY OF WINNIPEG
WATER AND WASTE DEPARTMENT

SOUTH END WATER POLLUTION CONTROL CENTRE
SEWPCC UPGRADING/EXPANSION PROJECT
AUTOMATION – LOOP DIAGRAM
FIT–D3013
FERMENTER TRAIN 1 FLUSHING WATER FLOW TRANSMITTER

CITY DRAWING NUMBER	SHEET	REV.	SIZE
1–0102–AILD–D301	001	00	B

LAST SAVE: 2017/04/01 – 9:54am
PATH: C:\pw_workdir\ch2mhill_wbg\sh043264\d0356273\1–0102–AILD–D301.dwg

PLOT DATE: Apr 01, 2017 – 9:54am

FILE NAME: 1–0102–AILD–D301.dwg