A1 SIZE – 594mm x 841mm

600 VOLT MOTOR CONTROL CENTER – MCC 1R

CONNECTED kW: 450
DEMAND kW: 400

MCC NUMBER	EQUIP. NUMBER	MOTOR						STARTER		FEEDER			CIRCUIT PROTECTION		REMARKS
		DESCRIPTION	LOCATION	HP	KW	FULL LOAD AMPS	SERV. FACT.	EEMAC SIZE	TYPE	CAP (AMPS)	SIZE	TYPE	CONT. RATING (AMPS)	FRAME SIZE	
F1–1	R319–FN	COMPRESSOR VENT FAN	COMP R319	3	2.2	3.1	1.15	–	–	20	#12	RW90	15A–3P	HFD/CL	
F1–2		SPACE													
F1–3		SPACE													
F1–4		SPACE													
F1–5		SPACE													
F2–1	R233–MXR	MIXER FOR REACTOR 3, STAGE 1B	TANK 3–DECK	30	22.4	31	1.15	3	CMFVNR	45	#8	RW90	100A–3P	HMCP	
F2–2	R235–MXR	MIXER FOR REACTOR 3, STAGE 3	TANK 3–DECK	20	14.9	19.5	1.15	2	CMFVNR	30	#10	RW90	50A–3P	HMCP	
F2–3	R241–MXR	MIXER FOR REACTOR 4, STAGE 1A	TANK 4–DECK	30	22.4	31	1.15	3	CMFVNR	45	#8	RW90	100A–3P	HMCP	
F2–4	R243–MXR	MIXER FOR REACTOR 4, STAGE 2	TANK 4–DECK	25	18.7	26	1.15	2	CMFVNR	45	#8	RW90	50A–3P	HMCP	
F2–5	R231–PB	PURGE BLOWER FOR REACTOR 3	ROOM P127	5	3.7	5.5	1.15	1	CMFVNR	20	#12	RW90	15A–3P	HMCP	PURGE BLOWER IN PRI. CLAR. 3
F3–1	R213–MXR	MIXER FOR REACTOR 1, STAGE 1B	TANK 1–DECK	30	22.4	31	1.15	3	CMFVNR	45	#8	RW90	100A–3P	HMCP	
F3–2	R215–MXR	MIXER FOR REACTOR 1, STAGE 3	TANK 1–DECK	25	18.7	24	1.15	2	CMFVNR	45	#8	RW90	50A–3P	HMCP	
F3–3	R221–MXR	MIXER FOR REACTOR 2, STAGE 1A	TANK 2–DECK	30	22.4	31	1.15	3	CMFVNR	45	#8	RW90	100A–3P	HMCP	
F3–4	R223–MXR	MIXER FOR REACTOR 2, STAGE 2	TANK 2–DECK	25	18.7	25.2	1.15	2	CMFVNR	45	#8	RW90	50A–3P	HMCP	
F3–5	R211–PB	PURGE BLOWER FOR REACTOR 1	ROOM P110	5	3.7	5.5	1.15	1	CMFVNR	20	#12	RW90	15A–3P	HMCP	PURGE BLOWER IN PRI. CLAR. 1&2
F4–1	R463–FN	COOLING TOWER FAN	RM R101–ROOF	5	3.7	5.4/2.1	1.15	1	CMFVNR	20	#12	RW90	15A–3P	HMCP	2 SPEED REVERSING FAN
F4–2	R101–HTR	DRIOX VAPORIZER HEATERS	DRIOX PLANT		48			3	CONTACTOR	65	#6	RW90	60A–3P	HFD/CL	
F4–3		SPACE													
F4–4		10 KVAR CAPACITOR													BREAKER IN F5–1L
F5–1L		10 KVAR CAPACITOR BREAKER								20	#12	RW90	15A–3P	HFD/CL	
F5–1R		10 KVAR CAPACITOR BREAKER								20	#12	RW90	15A–3P	HFD/CL	
F5–2L		WELDING RECEPTACLE BREAKER	REACTOR DECK		60 KW			–	–	65	#6	RW90	60A–3P	HFD/CL	
F5–2R		20 KVAR CAPACITOR BREAKER								30	#10	RW90	30A–3P	HFD/CL	
F5–3		SPACE													
F5–4		20 KVAR CAPACITOR													BREAKER IN F5–2R
F6–1		SPACE													
F6–2	R319–AC	PSA AIR COMPRESSOR	ROOM R101	350	261	300	1.15	–	–	420	2–3/0 PER ?	RW90	600A–3P	HMCP	WYE–DELTA STARTER, PFC AT MOTOR
F6–3	R465–CWP	COOLING TOWER CIRCULATION PUMP	ROOM R101	7.5	5.6	8.1	1.15	1	CMFVNR	20	#12	RW90	15A–3P	HMCP	
F6–4	R461–CWP	COOLING TOWER CIRCULATION PUMP	ROOM R101	7.5	5.6	8.1	1.15	1	CMFVNR	20	#12	RW90	15A–3P	HMCP	
F6–5		10 KVAR CAPACITOR	MCC 1R												BREAKER IN F5–1R

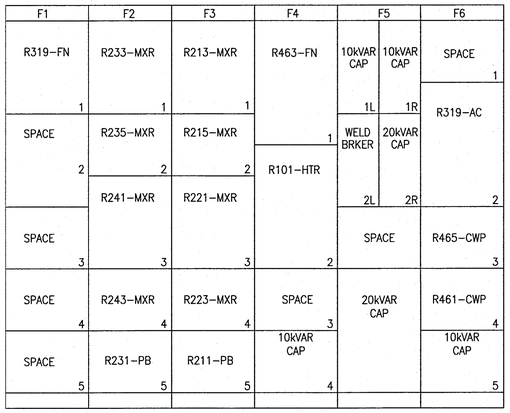

MCC 1R FRONT ELEVATION

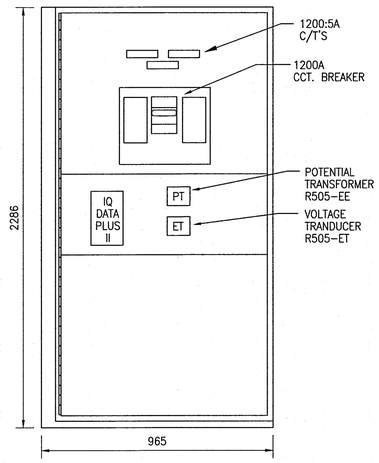

FRONT VIEW SWITCHGEAR

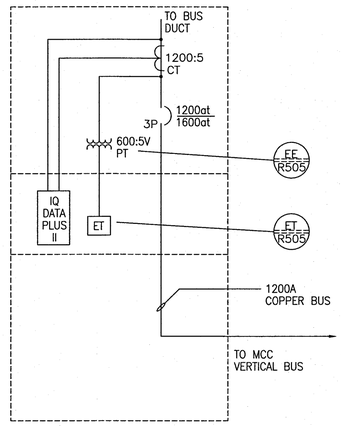

SWITCHGEAR SCHEMATIC

GENERAL NOTES:

1. THIS DRAWING IS FOR REFERENCE ONLY, AND SHOWS THE EXISTING MCC 1R LOCATED IN THE EXISTING COMPRESSOR ROOM (REFER TO EGAD–DD01 FOR LOCATION).
2. THE CONTRACTOR SHALL COMPLETELY REMOVE EXISTING MCC 1R AND MCC 2R, AND REPLACE WITH A NEW MCC (MCC–D710 AND MCC–D720).
3. DISCONNECT, REMOVE AND TURN OVER EQUIPMENT TO THE CONTRACT ADMINISTRATOR.

REFERENCE DRAWINGS	DESCRIPTION
1–0102–EGAD–D001	POWER LAYOUT, ELECTRICAL ROOM AND MECHANICAL PLATFORM
1–0102–ESLD–D001	ELECTRICAL, SINGLE LINE DIAGRAM, MCC–D710

APEGM Certificate of Authorization
SNC-Lavalin Inc.
No. 4489

NO.	REVISIONS	DATE	DESIGN	CHECK
00	ISSUED FOR CONSTRUCTION – 976–2016	2017/04/05	WE	DEB

CH2MHILL. SNC·LAVALIN KGS GROUP

DESIGNED BY: V. ELIMBAN	CHECKED BY: E. RYCZKOWSKI
DRAWN BY: MJ. PERSSON	APPROVED BY: D. BECKER
SCALE: NTS	ISSUED FOR CONSTRUCTION BY: J. SHUMKA
DATE: 2016/07/22	DATE: 2017/04/05
CONSULTANT NO.: 474248	

ENGINEER'S SEAL
PROVINCE OF MANITOBA
D.E. BECKER
Member 23646
REGISTERED PROFESSIONAL ENGINEER
April 5/ 2017

Winnipeg
THE CITY OF WINNIPEG
WATER AND WASTE DEPARTMENT

SOUTH END WATER POLLUTION CONTROL CENTRE
SEWPCC UPGRADING/EXPANSION PROJECT
ELECTRICAL – MCC/CABINETS DRAWING
FERMENTERS/THICKENERS
MCC 1R DEMOLITION

CITY DRAWING NUMBER	SHEET	REV.	SIZE
1–0102–ECBD–DD01	001	00	A1

LAST SAVE: 2017/03/24 – 2:20pm
PATH: C:\Users\persm2\DWG\1–0102–ECBD–DD01.dwg

PLOT DATE: Mar 24, 2017 – 2:20pm
FILE NAME: 1–0102–ECBD–DD01.dwg