B SIZE - 279mm x 432mm

FIELD

SPECIFIC NOTES:

1. INSTALL HAZARDOUS RATED CABLE GLAND SEAL.

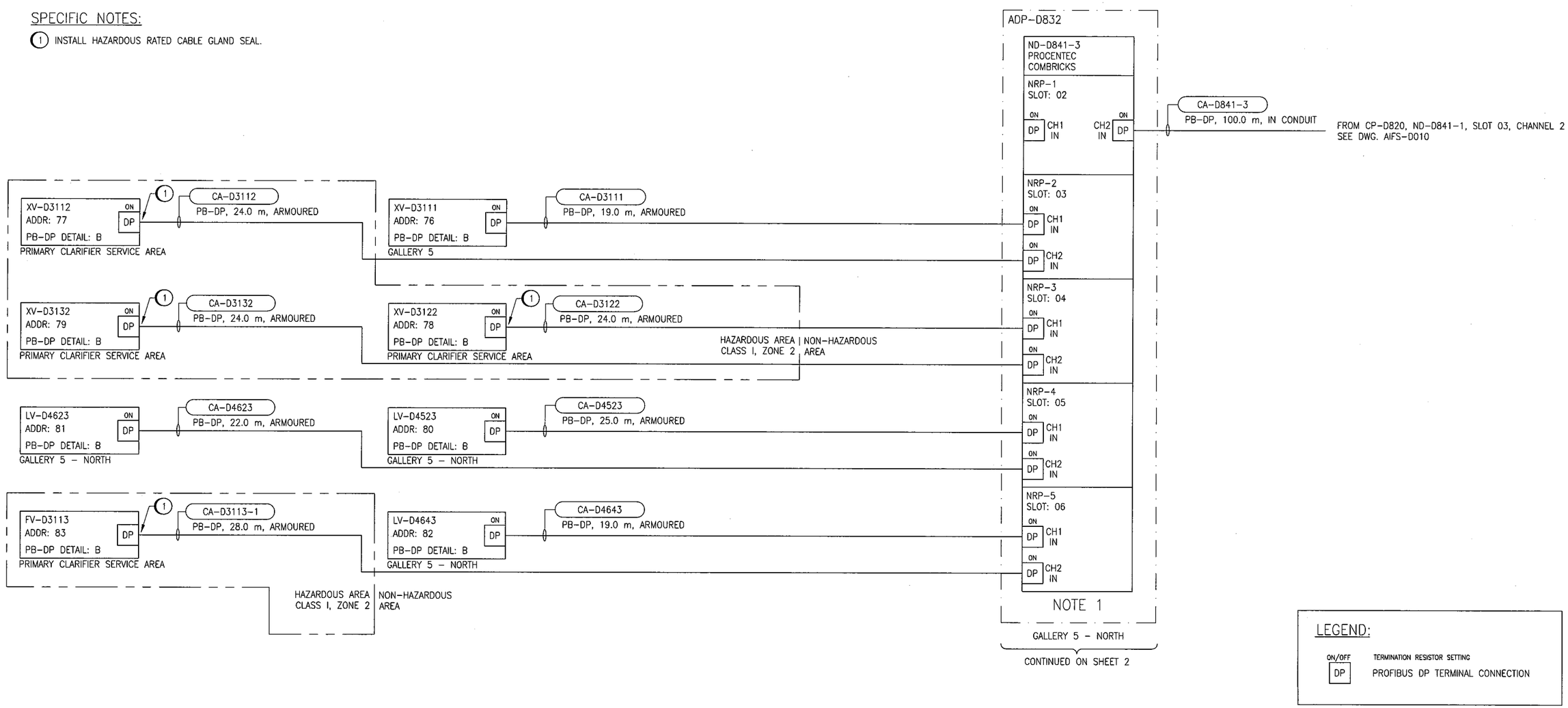

LEGEND:

ON/OFF	TERMINATION RESISTOR SETTING
DP	PROFIBUS DP TERMINAL CONNECTION

NOTES:

1. ALL PROFIBUS MODULES SET TO NETWORK 1 WITH DIP SWITCHES.
2. PROFIBUS DP NETWORK DESIGNED FOR 1.5Mbps BUT OPERATED AT 500Kbps.
3. REFER TO DWG. 1-0102-ADTL-A020 FOR PROFIBUS DP WIRING DETAILS.
4. ALL PROFIBUS PA MODULES SET TO LINK MODE.

APEGM Certificate of Authorization
SNC-Lavalin Inc.
No. 4489

SNC·LAVALIN CH2MHILL KGS GROUP CONSULTING ENGINEERS

NO.	REVISIONS	DATE	DESIGN	CHECK
00	ISSUED FOR CONSTRUCTION - 976-2016	2017/04/05	MW	PC

DESIGNED BY: M. WANG	CHECKED BY: P. CHICATUN
DRAWN BY: M. WANG	APPROVED BY: E. RYCZKOWSKI
SCALE: NTS	DATE: 2016/07/08
ISSUED FOR CONSTRUCTION BY: J. SHUMKA	DATE: 2017/04/05
CONSULTANT NO.: 474248	

ENGINEER'S SEAL
PROVINCE OF MANITOBA
P.D. CHICATUN
Member
30307
REGISTERED PROFESSIONAL ENGINEER
Apr. 4/2017
REVOD

Winnipeg
THE CITY OF WINNIPEG
WATER AND WASTE DEPARTMENT

SOUTH END WATER POLLUTION CONTROL CENTRE
SEWPCC UPGRADING/EXPANSION PROJECT
AUTOMATION - PROFIBUS SEGMENT DIAGRAM
FERMENTERS/THICKENERS/BIOFILTERS - BRANCH 2
PROFIBUS DP SEGMENT ND-D841-3

CITY DRAWING NUMBER	SHEET	REV.	SIZE
1-0102-AIFS-D012	001	00	B

LAST SAVE: 2017/04/01 - 9:51am
PATH: C:\pw_workdir\ch2mhill_wbg\sh043264\d0356273\1-0102-AIFS-D012-001.dwg

PLOT DATE: Apr 01, 2017 - 9:51am

FILE NAME: 1-0102-AIFS-D012-001.dwg