A1 SIZE – 594mm x 841mm

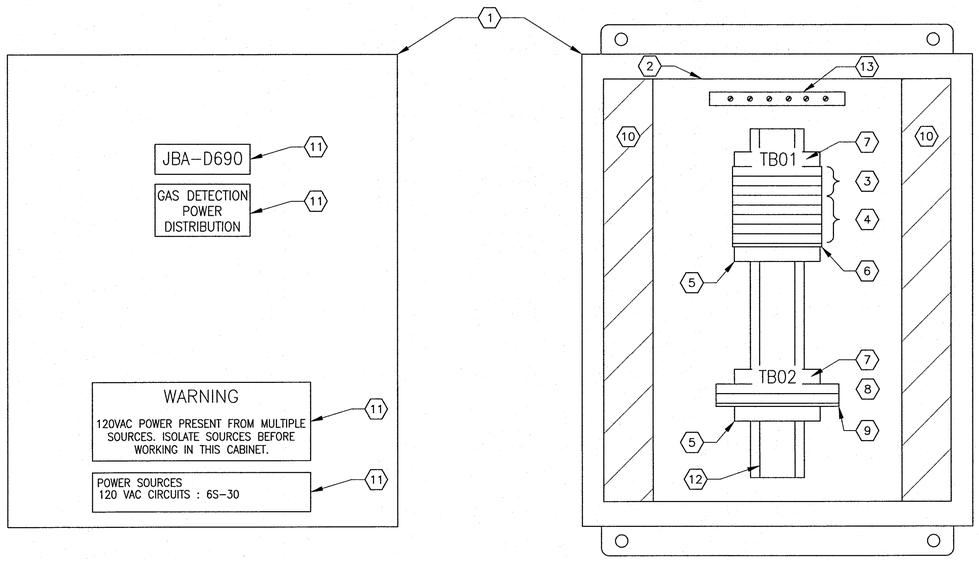

EXTERIOR PANEL VIEW
1 : 2

INTERIOR PANEL VIEW
1 : 2

JBA–D690

BILL OF MATERIAL				
ITEM	QTY	DESCRIPTION	MANUFACTURER	CATALOG NUMBER
1	1	NEMA 12 ENCL. WALL MOUNT – 305X254X127mm	HOFFMAN	A1210CH
2	1	PANEL FOR ITEM 1	HOFFMAN	A12P10
3	3	FUSED TERMINAL – UT 4 WITH FUSE PLUG – P–FU 5X20	PHOENIX CONTACT	3046142 3036806
4	5	FEED THROUGH TERMINAL – UT 4–MTD	PHOENIX CONTACT	3046184
5	AS REQ'D	TERMINAL END CLAMP – CLIPFIX 35	PHOENIX CONTACT	3022218
6	AS REQ'D	TERMINAL END PLATE – D–UT 2,5/4 TWIN	PHOENIX CONTACT	3047141
7	AS REQ'D	TERMINAL BLOCK MARKER – KLM–A	PHOENIX CONTACT	1004348
8	2	RELAY MODULE, 24 VDC, 1PDT, STANDARD, DIODE PROTECTION	PHOENIX CONTACT	2966171
9	AS REQ'D	RELAY MODULE SEPARATING PLATE	PHOENIX CONTACT	2966841
10	AS REQ'D	NARROW SLOT WIRING DUCT AND COVER, 1.26"x2.12"	PANDUIT	F1X2LG6
11	AS REQ'D	LAMACOIDS	–	–
12	AS REQ'D	35mm DIN RAIL	PHOENIX CONTACT	0801733
13	1	GROUND BAR, 6 TAPS,	ILSCO	0167–6

WIRING DIAGRAM:

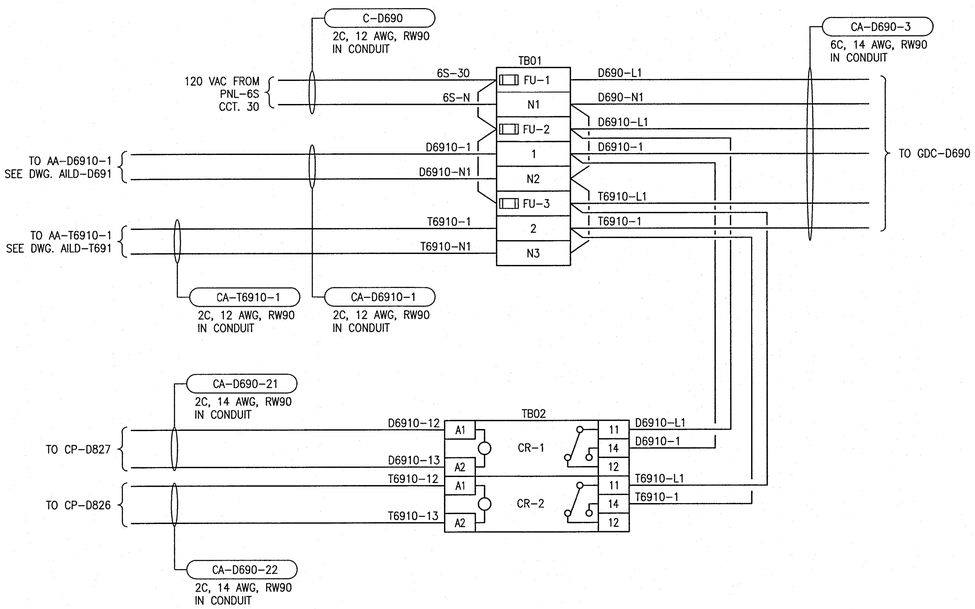

FUSE SCHEDULE	
ID	TYPE
FU–1	5A TIME DELAY
FU–2	5A TIME DELAY
FU–3	5A TIME DELAY

REFERENCE DRAWINGS	DESCRIPTION
1–0102–AILD–T691	LOOP DIAGRAM, HUMIDIFIER ROOM GAS DETECTION HORN AND STROBE
1–0102–AILD–D691	LOOP DIAGRAM, RDT ROOM GAS DETECTION HORN AND STROBES

1:2 20 0 40 80

APEGM Certificate of Authorization
SNC-Lavalin Inc.
No. 4489

NO.	REVISIONS	DATE	DESIGN	CHECK
00	ISSUED FOR CONSTRUCTION – 976–2017	2017/04/05	SSB	TMC

CH2MHILL. SNC·LAVALIN KGS GROUP

DESIGNED BY: S. BOGHOSIAN
CHECKED BY: T. CHURCH
DRAWN BY: S. BOGHOSIAN
APPROVED BY: E. RYCZKOWSKI
SCALE: 1:2
ISSUED FOR CONSTRUCTION BY: J. SHUMKA
DATE: 2016/09/06
DATE: 2017/04/05
CONSULTANT NO.: 474248

ENGINEER'S SEAL
PROVINCE OF MANITOBA
T. M. CHURCH
Member 32682
REGISTERED PROFESSIONAL ENGINEER
Apr. 3, 2017

Winnipeg
THE CITY OF WINNIPEG
WATER AND WASTE DEPARTMENT

SOUTH END WATER POLLUTION CONTROL CENTRE
SEWPCC UPGRADING/EXPANSION PROJECT
AUTOMATION – CABINET LAYOUT
FERMENTERS/THICKENERS/BIOFILTERS
JBA–D690 GAS DETECTION JUNCTION BOX

CITY DRAWING NUMBER	SHEET	REV.	SIZE
1–0102–ACBD–D082	001	00	A1

LAST SAVE: 2017/04/01 – 10:15am
PATH: C:\pw_workdir\ch2mhill_wbg\sh043264\d0356273\1–0102–ACBD–D082.dwg

PLOT DATE: Apr 01, 2017 – 10:15am

FILE NAME: 1–0102–ACBD–D082.dwg