A1 SIZE – 594mm x 841mm

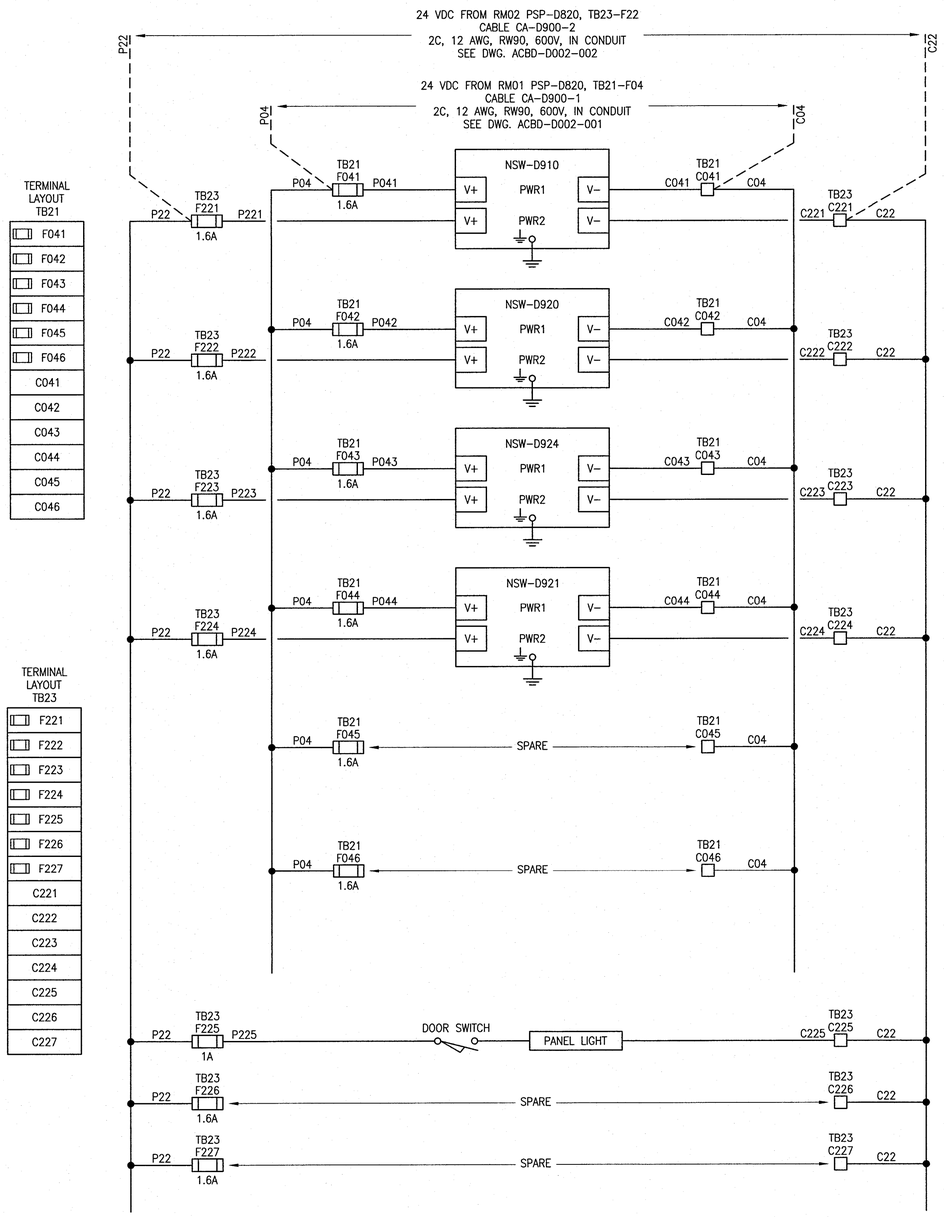

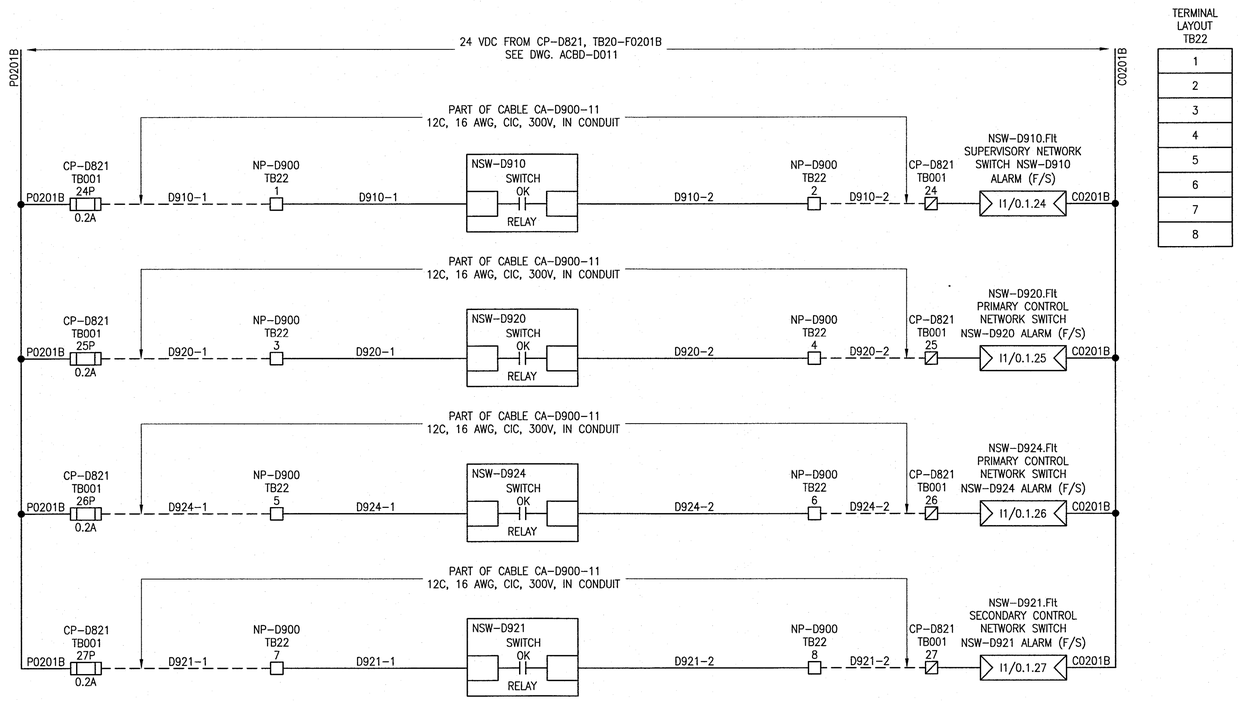

FUSE SCHEDULE

TB	IDENTIFIER	SIZE	RATED CURRENT
TB21	F041	5x20mm	1.6A FA
	F042	5x20mm	1.6A FA
	F043	5x20mm	1.6A FA
	F044	5x20mm	1.6A FA
	F045	5x20mm	1.6A FA
	F046	5x20mm	1.6A FA
TB23	F221	5x20mm	1.6A FA
	F222	5x20mm	1.6A FA
	F223	5x20mm	1.6A FA
	F224	5x20mm	1.6A FA
	F225	5x20mm	1A FA
	F226	5x20mm	1.6A FA
	F227	5x20mm	1.6A FA

NOTES
FA = FAST ACTING

NP-D900 POWER CONSUMPTION SCHEDULE AT 24 VDC

LOAD	RM01 CURRENT (mA)	RM02 CURRENT (mA)	NOTES
NSW-D910	400	400	1
NSW-D920	460	460	1
NSW-D924	460	460	1
NSW-D921	400	400	1
LED24V15	–	500	1
TOTAL	1720	2220	

NOTES
1. BASED ON DATA SHEET.

LEGEND:

- EQUIPMENT GROUND
- NP-D900 TERMINAL
- CP-D821 TERMINAL

REFERENCE DRAWINGS	DESCRIPTION
1-0102-EGAD-D002	EQUIPMENT LAYOUT, CONTROL ROOM AND AUTOMATION ROOM LAYOUT

1:5 50 0 100 200

APEGM Certificate of Authorization
SNC-Lavalin Inc.
No. 4489

NO.	REVISIONS	DATE	DESIGN	CHECK
00	ISSUED FOR CONSTRUCTION – 976-2017	2017/04/05	MW	PC

CH2MHILL. SNC·LAVALIN KGS GROUP

DESIGNED BY: M. WANG
CHECKED BY: P. CHICATUN
DRAWN BY: B. DE GUZMAN
APPROVED BY: E. RYCZKOWSKI
SCALE: AS SHOWN
ISSUED FOR CONSTRUCTION BY: J. SHUMKA
DATE: 2016/08/19
DATE: 2017/04/05
CONSULTANT NO.: 474248

ENGINEER'S SEAL
PROVINCE OF MANITOBA
CHICATUN Member 30307
REGISTERED PROFESSIONAL ENGINEER
APR. 01, 2017

THE CITY OF WINNIPEG
WATER AND WASTE DEPARTMENT

SOUTH END WATER POLLUTION CONTROL CENTRE
SEWPCC UPGRADING/EXPANSION PROJECT
AUTOMATION – POWER DISTRIBUTION SCHEMATIC
FERMENTERS/THICKENERS/BIOFILTERS
NP-D900 NETWORK CABINET

CITY DRAWING NUMBER	SHEET	REV.	SIZE
1-0102-ACBD-D902	001	00	A1

LAST SAVE: 2017/04/01 – 10:15am
PATH: C:\pw_workdir\ch2mhill_wbg\ah043264\d0356273\1-0102-ACBD-D902.dwg

PLOT DATE: Apr 01, 2017 – 10:15am
FILE NAME: 1-0102-ACBD-D902.dwg