A1 SIZE – 594mm x 841mm

GENERAL NOTES

1. REFER TO DWG. 1-0102-ECTR-D001 FOR GENERAL NOTES.
2. SECTIONS AND DETAILS SHOW GENERAL DESIGN CONCEPTS ONLY. ADJUST INSTALLATION AND MATERIALS TO REFLECT ACTUAL ON-SITE CONDITIONS / INSTALLATIONS.
3. CABLE TRAY SUPPORTS ARE NOT SHOWN ON SECTION DETAIL. CONTRACTOR TO PROVIDE ALL THE REQUIRED SUPPORTS IN ACCORDANCE WITH THE MANUFACTURER'S RECOMMENDATION AND IN ACCORDANCE WITH NEMA VE2.

SPECIFIC NOTES

(1) CABLES TO BE GROUPED AS SHOWN TO MEET THE 70% CABLE DERATING FACTOR.

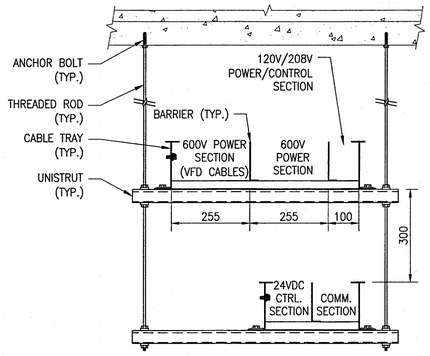

(A) TRAPEZE SUPPORT (2-TIER TRAY)
SCALE: NTS
ECTR-D001-001

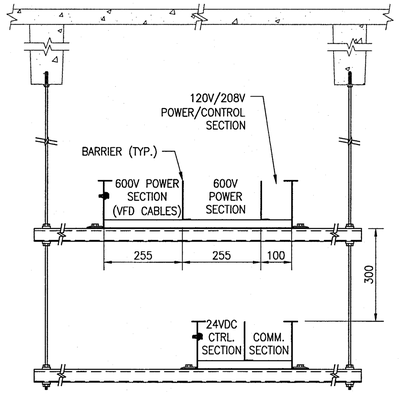

(B) TRAPEZE SUPPORT (2-TIER TRAY)
SCALE: NTS
ECTR-D001-001

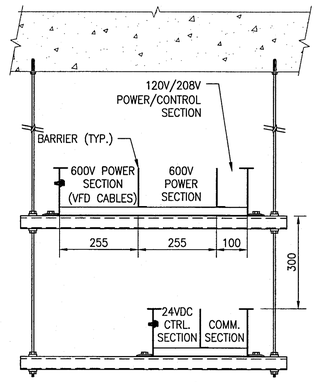

(C) TRAPEZE SUPPORT (2-TIER TRAY)
SCALE: NTS
ECTR-D001-001

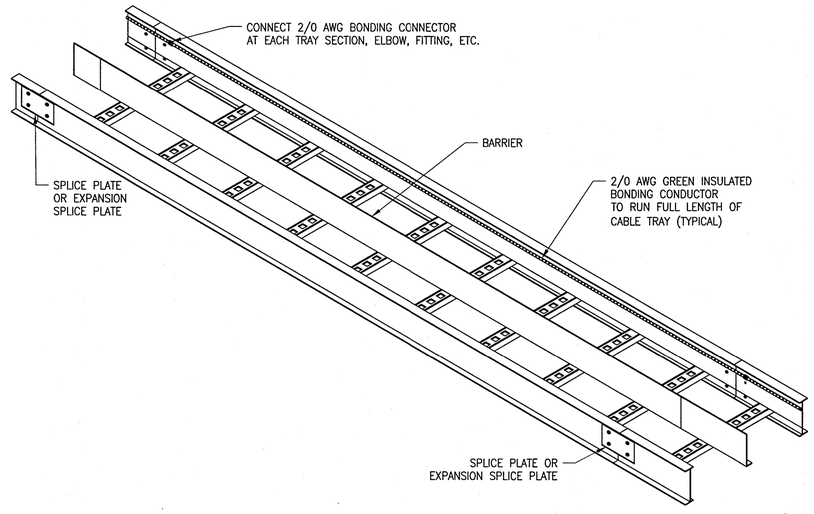

TYPICAL HORIZONTAL CABLE TRAY RUN (1 BARRIER SHOWN)
SCALE: NTS

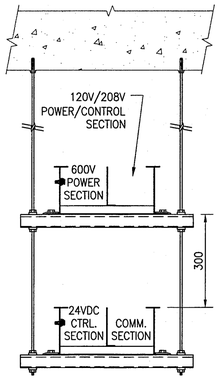

(D) TRAPEZE SUPPORT (2-TIER TRAY)
SCALE: NTS
ECTR-D001-001,002

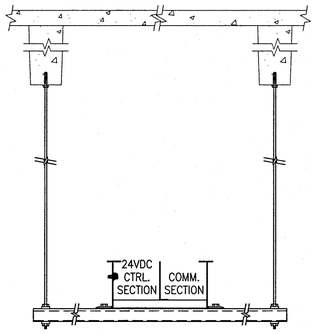

(E) TRAPEZE SUPPORT
SCALE: NTS
ECTR-D001-001

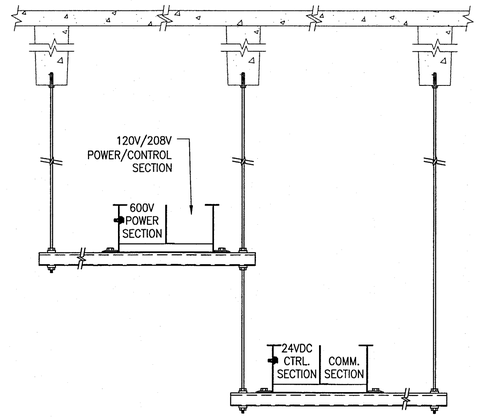

(F) TRAPEZE SUPPORT (ADJACENT TRAYS)
SCALE: NTS
ECTR-D001-002

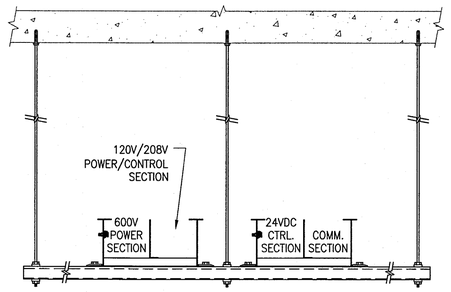

(G) TRAPEZE SUPPORT (ADJACENT TRAYS)
SCALE: NTS
ECTR-D001-002

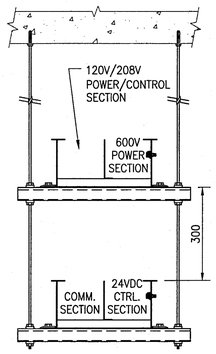

(H) TRAPEZE SUPPORT (2-TIER TRAY)
SCALE: NTS
ECTR-D001-002

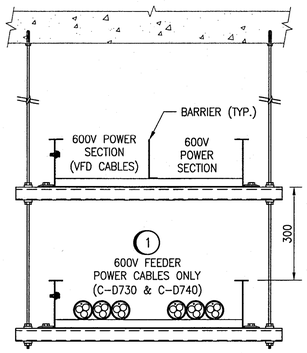

(J) TRAPEZE SUPPORT (2-TIER TRAY)
SCALE: NTS
ECTR-D001-002

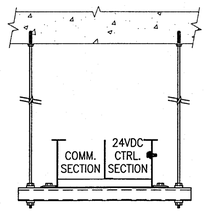

(K) TRAPEZE SUPPORT
SCALE: NTS
ECTR-D001-002

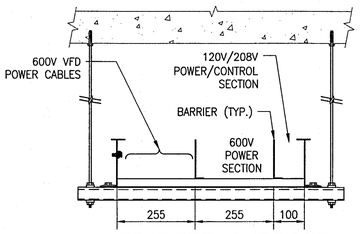

(L) TRAPEZE SUPPORT
SCALE: NTS
ECTR-D001-002

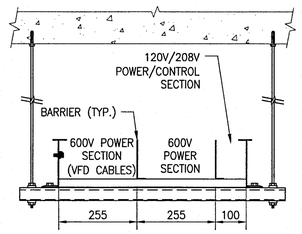

(M) TRAPEZE SUPPORT
SCALE: NTS
ECTR-D001-002

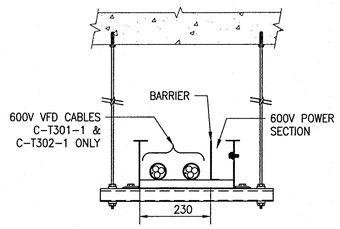

(N) TRAPEZE SUPPORT
SCALE: NTS
ECTR-D001-002

REFERENCE DRAWINGS	DESCRIPTION
1-0102-ECTR-D001	CABLE TRAY LAYOUT, FERMENTERS/THICKENERS, GROUND LEVEL PLAN

APEGM Certificate of Authorization
SNC-Lavalin Inc.
No. 4489

NO.	REVISIONS	DATE	DESIGN	CHECK
00	ISSUED FOR CONSTRUCTION – 976-2016	2017/04/05	SLJ	DEB

CH2MHILL. SNC·LAVALIN KGS GROUP

DESIGNED BY: S. JUGANAS	CHECKED BY: E. RYCZKOWSKI
DRAWN BY: S. JUGANAS	APPROVED BY: D. BECKER
SCALE: NTS	ISSUED FOR CONSTRUCTION BY: J. SHUMKA
DATE: 2016/08/18	DATE: 2017/04/05
CONSULTANT NO.: 474248	

ENGINEER'S SEAL
PROVINCE OF MANITOBA
D.E. BECKER
Member 23646
REGISTERED PROFESSIONAL ENGINEER
Apr 15 2017

Winnipeg
THE CITY OF WINNIPEG
WATER AND WASTE DEPARTMENT

SOUTH END WATER POLLUTION CONTROL CENTRE
SEWPCC UPGRADING/EXPANSION PROJECT
ELECTRICAL – CABLE TRAY
FERMENTERS/THICKENERS
SECTIONS AND DETAILS

CITY DRAWING NUMBER	SHEET	REV.	SIZE
1-0102-ECTR-D004	001	00	A1

LAST SAVE: 2017/03/24 – 2:21pm
PATH: C:\Users\persm2\DWG\1-0102-ECTR-D004-001.dwg

PLOT DATE: Mar 24, 2017 – 2:21pm
FILE NAME: 1-0102-ECTR-D004-001.dwg