A1 SIZE - 594mm x 841mm

ELEMENTARY DIAGRAM:

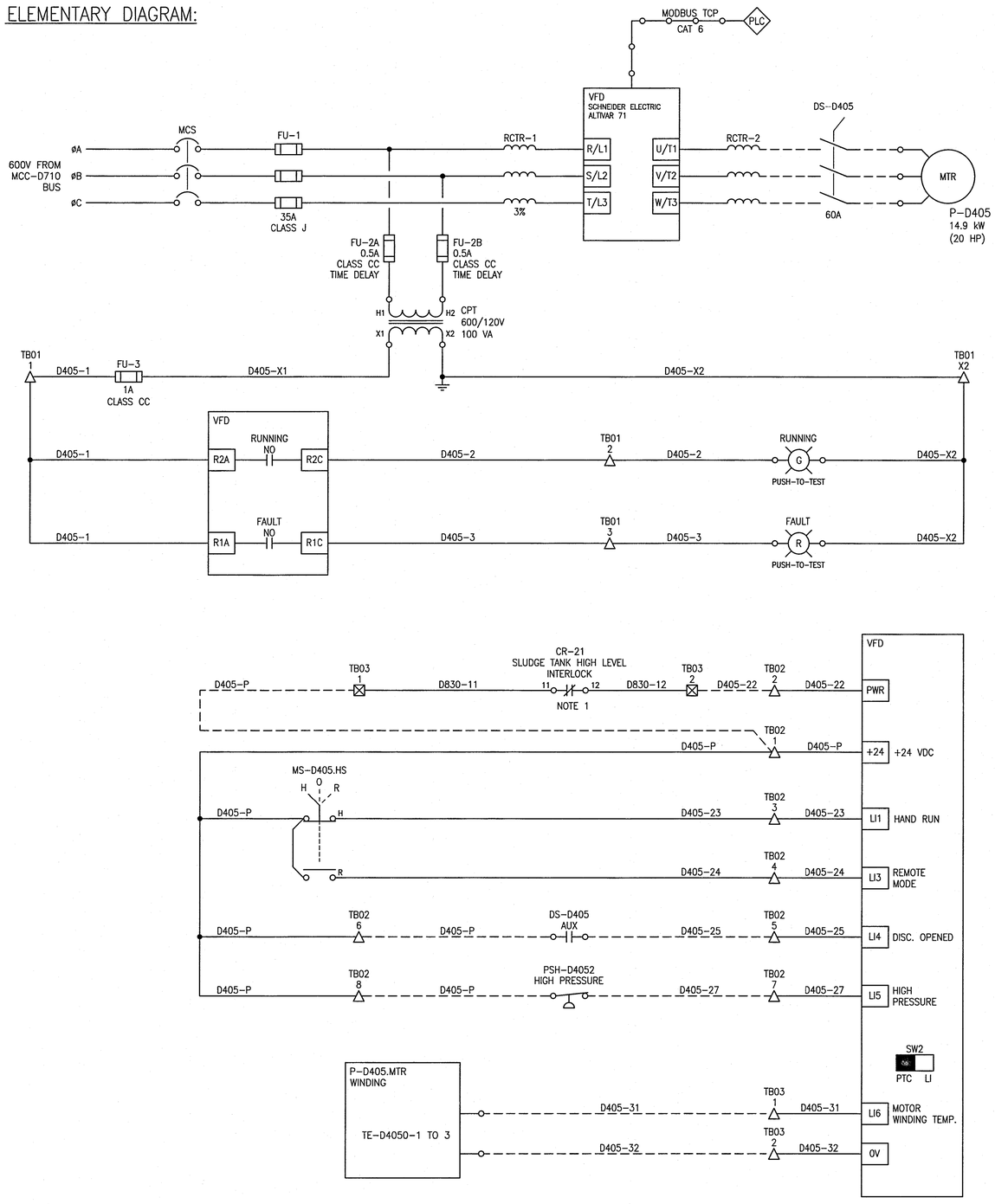

FIELD CONNECTION DIAGRAM:

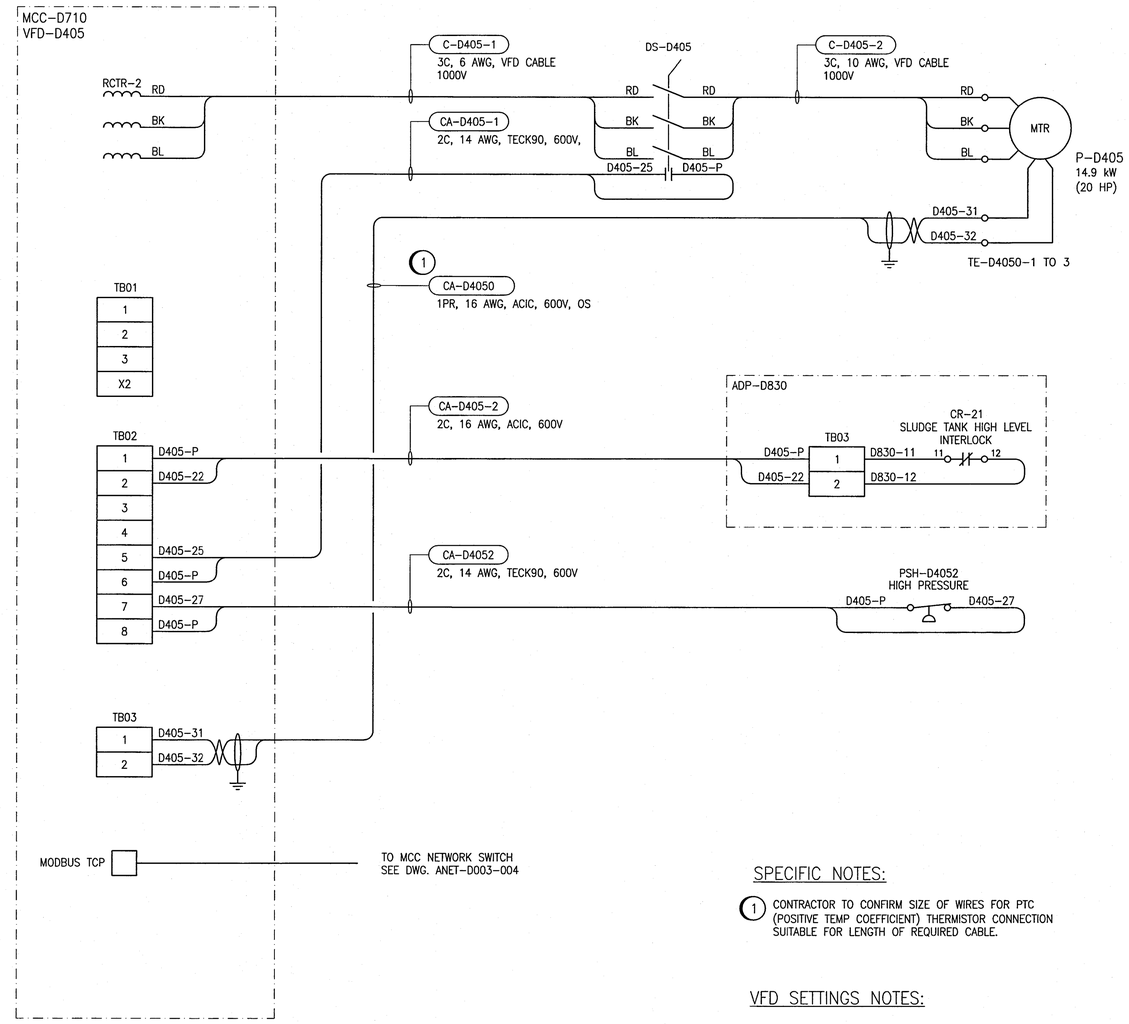

SPECIFIC NOTES:

(1) CONTRACTOR TO CONFIRM SIZE OF WIRES FOR PTC (POSITIVE TEMP COEFFICIENT) THERMISTOR CONNECTION SUITABLE FOR LENGTH OF REQUIRED CABLE.

VFD SETTINGS NOTES:

1. IN HAND MODE, THE VFD TO OPERATE AT RATED SPEED.
2. "DISCONNECT OPENED" IS TO ISSUE STOP COMMAND TO THE VFD.
3. PRESSURE SWITCH PSH-D4052 IS TO GENERATE HIGH PRESSURE FAULT SIGNAL.

LEGEND:

△ MCC TERMINAL

⊠ ADP-D830 TERMINAL

NOTES

1. INTERLOCK IS NOT WIRED FAIL-SAFE IN ORDER TO INTERFACE WITH EXISTING SLUDGE HOLDING TANK LEVEL SWITCH WIRING.

REFERENCE DRAWINGS	DESCRIPTION
1-0102-ACBD-D071	CABINET LAYOUT ADP-D830 SLUDGE HOLDING TANK HIGH LEVEL PUMPS INTERLOCK

APEGM Certificate of Authorization
SNC-Lavalin Inc.
No. 4489

NO.	REVISIONS	DATE	DESIGN	CHECK
00	ISSUED FOR CONSTRUCTION - 976-2016	2017/04/05	SSB	TMC

CH2MHILL. SNC·LAVALIN KGS GROUP

DESIGNED BY: S. BOGHOSIAN	CHECKED BY: T. CHURCH
DRAWN BY: S. BOGHOSIAN	APPROVED BY: E. RYCZKOWSKI
SCALE: NTS	ISSUED FOR CONSTRUCTION BY: J. SHUMKA
DATE: 2016/07/06	DATE: 2017/04/05
CONSULTANT NO.: 474248	

ENGINEER'S SEAL: PROVINCE OF MANITOBA, M. CHURCH, Member 32682, REGISTERED PROFESSIONAL ENGINEER, Apr. 4, 2017

THE CITY OF WINNIPEG
WATER AND WASTE DEPARTMENT

SOUTH END WATER POLLUTION CONTROL CENTRE
SEWPCC UPGRADING/EXPANSION PROJECT
ELECTRICAL - MOTOR STARTER SCHEMATIC
FERMENTERS/THICKENERS
P-D405 TWAS PUMP

CITY DRAWING NUMBER	SHEET	REV.	SIZE
1-0102-EMCL-D405	001	00	A1

PLOT DATE: Mar 28, 2017 - 11:27am

FILE NAME:1-0102-EMCL-D405.dwg

LAST SAVE: 2017/03/28 - 11:27am
PATH: C:\pw_workdir\ch2mhill_wbg\sh043264\d0416211 9\1-0102-EMCL-D405.dwg