A1 SIZE – 594mm x 841mm

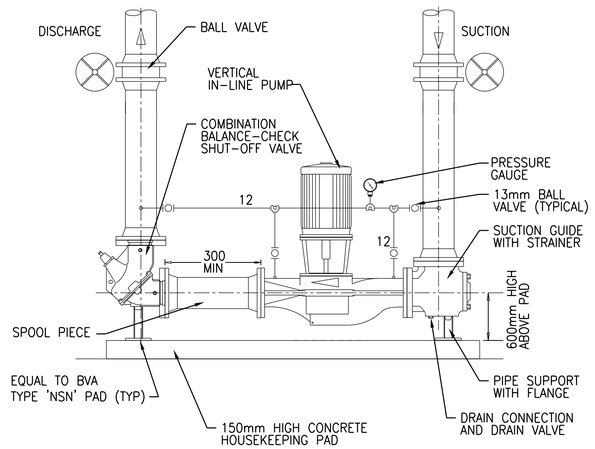

NOTES:
1 DO NOT CONNECT PRESSURE GAUGE LINES TO SEAL FLUSH LINES.
2 PRESSURE GAUGE LINES TO BE SCHED 40 BLACK STEEL.

TYPICAL VERTICAL IN-LINE PUMP DETAIL
NTS

2210-901

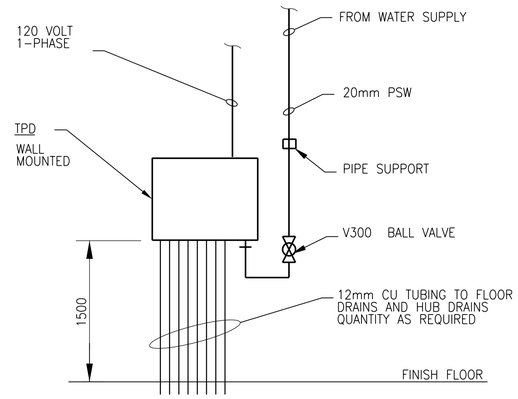

ELEVATION

ELECTRONIC TRAP PRIMER
NTS

2213-411

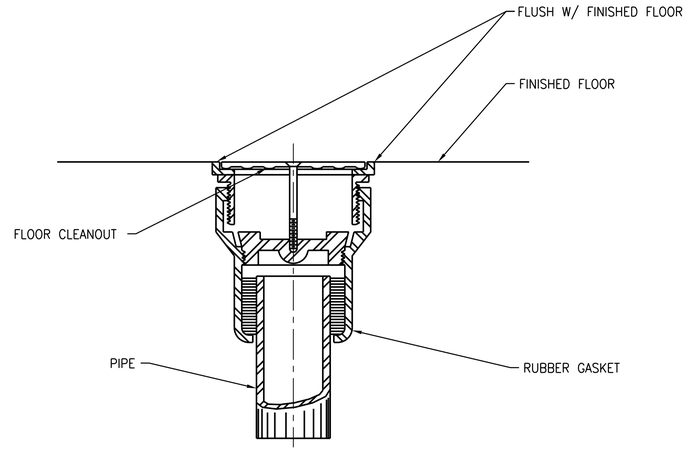

FLOOR CLEANOUT

2213-501

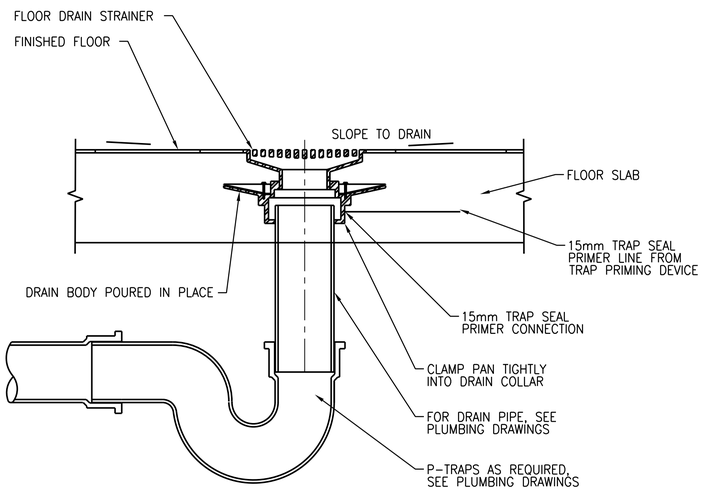

FLOOR DRAIN
NTS

2213-502

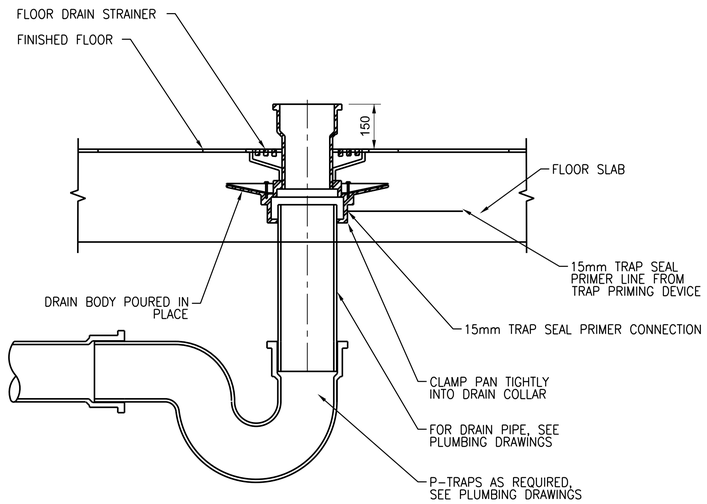

FUNNEL FLOOR DRAIN
NTS

2213-503

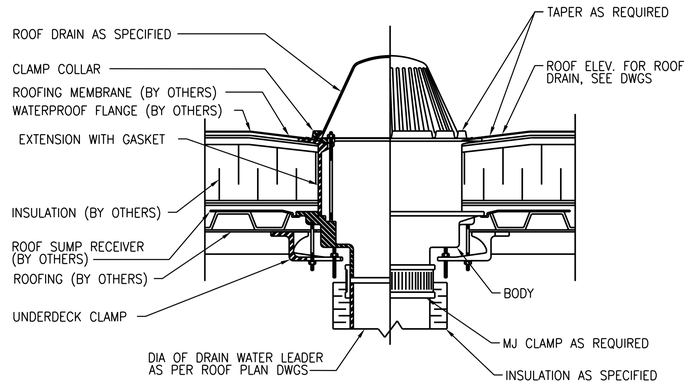

NOTE:
1. LOCATION AND SIZE OF ROOF DRAIN, SEE ROOFING PLAN DWGS.

ROOF DRAIN (RD-1)
NTS

2213-504

APEGM
Certificate of Authorization
CH2M HILL Canada Ltd.
No. 1441

NO.	REVISIONS	DATE	DESIGN	CHECK
02	ISSUED FOR CONSTRUCTION – 976-2016	2017/04/05	K.F.	J.C.
01	ISSUED FOR CONSTRUCTION	10/2015	K.F.	J.C.
00	ISSUED FOR TENDER	08/2015	K.F.	J.C.

CH2MHILL
SNC·LAVALIN
KGS GROUP

DESIGNED BY: T. TRAN	CHECKED BY: D. CUDDINGTON
DRAWN BY: K. FONG	APPROVED BY: H.T. FREIHAMMER
SCALE: NTS	ISSUED FOR CONSTRUCTION BY: J. SHUMKA
DATE: 2017/04/05	DATE: 2017/04/05
CONSULTANT NO.: 474248	

ENGINEER'S SEAL
PROVINCE OF MANITOBA
T.T. TRAN
Member 40578
REGISTERED PROFESSIONAL ENGINEER
Apr 5/17.

Winnipeg
THE CITY OF WINNIPEG
WATER AND WASTE DEPARTMENT

SOUTH END WATER POLLUTION CONTROL CENTRE
SEWPCC UPGRADING/EXPANSION PROJECT
MECHANICAL
PLUMBING
STANDARD DETAILS (2)

CITY DRAWING NUMBER	SHEET	REV.	SIZE
1-0102-MDTL-A003		02	A1

PLOT DATE: 2017\03\29
FILE NAME: 1-0102-MDTL-A003.dgn

©CH2M HILL 2017. ALL RIGHTS RESERVED.