A1 SIZE – 594mm x 841mm

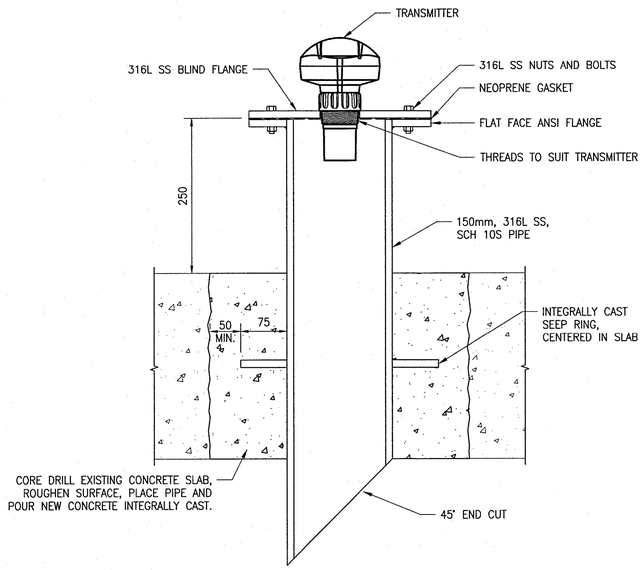

(A) ULTRASONIC LEVEL TRANSMITTER – FLANGE MOUNT

NTS

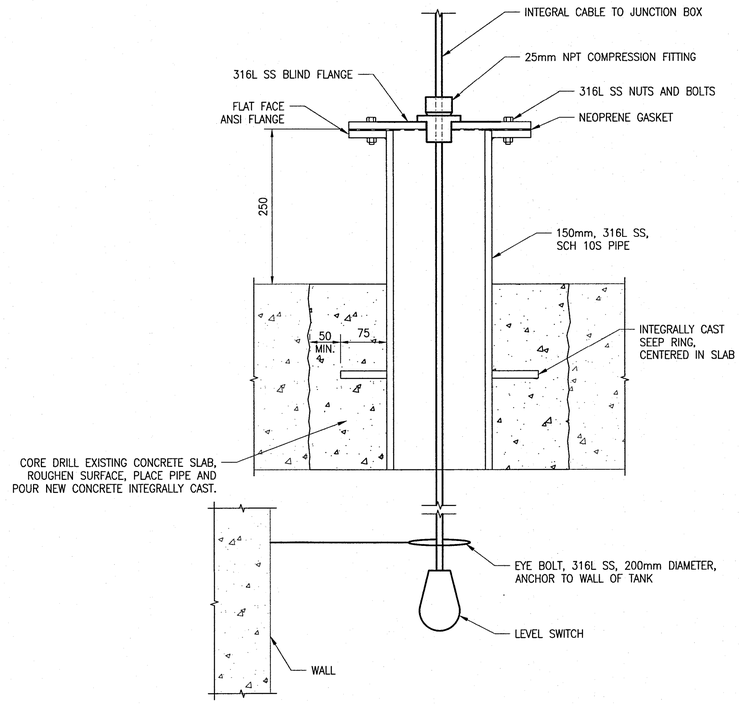

(B) LEVEL SWITCH – FLANGE MOUNT

NTS

REFERENCE DRAWINGS	DESCRIPTION

NOTES

1.

APEGM Certificate of Authorization
SNC-Lavalin Inc.
No. 4489

NO.	REVISIONS	DATE	DESIGN	CHECK
00	ISSUED FOR CONSTRUCTION – 976–2017	2017/04/05	SSB	TMC

CH2MHILL. SNC·LAVALIN KGS GROUP

DESIGNED BY: S. BOGHOSIAN	CHECKED BY: T. CHURCH
DRAWN BY: MJ. PERSSON	APPROVED BY: E. RYCZKOWSKI
SCALE: NTS	ISSUED FOR CONSTRUCTION BY: J. SHUMKA
DATE: 2016/09/01	DATE: 2017/04/05
CONSULTANT NO.: 474248	

ENGINEER'S SEAL
PROVINCE OF MANITOBA
T.M. CHURCH
Member 32682
REGISTERED PROFESSIONAL ENGINEER
Apr. 5, 2017

Winnipeg
THE CITY OF WINNIPEG
WATER AND WASTE DEPARTMENT

SOUTH END WATER POLLUTION CONTROL CENTRE
SEWPCC UPGRADING/EXPANSION PROJECT
AUTOMATION – INSTALLATION DETAILS
FERMENTERS/THICKENERS/BIOFILTERS
LEVEL INSTRUMENTS

CITY DRAWING NUMBER	SHEET	REV.	SIZE
1–0102–ADTL–D001	001	00	A1

PLOT DATE: Apr 01, 2017 – 10:38am

FILE NAME:1–0102–ADTL–D001.dwg

LAST SAVE: 2017/04/01 – 10:38am
PATH: C:\pw_workdir\ch2mhill_wbg\sh043264\d0356273\1–0102–ADTL–D001.dwg