A1 SIZE – 594mm x 841mm

ELECTRONIC CIRCUIT PROTECTION SCHEDULE			
TB	IDENTIFIER	SIZE	RATING
TB20	CB–0931	12.5x80mm	2A CLASS 2
	CB–0932	12.5x80mm	1A CLASS 2
TB21	CB–2931	12.5x80mm	2A CLASS 2
	CB–2932	12.5x80mm	1A CLASS 2
TB22	CB–4731	12.5x80mm	2A CLASS 2
	CB–4732	12.5x80mm	2A CLASS 2
NOTES			

ADP–D833 POWER CONSUMPTION SCHEDULE AT 24 VDC				
LOAD	RM01 CURRENT (mA)	RM02 CURRENT (mA)	RM03 CURRENT (mA)	NOTES
ND–D840–4 RACK	700	–	700	2
ND–D840–4 SEGMENT D853	53	–		1
ND–D841–4 RACK	–	600	600	2
ND–D841–4 SEGMENT D863	–	40		1
TOTAL	753	640	1300	

NOTES
1. BASED ON DATA SHEET.
2. ESTIMATED.

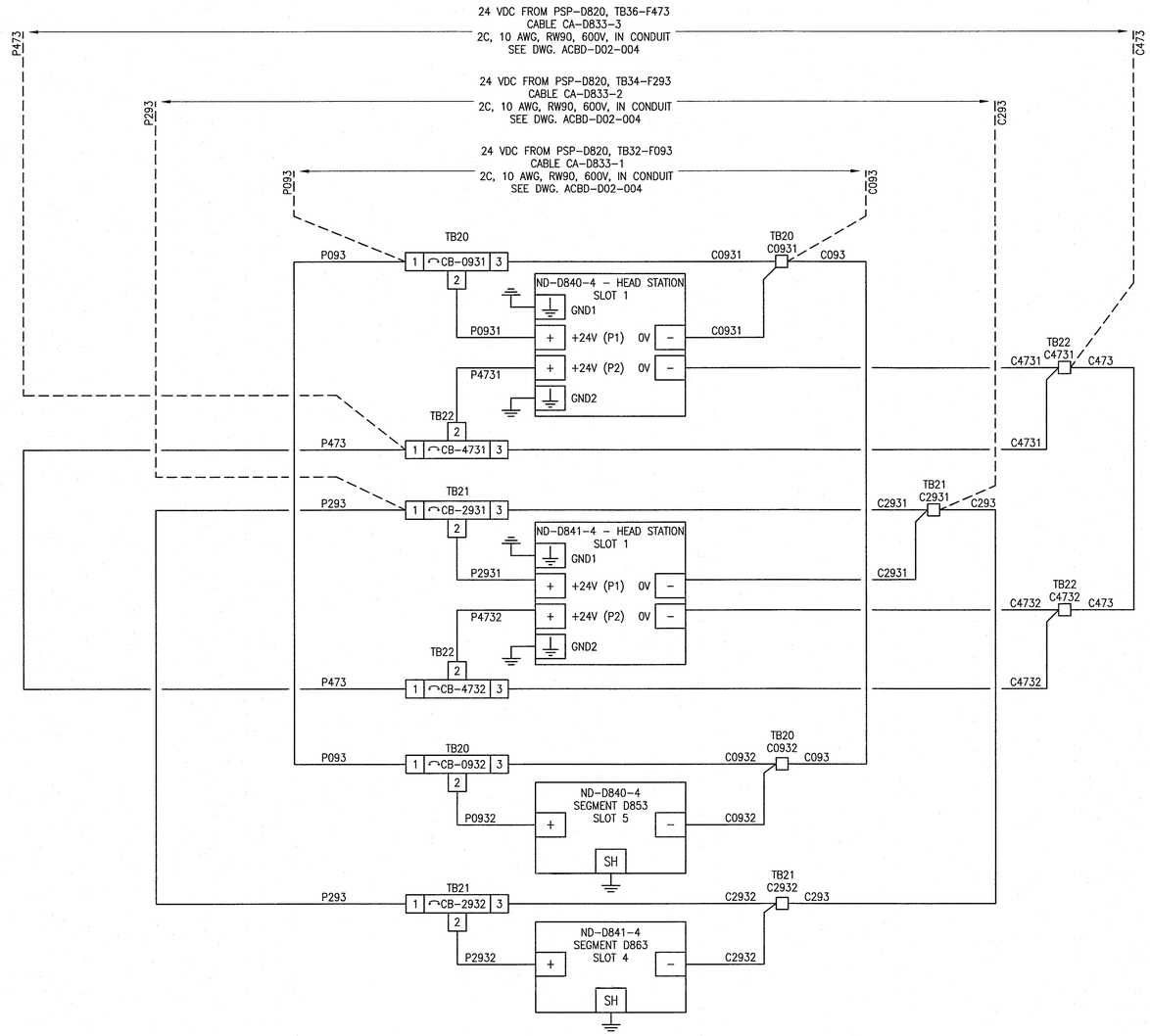

TERMINAL LAYOUT TB20
- CB–0931
- CB–0932
- C0931
- C0932

TERMINAL LAYOUT TB21
- CB–2931
- CB–2932
- C2931
- C2932

TERMINAL LAYOUT TB22
- CB–4731
- CB–4732
- C4731
- C4732

LEGEND:

⏚ EQUIPMENT GROUND

REFERENCE DRAWINGS	DESCRIPTION
–	–

APEGM Certificate of Authorization
SNC-Lavalin Inc.
No. 4489

NO.	REVISIONS	DATE	DESIGN	CHECK
00	ISSUED FOR CONSTRUCTION – 976–2017	2017/04/05	MW	PC

CH2MHILL. SNC·LAVALIN KGS GROUP

DESIGNED BY: M. WANG	CHECKED BY: P. CHICATUN
DRAWN BY: B. DE GUZMAN	APPROVED BY: E. RYCZKOWSKI
SCALE: NTS	ISSUED FOR CONSTRUCTION BY: J. SHUMKA
DATE: 2016/08/22	DATE: 2017/04/05
CONSULTANT NO.: 474248	

ENGINEER'S SEAL
PROVINCE OF MANITOBA
CHICATUN Member 30307
REGISTERED PROFESSIONAL ENGINEER
APRIL 2017 REV.00

THE CITY OF WINNIPEG
WATER AND WASTE DEPARTMENT

SOUTH END WATER POLLUTION CONTROL CENTRE
SEWPCC UPGRADING/EXPANSION PROJECT
AUTOMATION – POWER DISTRIBUTION SCHEMATIC
FERMENTERS/THICKENERS/BIOFILTERS
ADP–D833 PROFIBUS EQUIPMENT CABINET

CITY DRAWING NUMBER	SHEET	REV.	SIZE
1–0102–ACBD–D066	001	00	A1

PLOT DATE: Apr 01, 2017 – 10:14am
FILE NAME: 1–0102–ACBD–D066.dwg

LAST SAVE: 2017/04/01 – 10:14am
PATH: C:\pw_workdir\ch2mhill_wbg\sh04326A\d0356273\1–0102–ACBD–D066.dwg