A1 SIZE – 594mm x 841mm

FUSE SCHEDULE

TB	IDENTIFIER	SIZE	RATING
TB19	F44100	5x20mm	5A TD
	F45100	5x20mm	5A TD
	F45301	5x20mm	1A FA
	F45302	5x20mm	1A FA
	F45303	5x20mm	1A FA
TB20	F44201A	5x20mm	0.5A FA
	F44201B	5x20mm	0.5A FA
	F44202A	5x20mm	0.5A FA
	F44202B	5x20mm	0.5A FA
	F44203A	5x20mm	0.5A FA
	F44203B	5x20mm	0.5A FA
	F44204	5x20mm	5A FA
	F44205	5x20mm	5A FA
	F44206	5x20mm	5A FA
	F44207	5x20mm	5A FA
	F44208	5x20mm	5A FA
	F44209	5x20mm	5A FA
	F44210	5x20mm	5A FA
	F44211	5x20mm	5A FA
	F44212	5x20mm	0.5A FA
	F44213	5x20mm	0.5A FA

NOTES
FA = FAST ACTING
TD = TIME DELAY

CP-D827 POWER CONSUMPTION SCHEDULE AT 24 VDC

LOAD	QTY.	CURRENT (mA)	SUBTOTAL (mA)	NOTES
RIO-D806-1.R0	1	1650	1650	1
RIO-D806-1.R1	1	1650	1650	1
DISCRETE INPUTS	64	2.5	160	2
DISCRETE OUTPUTS	16	50	800	3
ANALOG INPUTS	32	20	640	2
LED24V15	2	500	1000	2
TOTAL			5900	

NOTES
1. BASED ON MAXIMUM SUPPLY CURRENT ON POWER SUPPLY DATA SHEET.
2. BASED ON DATA SHEET.
3. ESTIMATED.

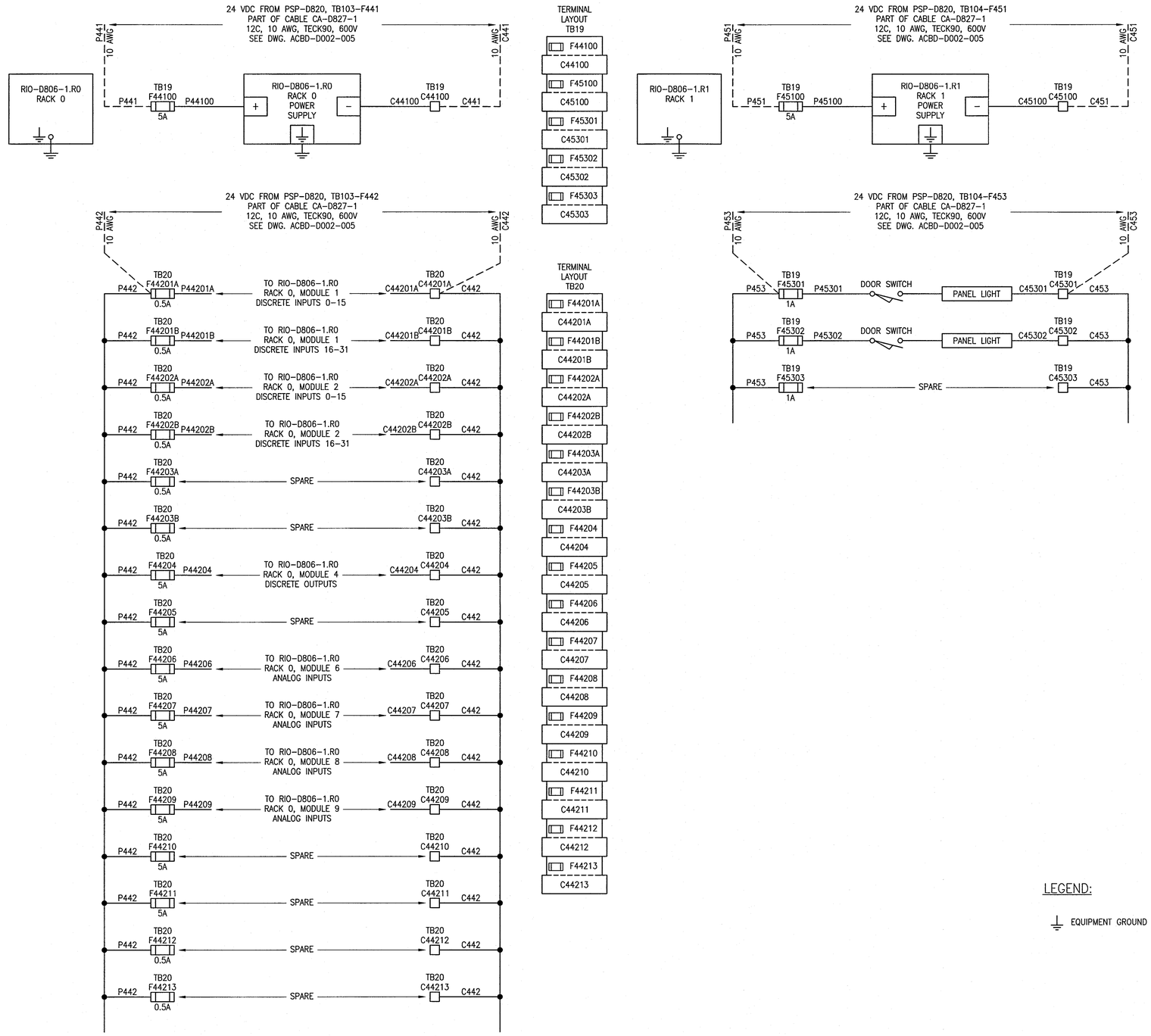

LEGEND:

⏚ EQUIPMENT GROUND

REFERENCE DRAWINGS	DESCRIPTION
–	–

APEGM Certificate of Authorization
SNC-Lavalin Inc.
No. 4489

NO.	REVISIONS	DATE	DESIGN	CHECK
00	ISSUED FOR CONSTRUCTION – 976-2016	2017/04/05	MW	PC

CH2MHILL. SNC·LAVALIN KGS GROUP

DESIGNED BY: M. WANG	CHECKED BY: P. CHICATUN
DRAWN BY: B. DE GUZMAN	APPROVED BY: E. RYCZKOWSKI
SCALE: NTS	ISSUED FOR CONSTRUCTION BY: J. SHUMKA
DATE: 2016/08/17	DATE: 2017/04/05
CONSULTANT NO.: 474248	

ENGINEER'S SEAL
PROVINCE OF MANITOBA
CHICATUN Member 30307
REGISTERED PROFESSIONAL ENGINEER
APR 04 2017

Winnipeg THE CITY OF WINNIPEG
WATER AND WASTE DEPARTMENT

SOUTH END WATER POLLUTION CONTROL CENTRE
SEWPCC UPGRADING/EXPANSION PROJECT
AUTOMATION – POWER DISTRIBUTION SCHEMATIC
FERMENTERS/THICKENERS/BIOFILTERS
CP-D827, HVAC RIO CABINET – RIO-D806-1

CITY DRAWING NUMBER	SHEET	REV.	SIZE
1-0102-ACBD-D038	001	00	A1

PLOT DATE: Apr 01, 2017 – 10:13am
FILE NAME: 1-0102-ACBD-D038.dwg

LAST SAVE: 2017/04/01 – 10:13am
PATH: C:\pw_workdir\ch2mhill_wbg\sh043264\d0356273\1-0102-ACBD-D038.dwg