A1 SIZE – 594mm x 841mm

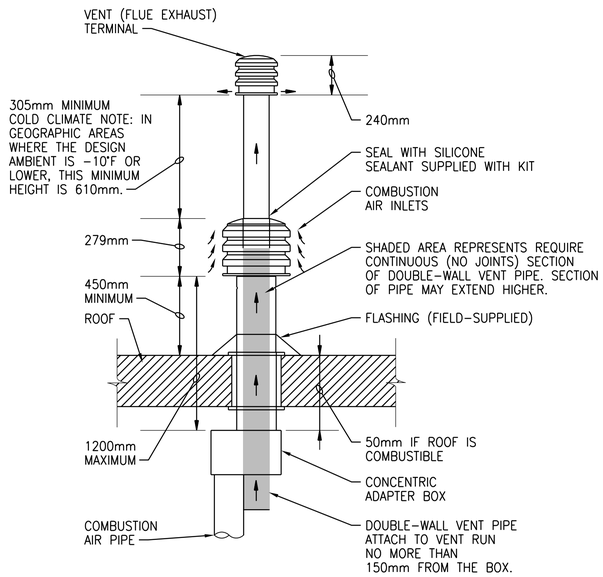

VERTICAL VENT TERMINAL/COMBUSTION AIR INLET

NTS

2355-425

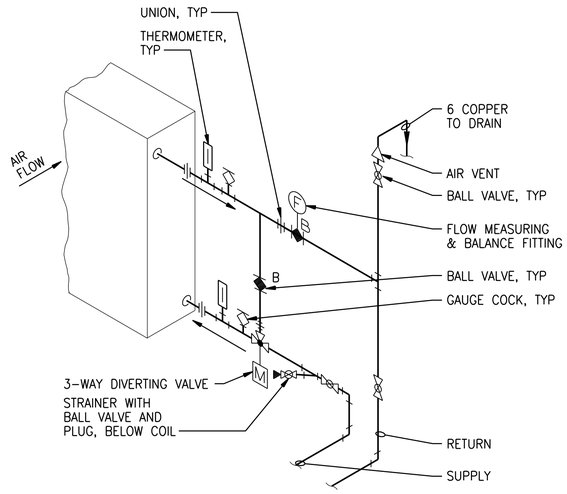

NOTES:

1. DETAIL GIVES REQUIRED SEQUENCE OF EQUIPMENT AND VALVES. PIPING ARRANGEMENT MAY VARY TO SUIT FIELD REQUIREMENTS. PIPE COIL FOR COUNTER FLOW WITH AIR.

PREHEAT COIL CONNECTION

NTS

2380-433

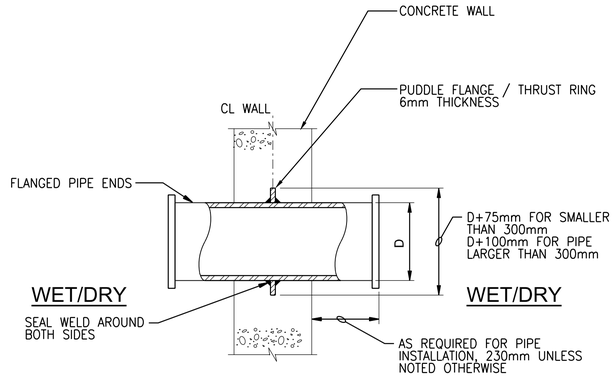

NOTES:

1. ALL DIMENSIONS IN MILLIMETERS, UNLESS OTHERWISE NOTED.
2. PIPE MATERIAL 316L STAINLESS STEEL.
3. PROVIDE WATER TIGHT JOINT AS PERFORMANCE REQUIREMENT.

WALL OR SLAB PIPE PENETRATION

NTS

4027-605

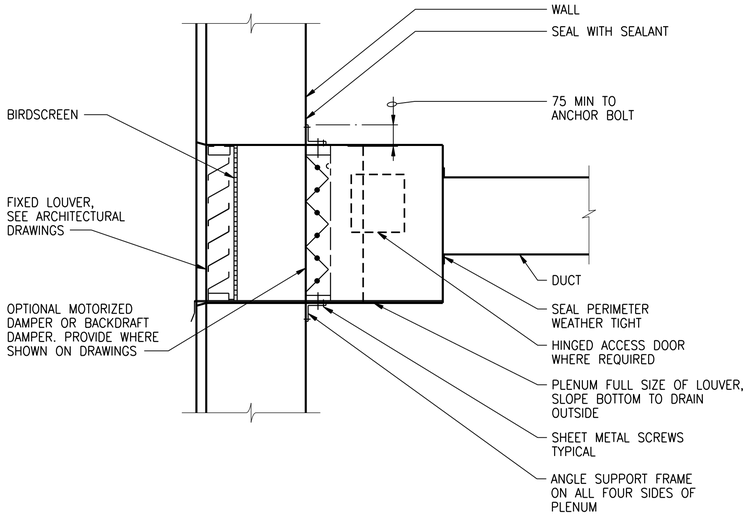

LOUVER/PLENUM CONNECTION

NTS

2331-110

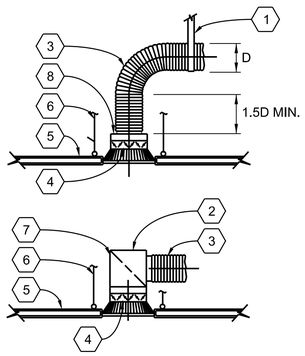

ALTERNATIVE - WHEN SPACE IS LIMITED

1. STRAP HANGER
2. INSULATE SAME AS DUCT WORK
3. FLEX SUPPLY DUCT
4. OPPOSED BLADE DAMPER
5. CEILING
6. HANGER
7. PLENUM WITH TURNING VANES
8. ROUND NECK ADAPTOR

CEILING DIFFUSER TAKE-OFFS

NTS

2337-100

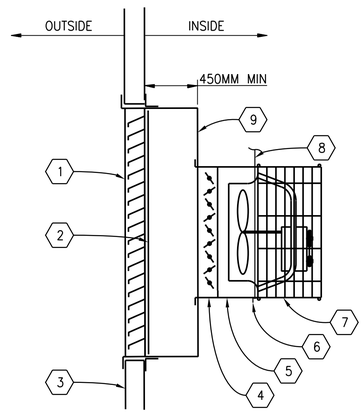

1. LOUVER
2. BIRDSCREEN
3. WALL
4. MOTORIZED DAMPER OR BACKDRAFT DAMPER, AS CALLED OUT ON THE DRAWINGS OR EQUIPMENT SCHEDULE
5. FAN UNIT
6. 38MM x 38MM x 6MM ANGLE
7. MOTOR GUARD
8. SUPPORT FROM STRUCTURE AS REQ'D
9. INSULATED SHEETMETAL PLENUM FULL SIZE OF LOUVER, OR SIZE AS SHOWN ON DRAWINGS

WALL FAN MOUNTING

NTS

2334-500

APEGM
Certificate of Authorization
CH2M HILL Canada Ltd.
No. 1441

NO.	REVISIONS	DATE	DESIGN	CHECK
03	ISSUED FOR CONSTRUCTION – 976-2016	2017/04/05	A.B.	J.C.
02	ISSUED FOR CONSTR – B.O. 899-2015	04/2016	A.B.	J.C.
01	ISSUED FOR 90% PRELIMINARY REVIEW	03/2016	A.B.	J.C.
00	ISSUED FOR TENDER – B.O. 899-2015	01/2016	K.F.	J.C.

CH2MHILL. SNC·LAVALIN KGS GROUP CONSULTING ENGINEERS

DESIGNED BY: T. TRAN
CHECKED BY: D. CUDDINGTON
DRAWN BY: K. FONG
APPROVED BY: H.T. FREIHAMMER
SCALE: NTS
ISSUED FOR CONSTRUCTION
DATE: 2017/04/05
BY: J. SHUMKA
DATE: 2017/04/05
CONSULTANT NO.: 474248

ENGINEER'S SEAL
PROVINCE OF MANITOBA
T.T. TRAN
Member 40578
REGISTERED PROFESSIONAL ENGINEER
April 5/17.

Winnipeg
THE CITY OF WINNIPEG
WATER AND WASTE DEPARTMENT

SOUTH END WATER POLLUTION CONTROL CENTRE
SEWPCC UPGRADING/EXPANSION PROJECT
MECHANICAL
HVAC
STANDARD DETAILS (5)

CITY DRAWING NUMBER: 1-0102-MDTL-A009
SHEET
REV. 03
SIZE A1

PLOT DATE: 2017\04\03
FILE NAME: 1-0102-MDTL-A009.dgn

©CH2M HILL 2017. ALL RIGHTS RESERVED.