A1 SIZE – 594mm x 841mm

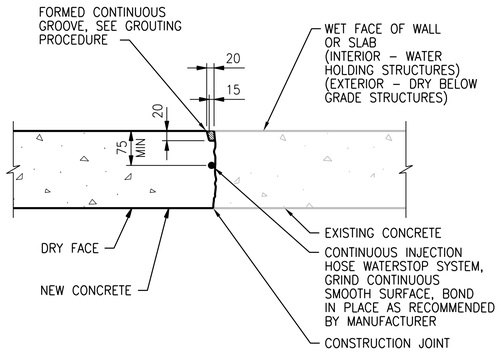

NOTE:

FOR USE IN NON-MOVING CONSTRUCTION JOINTS AND ONLY WHERE SPECIFICALLY INDICATED ON PLANS.

GROUTING PROCEDURE:

1. WAIT UNTIL NEW CONCRETE MINIMUM 28 DAYS OLD PRIOR TO GROUTING GROOVE.
2. ROUGHEN AND CLEAN SURFACES OF GROOVE WITH POWER WIRE BRUSH OR SANDBLASTING.
3. SATURATE AREA FOR 24 HOURS PRIOR TO GROUTING.
4. DRY PACK WITH TYPE II NON-SHRINK GROUT.
5. USE STEEL HAMMER AND STEEL TOOL TO DENSELY PACK GROUT INTO GROOVE.
6. WATER CURE GROUT FOR 4 DAYS MINIMUM.

INJECTION HOSE/GROOVE WATERSTOP

NTS

0315-810

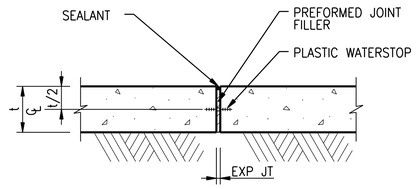

SECTION

NOTE:

1. SEE 0315-804 .

EXPANSION JOINT – BASE SLAB

NTS

0315-811

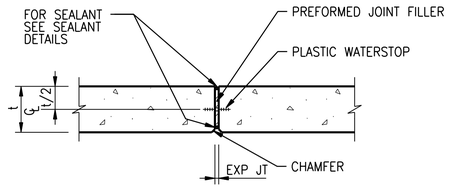

SECTION

NOTE:

1. SEE 0315-804 .

EXPANSION JOINT – SUSPENDED SLAB

NTS

0315-812

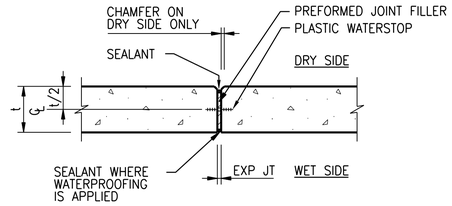

PLAN

NOTE:

1. SEE 0315-804 .

EXPANSION JOINT – WALLS

NTS

0315-813

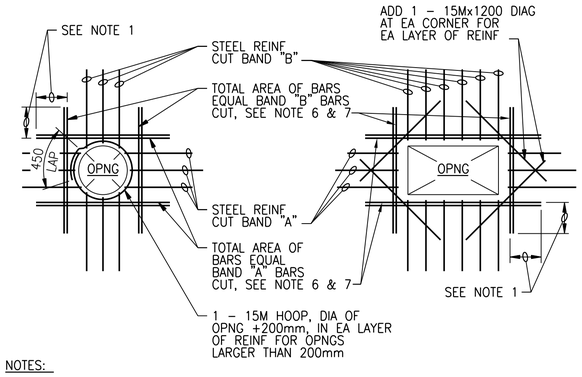

NOTES:

1. PROVIDE MINIMUM LAP, SEE GENERAL STRUCTURAL NOTES.
2. TYPICAL FOR ALL OPENINGS IN CONCRETE WALLS OF BELOW GRADE AND HYDRAULIC STRUCTURES AND ALL STRUCTURAL CONCRETE SLABS UNLESS INDICATED OTHERWISE ON PLANS.
3. DO NOT WELD REINFORCEMENT TO PIPE SLEEVES AND INSERTS.
4. PROVIDE A MINIMUM OF 2 "A" BARS AND 2 "B" BARS EACH SIDE OF OPENING (1 EACH FACE), INCLUDING DOWELS AND CORNER BARS, TYPICAL.
5. FOR OPENINGS LARGER THAN 2400mm, REINFORCE SAME AS FOR 2400mm OPENINGS.
6. SPACE AT 3 BAR DIAMETERS (OR 75mm MINIMUM) ON CENTER. LOCATE HALF OF TOTAL AREA ON EACH SIDE OF OPENING.
7. AT OPENINGS WITHIN 300mm OF AN INTERSECTING WALL OR SLAB, PROVIDE ONLY THE EXTRA REINFORCEMENT WHICH WILL FIT, AT THE BAR SPACING IN NOTE 6.

OPENING REINFORCING

NTS

0330-001

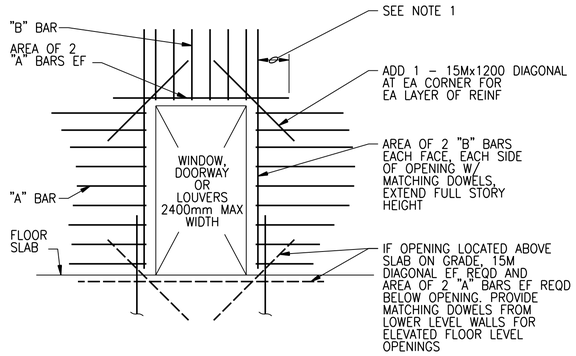

ELEVATION

NOTES:

1. PROVIDE MINIMUM LAP, SEE GENERAL STRUCTURAL NOTES.
2. TYPICAL FOR ALL OPENINGS IN ABOVE GROUND BUILDING CONCRETE WALLS UNLESS INDICATED OTHERWISE ON PLANS.
3. DO NOT WELD REINFORCEMENT TO PIPE SLEEVES AND INSERTS.

OPENING REINFORCING

NTS

0330-002

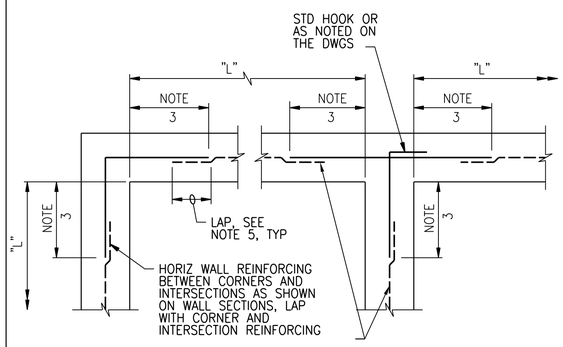

SINGLE REINFORCING MAT

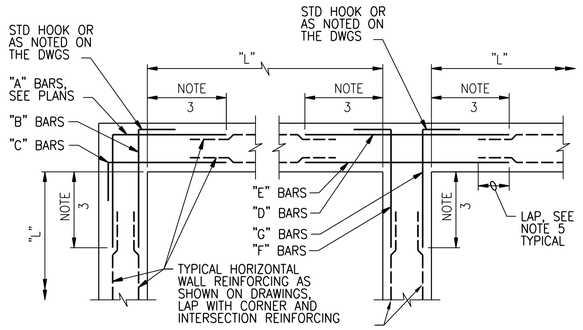

DOUBLE REINFORCING MAT

NOTES:

1. TYPICAL HORIZONTAL WALL CORNER AND INTERSECTION REINFORCING LAYOUT IS SHOWN TO AVOID CONGESTION AND PERMIT PROPER PLACEMENT, FOR SIZE AND SPACING SEE PLANS. ALL HORIZONTAL REINFORCING AT CORNERS AND INTERSECTIONS SHALL BE FABRICATED AND INSTALLED WITH SPLICES LOCATED WHERE SHOWN REGARDLESS OF BAR SIZE AND SPACING.
2. WHERE THE CORNER OR INTERSECTION REINFORCING SIZE AND SPACING IS NOT SHOWN, NOTED OR TABULATED ON THE PLANS, THE SIZE AND SPACING SHALL BE THE SAME AS THE WALL HORIZONTAL REINFORCING SHOWN ON THE WALL SECTIONS OR AS NOTED FOR THE REINFORCING BETWEEN THE CORNERS OR INTERSECTIONS.
3. EXCEPT WHERE OTHERWISE SHOWN ON THE DRAWINGS, THE LENGTH INDICATED AS "NOTE 3" SHALL BE THE LESSER OF L/4, 3000mm, OR 1.0 TIMES THE HEIGHT OF THE WALL, EXCEPT THAT IN NO CASE SHALL IT BE LESS THAN 600mm.
4. L = LENGTH OF WALL PARALLEL TO THE BAR LENGTH IN QUESTION.
5. EXCEPT WHERE OTHERWISE SHOWN ON THE DRAWINGS, THE LENGTH INDICATED AS "NOTE 5" SHALL BE EQUAL TO ONE "LAP LENGTH" AS REQUIRED BY THE GENERAL STRUCTURAL NOTES. USE THE LAP LENGTH AS REQUIRED FOR THE SMALLER OF THE TWO REINFORCING BARS BEING SPLICED.
6. UNLESS OTHERWISE NOTED, "B" AND "C" BARS ARE THE SAME SIZE AND SPACING AND "F" AND "G" BARS ARE THE SAME SIZE AND SPACING.

TYPICAL WALL CORNER AND INTERSECTION REINFORCING

NTS

0330-003

APEGM
Certificate of Authorization
CH2M HILL Canada Ltd.
No. 1441

NO.	REVISIONS	DATE	DESIGN	CHECK
02	ISSUED FOR CONSTRUCTION – 976-2016	2017/04/05	G.O.	J.C.
01	ISSUED FOR CONSTRUCTION	10/2015	G.O.	J.C.
00	ISSUED FOR TENDER	08/2015	G.O.	J.C.

CH2MHILL. KGS GROUP SNC·LAVALIN

DESIGNED BY: J. THANNICKAL
CHECKED BY: E. LUI
DRAWN BY: G.OMORI
APPROVED BY: H.T. FREIHAMMER
SCALE: NTS
ISSUED FOR CONSTRUCTION BY: J. SHUMKA
DATE: 2017/04/05
DATE: 2017/04/05
CONSULTANT NO.: 474248

ENGINEER'S SEAL
APR 5, 2017
PROVINCE OF MANITOBA
LUI
Member
37003
REGISTERED PROFESSIONAL ENGINEER

Winnipeg
THE CITY OF WINNIPEG
WATER AND WASTE DEPARTMENT

SOUTH END WATER POLLUTION CONTROL CENTRE
SEWPCC UPGRADING/EXPANSION PROJECT
STRUCTURAL
STANDARD DETAILS (3)

CITY DRAWING NUMBER	SHEET	REV.	SIZE
1-0102-SDTL-A004		02	A1

PLOT DATE: 2017\03\29
FILE NAME: 1-0102-SDTL-A004.dgn

©CH2M HILL 2017. ALL RIGHTS RESERVED.