A1 SIZE – 594mm x 841mm

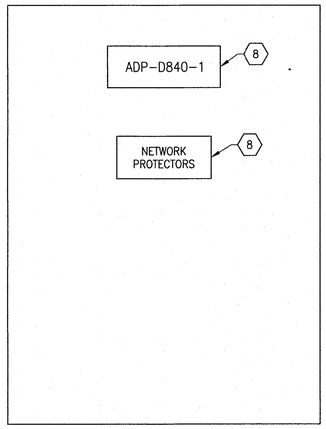

(A) EXTERIOR PANEL VIEW
1 : 3

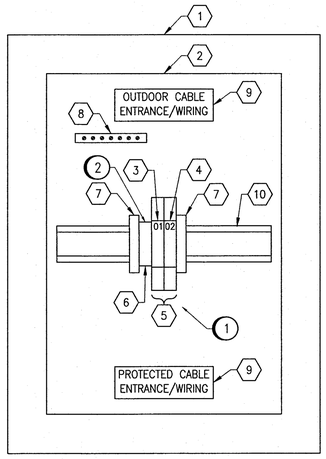

(A) INTERIOR PANEL VIEW
1 : 3

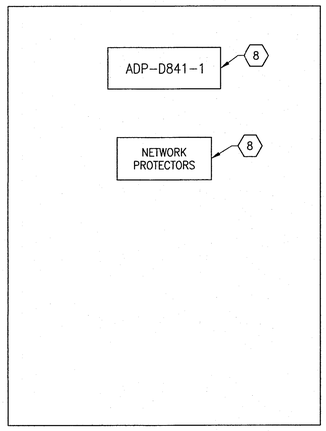

(B) EXTERIOR PANEL VIEW
1 : 3

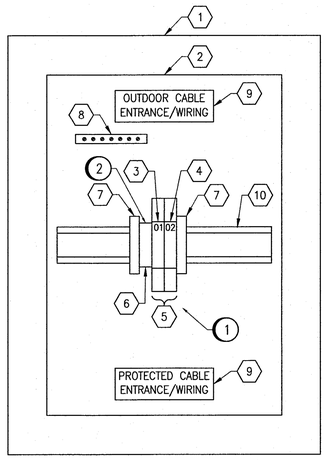

(B) INTERIOR PANEL VIEW
1 : 3

BILL OF MATERIAL

ITEM	ADP–D840–1 QTY	ADP–D841–1 QTY	DESCRIPTION	MANUFACTURER	CATALOG NUMBER
1	1	1	TYPE 12 CONTINUOUS HINGE WALL–MOUNT ENCLOSURE WITH CLAMPS – 406x305x203mm	HOFFMAN	A161208LP
2	1	1	PANEL FOR ITEM 1	HOFFMAN	A16P12
3	1	1	BXT ML2 BD HFS 5 PROTECTION MODULE – PROFIBUS DP	DEHN	920 271
4	1	1	BXT ML2 BD S 24 PROTECTION MODULE – PROFIBUS PA	DEHN	920 244
5	2	2	BXT BAS PROTECTION MODULE BASE	DEHN	920 300
6	AS REQ'D	AS REQ'D	GROUND MODULAR TERMINAL – USLKG 16N, NS 35/7.5	PHOENIX CONTACT	0443023
7	AS REQ'D	AS REQ'D	TERMINAL END CLAMP – CLIPFIX 35	PHOENIX CONTACT	3022218
8	1	1	GROUND BAR, 4 TAPS	ILSCO	0167–4
9	AS REQ'D	AS REQ'D	LAMACOIDS	–	–
10	AS REQ'D	AS REQ'D	35mm DIN RAIL	PHOENIX CONTACT	0801733

GENERAL NOTES:

1. COMPONENTS ARE TO BE LABELED AS SHOWN ON THE DRAWINGS.
2. TEST ALL WIRING AND COMPONENTS FOR FUNCTIONAL OPERATION, CORRECT CONNECTION, CONTINUITY AND INSULATION INTEGRITY. DOCUMENT ALL TEST RESULTS.
3. ALL MAJOR COMPONENTS INSIDE THE PANEL ARE TO BE LABELED WITH LAMACOIDS IN ACCORDANCE WITH MAJOR DESCRIPTIONS ON THE DRAWINGS.
4. PROVIDE WIRE BARREL FERRULES WHERE POSSIBLE.
5. ALL TERMINAL BLOCKS SHALL BE NUMBERED AS SHOWN IN THE DRAWINGS, COMPLETE WITH GROUP LABELING.
6. ALL WIRES SHALL BE MARKED AS INDICATED ON THE DRAWINGS.
7. MARK THE NETWORK PROTECTOR NUMBERS AS SHOWN ON THE DRAWING.

SPECIFIC NOTES:

(1) THE PROTECTORS SHALL BE INSTALLED SO THAT THE PROTECTED TERMINALS ARE AT THE PROTECTED CABLE ENTRANCE SIDE.

(2) CONNECT GROUND TERMINAL TO GROUND BAR.

REFERENCE DRAWINGS	DESCRIPTION
1–0102–EGAD–D002	POWER LAYOUT, ELECTRICAL ROOM B, MECH. & JUNCTION CHAMBER RM.

APEGM Certificate of Authorization
SNC-Lavalin Inc.
No. 4489

NO.	REVISIONS	DATE	DESIGN	CHECK
00	ISSUED FOR CONSTRUCTION – 976–2017	2017/04/05	MW	PC

CH2MHILL. SNC·LAVALIN KGS GROUP

DESIGNED BY: M. WANG	CHECKED BY: P. CHICATUN
DRAWN BY: B. DE GUZMAN	APPROVED BY: E. RYCZKOWSKI
SCALE: NTS	ISSUED FOR CONSTRUCTION BY: J. SHUMKA
DATE: 2016/08/19	DATE: 2017/04/05
CONSULTANT NO.: 474248	

ENGINEER'S SEAL
PROVINCE OF MANITOBA
CHICATUN Member 30307
REGISTERED PROFESSIONAL ENGINEER
APR. 4, 2017
REV. 00

Winnipeg
THE CITY OF WINNIPEG
WATER AND WASTE DEPARTMENT

SOUTH END WATER POLLUTION CONTROL CENTRE
SEWPCC UPGRADING/EXPANSION PROJECT
AUTOMATION – CABINET LAYOUT
FERMENTERS/THICKENERS/BIOFILTERS
ADP–D840–1 & ADP–D841–1 NETWORK PROTECTOR PANELS

CITY DRAWING NUMBER	SHEET	REV.	SIZE
1–0102–ACBD–D067	001	00	A1

LAST SAVE: 2017/04/01 – 10:14am
PATH: C:\pw_workdir\ch2mhill_wbg\sh043284\d0356273\1–0102–ACBD–D067.dwg

PLOT DATE: Apr 01, 2017 – 10:14am
FILE NAME:1–0102–ACBD–D067.dwg