A1 SIZE – 594mm x 841mm

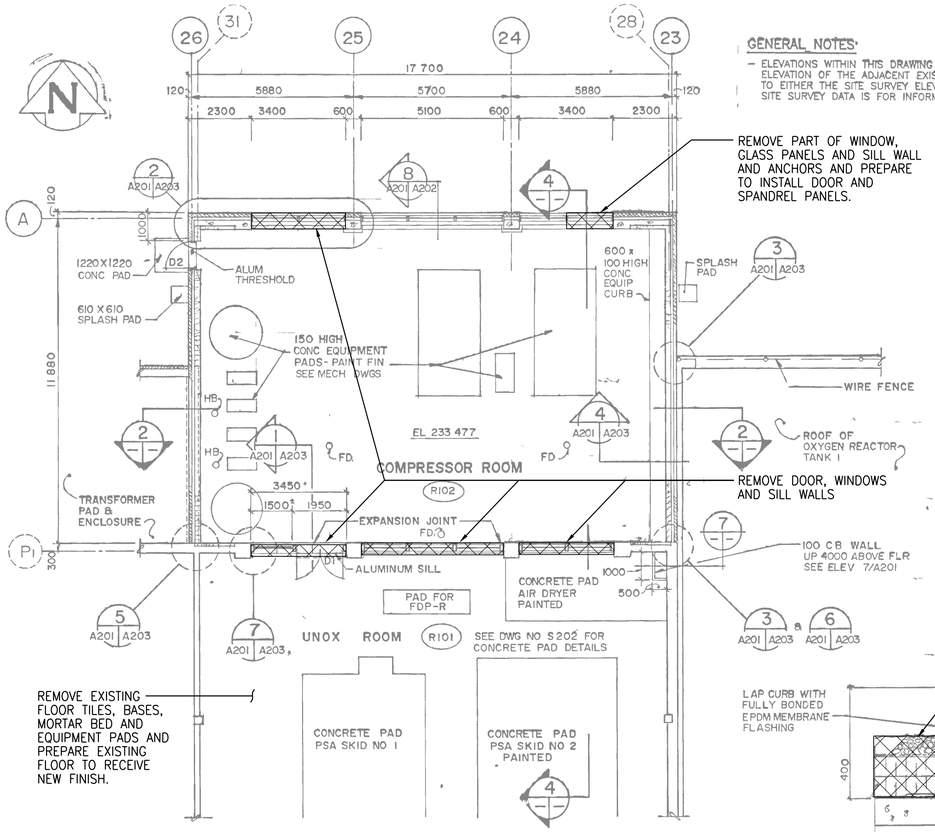

1 FLOOR PLAN (PSA EXPANSION)
EL 233 477 (766 0)

GENERAL NOTES:

– ELEVATIONS WITHIN THIS DRAWING SET ARE FIXED RELATIVE TO THE THEORETICAL ELEVATION OF THE ADJACENT EXISTING PLANT FACILITIES AND DO NOT RELATE DIRECTLY TO EITHER THE SITE SURVEY ELEVATIONS OR TO THE GEODETIC MONUMENT SITE SURVEY DATA IS FOR INFORMATION ONLY

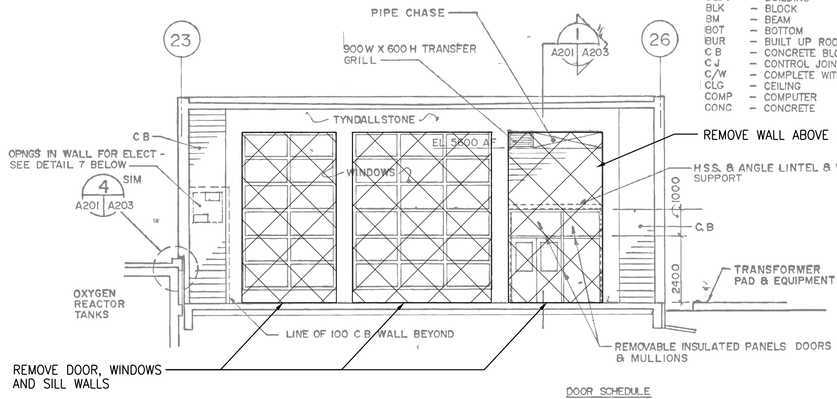

2 SECTION
NTS

ABBREVIATIONS

ADMIN	– ADMINISTRATION	DN	– DOWN
A F	– ABOVE FLOOR	DTL S	– DETAILS
ALUM	– ALUMINUM	DWG S	– DRAWINGS
ANOD	– AUODIZED	EA	– EACH
BD	– BOARD	EL	– ELEVATION
BLDG	– BUILDING	ELEV	– ELEVATION
BLK	– BLOCK	EQUIP	– EQUIPMENT
BM	– BEAM		
BOT	– BOTTOM	EXT	– EXTERIOR
BUR	– BUILT UP ROOFING	F D	– FLOOR DRAIN
C B	– CONCRETE BLOCK	F R	– FIRE RATED
C J	– CONTROL JOINT	FLR	– FLOOR
C/W	– COMPLETE WITH	GYP	– GYPSUM
CLG	– CEILING	H M	– HOLLOW METAL
COMP	– COMPUTER	INSUL	– INSULATION
CONC	– CONCRETE	INT	– INTERIOR
		MECH	– MECHANICAL
		MEMB	– MEMBRANE
		MIN	– MINIMUM
		N I C	– NOT IN CONTRACT
		N T S	– NOT TO SCALE
		O C	– ON CENTER
		O/O	– OUT TO OUT
		OPNG	– OPENING
		P-LAM	– PLASTIC LAMINATE
		P T	– PRESSURE TREATED
		PLYWD	– PLYWOOD
		R O	– ROUGH OPENING
		REQ D	– REQUIRED
		S A T	– SUSPENDED ACOUSTICAL TILE
		S S	– STAINLESS STEEL
		SPECS	– SPECIFICATIONS
		STL	– STEEL
		STOR	– STORAGE
		T O	– TOP OF
		THRU	– THROUGH
		TYP	– TYPICAL
		U/S	– UNDER SIDE
		V B	– VAPOUR BARRIER
		W/	– WITH
		WD	– WOOD

DOOR SCHEDULE

D1	2-900 x 2350 x 45	INSUL. H.M. DOORS, PANELS & FRAMES HARDWARE CODE - 12 PAINT FIN - 10	SEE DTLS 187/A203
D2	900 x 2150 x 45	INSUL. H.M. DOOR & FRAME, FRAME THERMALLY BROKEN HARDWARE CODE - 13 PAINT FIN - 10	

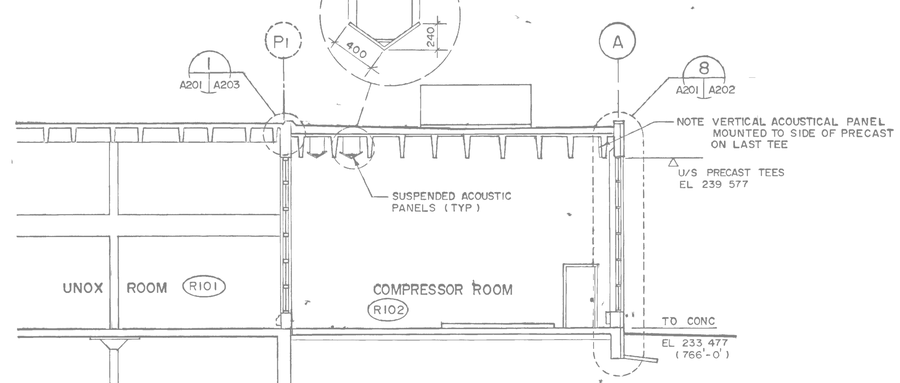

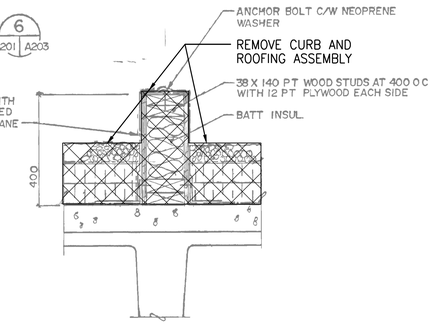

5 COOLING TOWER SUPPORT
NTS

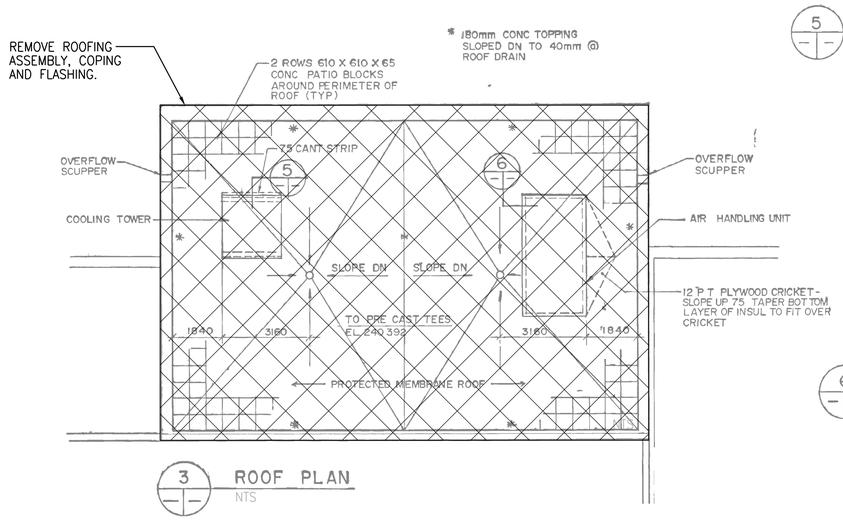

3 ROOF PLAN
NTS

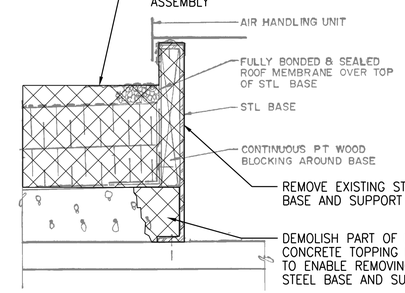

6 AIR HANDLING UNIT BASE DETAIL
NTS

4 SECTION
NTS

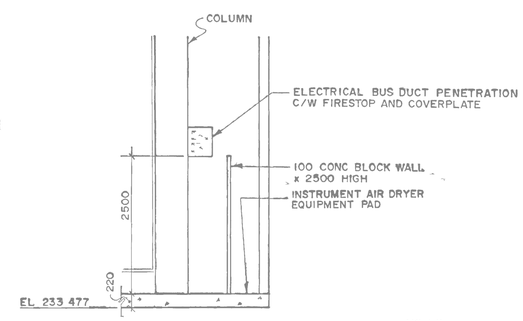

7 ELEVATION OF WALL OPNG
NTS

NOTES:

1. FOR NEW CONSTRUCTION SEE STRUCTURAL PRIMARY SLUDGE FERMENTERS/THICKENERS DRAWINGS.
2. REFER TO GENERAL DEMOLITION NOTES DRAWING 1-0102-DAAA-AD01.

SEALING ARCHITECT OR ENGINEER ACCEPTS RESPONSIBILITY ONLY FOR AREAS IDENTIFIED BY CLOUDING ON THIS DRAWING.

NOTE: THIS DRAWING SUPERSEDES DRAWING SEP-364

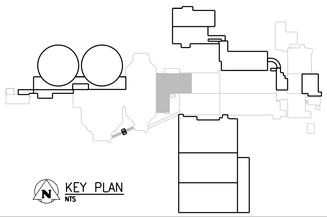

KEY PLAN
NTS

APEGM
Certificate of Authorization
CH2M HILL Canada Ltd.
No. 1441

NO.	REVISIONS	DATE	DESIGN	CHECK
00	ISSUED FOR CONSTRUCTION – 976-2016	2017/04/05	R.B.	J.C.

CH2MHILL CANADA Architects Inc.
SNC·LAVALIN KGS GROUP

DESIGNED BY: R. ZAKKO	CHECKED BY: W. YU
DRAWN BY: R. BATHAN	APPROVED BY: H.T. FRIEHAMMER
SCALE: NTS	ISSUED FOR CONSTRUCTION BY: J. SHUMKA
DATE: 2017/04/05	DATE: 2017/04/05
CONSULTANT NO.: 474248	

ENGINEER'S SEAL
PROVINCE OF MANITOBA
REID ZAKKO
EIA-05-2017
REGISTERED ARCHITECT

Winnipeg
THE CITY OF WINNIPEG
WATER AND WASTE DEPARTMENT

SOUTH END WATER POLLUTION CONTROL CENTRE
SEWPCC UPGRADING/EXPANSION PROJECT
BUILDING
PSA EXPANSION – FLOOR PLAN, ROOF PLAN
BUILDING SECTIONS & DETAILS (DEMOLITION)

CITY DRAWING NUMBER	SHEET	REV.	SIZE
1-0102-BGAD-DD50	001	00	A1

PLOT DATE: 2017\04\02
FILE NAME:

©CH2M HILL 2017. ALL RIGHTS RESERVED.