B SIZE – 279mm x 432mm

FIELD

ADP–D841
LOCATED IN ELECTRICAL ROOM B

SEGMENT D860 – DESIGN INFORMATION

MAX NO. OF SPUR LINES	NO. OF SPUR LINES	BAUD RATE	MAX LENGTH (m)	TOTAL LENGTH (m)	MAX. SPUR LENGTH (m)	LONGEST SPUR (m)	TOTAL CURRENT MAX. (mA)	TOTAL CURRENT USED (mA)
12	1	31.25 kps	1900.0	32.0	90	7.0	500	40

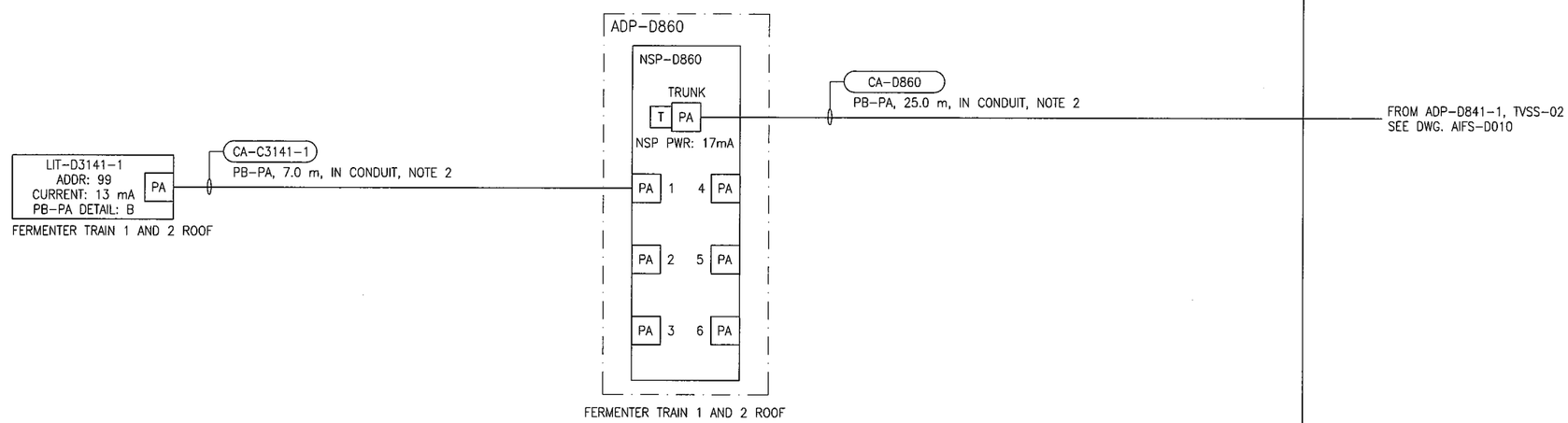

LEGEND:

PA T PROFIBUS PA TERMINAL CONNECTION WITH TERMINATION RESISTOR

NOTES:

1. REFER TO DWG. 1–0102–ADTL–A021 FOR PROFIBUS PA WIRING DETAILS.
2. ALL OUTDOOR CONDUIT MUST BE INSTALLED AS A NEMA 4 CONDUIT SYSTEM.

APEGM Certificate of Authorization
SNC-Lavalin Inc.
No. 4489

SNC·LAVALIN CH2MHILL KGS GROUP CONSULTING ENGINEERS

NO.	REVISIONS	DATE	DESIGN	CHECK
00	ISSUED FOR CONSTRUCTION – 976–2016	2017/04/05	MW	PC

DESIGNED BY: M. WANG	CHECKED BY: P. CHICATUN
DRAWN BY: M. WANG	APPROVED BY: E. RYCZKOWSKI
SCALE: NTS	DATE: 2016/07/13
ISSUED FOR CONSTRUCTION BY: J. SHUMKA	DATE: 2017/04/05
CONSULTANT NO.: 474248	

ENGINEER'S SEAL
PROVINCE OF MANITOBA
CHICATUN
Member
30307
REGISTERED PROFESSIONAL ENGINEER
APR. 4 2014
REV. 00

Winnipeg
THE CITY OF WINNIPEG
WATER AND WASTE DEPARTMENT

SOUTH END WATER POLLUTION CONTROL CENTRE
SEWPCC UPGRADING/EXPANSION PROJECT
AUTOMATION – PROFIBUS SEGMENT DIAGRAM
FERMENTERS/THICKENERS/BIOFILTERS – BRANCH 2
PROFIBUS PA SEGMENT PROTECTOR NSP–D860

CITY DRAWING NUMBER	SHEET	REV.	SIZE
1–0102–AIFS–D014	001	00	B

LAST SAVE: 2017/04/01 – 9:51am
PATH: C:\pw_workdir\ch2mhill_wbg\sh043264\d0356273\1–0102–AIFS–D014.dwg

PLOT DATE: Apr 01, 2017 – 9:51am

FILE NAME: 1–0102–AIFS–D014.dwg