A1 SIZE – 594mm x 841mm

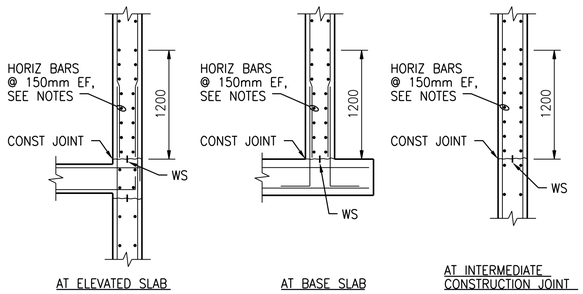

NOTES:

1. PROVIDE HORIZONTAL BARS AT 150mm SPACING EACH FACE IN THE FIRST 1200mm ABOVE ALL HORIZONTAL WALL CONSTRUCTION JOINTS IN LIQUID CONTAINING AND BELOW-GRADE STRUCTURES. WHERE TYPICAL WALL HORIZONTAL BARS ARE AT 300mm SPACING, PROVIDE ADDITIONAL BARS FOR 150mm SPACING.
2. HORIZONTAL BAR SIZE FOR THE 1200mm ZONE SHALL BE THE TYPICAL WALL HORIZONTAL BAR SIZE SHOWN ON THE DRAWINGS OR THE MINIMUM BAR SIZE IN THE TABLE BELOW, WHICHEVER IS GREATER.

WALL THICKNESS (mm)	MINIMUM BAR SIZE
250	15M
300, 350	20M
02 400, 450	20M
≥500	25M

3. PROVIDE CORNER BARS AT 150mm SPACING EACH FACE TO LAP WITH THE BARS SHOWN ABOVE, SEE (0330-003).

REINFORCING AT HORIZONTAL CONSTRUCTION JOINT

NTS (0330-004)

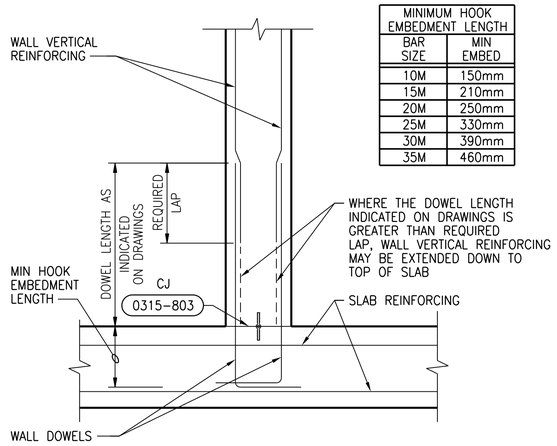

MINIMUM HOOK EMBEDMENT LENGTH	
BAR SIZE	MIN EMBED
10M	150mm
15M	210mm
20M	250mm
25M	330mm
30M	390mm
35M	460mm

WALL SECTION

NOTE:

1. UNLESS NOTED OTHERWISE, ALL DOWEL HOOKS SHALL EXTEND TO AND BE TIED OFF TO BOTTOM MAT OF SLAB REINFORCING.

VERTICAL WALL REINFORCEMENT/ DOWEL PLACEMENT

NTS (0330-005)

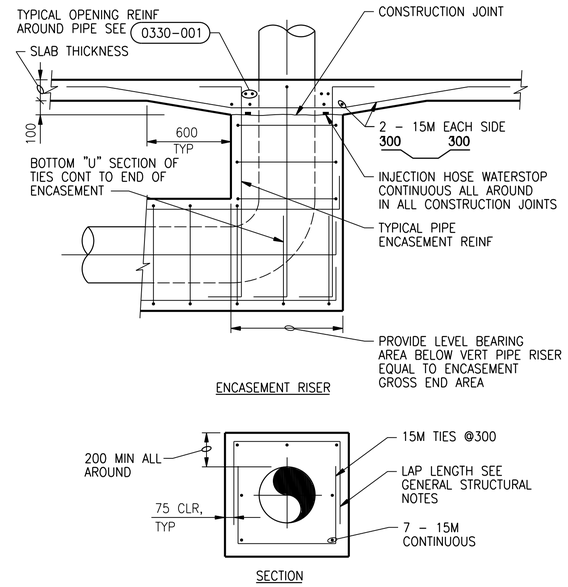

NOTES:

1. SECTION APPLIES TO PIPES W/ DIAMETERS 450mm AND SMALLER. FOR 500mm DIAMETER PIPES AND LARGER, SEE (0330-017)
2. WHERE SHOWN TIE SLAB & ENCASEMENT TOGETHER. SEE (0330-018)

PIPE ENCASEMENT

NTS (0330-016)

PIPE ENCASEMENT TABLE								
PIPE DIA (mm)	H=3000mm		H=6000mm		H=9000mm		H=12000mm	
	T (mm)	REINF	T (mm)	REINF	T (mm)	REINF	T (mm)	REINF
500 THRU 750	200	15M@300	250	15M@300	250	15M@300	250	20M@300
900 THRU 1050	250	15M@300	250	20M@300	250	25M@300	250	20M@150
1200 THRU 1400	250	20M@300	250	25M@300	250	25M@150	300	25M@150
UP TO 1500	250	20M@300	250	20M@150		25M@150	350	25M@150

HEAVY DARK LINE INDICATES BREAK BETWEEN ONE LAYER OF REINFORCING AND TWO. SEE NOTE 2.

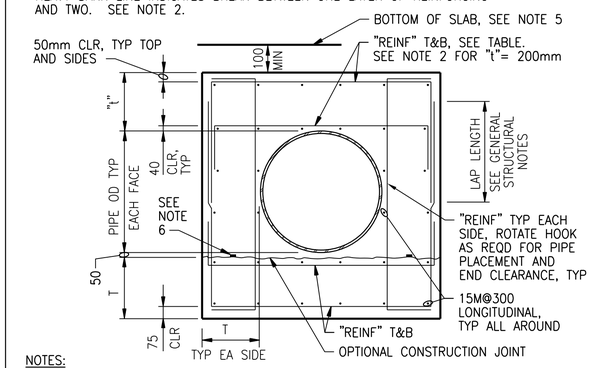

NOTES:

1. THIS DETAIL APPLIES TO PIPE DIAMETER OF 500mm AND LARGER. FOR SMALLER THAN 500mm, SEE DETAIL (0330-016).
2. FOR "t"=200mm REINFORCING SHALL BE ONE LAYER AND CENTERED IN SLABS OR WALLS. SIM (0330-016).
3. FOR ENCASEMENT AT PIPE RISER, SEE (0330-016).
4. "H" IS FILL HEIGHT OR WATER DEPTH OR COMBINATION ABOVE PIPE.
5. WHERE SHOWN TIE SLAB & ENCASEMENT TOGETHER. SEE (0330-018).
6. INJECTION HOSE WATERSTOP CONTINUOUS ALL AROUND IN ALL CONSTRUCTION JOINTS.

PIPE ENCASEMENT

NTS (0330-017)

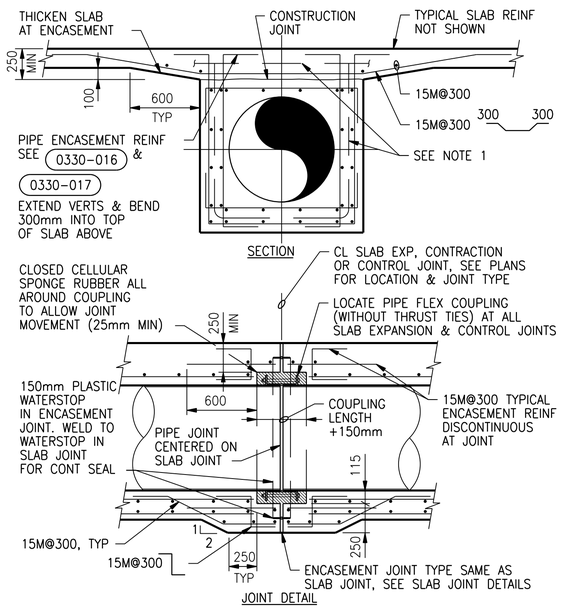

NOTE:

1. 150mm PLASTIC WS IN ENCASEMENT JOINTS. WELD TO WS IN SLAB JOINTS.

PIPE ENCASEMENT

NTS (0330-018)

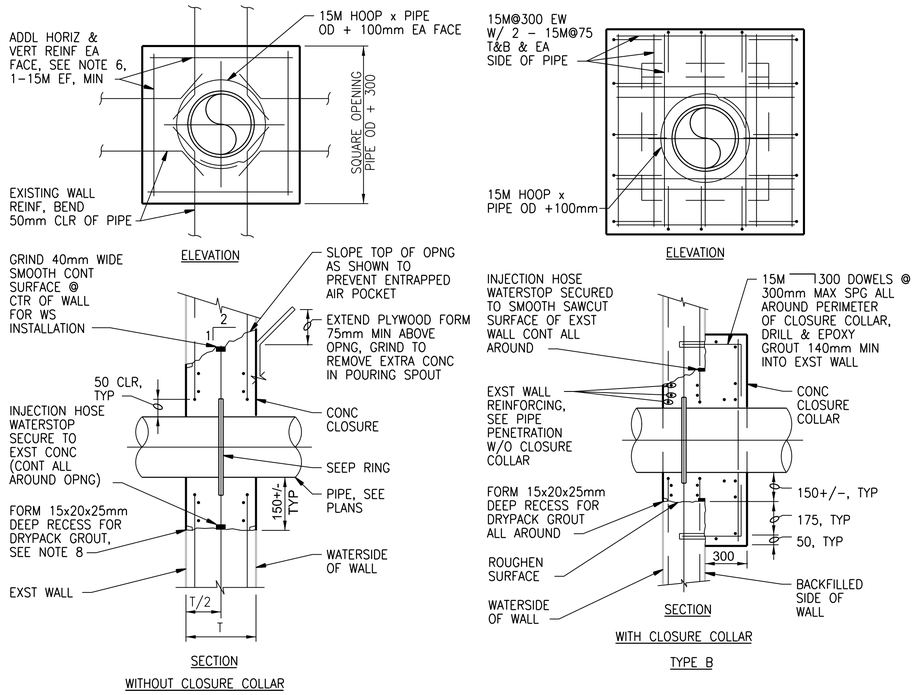

NOTES:

1. SAW-CUT 25mm DEEP x PIPE OD + 300mm SQUARE SCORE LINE ON EACH FACE OF WALL. (VERIFY DEPTH OF CUT TO CLEAR REINFORCING.) (INCREASE HEIGHT AS NOTED AT TOP ON WATERSIDE FACE FOR POURING.)
2. CHIP TO REMOVE THE CONCRETE WITHIN THE SCORE LINE, WHILE PRESERVING THE EXISTING WALL REINFORCING.
3. CUT EXISTING REINFORCING AT CENTER OF OPENING AND BEND TO CLEAR PIPE.
4. GRIND 40mm WIDE x CONT SMOOTH SURFACE ALL AROUND THE OPENING AT CENTER OF WALL. CLEAN SURFACES AND INSTALL CONTINUOUS INJECTION HOSE WATERSTOP IN PLACE.
5. INSTALL WALL PIPE. (COAT CONCRETE ENCASED PORTION OF PIPE WITH SPECIFIED COATING SYSTEM.)
6. INSTALL ADDITIONAL REINFORCING EACH FACE, EACH SIDE, ABOVE AND BELOW PIPE. HORIZONTAL REINFORCING TO HAVE COMBINED AREA EQUAL TO AREA OF HORIZONTAL REINFORCING CUT. VERTICAL REINFORCING TO HAVE COMBINED AREA EQUAL TO AREA OF VERTICAL REINFORCING CUT.
7. SOAK CONCRETE SURFACES AND WITHIN 15-MINUTES CAST CONCRETE CLOSURE. FORM GROOVE ON ALL SIDES OF OPENING EXCEPT AT TOP ON THE POUR SIDE.
8. CLEAN SURFACES OF FORMED GROOVE WITH POWER WIRE BRUSH OR SANDBLASTING AND DRY-PACK WITH NON-SHRINK GROUT AFTER NEW CONCRETE MIN 28-DAYS OLD.

PIPE PENENTRATION – EXISTING WALL

NTS (0330-022)

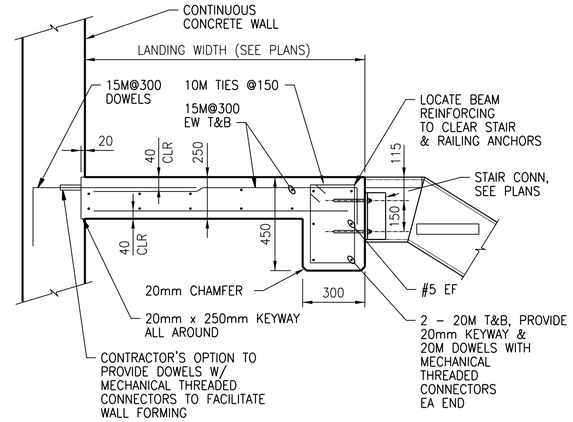

NOTE:
FOR RAILING SEE PLANS.

STAIR LANDING

NTS (0330-051)

©CH2M HILL 2017. ALL RIGHTS RESERVED.

APEGM
Certificate of Authorization
CH2M HILL Canada Ltd.
No. 1441

NO.	REVISIONS	DATE	DESIGN	CHECK
04	ISSUED FOR CONSTRUCTION – 976-2016	2017/04/05	G.O.	J.C.
03	ISSUED FOR CONSTR – B.O. 8999-2015	04/2016	C.R.	J.C.
02	ISSUED FOR ADD. 2 – B.O. 899-2015	02/2016	C.R.	J.C.
01	ISSUED FOR CONSTRUCTION	10/2015	G.O.	J.C.
00	ISSUED FOR TENDER	08/2015	G.O.	J.C.

CH2MHILL. SNC·LAVALIN KGS GROUP

DESIGNED BY: J. THANNICKAL	CHECKED BY: E. LUI
DRAWN BY: G.OMORI	APPROVED BY: H.T. FREIHAMMER
SCALE: NTS	ISSUED FOR CONSTRUCTION BY: J. SHUMKA
DATE: 2017/04/05	DATE: 2017/04/05
CONSULTANT NO.: 474248	

ENGINEER'S SEAL
APR 5, 2017
PROVINCE OF MANITOBA
E. LUI
Member
37003
REGISTERED PROFESSIONAL ENGINEER

Winnipeg
THE CITY OF WINNIPEG
WATER AND WASTE DEPARTMENT

SOUTH END WATER POLLUTION CONTROL CENTRE
SEWPCC UPGRADING/EXPANSION PROJECT
STRUCTURAL
STANDARD DETAILS (4)

CITY DRAWING NUMBER	SHEET	REV.	SIZE
1-0102-SDTL-A005		04	A1

PLOT DATE: 2017\03\29
FILE NAME: 1-0102-SDTL-A005.dgn