A1 SIZE – 594mm x 841mm

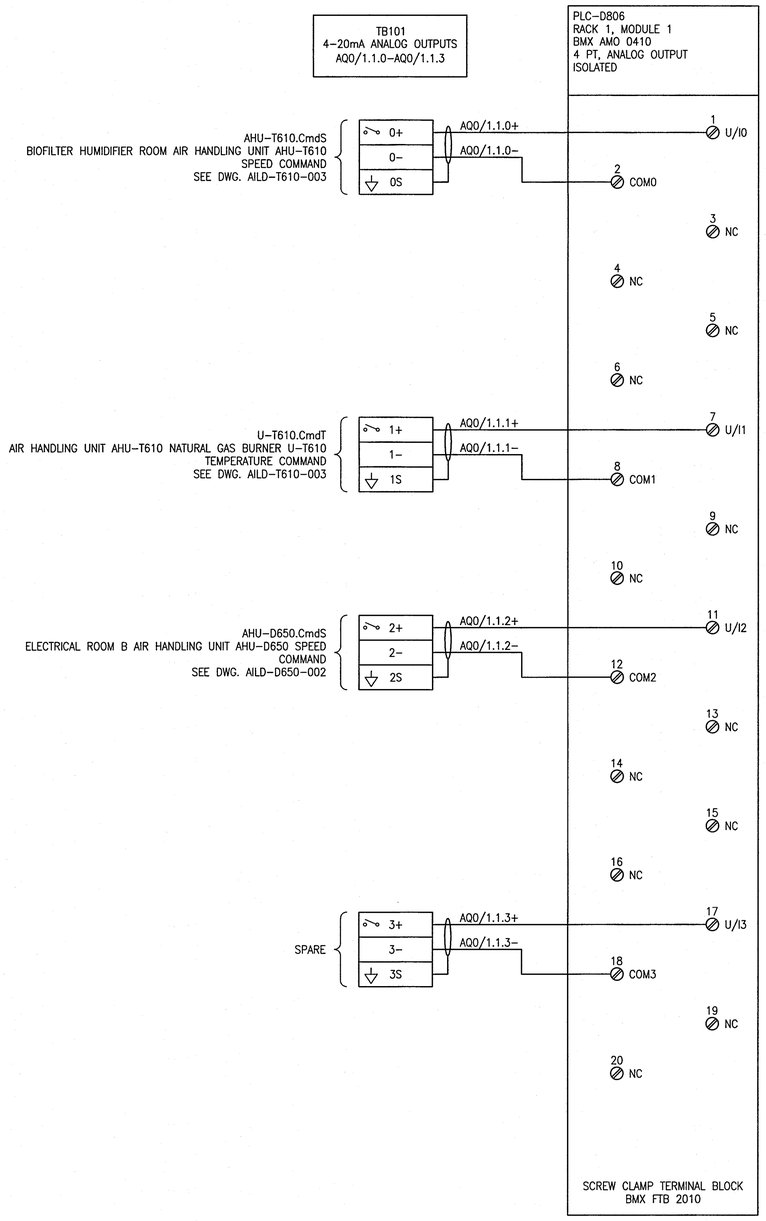

LEGEND:

ISOLATED GROUND

REFERENCE DRAWINGS	DESCRIPTION

APEGM
Certificate of Authorization
SNC-Lavalin Inc.
No. 4489

NO.	REVISIONS	DATE	DESIGN	CHECK
00	ISSUED FOR CONSTRUCTION – 976-2016		MW	PC

CH2MHILL.
SNC·LAVALIN
KGS GROUP CONSULTING ENGINEERS

DESIGNED BY: M. WANG	CHECKED BY: P. CHICATUN
DRAWN BY: M. WANG	APPROVED BY: E. RYCZKOWSKI
SCALE: NTS	ISSUED FOR CONSTRUCTION BY: J. SHUMKA
DATE: 2016/12/15	DATE: 2017/04/05
CONSULTANT NO.: 474248	

ENGINEER'S SEAL
PROVINCE OF MANITOBA
CHICATUN
Member
30307
REGISTERED PROFESSIONAL ENGINEER
APR. 4 2017
REV.00

Winnipeg
THE CITY OF WINNIPEG
WATER AND WASTE DEPARTMENT

SOUTH END WATER POLLUTION CONTROL CENTRE
SEWPCC UPGRADING/EXPANSION PROJECT
AUTOMATION – WIRING DIAGRAM
FERMENTERS/THICKENERS/BIOFILTERS
CP-D826, PLC-D806 – ANALOG OUTPUTS

CITY DRAWING NUMBER	SHEET	REV.	SIZE
1-0102-ACBD-D036	001	00	A1

LAST SAVE: 2017/04/01 – 10:13am
PATH: C:\pw_workdir\ch2mhill_wbg\sh043264\d0356273\1-0102-ACBD-D036.dwg

PLOT DATE: Apr 01, 2017 – 10:13am

FILE NAME: 1-0102-ACBD-D036.dwg