A1 SIZE – 594mm x 841mm

ELEMENTARY DIAGRAM:

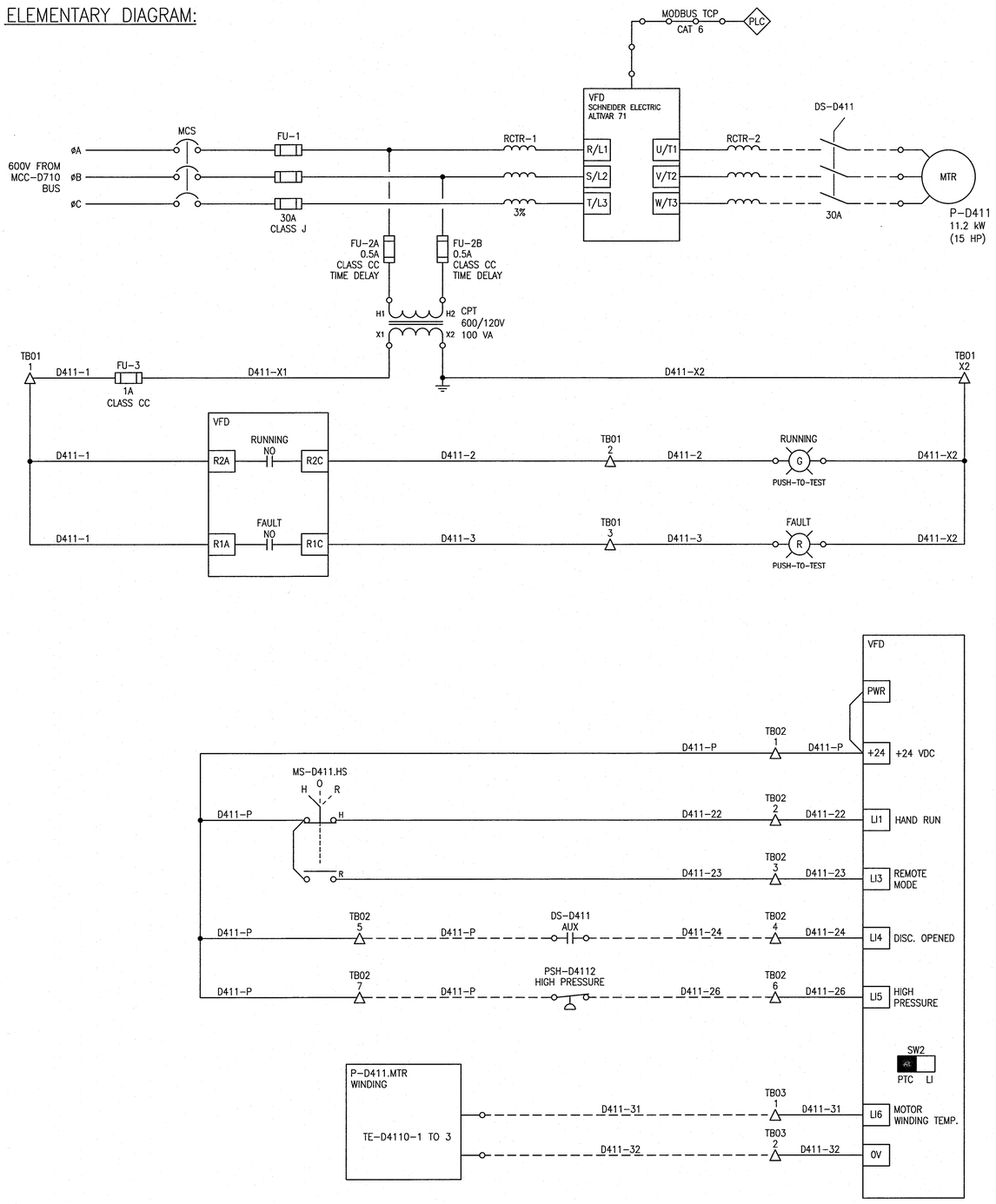

FIELD CONNECTION DIAGRAM:

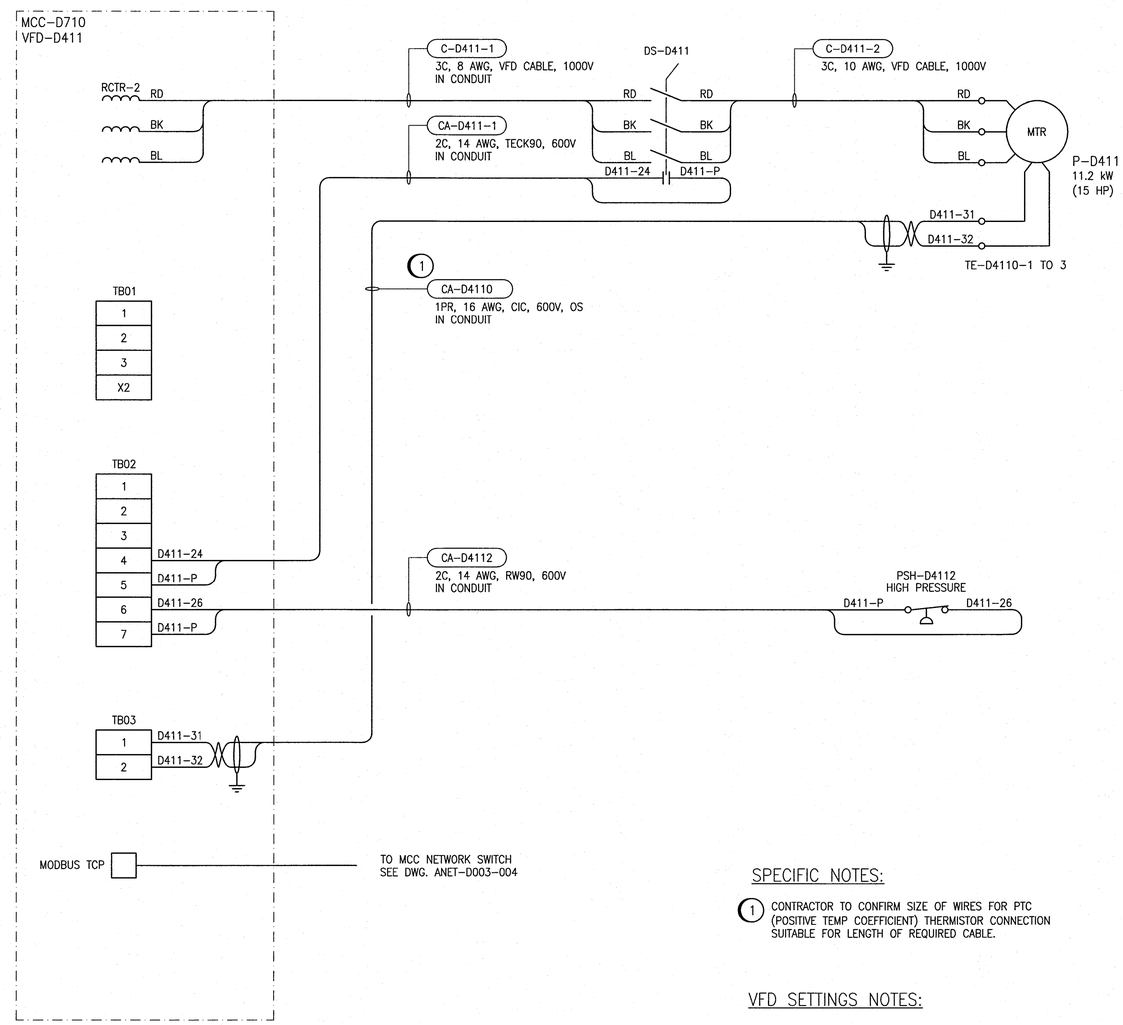

SPECIFIC NOTES:

1. CONTRACTOR TO CONFIRM SIZE OF WIRES FOR PTC (POSITIVE TEMP COEFFICIENT) THERMISTOR CONNECTION SUITABLE FOR LENGTH OF REQUIRED CABLE.

VFD SETTINGS NOTES:

1. IN HAND MODE, THE VFD TO OPERATE AT RATED SPEED.
2. "DISCONNECT OPENED" IS TO ISSUE STOP COMMAND TO THE VFD.
3. PRESSURE SWITCH PSH-D4112 IS TO GENERATE HIGH PRESSURE FAULT SIGNAL.

LEGEND:

△ MCC TERMINAL

⊠ ADP-D830 TERMINAL

REFERENCE DRAWINGS	DESCRIPTION

APEGM Certificate of Authorization
SNC-Lavalin Inc.
No. 4489

NO.	REVISIONS	DATE	DESIGN	CHECK
00	ISSUED FOR CONSTRUCTION – 976-2016	2017/04/05	SSB	TMC

CH2MHILL. KGS GROUP SNC-LAVALIN

DESIGNED BY: S. BOGHOSIAN	CHECKED BY: T. CHURCH
DRAWN BY: G. WILLIAMSON	APPROVED BY: E. RYCZKOWSKI
SCALE: NTS	ISSUED FOR CONSTRUCTION BY: J. SHUMKA
DATE: 2016/11/30	DATE: 2017/04/05
CONSULTANT NO.: 474248	

ENGINEER'S SEAL
PROVINCE OF MANITOBA
T. M. CHURCH
Member
32682
REGISTERED PROFESSIONAL ENGINEER
Apr. 4, 2017

Winnipeg
THE CITY OF WINNIPEG
WATER AND WASTE DEPARTMENT

SOUTH END WATER POLLUTION CONTROL CENTRE
SEWPCC UPGRADING/EXPANSION PROJECT
ELECTRICAL – MOTOR STARTER SCHEMATIC
FERMENTERS/THICKENERS
P-D411 FSL RDT FEED PUMP

CITY DRAWING NUMBER	SHEET	REV.	SIZE
1-0102-EMCL-D411	001	00	A1

PLOT DATE: Mar 28, 2017 – 11:27am
FILE NAME: 1-0102-EMCL-D411.dwg

LAST SAVE: 2017/03/28 – 11:27am
PATH: C:\pw_workdir\ch2mhill_wbg\sh043264\d0416219\1-0102-EMCL-D411.dwg