A1 SIZE – 594mm x 841mm

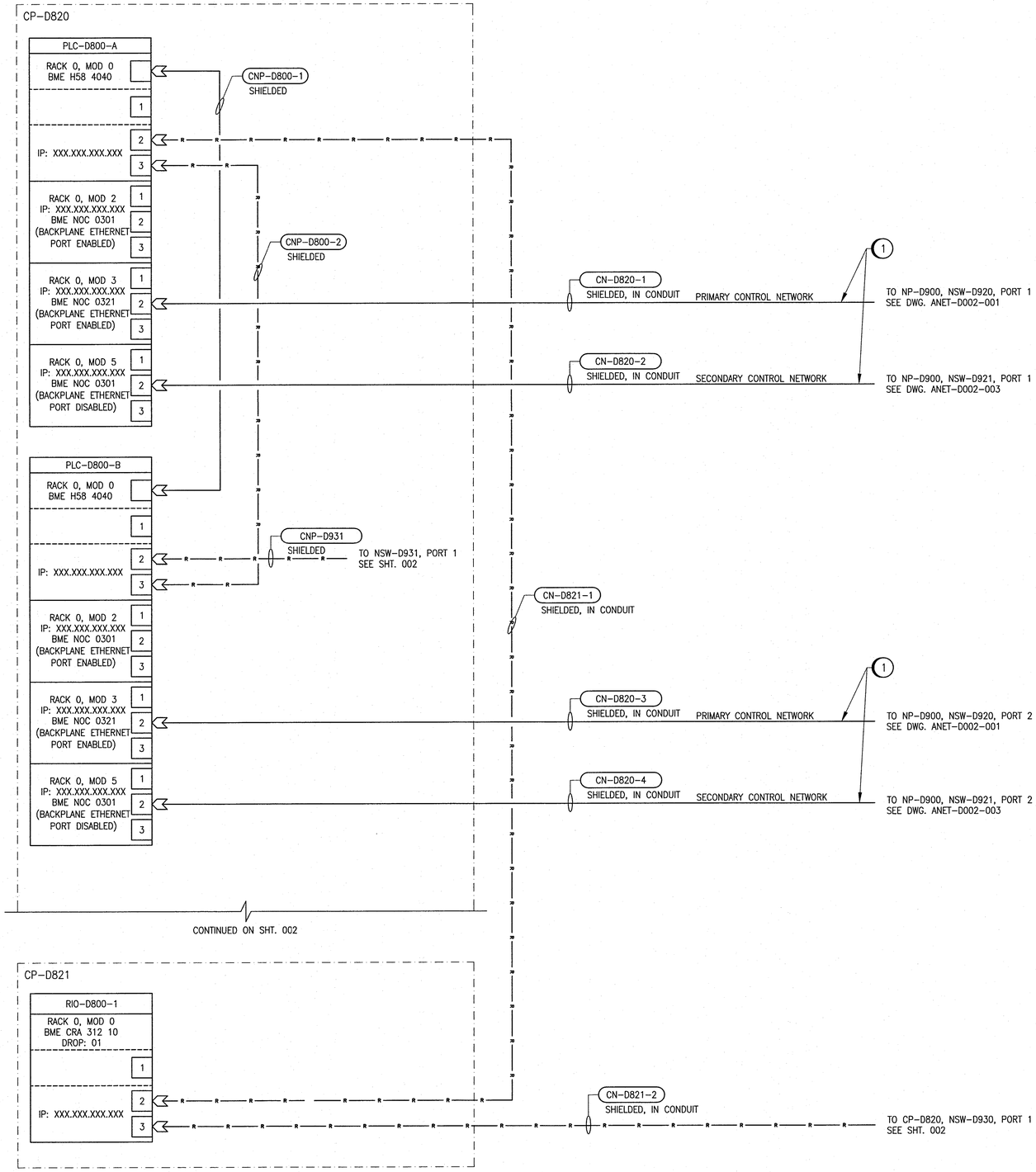

LEGEND:

- RJ45 PORT OR PATCH PANEL
- FIBRE PORT OR PATCH PANEL
- WALL PLATE RJ45 JACK
- CAT6 CABLE, PART OF DEVICE NETWORK RIO RING
- CAT6 CABLE, PART OF DEVICE NETWORK DIO SUB-RING
- CAT6 CABLE
- RJ45 CONNECTOR UNSHIELDED
- RJ45 CONNECTOR SHIELDED

GENERAL NOTES:

1. PRIMARY, SECONDARY CONTROL AND DEVICE NETWORK RINGS OUTGOING AND RETURN CABLES TO BE RUN WITH A MINIMUM SEPARATION OF 1.22m WHERE CABLES ARE INSTALLED HORIZONTALLY AND 0.3m WHERE THE CABLES ARE INSTALLED VERTICALLY. THE MINIMUM SEPARATION IS NOT REQUIRED WHILE THE CABLES ARE INSIDE CABINETS OR PLINTHS.

SPECIFIC NOTES:

(1) PRIMARY CONTROL NETWORK CABLES CN-D820-1 AND CN-D820-3 TO BE RUN WITH A MINIMUM SEPARATION (1.22m WHERE THE CABLES ARE INSTALLED HORIZONTALLY AND 0.3m WHERE THE CABLES ARE INSTALLED VERTICALLY) TO SECONDARY CONTROL NETWORK CABLES CN-D820-2 AND CN-D820-4. THE MINIMUM SEPARATION IS NOT REQUIRED WHILE THE CABLES ARE INSIDE CABINETS OR PLINTH.

REFERENCE DRAWINGS	DESCRIPTION
1-0102-ABDG-D001	CONTROL SYSTEM ARCHITECTURE, FERMENTERS/THICKENERS/BIOFILTERS

APEGM Certificate of Authorization
SNC-Lavalin Inc.
No. 4489

NO.	REVISIONS	DATE	DESIGN	CHECK
00	ISSUED FOR CONSTRUCTION – 976-2016	2017/04/05	PC	TMC

CH2MHILL. SNC·LAVALIN KGS GROUP

DESIGNED BY: P. CHICATUN	CHECKED BY: T. CHURCH
DRAWN BY: M. WANG	APPROVED BY: E. RYCZKOWSKI
SCALE: NTS	ISSUED FOR CONSTRUCTION BY: J. SHUMKA
DATE: 2016/08/15	DATE: 2017/04/05
CONSULTANT NO.: 474248	

ENGINEER'S SEAL
PROVINCE OF MANITOBA
CHICATUN
Member 30307
REGISTERED PROFESSIONAL ENGINEER
APR. 4, 2017
REV. 00

Winnipeg
THE CITY OF WINNIPEG
WATER AND WASTE DEPARTMENT

SOUTH END WATER POLLUTION CONTROL CENTRE
SEWPCC UPGRADING/EXPANSION PROJECT
AUTOMATION – NETWORK DIAGRAM
FERMENTERS/THICKENERS/BIOFILTERS
DEVICE NETWORK

CITY DRAWING NUMBER	SHEET	REV.	SIZE
1-0102-ANET-D003	001	00	A1

PLOT DATE: Apr 01, 2017 – 10:45am
FILE NAME:1-0102-ANET-D003-001.dwg

LAST SAVE: 2017/04/01 – 10:45am
PATH: C:\pw_workdir\ch2mhill_wbg\sh043264\d0356273\1-0102-ANET-D003-001.dwg