A1 SIZE – 594mm x 841mm

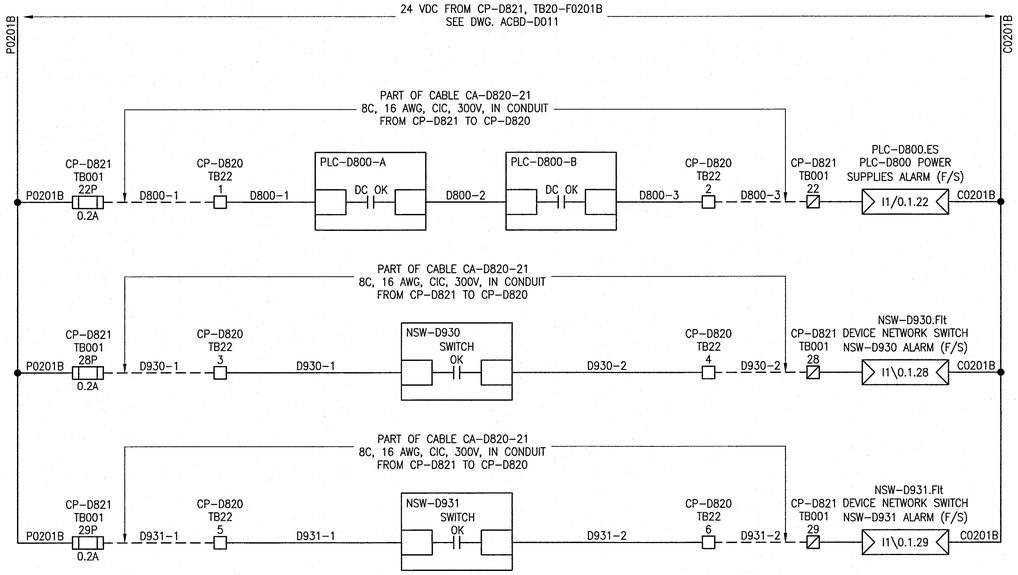

TERMINAL LAYOUT TB22

1
2
3
4
5
6

LEGEND:

☐ CP-D820 TERMINAL

☑ CP-D821 TERMINAL

REFERENCE DRAWINGS	DESCRIPTION
–	–

APEGM Certificate of Authorization
SNC-Lavalin Inc.
No. 4489

NO.	REVISIONS	DATE	DESIGN	CHECK
00	ISSUED FOR CONSTRUCTION – 976-2016	2017/04/05	MW	PC

CH2MHILL. SNC·LAVALIN KGS GROUP

DESIGNED BY: M. WANG	CHECKED BY: P. CHICATUN
DRAWN BY: B. DE GUZMAN	APPROVED BY: E. RYCZKOWSKI
SCALE: NTS	ISSUED FOR CONSTRUCTION BY: J. SHUMKA
DATE: 2016/08/16	DATE: 2017/04/05
CONSULTANT NO.: 474248	

ENGINEER'S SEAL
PROVINCE OF MANITOBA
CHICATUN
Member
30307
REGISTERED PROFESSIONAL ENGINEER
Apr 4, 2017
REVIEW

Winnipeg
THE CITY OF WINNIPEG
WATER AND WASTE DEPARTMENT

SOUTH END WATER POLLUTION CONTROL CENTRE
SEWPCC UPGRADING/EXPANSION PROJECT
AUTOMATION – WIRING DIAGRAM
BIOREACTORS/BLOWER BUILDING
CP-D820 MISCELLANEOUS WIRING

CITY DRAWING NUMBER	SHEET	REV.	SIZE
1-0102-ACBD-D005	001	00	A1

PLOT DATE: Apr 01, 2017 – 10:11am
FILE NAME:1-0102-ACBD-D005.dwg

LAST SAVE: 2017/04/01 – 10:11am
PATH: C:\pw_workdir\ch2mhill_wbg\sh043264\d0356273\1-0102-ACBD-D005.dwg