A1 SIZE – 594mm x 841mm

GENERAL NOTES:

1. THE WIRING DIAGRAMS SHOWN IN THIS DRAWING ARE BASED ON OUELLET THERMOSTATS, RELAYS, AND HEATERS (UNLESS INDICATED OTHERWISE).
2. REFER TO MECHANICAL DRAWINGS AND DATASHEETS FOR HEATER MODEL AND PART NUMBERS.

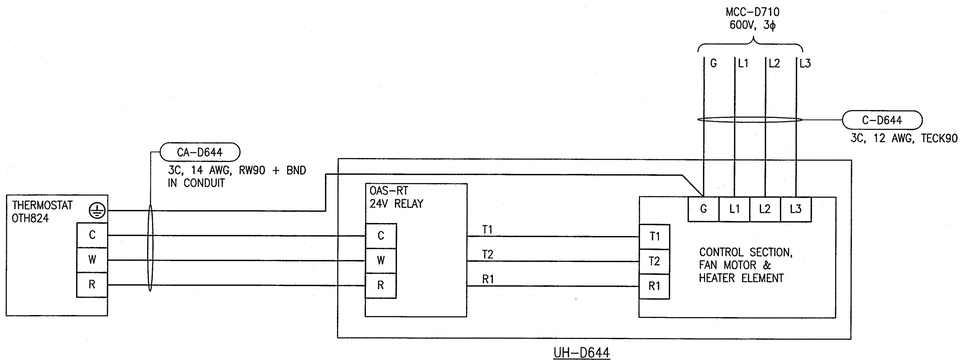

DETAIL 1 : WIRING DIAGRAM FOR UNIT HEATER UH–D644

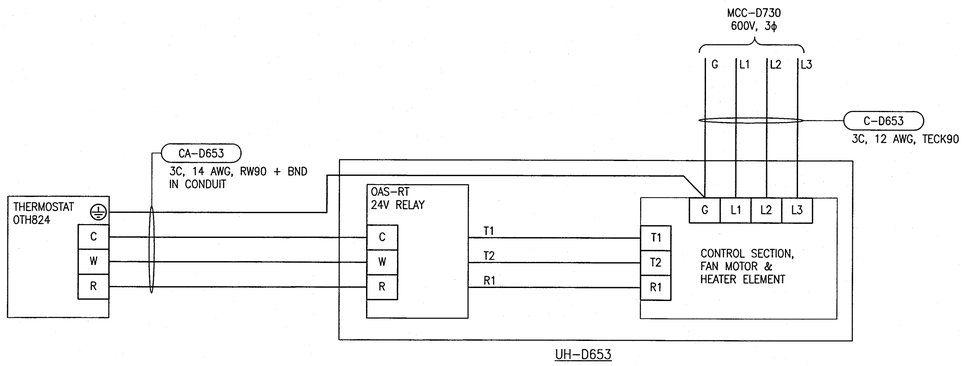

DETAIL 2 : WIRING DIAGRAM FOR UNIT HEATER UH–D653

HEATER SCHEDULE

EQUIPMENT TAG	ROOM NUMBER	EQUIPMENT TYPE	PANEL NAME	CIRCUIT NUMBER	WIRE
UH–D644	ELECTRICAL ROOM A, D–102	UNIT HEATER	MCC–D710	–	3C, 12 AWG, TECK90
UH–D653	ELECTRICAL ROOM B, D–105	UNIT HEATER	MCC–D730	–	3C, 12 AWG, TECK90

DRAWING NUMBER	REFERENCE DRAWINGS
1–0102–ESLD–D003	SINGLE LINE DIAGRAM, MCC–D730
1–0102–ESLD–D001	SINGLE LINE DIAGRAM, MCC–D710

APEGM Certificate of Authorization
SNC-Lavalin Inc.
No. 4489

NO.	REVISIONS	DATE	DESIGN	CHECK
00	ISSUED FOR CONSTRUCTION – 976–2016	2017/04/05	WE	DEB

CH2MHILL. SNC·LAVALIN KGS GROUP

DESIGNED BY: V. ELIMBAN
CHECKED BY: E. RYCZKOWSKI
DRAWN BY: MJ. PERSSON
APPROVED BY: D. BECKER
SCALE: NTS
ISSUED FOR CONSTRUCTION BY: J. SHUMKA
DATE: 2016/08/23
DATE: 2017/04/05
CONSULTANT NO.: 474248

ENGINEER'S SEAL
PROVINCE OF MANITOBA
D.E. BECKER
Member
23646
REGISTERED PROFESSIONAL ENGINEER
April 5/2017

Winnipeg
THE CITY OF WINNIPEG
WATER AND WASTE DEPARTMENT

SOUTH END WATER POLLUTION CONTROL CENTRE
SEWPCC UPGRADING/EXPANSION PROJECT
ELECTRICAL – WIRING DIAGRAM
FERMENETERS/THICKENERS
UNIT HEATERS

CITY DRAWING NUMBER	SHEET	REV.	SIZE
1–0102–EWDG–D003	001	00	A1

LAST SAVE: 2017/03/24 – 2:24pm
PATH: C:\Users\persm2\DWG\1-0102-EWDG-D003.dwg

PLOT DATE: Mar 24, 2017 – 2:24pm
FILE NAME: 1–0102–EWDG–D003.dwg