A1 SIZE – 594mm x 841mm

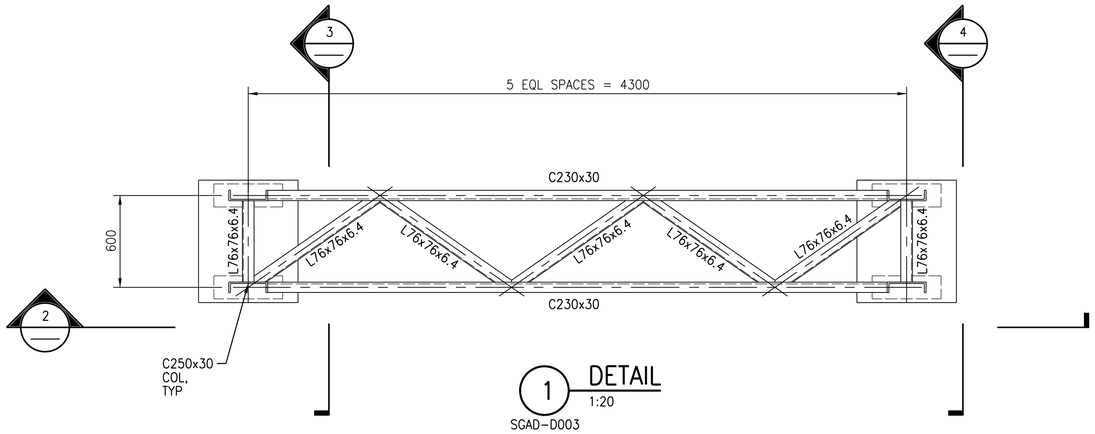

1 DETAIL
1:20
SGAD-D003

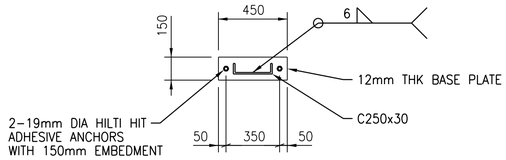

7 DETAIL
1:20

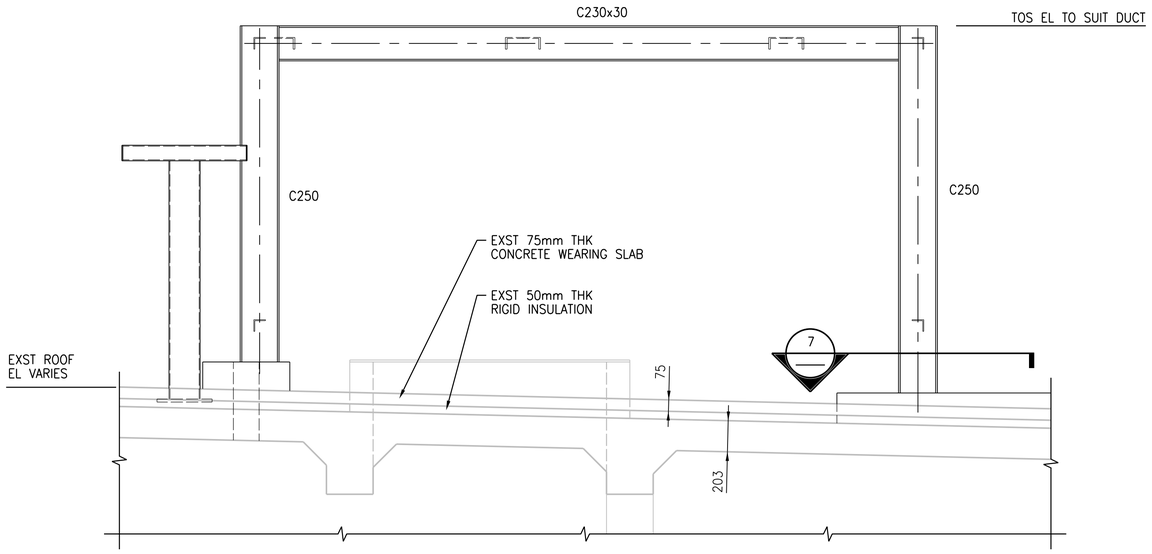

2 DETAIL
1:20

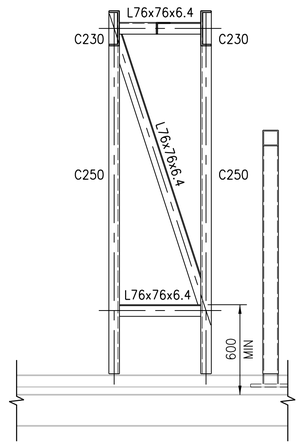

3 DETAIL
1:20

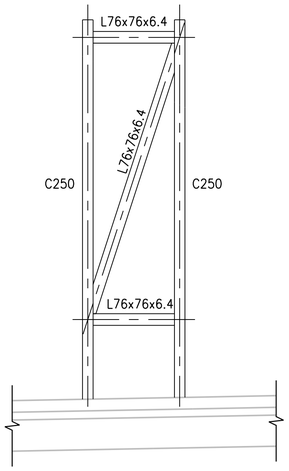

4 DETAIL
1:20

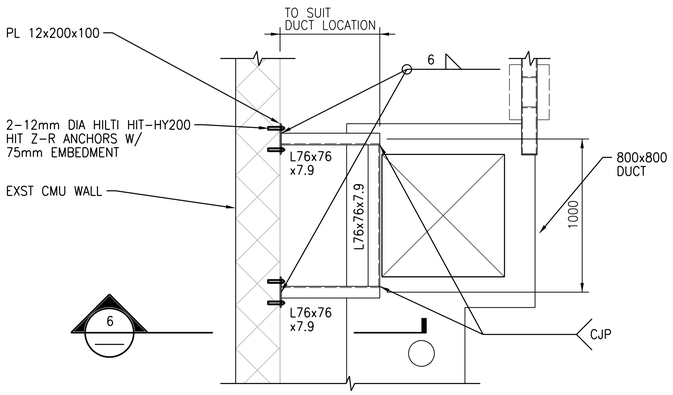

5 DETAIL
1:20
SGAD-D003

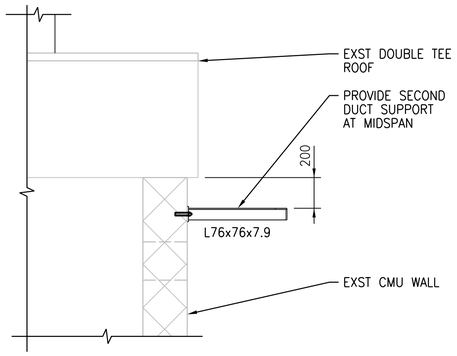

6 DETAIL
1:20

APEGM
Certificate of Authorization
CH2M HILL Canada Ltd.
No. 1441

NO.	REVISIONS	DATE	DESIGN	CHECK
00	ISSUED FOR CONSTRUCTION – 976-2016	2017/04/05	G.O.	J.C.

CH2MHILL. SNC·LAVALIN KGS GROUP

DESIGNED BY: J. THANNICKAL	CHECKED BY: E. LUI
DRAWN BY: G. OMORI	APPROVED BY: H.T. FREIHAMMER
SCALE: AS NOTED	ISSUED FOR CONSTRUCTION BY: J. SHUMKA
DATE: 2017/04/05	DATE: 2017/04/05
CONSULTANT NO.: 474248	

ENGINEER'S SEAL
APR 5, 2017
PROVINCE OF MANITOBA
LUI
Member
37003
REGISTERED PROFESSIONAL ENGINEER

Winnipeg
THE CITY OF WINNIPEG
WATER AND WASTE DEPARTMENT

SOUTH END WATER POLLUTION CONTROL CENTRE
SEWPCC UPGRADING/EXPANSION PROJECT
STRUCTURAL
FERMENTERS
DETAILS

CITY DRAWING NUMBER	SHEET	REV.	SIZE
1-0102-SDTL-D002	001	00	A1

PLOT DATE: 2017\04\02
FILE NAME: 1-0102-SDTL-D002.dgn

©CH2M HILL 2017. ALL RIGHTS RESERVED.