A1 SIZE – 594mm x 841mm

ALUMINUM		
NOMINAL BEAM DEPTH, INCHES	ROWS OF BOLTS	LENGTH OF ANGLE
250	3	190
175–200–225	2	125
125–150	1	75
100	1	70

NOTES:
1. NUMBER OF ROWS IS EQUAL TO NUMBER OF BOLTS TO ENCLOSED WEB.
2. ALL FRAMING CONNECTIONS SHALL CONFORM TO SCHEDULE UNLESS DETAILED OTHERWISE ON FRAMING PLANS.

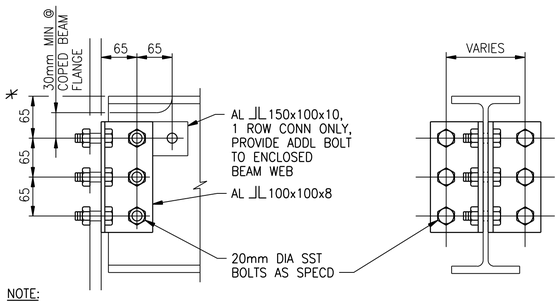

NOTE:
* 65mm DIMENSION TYPICAL EXCEPT 50mm FOR 100mm BEAM.

TYPICAL BEAM CONNECTION – ALUMINUM

NTS

0514–020

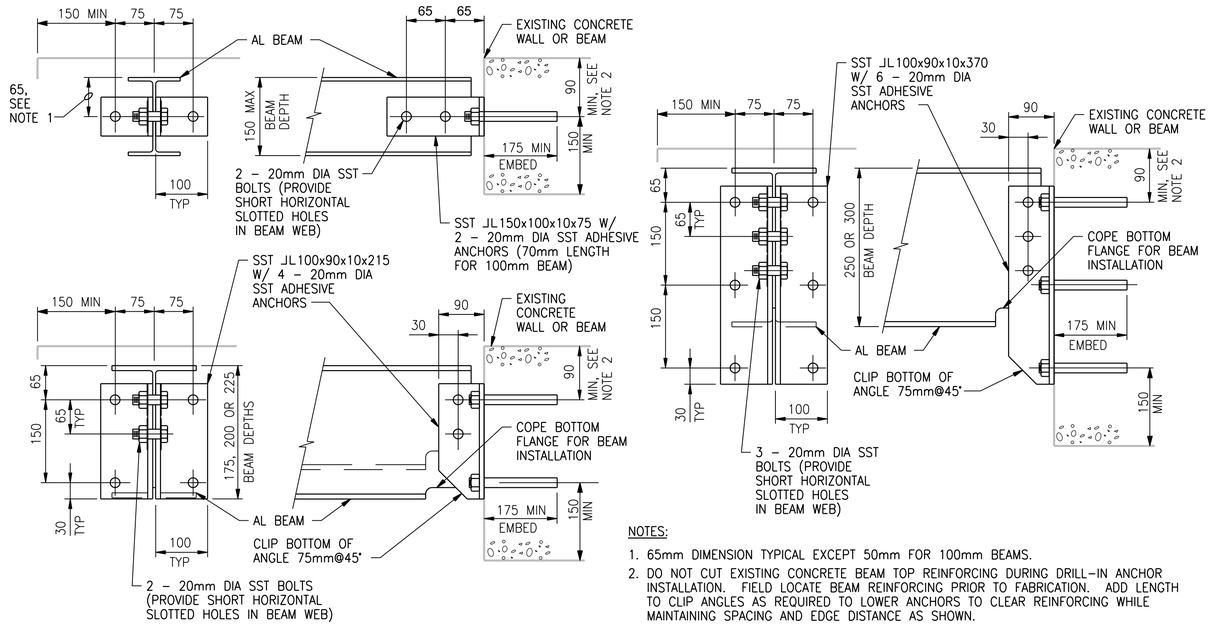

NOTES:
1. 65mm DIMENSION TYPICAL EXCEPT 50mm FOR 100mm BEAMS.
2. DO NOT CUT EXISTING CONCRETE BEAM TOP REINFORCING DURING DRILL–IN ANCHOR INSTALLATION. FIELD LOCATE BEAM REINFORCING PRIOR TO FABRICATION. ADD LENGTH TO CLIP ANGLES AS REQUIRED TO LOWER ANCHORS TO CLEAR REINFORCING WHILE MAINTAINING SPACING AND EDGE DISTANCE AS SHOWN.
3. WHERE BOTH ENDS OF BEAM ARE ATTACHED TO A WALL, PROVIDE LONG HORIZONTALLY SLOTTED HOLES IN BEAM WEB AT ONE END. TIGHTEN NUTS SNUG TIGHT, BACK OFF 1/2 TURN, AND LOCK WITH DOUBLE NUT.

BEAM/WALL CONNECTION – ALUMINUM

NTS

0514–056

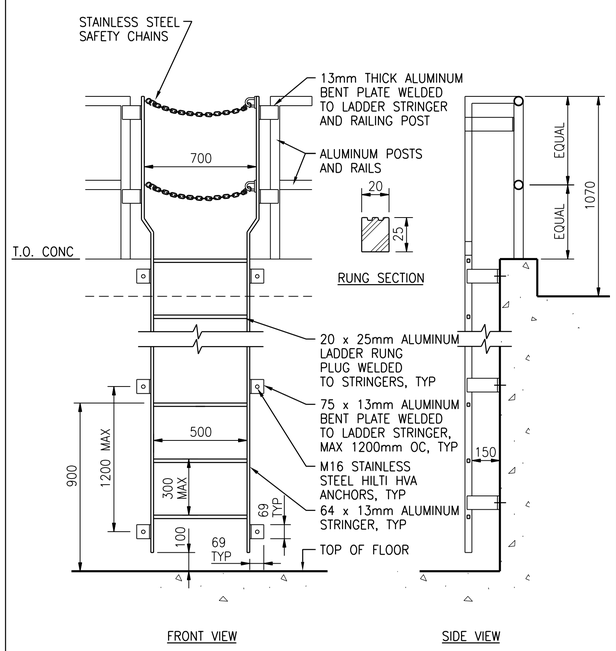

TYPICAL ALUMINUM LADDER

NTS

0552–830

©CH2M HILL 2017. ALL RIGHTS RESERVED.

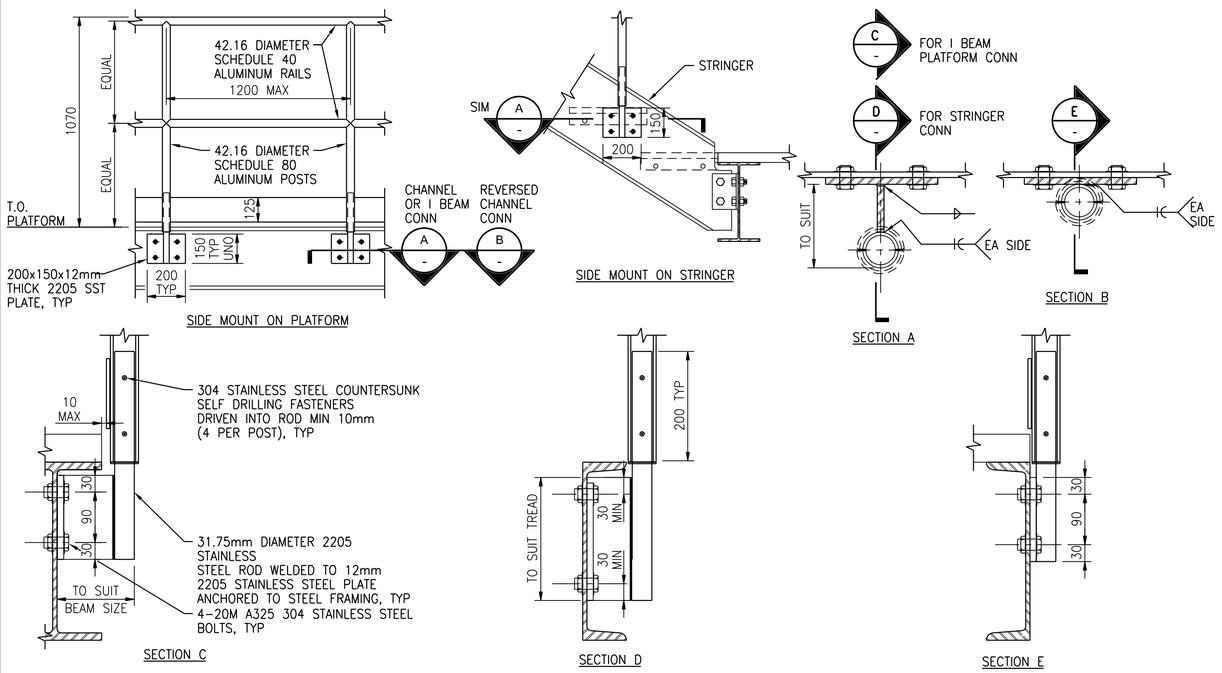

NOTE:
MINIMUM YIELD STRENGTH OF STAINLESS STEEL ROD AND PLATE TO BE 450 KPa. WELD ROD AND PLATE WITH A FILLER METAL OF MATCHING OR GREATER YIELD STRENGTH.

SIDE MOUNTED GUARD ON ALUMINUM FRAMING

NTS

0552–818

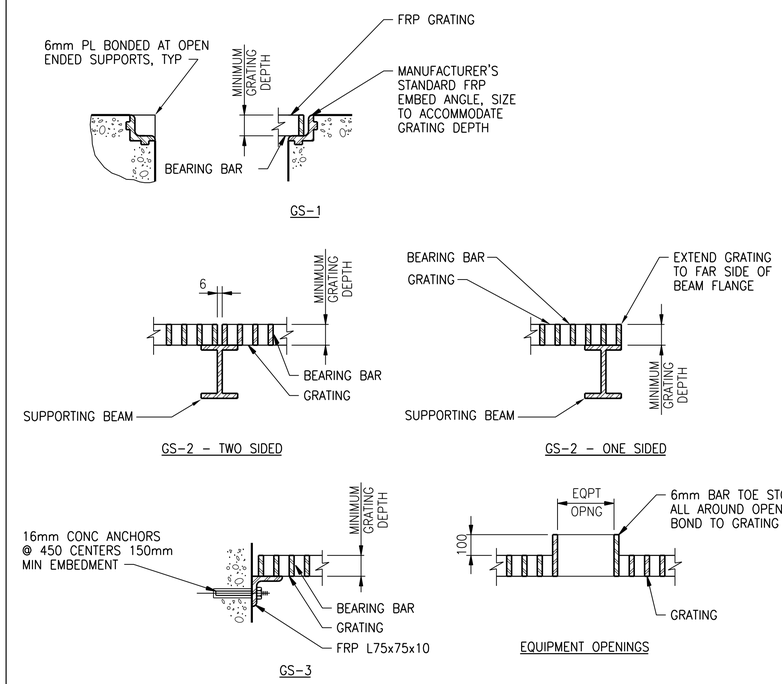

GENERAL NOTES:
1. EXTEND GRATING CONTINUOUSLY OVER GATE GUIDES AND GATES.
2. NOTCH GRATING SUPPORTS AT GATES AS REQUIRED.
3. GRATING SPAN ←→ SEE PLAN.
4. WIDTH OF GRATING SECTIONS SHALL NOT EXCEED 900mm.
5. SHOP DRAWINGS BASED ON FIELD DIMENSIONS SHALL BE SUBMITTED TO THE ENGINEER PRIOR TO FABRICATION.
6. UNLESS NOTED OTHERWISE ON PLANS, GRATING THICKNESS SHALL BE AS TABULATED IN TABLE BELOW
7. DESIGN LL = 4.8 kPa
8. PROVIDE SST GRATING FASTENERS AS REQUIRED.
9. THE HORIZONTAL CLEARANCE BETWEEN THE GRATING AND GRATING SUPPORTS SHALL NOT BE LESS THAN 6mm NOR GREATER THAN 13mm.
10. ALL GRATING SECTIONS, WHEN IN PLACE, SHALL ALWAYS BE FIRMLY ANCHORED TO THEIR SUPPORTS.
11. PROVIDE MINIMUM 38mm BEARING FOR ALL FRP GRATING.

FOOT TRAFFIC		
MAXIMUM SPAN	MINIMUM GRATING DEPTH	* GRATING TYPE
1050	40	M OR P
1200	40	M OR P
1350	40	M OR P
1500	50	P
1650	50	P

* M = MOLDED GRATING
P = PULTRUDED GRATING

STANDARD FRP GRATING

NTS

0682–030

APEGM
Certificate of Authorization
CH2M HILL Canada Ltd.
No. 1441

NO.	REVISIONS	DATE	DESIGN	CHECK
02	ISSUED FOR CONSTRUCTION – 976–2016	2017/04/05	G.O.	J.C.
01	ISSUED FOR CONSTRUCTION	10/2015	G.O.	J.C.
00	ISSUED FOR TENDER	08/2015	G.O.	J.C.

CH2MHILL
SNC·LAVALIN
KGS GROUP CONSULTING ENGINEERS

DESIGNED BY: J. THANNICKAL
CHECKED BY: E. LUI
DRAWN BY: G.OMORI
APPROVED BY: H.T. FREIHAMMER
SCALE: NTS
ISSUED FOR CONSTRUCTION BY: J. SHUMKA
DATE: 2017/04/05
DATE: 2017/04/05
CONSULTANT NO.: 474248

ENGINEER'S SEAL
APR 5, 2017
PROVINCE OF MANITOBA
E. LUI
Member
37003
REGISTERED PROFESSIONAL ENGINEER

Winnipeg
THE CITY OF WINNIPEG
WATER AND WASTE DEPARTMENT

SOUTH END WATER POLLUTION CONTROL CENTRE
SEWPCC UPGRADING/EXPANSION PROJECT
STRUCTURAL
STANDARD DETAILS (12)

CITY DRAWING NUMBER: 1–0102–SDTL–A013
SHEET:
REV.: 02
SIZE: A1

PLOT DATE: 2017\03\29
FILE NAME: 1–0102–SDTL–A013.dgn