A1 SIZE – 594mm x 841mm

ELECTRONIC CIRCUIT PROTECTION SCHEDULE			
TB	IDENTIFIER	SIZE	RATING
TB20	CB–0911	12.5x80mm	2A CLASS 2
	CB–0912	12.5x80mm	3A CLASS 2
	CB–0913	12.5x80mm	1A CLASS 2
TB21	CB–2911	12.5x80mm	2A CLASS 2
	CB–2912	12.5x80mm	1A CLASS 2
TB22	CB–4711	12.5x80mm	2A CLASS 2
	CB–4712	12.5x80mm	2A CLASS 2
NOTES			

ADP–D831 POWER CONSUMPTION SCHEDULE AT 24 VDC				
LOAD	RM01 CURRENT (mA)	RM02 CURRENT (mA)	RM03 CURRENT (mA)	NOTES
ND–D840–2 RACK	1000	–	800	2
ND–D840–2 SEGMENT D851	101.5	–	–	1
ND–D841–2 RACK	–	800	800	2
ND–D841–2 SEGMENT D861	–	71	–	1
TOTAL	1101.5	871	1600	

NOTES
1. BASED ON DATA SHEET.
2. ESTIMATED.

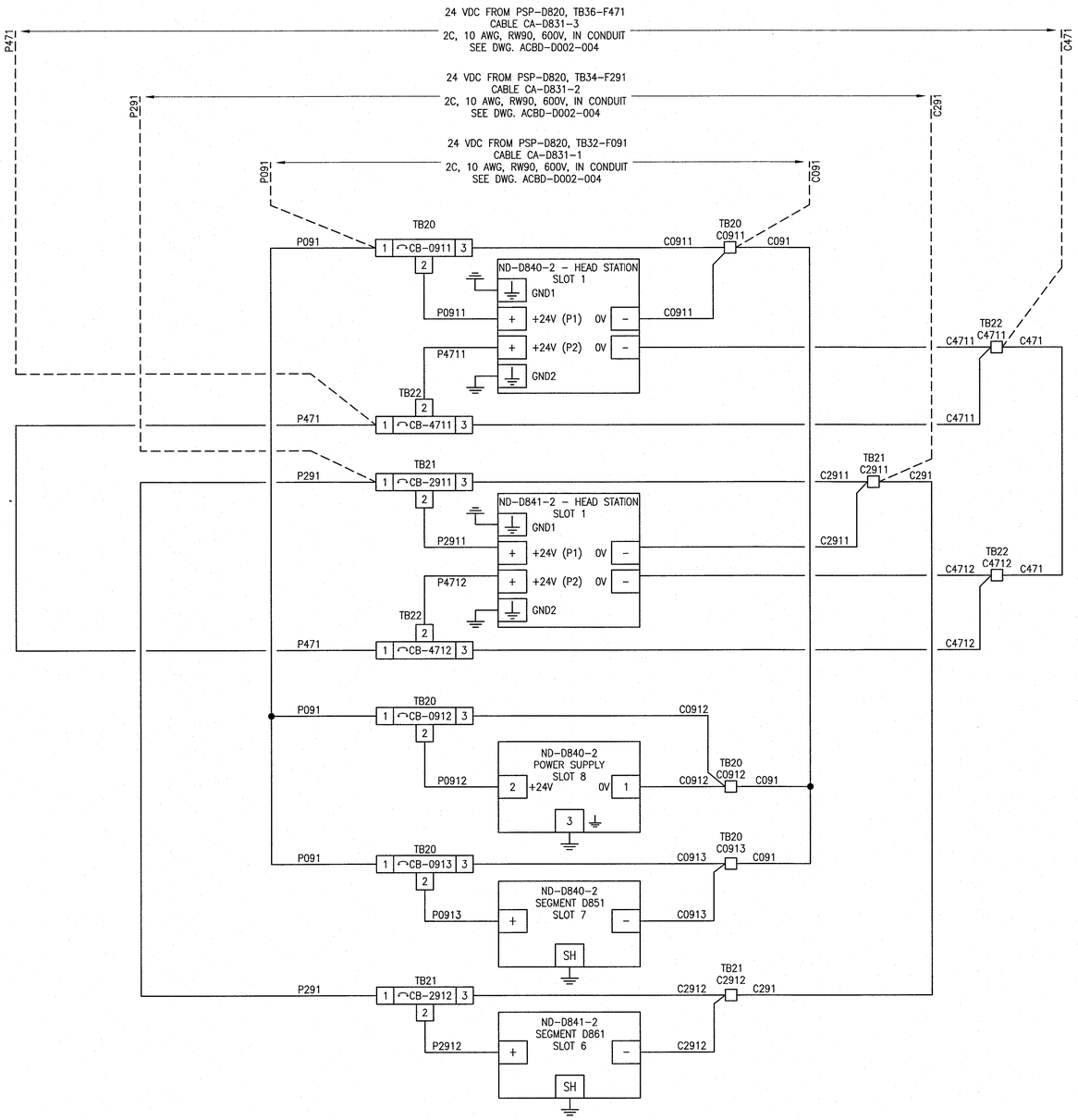

TERMINAL LAYOUT TB20

CB–0911
CB–0912
CB–0913
C0911
C0912
C0913

TERMINAL LAYOUT TB21

CB–2911
CB–2912
C2911
C2912

TERMINAL LAYOUT TB22

CB–4711
CB–4712
C4711
C4712

LEGEND:

⏚ EQUIPMENT GROUND

REFERENCE DRAWINGS	DESCRIPTION
–	–

APEGM Certificate of Authorization
SNC-Lavalin Inc.
No. 4489

NO.	REVISIONS	DATE	DESIGN	CHECK
00	ISSUED FOR CONSTRUCTION – 976–2016	2017/04/05	MW	PC

CH2MHILL. SNC·LAVALIN KGS GROUP CONSULTING ENGINEERS

DESIGNED BY: M. WANG	CHECKED BY: P. CHICATUN
DRAWN BY: B. DE GUZMAN	APPROVED BY: E. RYCZKOWSKI
SCALE: NTS	ISSUED FOR CONSTRUCTION BY: J. SHUMKA
DATE: 2016/08/19	DATE: 2017/04/05
CONSULTANT NO.: 474248	

ENGINEER'S SEAL
PROVINCE OF MANITOBA
CHICATUN
Member
30307
REGISTERED PROFESSIONAL ENGINEER
APR. 4 2017

Winnipeg
THE CITY OF WINNIPEG
WATER AND WASTE DEPARTMENT

SOUTH END WATER POLLUTION CONTROL CENTRE
SEWPCC UPGRADING/EXPANSION PROJECT
AUTOMATION – POWER DISTRIBUTION SCHEMATIC
FERMENTERS/THICKENERS/BIOFILTERS
ADP–D831 PROFIBUS EQUIPMENT CABINET

CITY DRAWING NUMBER	SHEET	REV.	SIZE
1–0102–ACBD–D062	001	00	A1

PLOT DATE: Apr 01, 2017 – 10:14am
FILE NAME: 1–0102–ACBD–D062.dwg

LAST SAVE: 2017/04/01 – 10:14am
PATH: C:\pw_workdir\ch2mhill_wbg\sh043264\d0356273\1–0102–ACBD–D062.dwg