A1 SIZE – 594mm x 841mm

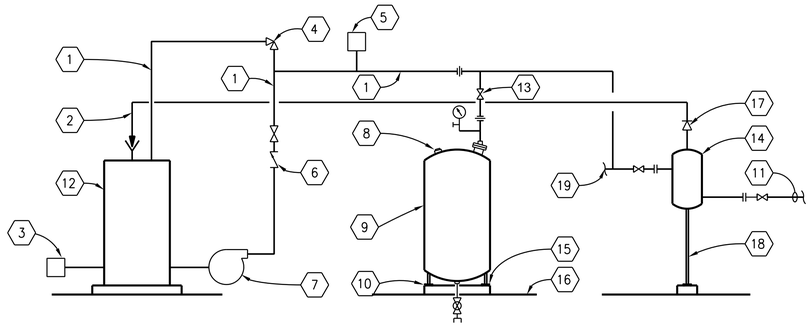

1. 20MM
2. 12MM
3. LOW LEVEL SIGNAL
4. PRESSURE RELIEF VALVE
5. PRESSURE SWITCH
6. CHECK VALVE
7. GLYCOL PUMP
8. AIR CHARGING CONNECTION
9. EXPANSION TANK
10. 12MM ANCHOR BOLTS 100MM MIN EMBEDMENT, TYP OF 3
11. PGS TO PUMP SUCTION
12. GLYCOL FEED TANK
13. SHUT-OFF VALVE WITH LOCK SHIELD
14. AIR SEPARATOR
15. 150MM CONCRETE PAD, TYP OF 3
16. FINISHED FLOOR, TYP OF 3
17. AUTOMATIC AIR VENT
18. FLOOR SUPPORT WHERE AIR SEPARATOR IS LARGER THAN 75MM.
19. FROM GR SYSTEM.

GLYCOL FEED/EXPANSION TANK/AIR SEPARATOR PIPING (2321-450)

NTS

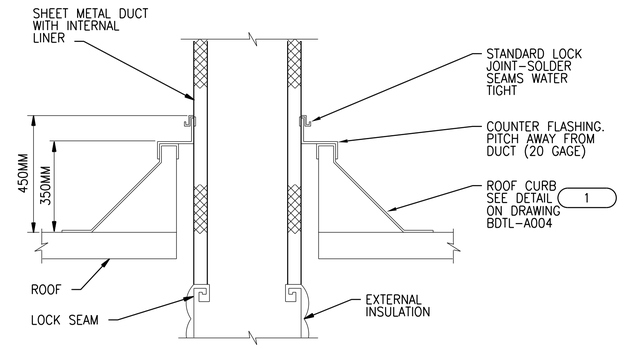

INSULATED DUCT THROUGH ROOF (2305-807)

NTS

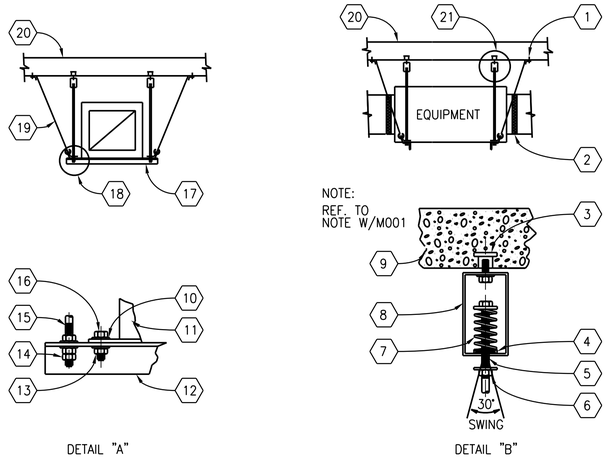

1. ANCHOR BOLT
2. FLEXIBLE CONNECTION (TYP)
3. INSERT
4. NEOPRENE SPRING CUP
5. 10MM STEEL ROD
6. PRECOMPRESSION PLATE NUT
7. 25MM DEFLECTION STEEL SPRING AND RUBBER IN SHEAR ISOLATOR
8. SPRING HOUSING
9. CONC SLAB
10. WASHER (TYP)
11. EQUIPMENT
12. SUPPORT ANGLE 38MM x 38MM x 6MM
13. LOCKNUT
14. NUT (TYP)
15. 10MM STEEL ROD
16. EQUIPMENT ANCHOR POINT 13MM DIA BOLT (MIN 4 PLCS)
17. SUPPORT FRAME
18. SEE DETAIL "A"
19. SLACK AIRCRAFT CABLE (TYP FOR 3)
20. STRUCTURE
21. SEE DETAIL "B" (TYP FOR 4)

SPRING ISOLATED EQUIPMENT MOUNTING (2305-201)

NTS

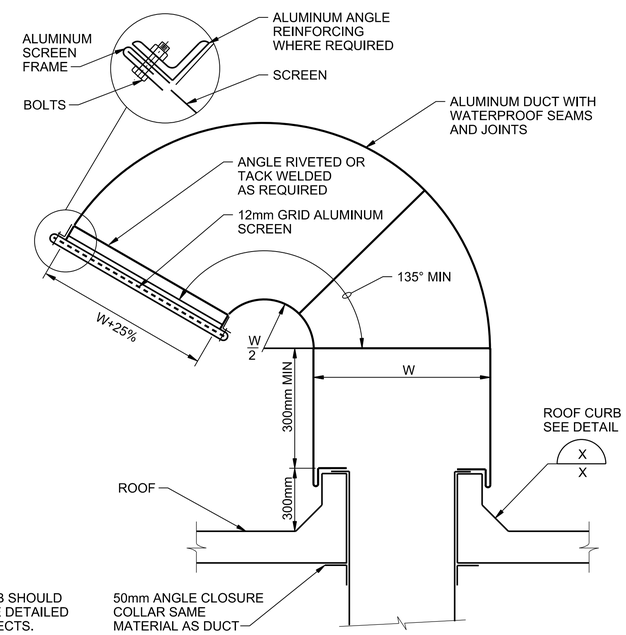

GOOSENECK ROOF INTAKE OR DISCHARGE (2337-402)

NTS

©CH2M HILL 2017. ALL RIGHTS RESERVED.

APEGM
Certificate of Authorization
CH2M HILL Canada Ltd.
No. 1441

NO.	REVISIONS	DATE	DESIGN	CHECK
02	ISSUED FOR CONSTRUCTION – 976-2016	2017/04/05	K.F.	J.C.
01	ISSUED FOR CONSTR – B.O. 899-2015	04/2016	K.F.	J.C.
00	ISSUED FOR ADD. 4 – B.O. 899-2015	03/2016	K.F.	J.C.

CH2MHILL
SNC·LAVALIN
KGS GROUP CONSULTING ENGINEERS

DESIGNED BY: T. TRAN
CHECKED BY: D. CUDDINGTON
DRAWN BY: K. FONG
APPROVED BY: H.T. FREIHAMMER
SCALE: NTS
ISSUED FOR CONSTRUCTION BY: J. SHUMKA
DATE: 2017/04/05
DATE: 2017/04/05
CONSULTANT NO.: 474248

ENGINEER'S SEAL
PROVINCE OF MANITOBA
T.T. TRAN
Member 40578
UNREGISTERED PROFESSIONAL ENGINEER
Apr 11/17

Winnipeg
THE CITY OF WINNIPEG
WATER AND WASTE DEPARTMENT

SOUTH END WATER POLLUTION CONTROL CENTRE
SEWPCC UPGRADING/EXPANSION PROJECT
MECHANICAL
HVAC
STANDARD DETAILS (6)

CITY DRAWING NUMBER	SHEET	REV.	SIZE
1-0102-MDTL-A010		02	A1

PLOT DATE: 2017\03\29
FILE NAME: 1-0102-MDTL-A010.dgn