A1 SIZE – 594mm x 841mm

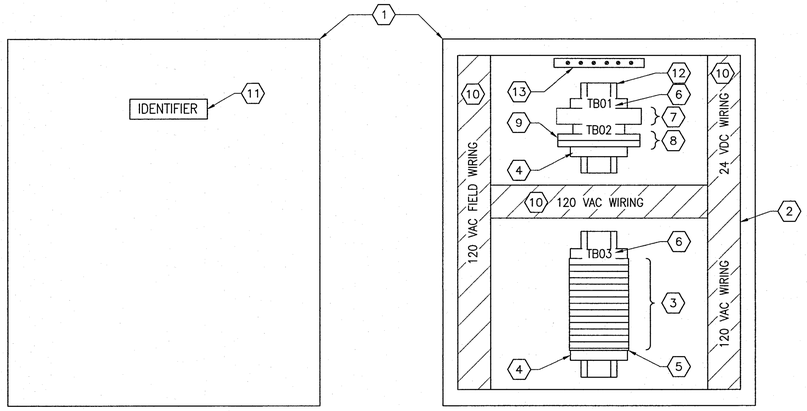


## EXTERIOR PANEL VIEW
1 : 3

## INTERIOR PANEL VIEW
1 : 3

| BILL OF MATERIAL | | | | |
|---|---|---|---|---|
| ITEM | QTY | DESCRIPTION | MANUFACTURER | CATALOG NUMBER |
| 1 | 1 | NEMA 4 ENCL. WALL MOUNT – 356X305X208mm | HOFFMAN | A14128CHNF |
| 2 | 1 | PANEL FOR ITEM 1 | HOFFMAN | A14P12 |
| 3 | AS REQ'D | FEED THROUGH TERMINAL – UT 4–MTD | PHOENIX CONTACT | 3046184 |
| 4 | AS REQ'D | TERMINAL END CLAMP – CLIPFIX 35 | PHOENIX CONTACT | 3022218 |
| 5 | AS REQ'D | TERMINAL END PLATE – D–UT 2,5/4 TWIN | PHOENIX CONTACT | 3047141 |
| 6 | AS REQ'D | TERMINAL BLOCK MARKER – KLM–A | PHOENIX CONTACT | 1004348 |
| 7 | 1 | RELAY MODULE, 24 VDC, SPDT, STANDARD, SCREW TERMINAL SOCKET WITH LED | FINDER | 46.61<br>97.01 |
| 8 | 2 | RELAY MODULE, 120 VAC, SPDT, SCREW TERMINAL | PHOENIX CONTACT | 2966281 |
| 9 | AS REQ'D | RELAY MODULE SEPARATING PLATE | PHOENIX CONTACT | 2966841 |
| 10 | AS REQ'D | NARROW SLOT WIRING DUCT AND COVER, 1.26"x2.12" | PANDUIT | F1X2LG6 |
| 11 | AS REQ'D | LAMACOIDS | – | – |
| 12 | AS REQ'D | 35mm DIN RAIL | PHOENIX CONTACT | 0801733 |
| 13 | 1 | GROUND BAR, 6 TAPS, | ILSCO | 0167–6 |

| JUNCTION BOX SCHEDULE | |
|---|---|
| IDENTIFIER | DESCRIPTION |
| JBA–D6207 | PRESSURIZATION UNIT AHU–D640 INTAKE DAMPER XV–D6207 |
| JBA–D6208 | PRESSURIZATION UNIT AHU–D650 INTAKE DAMPER XV–D6208 |

WIRING DIAGRAM:

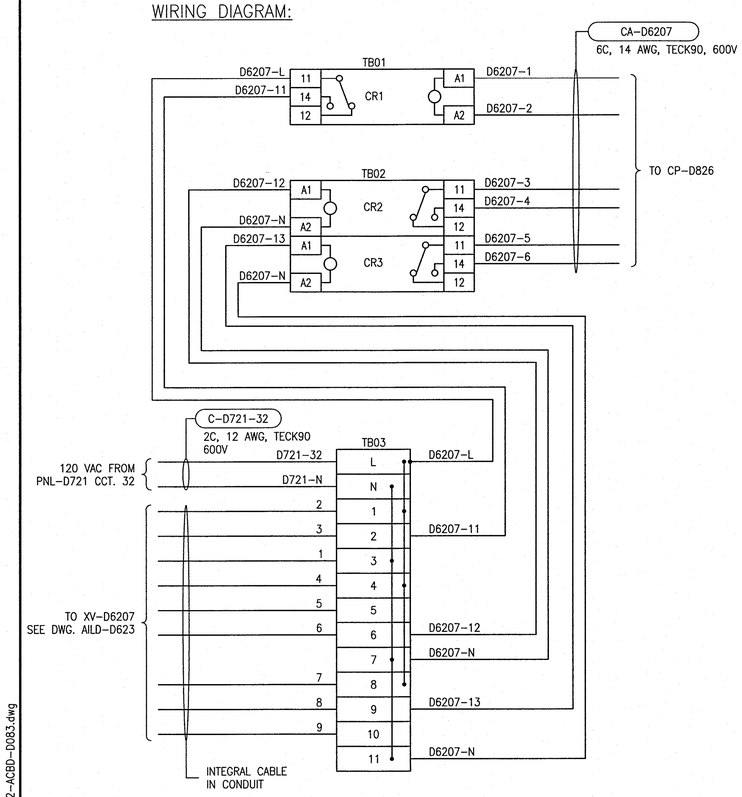


## JBA–D6207

WIRING DIAGRAM:

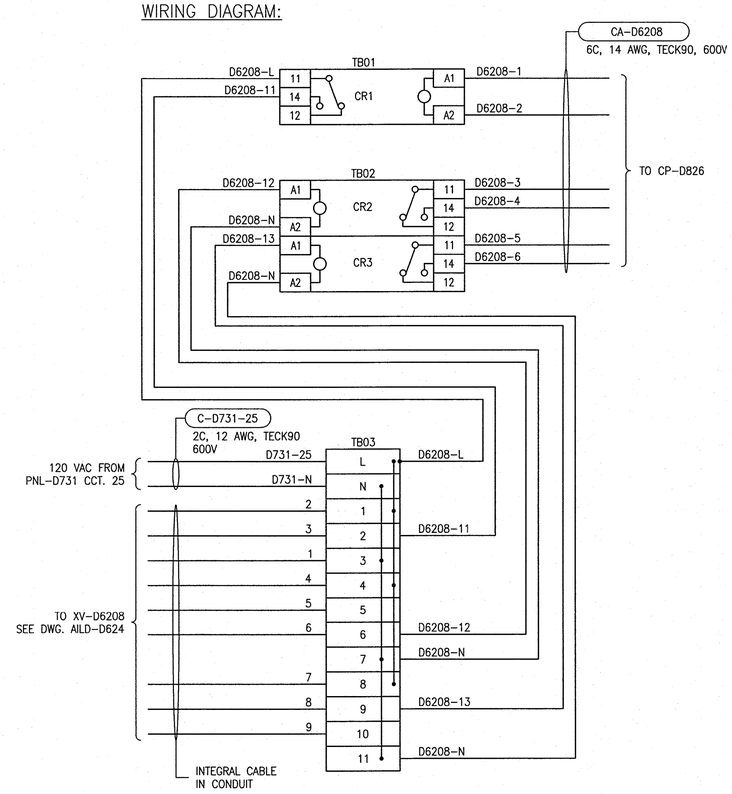


## JBA–D6208

## GENERAL NOTES:

1. ALL POWER WIRING TO BE TEW/MTW 600V, 105°C INSULATION, STRANDED COPPER, 12 AWG OR LARGER WHERE CURRENT REQUIREMENTS DICTATE AS PER CEC REQUIREMENTS.
2. COMPONENTS ARE TO BE LABELED AS SHOWN ON THE DRAWINGS.
3. TEST ALL WIRING AND COMPONENTS FOR FUNCTIONAL OPERATION, CORRECT CONNECTION, CONTINUITY AND INSULATION INTEGRITY. DOCUMENT ALL TEST RESULTS.
4. ALL MAJOR COMPONENTS INSIDE THE PANEL ARE TO BE LABELED WITH LAMACOIDS IN ACCORDANCE WITH MAJOR DESCRIPTIONS ON THE DRAWINGS.
5. PROVIDE WIRE BARREL FERRULES FOR WIRING WHERE POSSIBLE.
6. ALL TERMINAL BLOCKS SHALL BE NUMBERED AS SHOWN IN THE DRAWINGS, COMPLETE WITH GROUP LABELING.
7. ALL WIRES SHALL BE MARKED AS INDICATED ON THE DRAWINGS.
8. JUMPERO BARS SHALL BE USED INSTEAD OF WIRE JUMPERS WHERE POSSIBLE.

| REFERENCE DRAWINGS | DESCRIPTION |
|---|---|
| 1–0102–AILD–D624 | LOOP DIAGRAM, XV–D6208 PRESSURIZATION UNIT INTAKE DAMPER |
| 1–0102–AILD–D623 | LOOP DIAGRAM, XV–D6207 PRESSURIZATION UNIT INTAKE DAMPER |

1:3 30 0 60 120

APEGM Certificate of Authorization
SNC-Lavalin Inc.
No. 4489

| NO. | REVISIONS | DATE | DESIGN | CHECK |
|---|---|---|---|---|
| 00 | ISSUED FOR CONSTRUCTION – 976–2017 | 2017/04/05 | SSB | TMC |

CH2MHILL. SNC·LAVALIN KGS GROUP CONSULTING ENGINEERS

| | |
|---|---|
| DESIGNED BY: S. BOGHOSIAN | CHECKED BY: T. CHURCH |
| DRAWN BY: S. BOGHOSIAN | APPROVED BY: E. RYCZKOWSKI |
| SCALE: 1:3 | ISSUED FOR CONSTRUCTION BY: J. SHUMKA |
| DATE: 2016/09/07 | DATE: 2017/04/05 |
| CONSULTANT NO.: 474248 | |

ENGINEER'S SEAL
PROVINCE OF MANITOBA
TOM CHURCH Member 32682
REGISTERED PROFESSIONAL ENGINEER
Apr. 5, 2017

Winnipeg
THE CITY OF WINNIPEG
WATER AND WASTE DEPARTMENT

SOUTH END WATER POLLUTION CONTROL CENTRE
SEWPCC UPGRADING/EXPANSION PROJECT
AUTOMATION – CABINET LAYOUT
FERMENTERS/THICKENERS
JBA–D6207 AND JBA–D6208 JUNCTION BOXES

| CITY DRAWING NUMBER | SHEET | REV. | SIZE |
|---|---|---|---|
| 1–0102–ACBD–D083 | 001 | 00 | A1 |

LAST SAVE: 2017/04/01 – 10:15am
PATH: C:\pw_workdir\ch2mhill_wbg\sh043264\d0356273\1–0102–ACBD–D083.dwg

PLOT DATE: Apr 01, 2017 – 10:15am

FILE NAME: 1–0102–ACBD–D083.dwg