A1 SIZE – 594mm x 841mm

## SCHEMATIC DIAGRAM

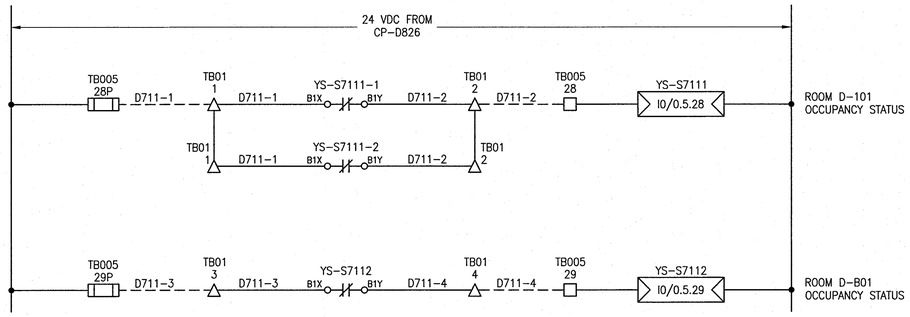


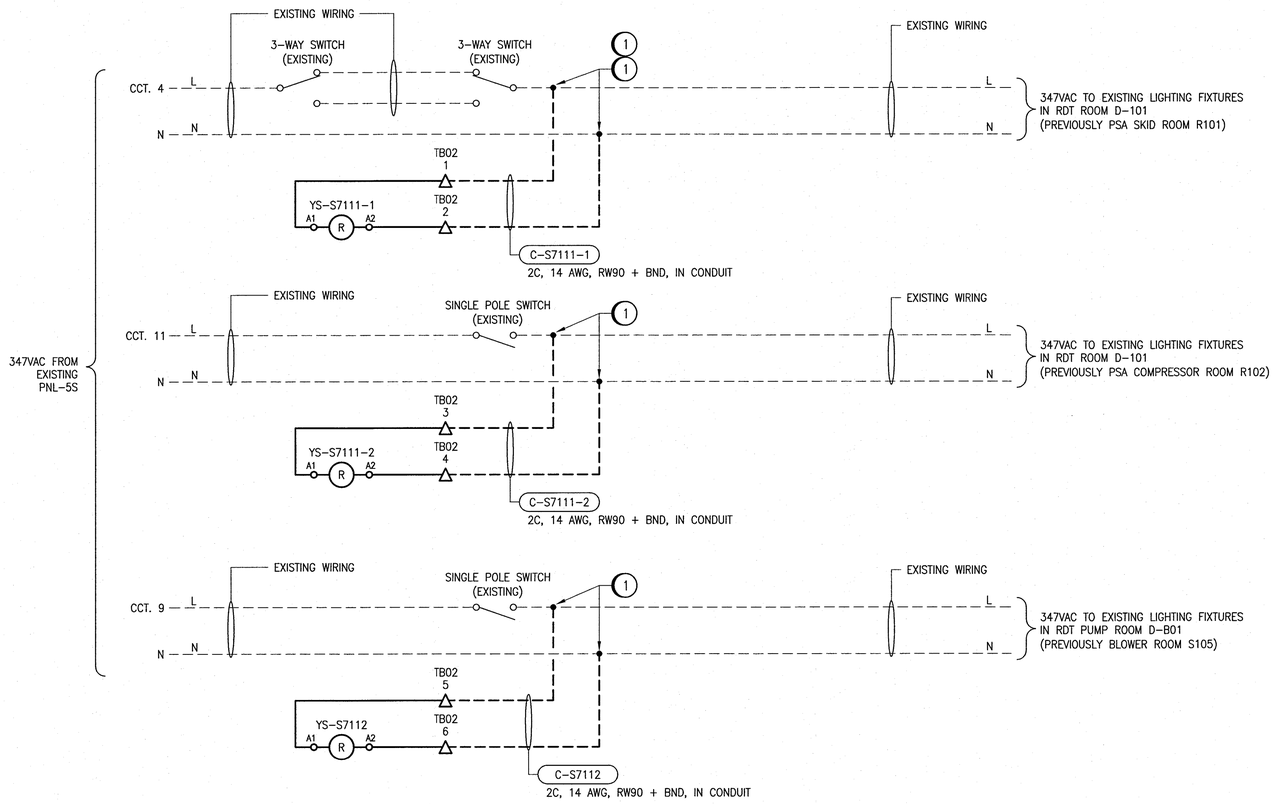


## WIRING DIAGRAM

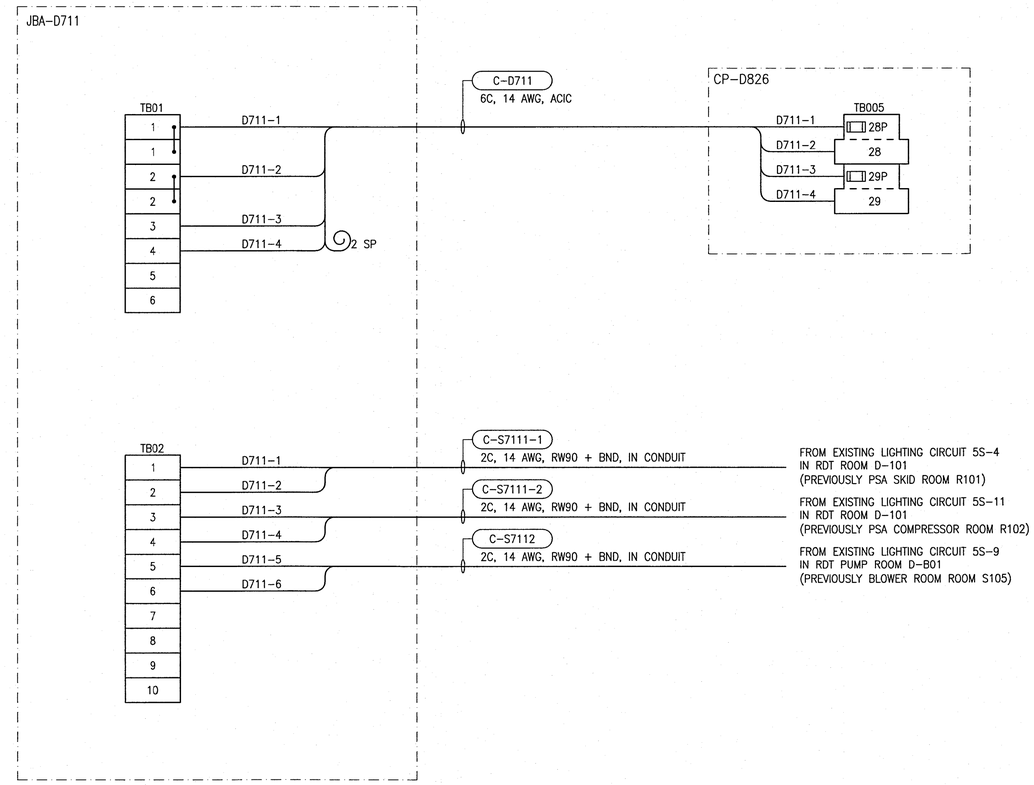


### SPECIFIC NOTES:

1. CONTRACTOR TO INTERCEPT EXISTING LIGHTING CIRCUITS WITHIN THE RDT ROOM D-101 AND RDT PUMP ROOM D-B01 (AS A MEANS TO DETECT OCCUPANCY OF THE SPACE). PROVIDE 2C, 14 AWG, RW90 + BND RUN IN CONDUIT FROM THE LIGHTING IN THE RDT ROOM AND RDT PUMP ROOM, TO THE CONTROL JBA-D711 LOCATED IN ELECTRICAL ROOM B D-105. EXISTING LIGHTING LAYOUT IS SHOWN ON DRAWING SEP-461.

### LEGEND:

- TERMINAL LOCATED IN CONTROL PANEL CP-D826
- TERMINAL LOCATED IN LIGHTING JUNCTION BOX JBA-D711
- 1P — FUSE
- R — CONTROL RELAY COIL
- N.C. CONTACT
- 3-WAY LINE VOLTAGE SWITCH
- SINGLE POLE, LINE VOLTAGE SWITCH
- PLC INPUT

| REFERENCE DRAWINGS | DESCRIPTION |
|---|---|
| SEP-461 | REACTOR & SLUDGE THICKENING, LIGHTING AND RECEPTACLES |
| 1-0102-ECBD-D004 | CABINET LAYOUT, JBA-D711 |
| 1-0102-ESCH-S002 | PANEL SCHEDULES |

APEGM Certificate of Authorization
SNC-Lavalin Inc.
No. 4489

| NO. | REVISIONS | DATE | DESIGN | CHECK |
|---|---|---|---|---|
| 00 | ISSUED FOR CONSTRUCTION – 976-2016 | 2017/04/05 | SLJ | DEB |

CH2MHILL. SNC·LAVALIN KGS GROUP

| | |
|---|---|
| DESIGNED BY: S. JUGANAS | CHECKED BY: E. RYCZKOWSKI |
| DRAWN BY: S. JUGANAS | APPROVED BY: D. BECKER |
| SCALE: NTS | ISSUED FOR CONSTRUCTION BY: J. SHUMKA |
| DATE: 2016/10/04 | DATE: 2017/04/05 |
| CONSULTANT NO.: 474248 | |

ENGINEER'S SEAL
PROVINCE OF MANITOBA
D.E. BECKER
Member 23646
REGISTERED PROFESSIONAL ENGINEER
Apr. 15 2017

Winnipeg
THE CITY OF WINNIPEG
WATER AND WASTE DEPARTMENT

SOUTH END WATER POLLUTION CONTROL CENTRE
SEWPCC UPGRADING/EXPANSION PROJECT
ELECTRICAL – LIGHTING CONTROL
FERMENTERS / THICKENERS
JBA-D711 SCHEMATIC AND WIRING DIAGRAM

| CITY DRAWING NUMBER | SHEET | REV. | SIZE |
|---|---|---|---|
| 1-0102-ELTG-D003 | 001 | 00 | A1 |

PLOT DATE: Mar 24, 2017 – 2:23pm
FILE NAME: 1-0102-ELTG-D003.dwg
LAST SAVE: 2017/03/24 – 2:23pm
PATH: C:\Users\persm2\DWG\1-0102-ELTG-D003.dwg