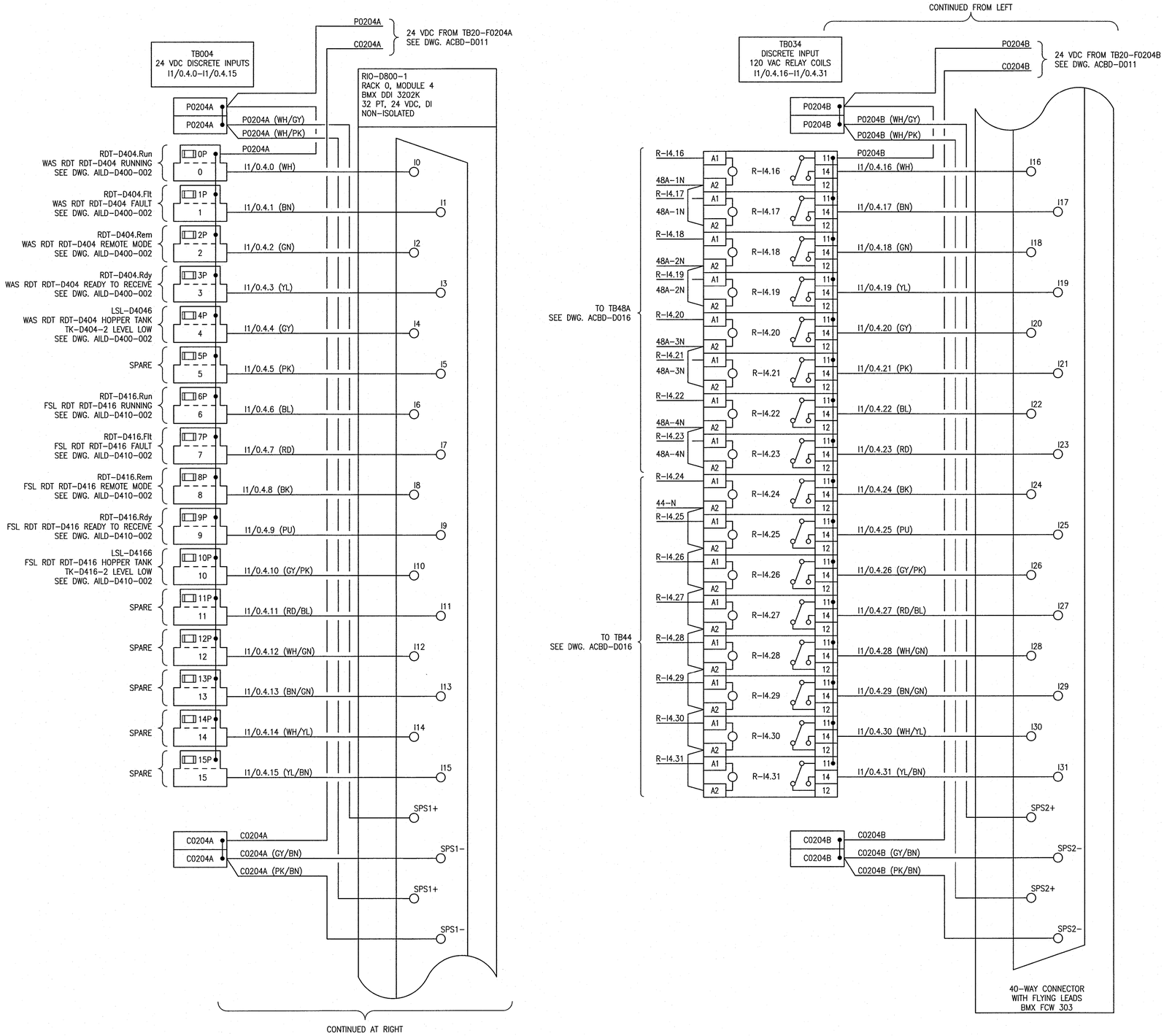


## FUSE SCHEDULE

| TB | IDENTIFIER | SIZE | RATED CURRENT (A) FA |
|---|---|---|---|
| TB004 | 0P | 5x20mm | 0.1 |
| | 1P | 5x20mm | 0.1 |
| | 2P | 5x20mm | 0.1 |
| | 3P | 5x20mm | 0.1 |
| | 4P | 5x20mm | 0.1 |
| | 5P | 5x20mm | 0.1 |
| | 6P | 5x20mm | 0.1 |
| | 7P | 5x20mm | 0.1 |
| | 8P | 5x20mm | 0.1 |
| | 9P | 5x20mm | 0.1 |
| | 10P | 5x20mm | 0.1 |
| | 11P | 5x20mm | 0.1 |
| | 12P | 5x20mm | 0.1 |
| | 13P | 5x20mm | 0.1 |
| | 14P | 5x20mm | 0.1 |
| | 15P | 5x20mm | 0.1 |

| REFERENCE DRAWINGS | DESCRIPTION |
|---|---|
| – | – |

APEGM Certificate of Authorization
SNC-Lavalin Inc.
No. 4489

| NO. | REVISIONS | DATE | DESIGN | CHECK |
|---|---|---|---|---|
| 00 | ISSUED FOR CONSTRUCTION – 976–2016 | 2017/04/05 | MW | PC |

CH2MHILL. SNC·LAVALIN KGS GROUP

| | |
|---|---|
| DESIGNED BY: M. WANG | CHECKED BY: P. CHICATUN |
| DRAWN BY: M. WANG | APPROVED BY: E. RYCZKOWSKI |
| SCALE: NTS | ISSUED FOR CONSTRUCTION BY: J. SHUMKA |
| DATE: 2016/12/13 | DATE: 2017/04/05 |
| CONSULTANT NO.: 474248 | |

ENGINEER'S SEAL
PROVINCE OF MANITOBA
CHICATUN Member 30307
REGISTERED PROFESSIONAL ENGINEER
APRIL 4, 2017
REV. 00

Winnipeg
THE CITY OF WINNIPEG
WATER AND WASTE DEPARTMENT

SOUTH END WATER POLLUTION CONTROL CENTRE
SEWPCC UPGRADING/EXPANSION PROJECT
AUTOMATION – WIRING DIAGRAM
FERMENTERS/THICKENERS/BIOFILTERS
CP–D821, RIO–D800–1 – DISCRETE INPUT

| CITY DRAWING NUMBER | SHEET | REV. | SIZE |
|---|---|---|---|
| 1–0102–ACBD–D012 | 004 | 00 | A1 |

A1 SIZE – 594mm x 841mm

LAST SAVE: 2017/04/01 – 10:12am
PATH: C:\pw_workdir\ch2mhill_wbg\sh043264\d0356273\1–0102–ACBD–D012–004.dwg

PLOT DATE: Apr 01, 2017 – 10:12am
FILE NAME:1–0102–ACBD–D012–004.dwg