A1 SIZE – 594mm x 841mm

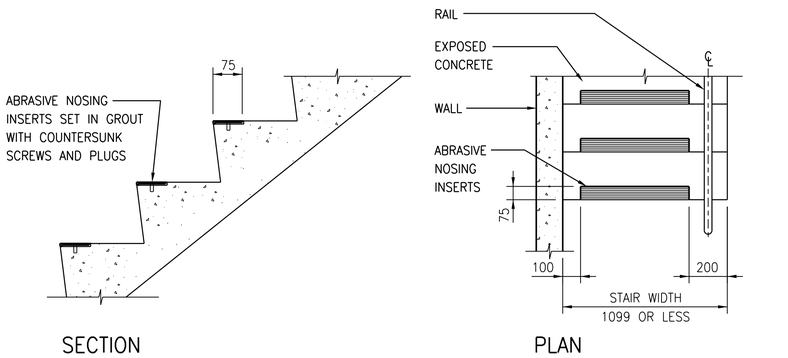

1 ABRASIVE NOSING INSERTS EXPOSED CONCRETE STAIR
NTS

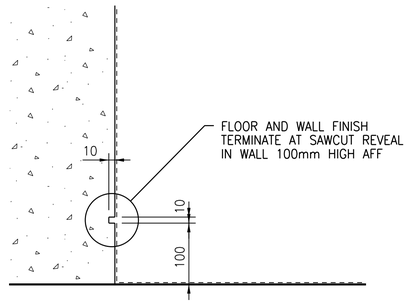

2 BASE REVEAL DETAIL
NTS

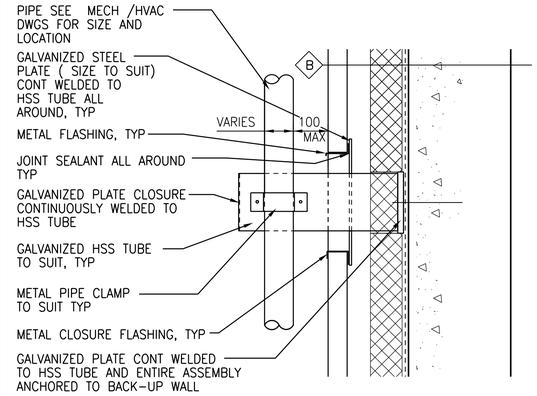

3 SECTION DETAIL PIPE SUPPORT/ METAL WALL PANEL
1:8

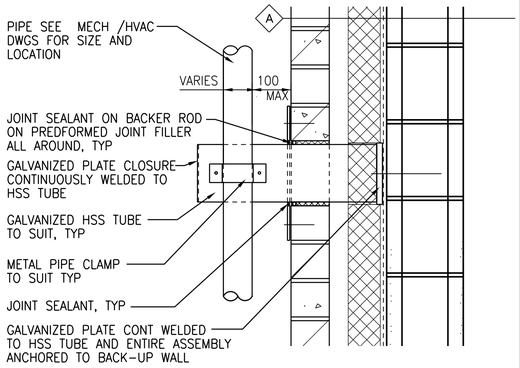

4 SECTION DETAIL PIPE SUPPORT/STONE VENEER
1:8

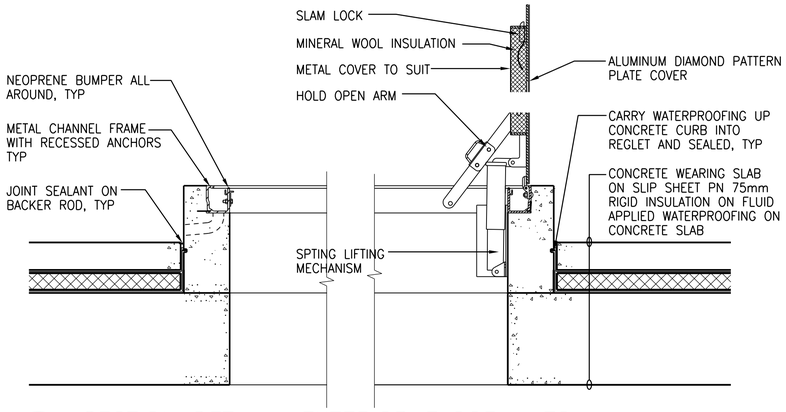

5 SECTION DETAIL– EXTERIOR FLOOR HATCH
1:10

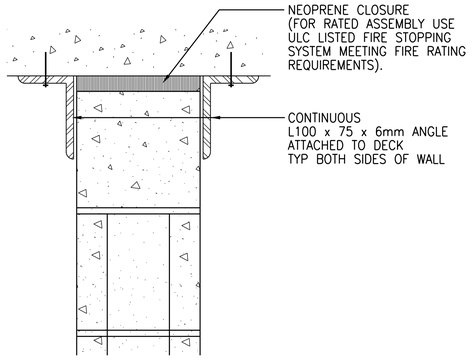

6 SECTION DETAIL AT TOP OF CMU WALL
1:10

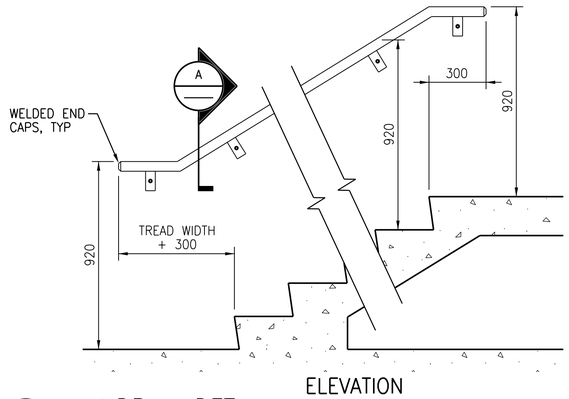

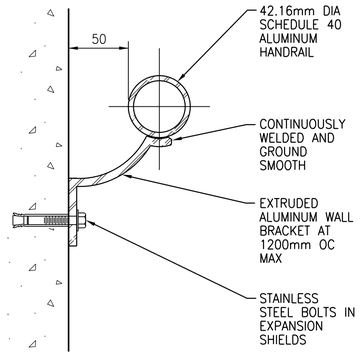

7 HANDRAIL DETAIL
NTS

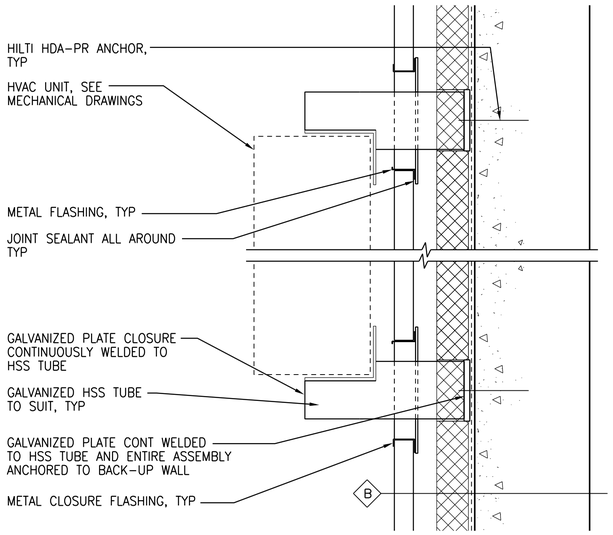

8 SECTION DETAIL HVAC UNIT SUPPORT/ METAL WALL PANEL
NTS

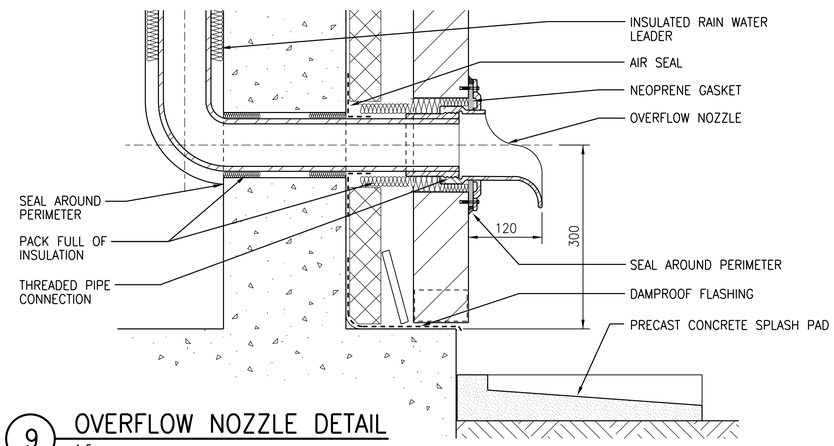

9 OVERFLOW NOZZLE DETAIL
1:5

APEGM
Certificate of Authorization
CH2M HILL Canada Ltd.
No. 1441

NO.	REVISIONS	DATE	DESIGN	CHECK
00	ISSUED FOR CONSTRUCTION – 976–2016	2017/04/05	R.B.	J.C.

CH2MHILL CANADA Architects Inc.
SNC·LAVALIN KGS GROUP

DESIGNED BY: R. ZAKKO	CHECKED BY: B. KOLIS–HUPA
DRAWN BY: R. BATHAN	APPROVED BY: H.T. FREIHAMMER
SCALE: AS SHOWN	ISSUED FOR CONSTRUCTION BY: J. SHUMKA
DATE: 2017/04/05	DATE: 2017/04/05
CONSULTANT NO.: 474248	

ENGINEER'S SEAL
PROVINCE OF MANITOBA
REID ZAKKO
24-05-2017
REGISTERED ARCHITECT

Winnipeg
THE CITY OF WINNIPEG
WATER AND WASTE DEPARTMENT

SOUTH END WATER POLLUTION CONTROL CENTRE
SEWPCC UPGRADING/EXPANSION PROJECT
BUILDING

STANDARD DETAILS (3)

CITY DRAWING NUMBER	SHEET	REV.	SIZE
1–0102–BDTL–A005		00	A1

PLOT DATE: 2017\03\29
FILE NAME:

©CH2M HILL 2017. ALL RIGHTS RESERVED.