A1 SIZE - 594mm x 841mm

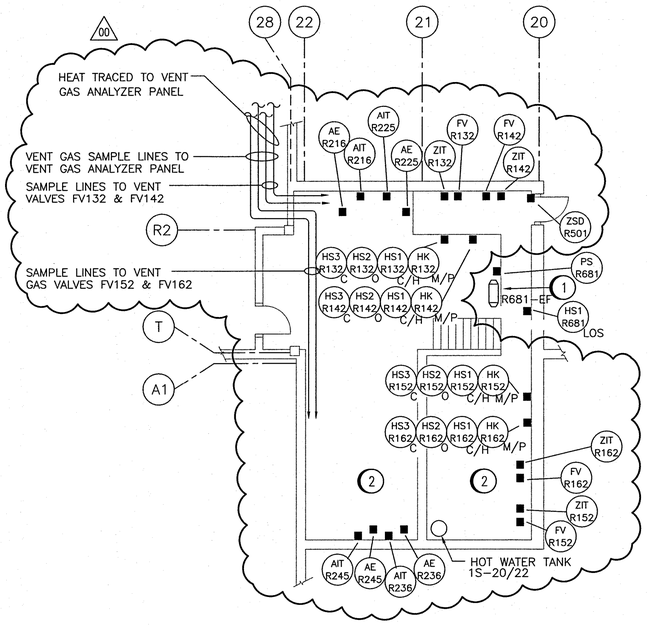

JUNCTION CHAMBER

1 : 100

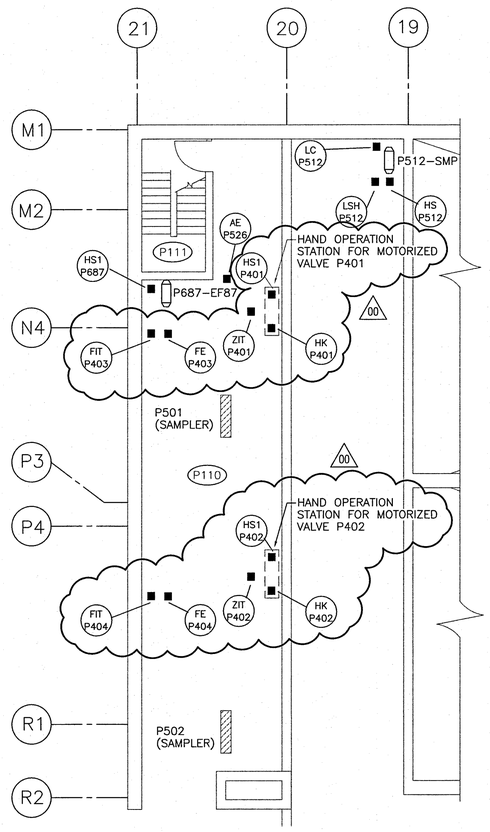

PRIMARY CLARIFIERS 1 & 2 ELEVATION 228.6 M

1 : 100

GENERAL NOTES:

1. THIS DRAWING IS BASED ON DRAWINGS SEP-378 & SEP-471 AND MAY NOT BE REPRESENTATIVE OF THE ACTUAL INSTALLATION.
2. EXISTING ROOM DESIGNATIONS ARE SHOWN ON THE DEMOLITION DRAWINGS.

SPECIFIC NOTES:

1. JUNCTION CHAMBER EXHAUST FAN TO REMAIN.
2. THE E.C TO PARTIALLY REMOVE LUMINAIRES AND ADJUST ASSOCIATED CONTROLS TO SUIT THE NEW ELECTRICAL ROOM B LAYOUT. REFER TO SEP-461 FOR ADDITIONAL DETAILS. CONFIRM LUMINAIRES AND CONTROLS ON SITE.

DEMOLITION NOTES:

1. REMOVE ALL CLOUDED ELECTRICAL AND AUTOMATION EQUIPMENT (EXCEPT AS NOTED), INCLUDING WIRING AND CONDUIT AND SUPPORT SYSTEMS ASSOCIATED WITH EQUIPMENT TO BE REMOVED. COMPLETELY REMOVE WIRING BACK TO SOURCE. COORDINATE WITH OTHER DISCIPLINES AS REQUIRED. OBTAIN APPROVAL FROM THE CONTRACT ADMINISTRATOR PRIOR TO BEGINNING ANY REMOVAL WORK.
2. REVIEW WITH CONTRACT ADMINISTRATOR THE EXTENT OF THE REMOVED EQUIPMENT THE CITY WOULD LIKE TO KEEP AS SPARE. TURN OVER THIS EQUIPMENT TO THE CITY AND SCRAP THE REMAINDER.
3. ALL LIGHTING FIXTURES TO REMAIN UNLESS NOTED OTHERWISE. SEE DRAWING SEP-461 FOR LIGHTING LAYOUT.

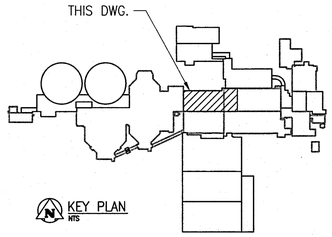

KEY PLAN
NTS

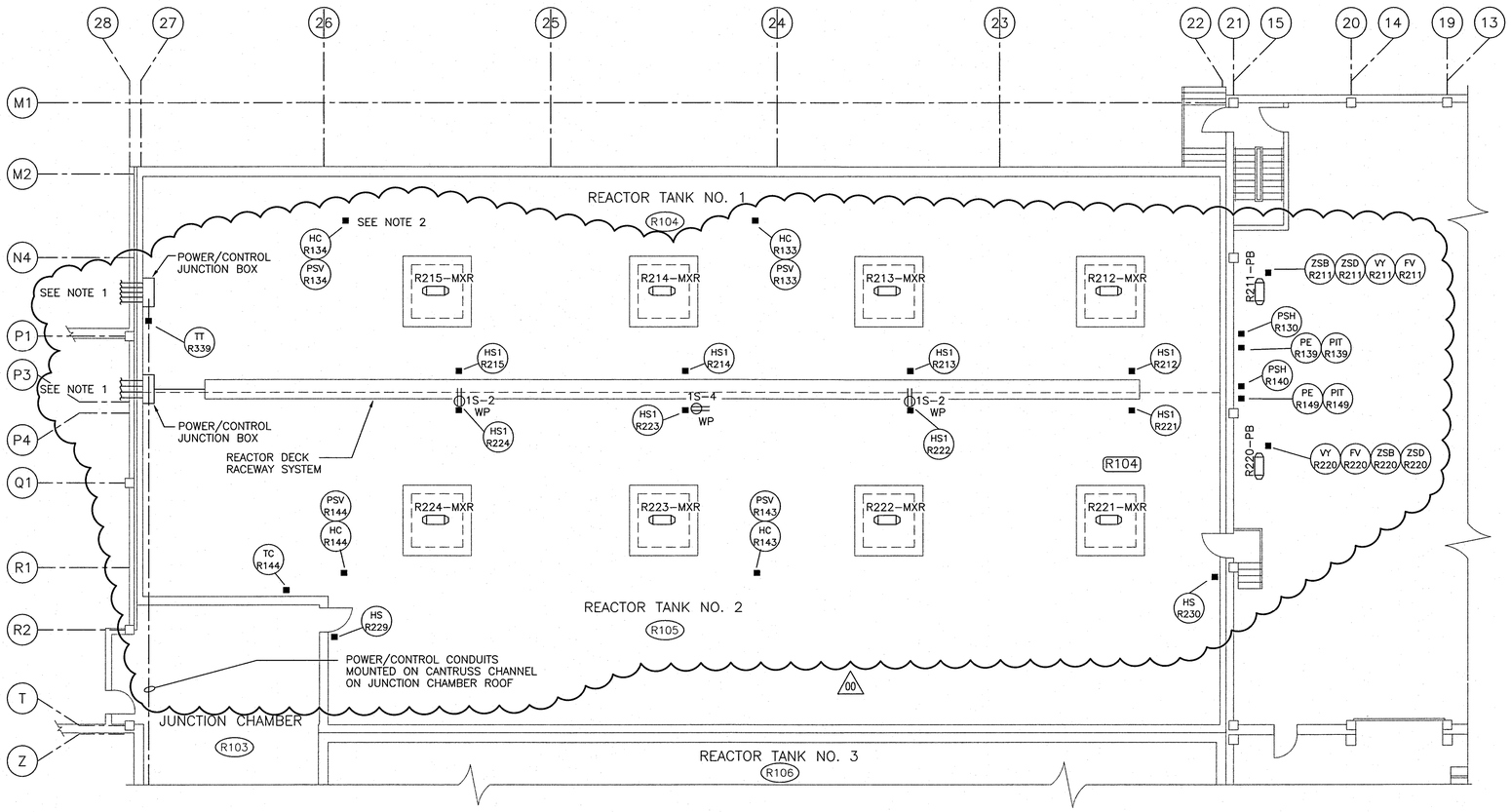

ELEVATION 234.95 M

1 : 125

1:100 1000 0 2000 4000

1:125 1250 0 2500 5000

APEGM Certificate of Authorization
SNC-Lavalin Inc.
No. 4489

NO.	REVISIONS	DATE	DESIGN	CHECK
00	ISSUED FOR CONSTRUCTION - 976-2016	2017/04/05	WE	TMC

REFERENCE DRAWINGS	DESCRIPTION
--	--

CH2MHILL. SNC·LAVALIN KGS GROUP

DESIGNED BY: T. CHURCH
CHECKED BY: E. RYCZKOWSKI
DRAWN BY: MJ. PERSSON
APPROVED BY: D. BECKER
SCALE: AS SHOWN
ISSUED FOR CONSTRUCTION BY: J. SHUMKA
DATE: 2016/06/16
DATE: 2017/04/05
CONSULTANT NO.: 474248

ENGINEER'S SEAL: PROVINCE OF MANITOBA, T.M. CHURCH, Member 32682, REGISTERED PROFESSIONAL ENGINEER, Apr. 4, 2017

Winnipeg — THE CITY OF WINNIPEG
WATER AND WASTE DEPARTMENT

SOUTH END WATER POLLUTION CONTROL CENTRE
SEWPCC UPGRADING/EXPANSION PROJECT
ELECTRICAL
DEMOLITION PLAN
FERMENTERS/THICKENERS

CITY DRAWING NUMBER	SHEET	REV.	SIZE
1-0102-EGAD-DD01	002	00	A1

PLOT DATE: Mar 31, 2017 - 4:25pm
FILE NAME: 1-0102-EGAD-DD01-002.dwg

LAST SAVE: 2017/03/31 - 4:25pm
PATH: C:\pw_workdir\ch2mhill_wbg\ve006717\d0356133\1-0102-EGAD-DD01-002.dwg