A1 SIZE – 594mm x 841mm

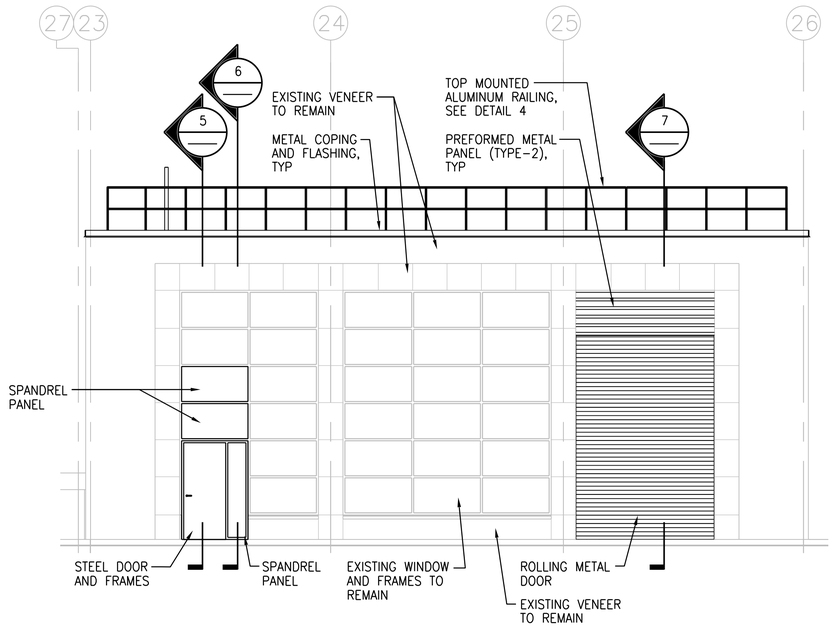

1 NORTH ELEVATION
1:75
BGAD-D002

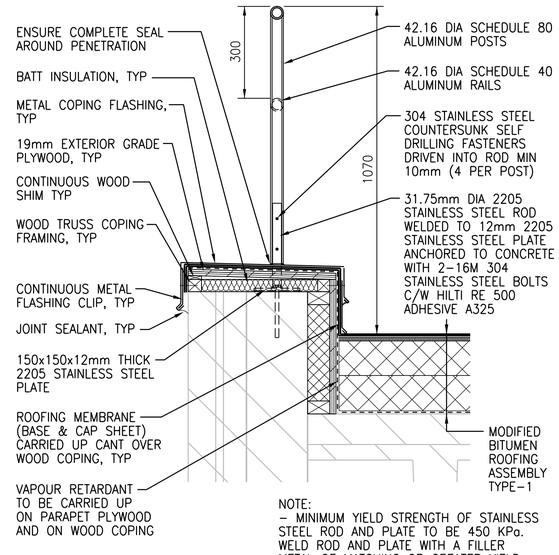

NOTE:
- MINIMUM YIELD STRENGTH OF STAINLESS STEEL ROD AND PLATE TO BE 450 KPa. WELD ROD AND PLATE WITH A FILLER METAL OF MATCHING OR GREATER YIELD STRENGTH.
- ANCHOR EXISTING MASONRY PARAPET TO DOUBLE TEE AND MASONRY BELOW WITH 10M x 700LG ADHESIVE DOWELS.

4 WALL SECTION
1:10

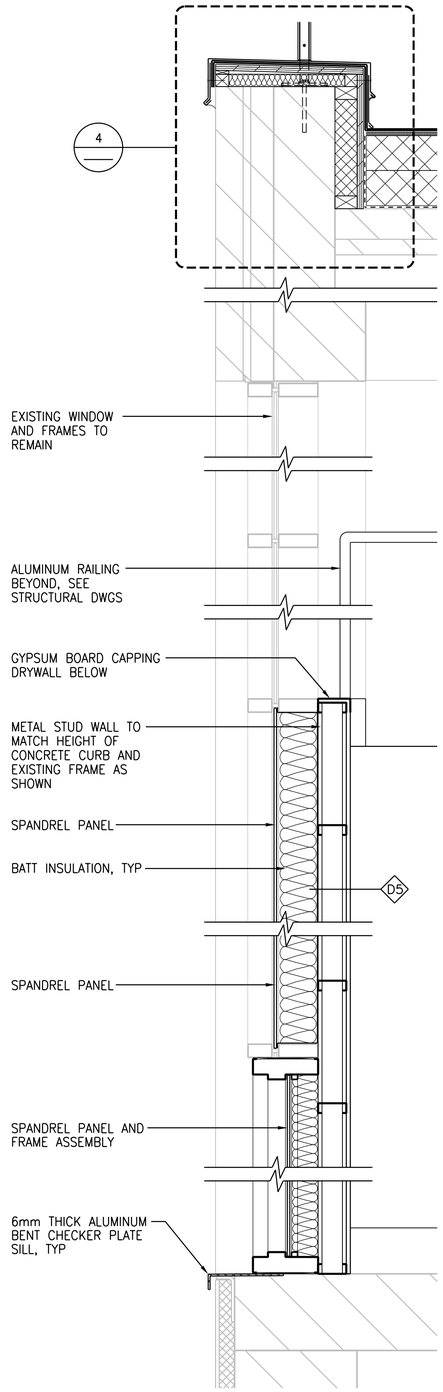

6 WALL SECTION
1:10

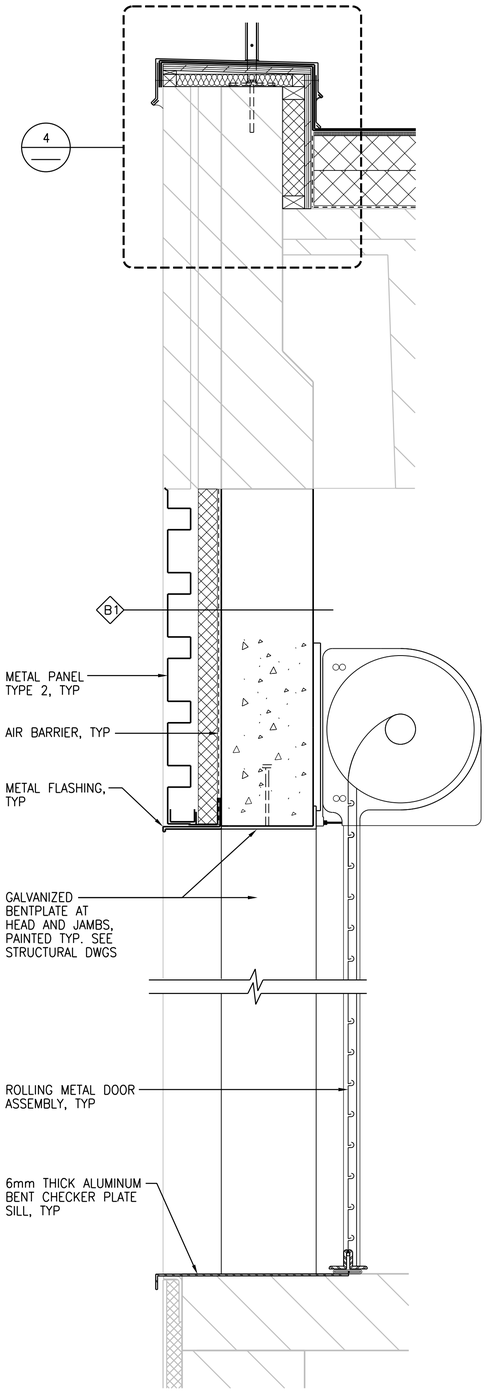

7 WALL SECTION
1:10

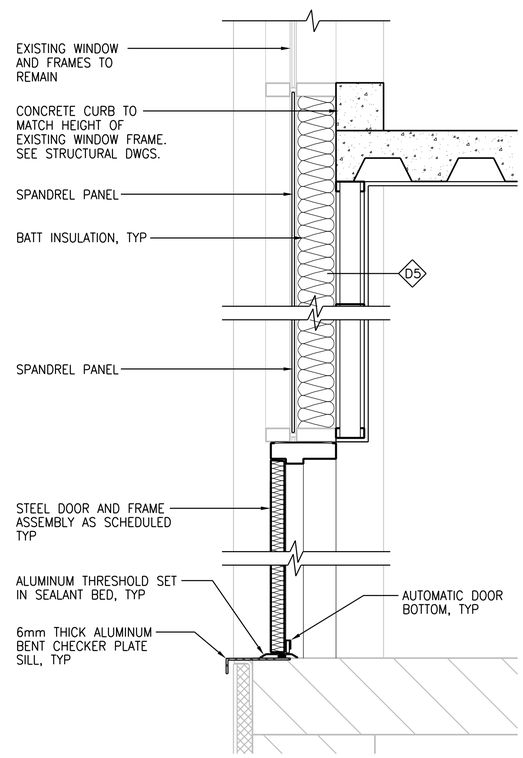

5 WALL SECTION
1:10

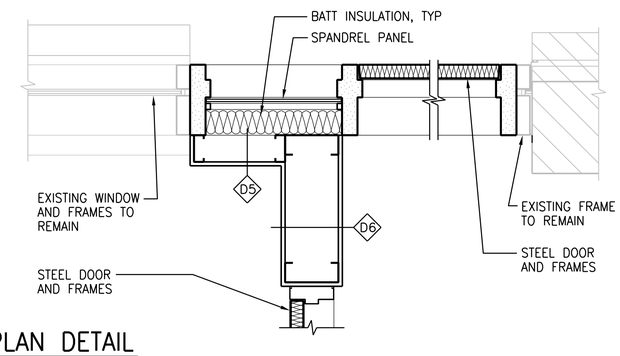

2 PLAN DETAIL
1:10
BGAD-D002

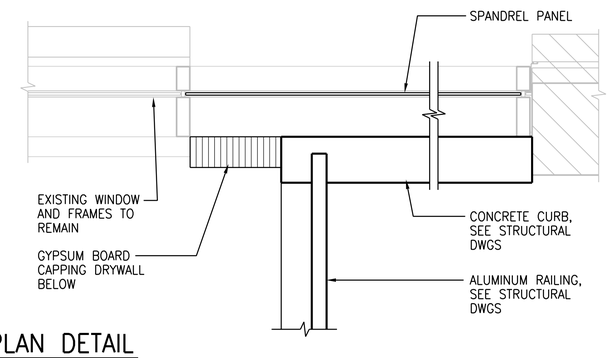

3 PLAN DETAIL
1:10
BGAD-D002

APEGM
Certificate of Authorization
CH2M HILL Canada Ltd.
No. 1441

NO.	REVISIONS	DATE	DESIGN	CHECK
00	ISSUED FOR CONSTRUCTION - 976-2016	2017/04/05	R.B.	J.C.

CH2MHILL CANADA Architects Inc.
SNC·LAVALIN KGS GROUP CONSULTING ENGINEERS

DESIGNED BY: R. ZAKKO	CHECKED BY: W. YU
DRAWN BY: R. BATHAN	APPROVED BY: H.T. FRIEHAMMER
SCALE: 1:50	ISSUED FOR CONSTRUCTION BY: J. SHUMKA
DATE: 2017/04/05	DATE: 2017/04/05
CONSULTANT NO.: 474248	

ENGINEER'S SEAL
PROVINCE OF MANITOBA
REID ZAKKO
24-05-2017
REGISTERED ARCHITECT

Winnipeg
THE CITY OF WINNIPEG
WATER AND WASTE DEPARTMENT

SOUTH END WATER POLLUTION CONTROL CENTRE
SEWPCC UPGRADING/EXPANSION PROJECT
BUILDING
THICKENERS
DETAILS 1 OF 2

CITY DRAWING NUMBER	SHEET	REV.	SIZE
1-0102-BDTL-D002	001	00	A1

PLOT DATE: 2017\03\30
FILE NAME: 1-0102-BDTL-D002.dgn

©CH2M HILL 2017. ALL RIGHTS RESERVED.