A1 SIZE – 594mm x 841mm

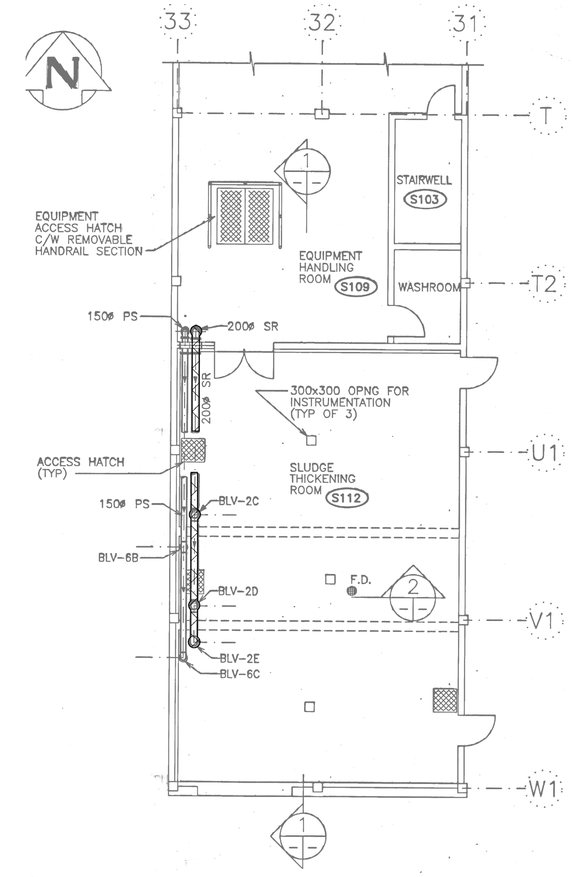

PART PLAN ABOVE EL 233.477m
SCALE 1:100

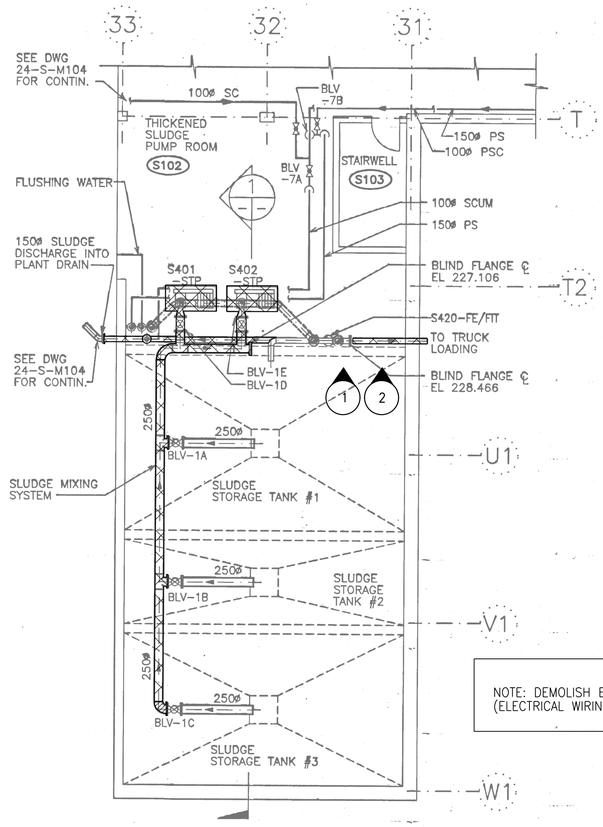

PART PLAN ABOVE EL 226.466m
SCALE 1:100

NOTE: DEMOLISH EXISTING PIPING AND EQUIPMENT (ELECTRICAL WIRING)AS INDICATED AND REPLACE.

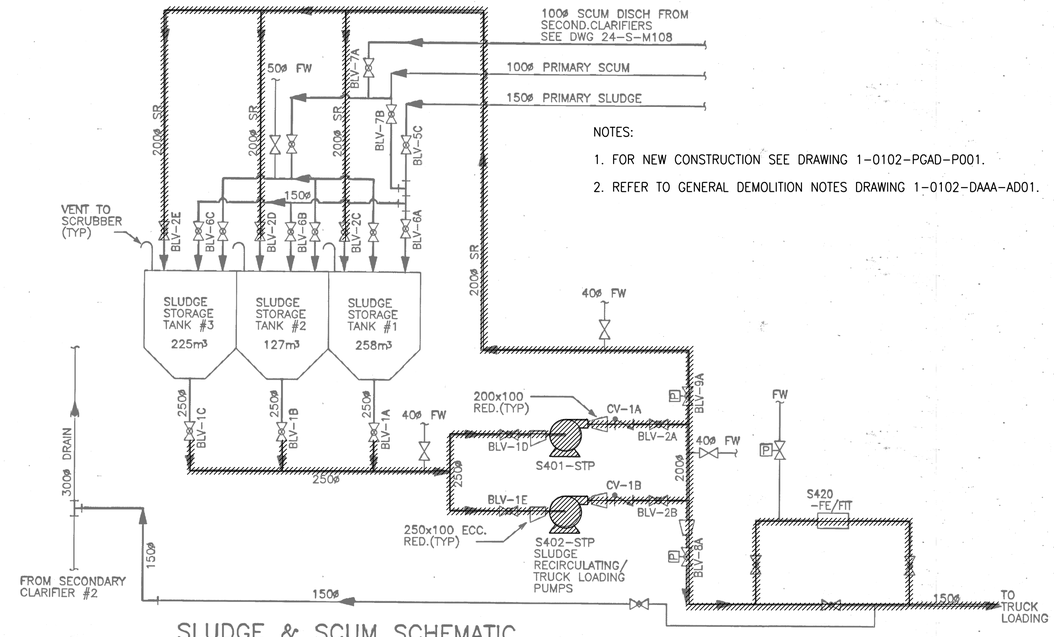

SLUDGE & SCUM SCHEMATIC
NTS

NOTES:

1. FOR NEW CONSTRUCTION SEE DRAWING 1-0102-PGAD-P001.
2. REFER TO GENERAL DEMOLITION NOTES DRAWING 1-0102-DAAA-AD01.

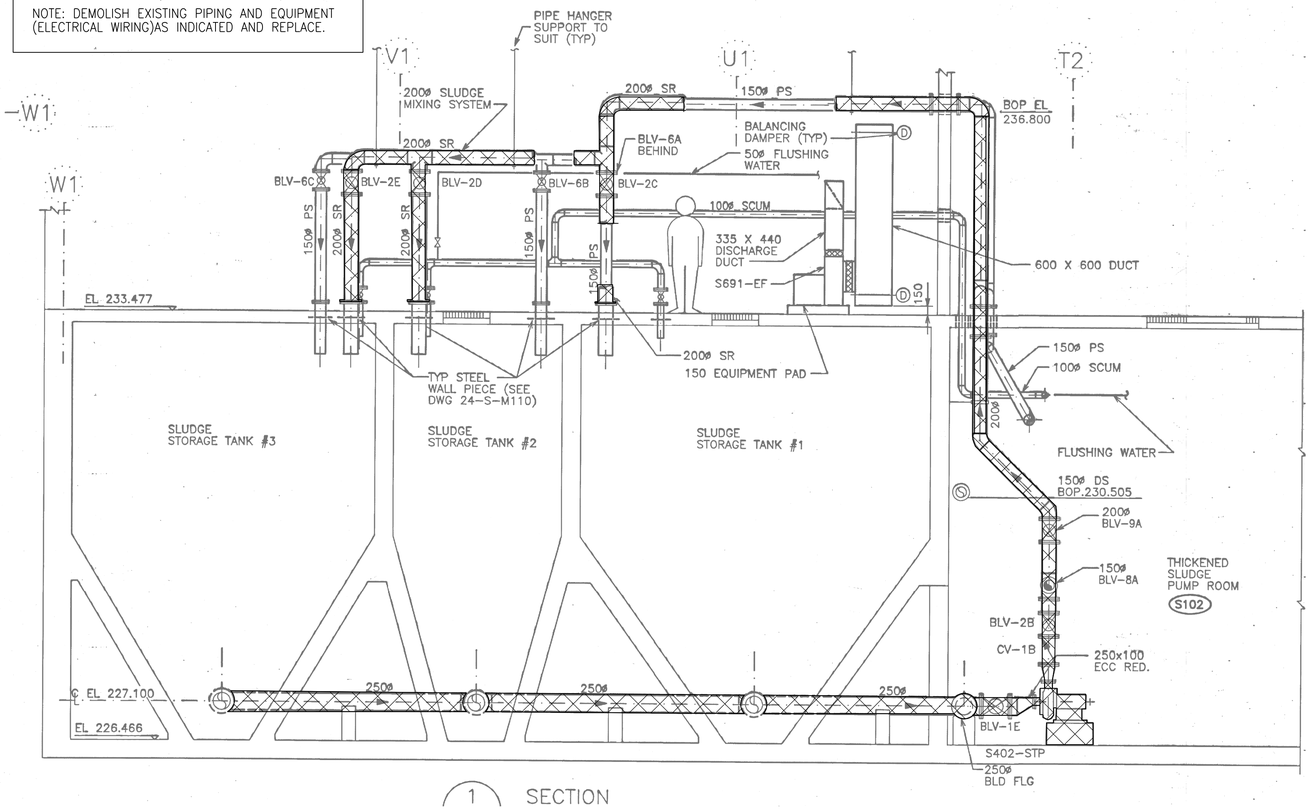

1 SECTION

1 PHOTO 1
NTS

2 PHOTO 2
NTS

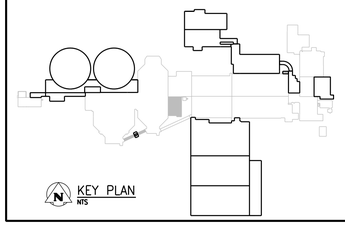

KEY PLAN
NTS

SEALING ARCHITECT OR ENGINEER ACCEPTS RESPONSIBILITY ONLY FOR AREAS IDENTIFIED BY CLOUDING ON THIS DRAWING.

NOTE: THIS DRAWING SUPERSEDES DRAWING SEP-433

APEGM
Certificate of Authorization
CH2M HILL Canada Ltd.
No. 1441

NO.	REVISIONS	DATE	DESIGN	CHECK
00	ISSUED FOR CONSTRUCTION - 976-2016	2017/04/05	B.C.	J.C.

CH2MHILL. SNC·LAVALIN KGS GROUP

DESIGNED BY: F. ABSI	CHECKED BY: B. EDGAR
DRAWN BY: B. COOPER	APPROVED BY: H.T. FREIHAMMER
SCALE: NTS	ISSUED FOR CONSTRUCTION
DATE: 2017/04/05	BY: J. SHUMKA DATE: 2017/04/05
CONSULTANT NO.: 474248	

ENGINEER'S SEAL
PROVINCE OF MANITOBA
April 5, 2017
F. J. ABSI
Member 36075
REGISTERED PROFESSIONAL ENGINEER
F. J. Absi

Winnipeg
THE CITY OF WINNIPEG
WATER AND WASTE DEPARTMENT

SOUTH END WATER POLLUTION CONTROL PLANT
SEWPCC UPGRADING/EXPANSION PROJECT
PROCESS
PRIMARY CLARIFIERS
SLUDGE HOLDING TANK PIPE MODIFICATIONS

CITY DRAWING NUMBER	SHEET	REV.	SIZE
1-0102-PGAD-DD51		00	A1

PLOT DATE: 2017\04\02
FILE NAME: 1-0102-PGAD-DD51.dgn

©CH2M HILL 2017. ALL RIGHTS RESERVED.