A1 SIZE – 594mm x 841mm

## ELEMENTARY DIAGRAM:

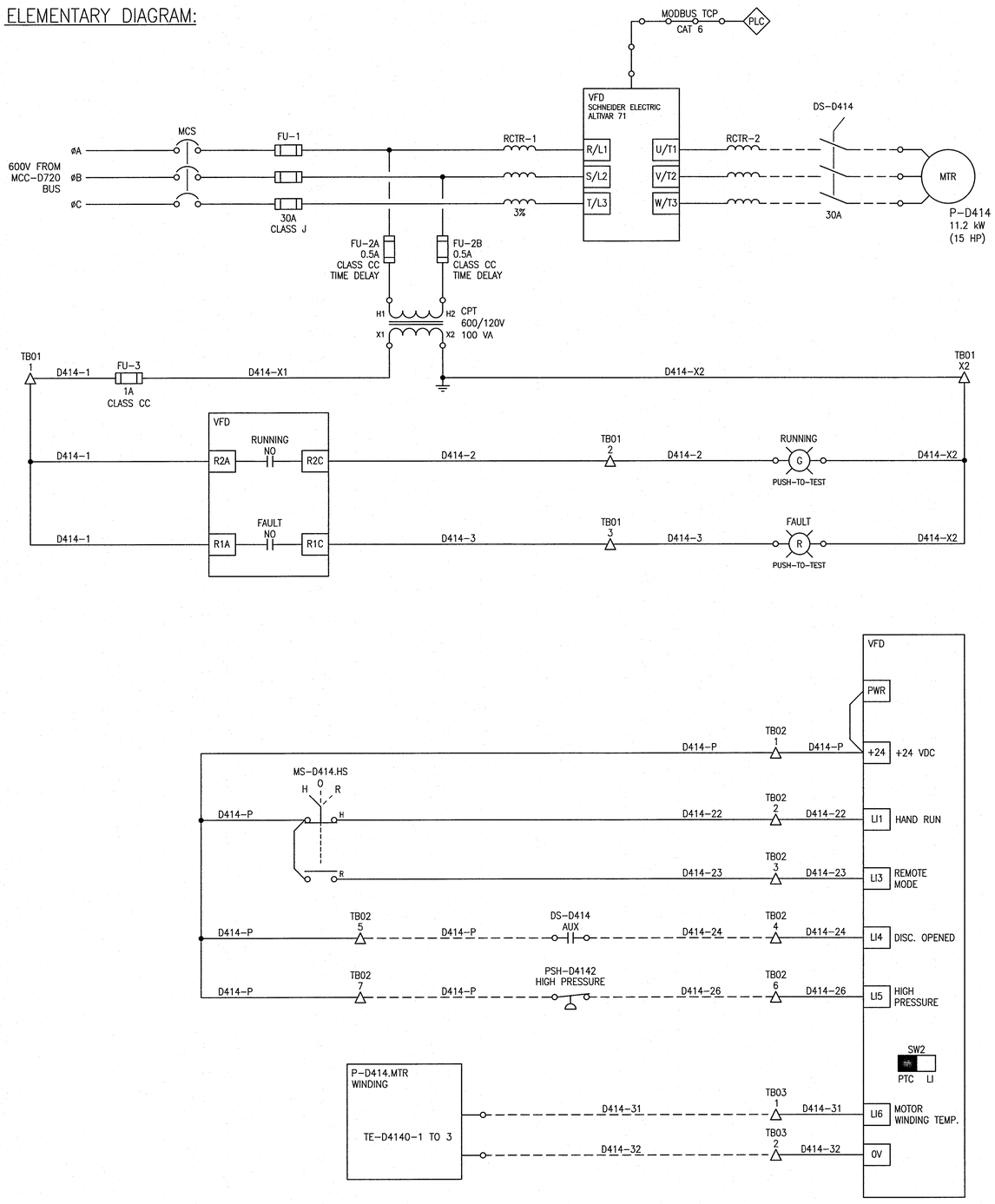


## FIELD CONNECTION DIAGRAM:

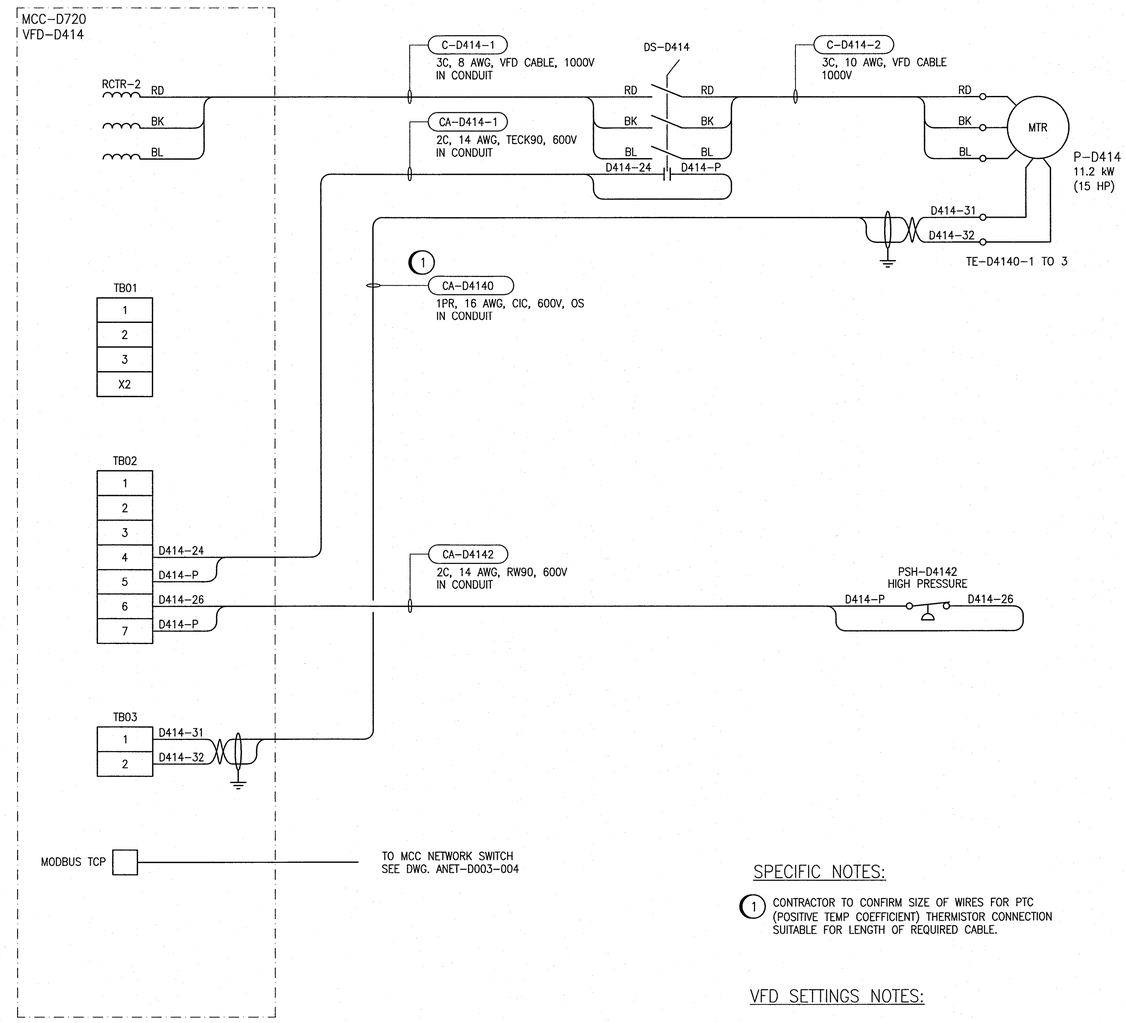


## SPECIFIC NOTES:

1. CONTRACTOR TO CONFIRM SIZE OF WIRES FOR PTC (POSITIVE TEMP COEFFICIENT) THERMISTOR CONNECTION SUITABLE FOR LENGTH OF REQUIRED CABLE.

## VFD SETTINGS NOTES:

1. IN HAND MODE, THE VFD TO OPERATE AT RATED SPEED.
2. "DISCONNECT OPENED" IS TO ISSUE STOP COMMAND TO THE VFD.
3. PRESSURE SWITCH PSH-D4142 IS TO GENERATE HIGH PRESSURE FAULT SIGNAL.

## LEGEND:

△ MCC TERMINAL

⊠ ADP-D830 TERMINAL

| REFERENCE DRAWINGS | DESCRIPTION |
|---|---|
| | |

APEGM Certificate of Authorization
SNC-Lavalin Inc.
No. 4489

| NO. | REVISIONS | DATE | DESIGN | CHECK |
|---|---|---|---|---|
| 00 | ISSUED FOR CONSTRUCTION – 976-2016 | 2017/04/05 | SSB | TMC |

CH2MHILL. SNC-LAVALIN KGS GROUP

| | |
|---|---|
| DESIGNED BY: S. BOGHOSIAN | CHECKED BY: T. CHURCH |
| DRAWN BY: G. WILLIAMSON | APPROVED BY: E. RYCZKOWSKI |
| SCALE: NTS | ISSUED FOR CONSTRUCTION BY: J. SHUMKA |
| DATE: 2016/11/30 | DATE: 2017/04/05 |
| CONSULTANT NO.: 474248 | |

ENGINEER'S SEAL
PROVINCE OF MANITOBA
T. M. CHURCH
Member
32682
REGISTERED PROFESSIONAL ENGINEER
Apr. 4, 2017

Winnipeg
THE CITY OF WINNIPEG
WATER AND WASTE DEPARTMENT

SOUTH END WATER POLLUTION CONTROL CENTRE
SEWPCC UPGRADING/EXPANSION PROJECT
ELECTRICAL – MOTOR STARTER SCHEMATIC
FERMENTERS/THICKENERS
P-D414 FSL RDT FEED PUMP

| CITY DRAWING NUMBER | SHEET | REV. | SIZE |
|---|---|---|---|
| 1-0102-EMCL-D414 | 001 | 00 | A1 |

PLOT DATE: Mar 28, 2017 – 11:27am
FILE NAME: 1-0102-EMCL-D414.dwg

LAST SAVE: 2017/03/28 – 11:27am
PATH: C:\pw_workdir\ch2mhill_wbg\sh043264\d0416219\1-0102-EMCL-D414.dwg