A1 SIZE – 594mm x 841mm

ELEMENTARY DIAGRAM:

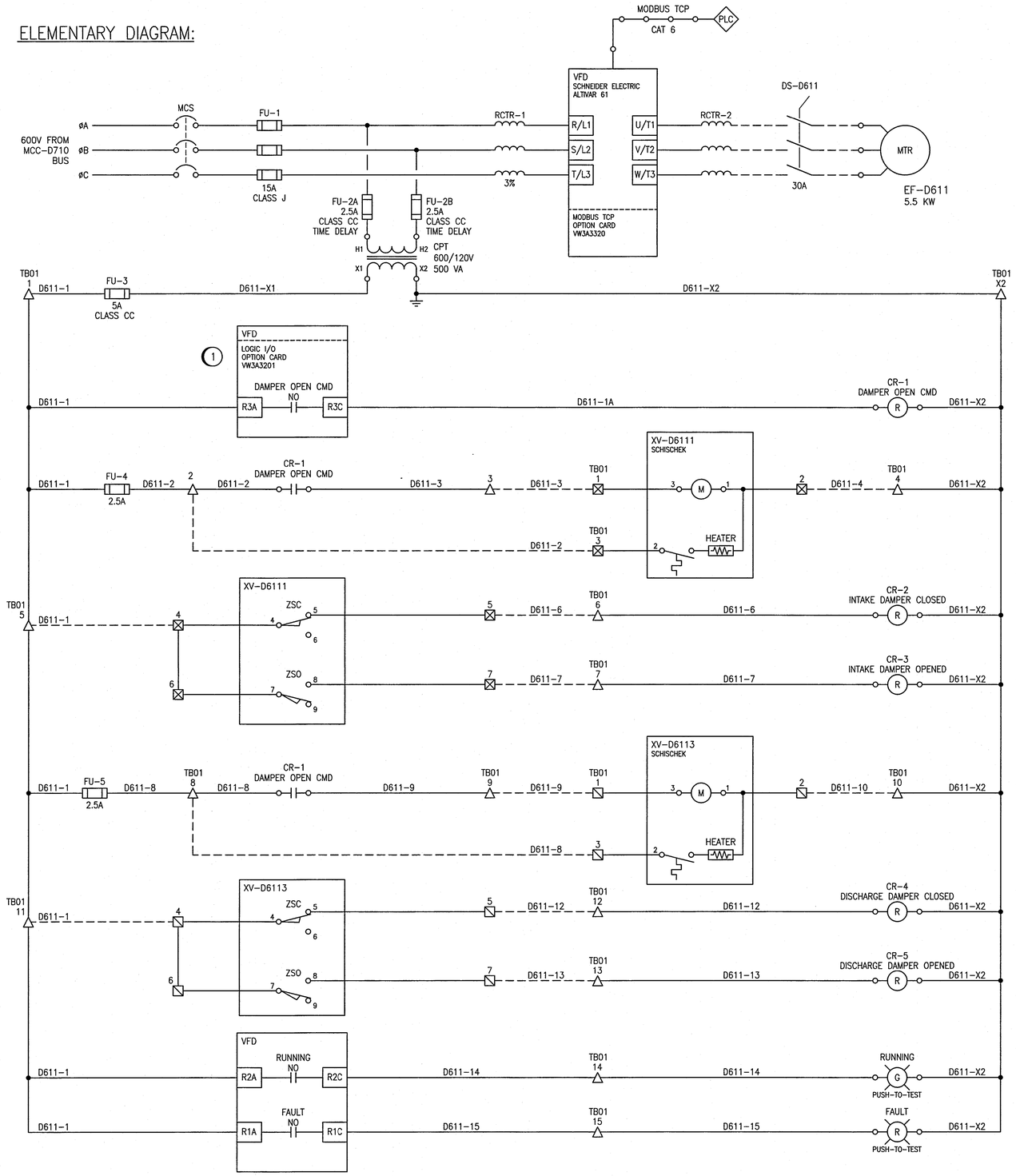

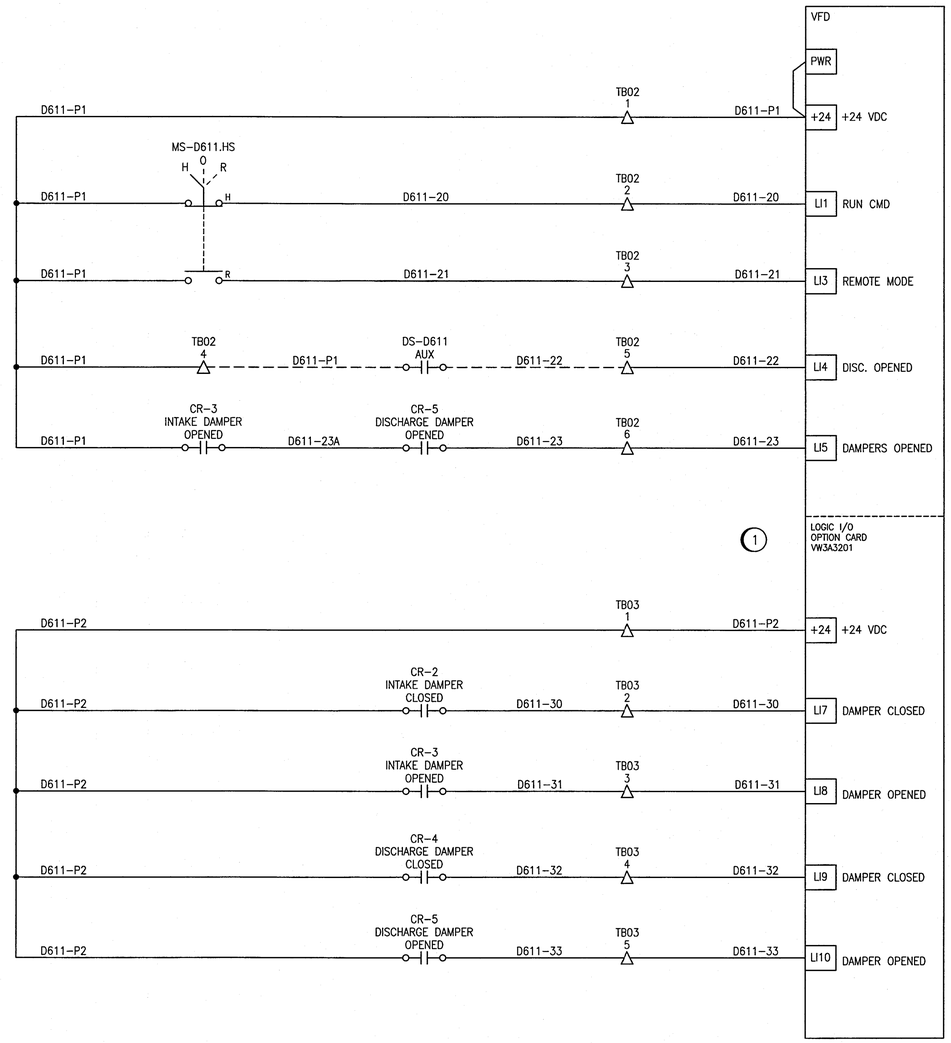

SPECIFIC NOTES

1. PROVIDE LOGIC I/O OPTION CARD FOR ADDITIONAL RELAY CONTACTS.

VFD SETTINGS NOTES

1. IN HAND MODE THE VFD IS TO OPERATE IN HIGH SPEED MODE.
2. OUTPUT RELAY R3 ON VFD LOGIC I/O CARD IS TO CLOSE WHEN VFD RECEIVES A RUN COMMAND. VFD IS TO START AFTER DAMPER CLOSED LIMIT SWITCHES DE-ACTIVATE. SET RAMP UP RATE SLOW ENOUGH TO ALLOW FOR DAMPER OPENING TIME.
3. "DISCONNECT OPENED" IS TO ISSUE A STOP COMMAND TO THE VFD.

LEGEND:

- △ MCC TERMINAL
- ⊠ JBA-D6111 TERMINAL
- ⧅ JBA-D6113 TERMINAL

NOTES

1. DAMPER POSITION SWITCHES SHOWN WITH DAMPER IN CLOSED POSITION.

REFERENCE DRAWINGS	DESCRIPTION
--	--

APEGM Certificate of Authorization
SNC-Lavalin Inc.
No. 4489

NO.	REVISIONS	DATE	DESIGN	CHECK
00	ISSUED FOR CONSTRUCTION – 976-2016	2017/04/05	SSB	TMC

CH2MHILL. SNC·LAVALIN KGS GROUP

DESIGNED BY: S. BOGHOSIAN	CHECKED BY: T. CHURCH
DRAWN BY: G. WILLIAMSON	APPROVED BY: E. RYCZKOWSKI
SCALE: NTS	ISSUED FOR CONSTRUCTION BY: J. SHUMKA
DATE: 2015/02/10	DATE: 2017/04/05
CONSULTANT NO.: 474248	

ENGINEER'S SEAL
PROVINCE OF MANITOBA
T.M. CHURCH
Member 32682
REGISTERED PROFESSIONAL ENGINEER
Apr. 4, 2017

Winnipeg
THE CITY OF WINNIPEG
WATER AND WASTE DEPARTMENT

SOUTH END WATER POLLUTION CONTROL CENTRE
SEWPCC UPGRADING/EXPANSION PROJECT
ELECTRICAL – MOTOR STARTER SCHEMATIC
FERMENTERS/THICKENERS
EF-D611 WAS RDT ROOM EXHAUST FAN

CITY DRAWING NUMBER	SHEET	REV.	SIZE
1-0102-EMCL-D611	001	00	A1

PLOT DATE: Mar 28, 2017 – 11:28am
FILE NAME:1-0102-EMCL-D611-001.dwg

LAST SAVE: 2017/03/28 – 11:28am
PATH: C:\pw_workdir\ch2mhill_wbg\sh043264\d04162119\1-0102-EMCL-D611-001.dwg