A1 SIZE – 594mm x 841mm

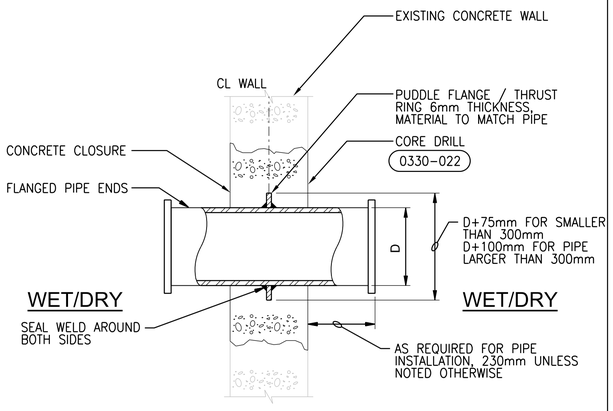

NOTES:

1. ALL DIMENSIONS IN MILLIMETERS, UNLESS OTHERWISE NOTED.
2. PROVIDE WATER TIGHT JOINT AS PERFORMANCE REQUIREMENT.
3. PIPE PENETRATIONS THOUGH EXISTING WALLS AND SLABS, ALSO REFER TO STRUCTURAL DETAIL 0330-022. (1-0102-SDTL-A005)

PIPE PENETRATION THROUGH EXISTING SLAB OR WALL

NTS

4027-605A

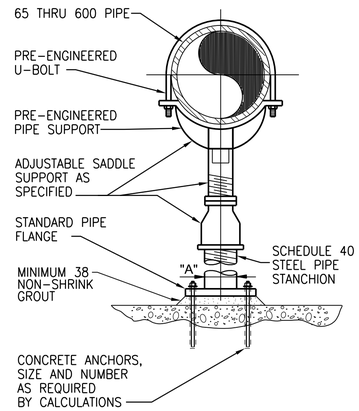

DIMENSION TABLE	
PIPE SIZE	"A" MINIMUM NOMINAL PIPE SIZE
65	65
75	65
100	75
150	75
200	75
250	75
300	75
350	100
400	100
500	150
600	150

NOTE:
SUBMIT FINAL DESIGN AND CALCULATIONS FOR SUPPORT AND ANCHORAGE AS SPECIFIED.

PIPE SUPPORT SADDLE SUPPORT PEDESTAL TYPE AJUSTABLE

NTS

4005-500

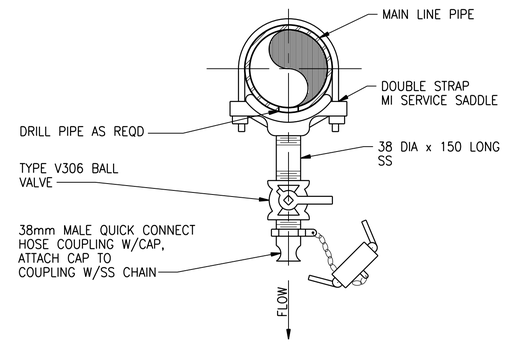

NOTES:
1. FOR LINE SIZE 38mm AND SMALLER, FITTINGS AND VALVES SHALL BE SAME SIZE AS LINE.

LINE DRAIN VALVE INSTALLATION

NTS

4027-191

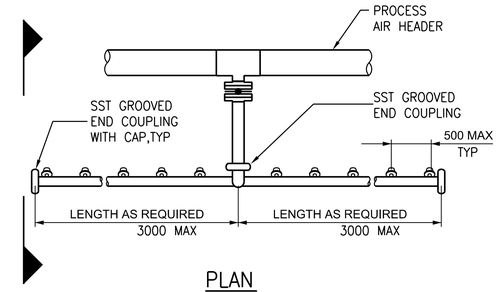

PLAN

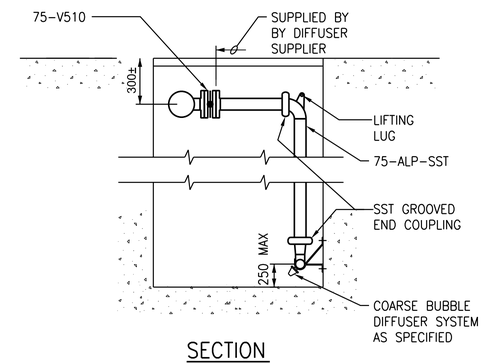

SECTION

CHANNEL AIR DIFFUSER DETAIL

NTS

4027-624

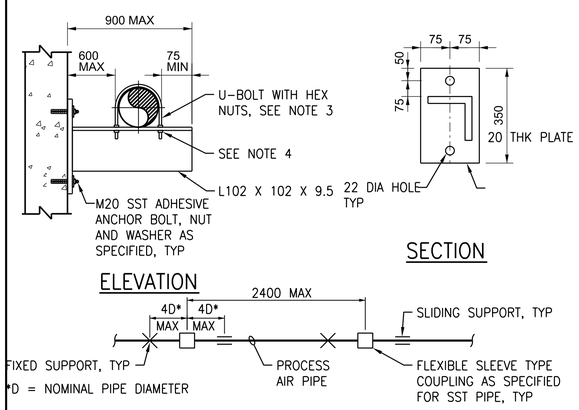

NOTES:

1. ALL MATERIAL TO BE TYPE 316L STAINLESS STEEL.
2. FOR USE WITH PIPE SIZES UP TO 300mm NPS.
3. SLIDING SUPPORT: U-BOLT WITH 3mm GAP AROUND PIPE.
   FIXED SUPPORT: U-BOLT WITH TIGHT FIT AROUND PIPE.
4. SLIDING SUPPORT: NUT TOP AND BOTTOM, TYP
   FIXED SUPPORT: DOUBLE NUT ON BOTTOM, TYP.

PIPE SUPPORTS AND COUPLING FOR ALP PIPING IN CHANNELS

NTS

4027-625

APEGM
Certificate of Authorization
CH2M HILL Canada Ltd.
No. 1441

NO.	REVISIONS	DATE	DESIGN	CHECK
00	ISSUED FOR CONSTRUCTION - 976-2016	2017/04/05	B.C.	J.C.

CH2MHILL. SNC·LAVALIN KGS GROUP

DESIGNED BY: F. ABSI	CHECKED BY: B. EDGAR
DRAWN BY: B. COOPER	APPROVED BY: H.T. FREIHAMMER
SCALE: NTS	ISSUED FOR CONSTRUCTION BY: J. SHUMKA
DATE: 2017/04/05	DATE: 2017/04/05
CONSULTANT NO.: 474248	

ENGINEER'S SEAL
PROVINCE OF MANITOBA
April 5, 2017
F. J. ABSI
Member 36875
REGISTERED PROFESSIONAL ENGINEER
F. J. Absi

Winnipeg
THE CITY OF WINNIPEG
WATER AND WASTE DEPARTMENT

SOUTH END WATER POLLUTION CONTROL CENTRE
SEWPCC UPGRADING/EXPANSION PROJECT
PROCESS
STANDARD DETAILS (5)

CITY DRAWING NUMBER	SHEET	REV.	SIZE
1-0102-PDTL-A006	001	00	A1

PLOT DATE: 2017\03\29
FILE NAME: 1-0102-PDTL-A006.dgn

©CH2M HILL 2017. ALL RIGHTS RESERVED.