A1 SIZE – 594mm x 841mm

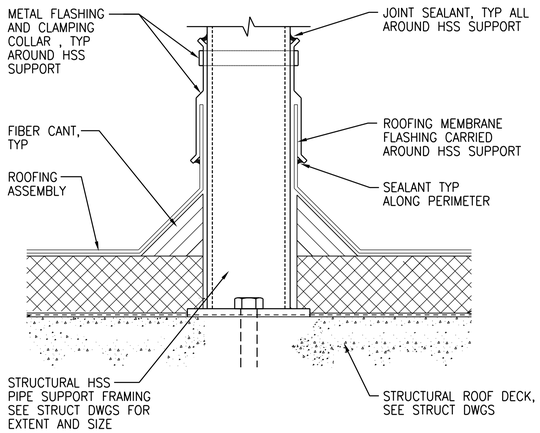

1 ROOF PIPE SUPPORT FRAME
NTS

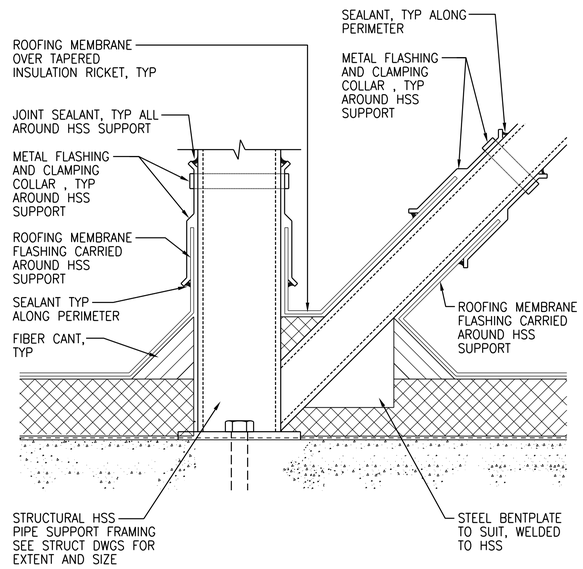

2 ROOF PIPE SUPPORT FRAME
NTS

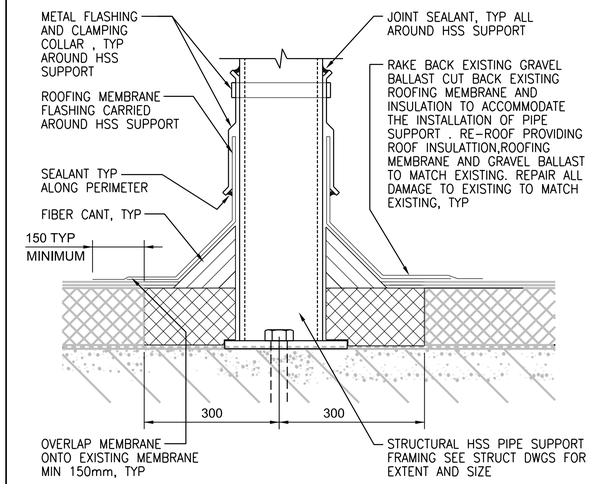

3 ROOF PIPE SUPPORT FRAME (EXISTING ROOF)
NTS

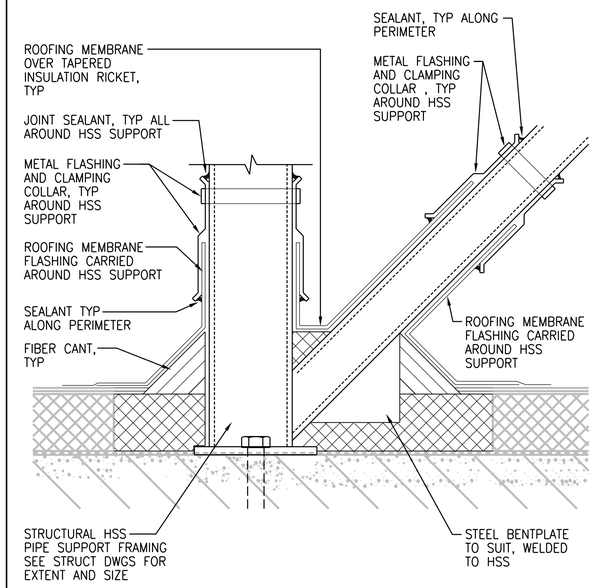

4 ROOF PIPE SUPPORT FRAME (EXISTING ROOF)
NTS

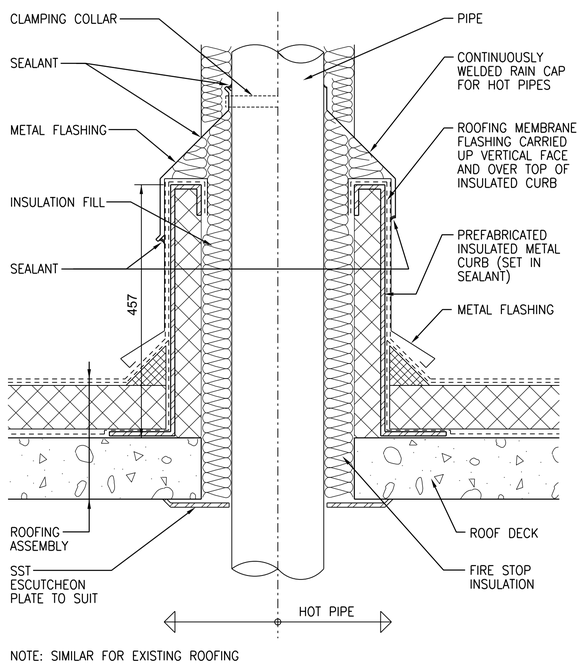

NOTE: SIMILAR FOR EXISTING ROOFING

5 PIPE THRU ROOF (LARGER THAN 200mm DIA)
1:10

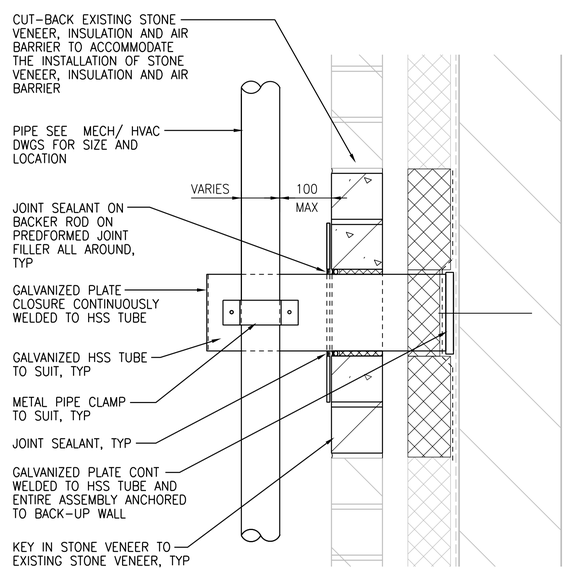

6 PIPE SUPPORT/STONE VENEER (EXISTING EXTERIOR WALL)
1:10

©CH2M HILL 2017. ALL RIGHTS RESERVED.

APEGM
Certificate of Authorization
CH2M HILL Canada Ltd.
No. 1441

NO.	REVISIONS	DATE	DESIGN	CHECK
00	ISSUED FOR CONSTRUCTION – 976-2016	2017/04/05	R.B.	J.C.

CH2MHILL CANADA Architects Inc.
SNC·LAVALIN KGS GROUP

DESIGNED BY: R. ZAKKO	CHECKED BY: B. KOLIS-HUPA
DRAWN BY: R. BATHAN	APPROVED BY: H.T. FREIHAMMER
SCALE: AS SHOWN	ISSUED FOR CONSTRUCTION BY: J. SHUMKA
DATE: 2017/04/05	DATE: 2017/04/05
CONSULTANT NO.: 474248	

ENGINEER'S SEAL
PROVINCE OF MANITOBA
REID ZAKKO
24-05-2017
REGISTERED ARCHITECT

Winnipeg
THE CITY OF WINNIPEG
WATER AND WASTE DEPARTMENT

SOUTH END WATER POLLUTION CONTROL CENTRE
SEWPCC UPGRADING/EXPANSION PROJECT
BUILDING

STANDARD DETAILS (4)

CITY DRAWING NUMBER	SHEET	REV.	SIZE
1-0102-BDTL-A006		00	A1

PLOT DATE: 2017\03\29
FILE NAME: