A1 SIZE – 594mm x 841mm

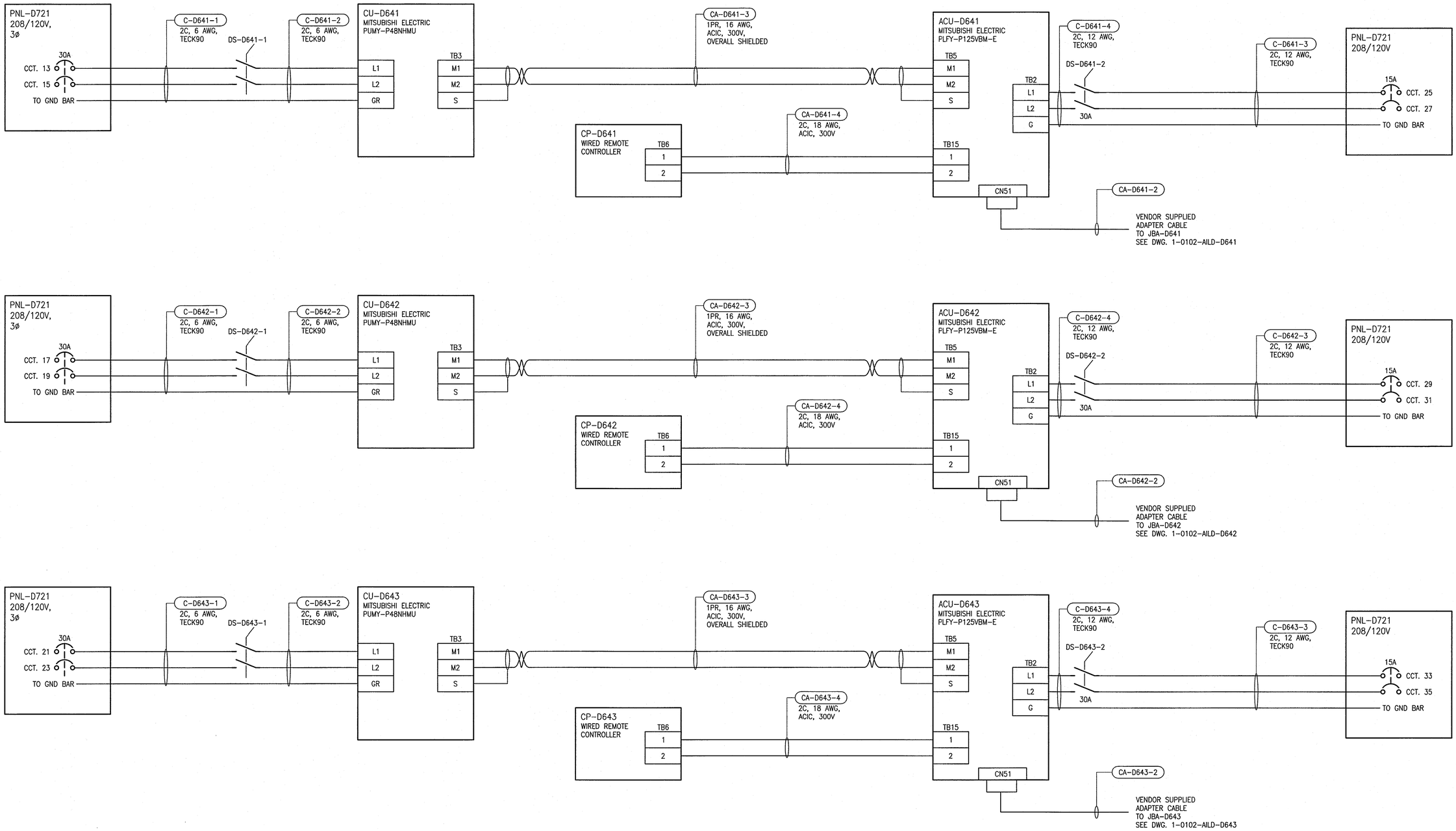

REFERENCE DRAWINGS	DESCRIPTION
1-0102-ESCH-T001	PANEL SCHEDULES
1-0102-EAAA-A001	ELECTRICAL, LEGEND AND DETAILS

APEGM
Certificate of Authorization
SNC-Lavalin Inc.
No. 4489

NO.	REVISIONS	DATE	DESIGN	CHECK
00	ISSUED FOR CONSTRUCTION – 976-2016	2017/04/05	VVE	DEB

CH2MHILL.
SNC·LAVALIN
KGS GROUP CONSULTING ENGINEERS

DESIGNED BY: V. ELIMBAN	CHECKED BY: E. RYCZKOWSKI
DRAWN BY: MJ. PERSSON	APPROVED BY: D. BECKER
SCALE: NTS	ISSUED FOR CONSTRUCTION BY: J. SHUMKA
DATE: 2016/06/28	DATE: 2017/04/05
CONSULTANT NO.: 474248	

ENGINEER'S SEAL
PROVINCE OF MANITOBA
D.E. BECKER
Member
23646
REGISTERED PROFESSIONAL ENGINEER
April 5/ 2017

Winnipeg
THE CITY OF WINNIPEG
WATER AND WASTE DEPARTMENT

SOUTH END WATER POLLUTION CONTROL CENTRE
SEWPCC UPGRADING/EXPANSION PROJECT
ELECTRICAL – WIRING DIAGRAM
FERMENTERS/THICKENERS
CU-D641, CU-D642, CU-D643 AND ACU-D641, ACU-D642, ACU-D643

CITY DRAWING NUMBER	SHEET	REV.	SIZE
1-0102-EWDG-D001	001	00	A1

LAST SAVE: 2017/03/24 – 2:24pm
PATH: C:\Users\persm2\DWG\1-0102-EWDG-D001.dwg

PLOT DATE: Mar 24, 2017 – 2:24pm

FILE NAME:1-0102-EWDG-D001.dwg