A1 SIZE – 594mm x 841mm

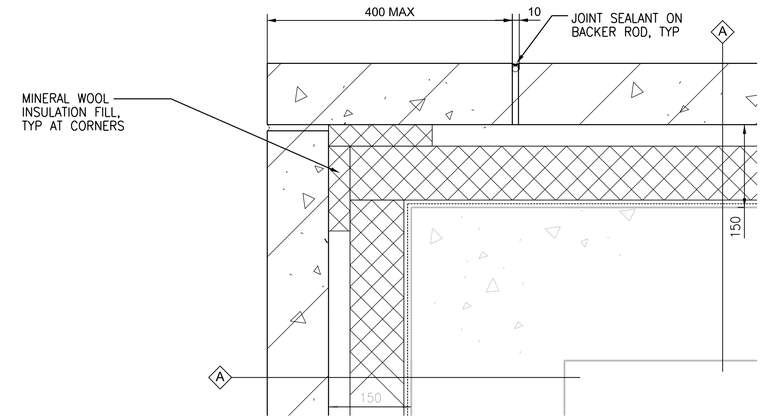

1 TYPICAL VENEER WALL PLAN DETAIL AT CORNER
1:5
BGAD–P001

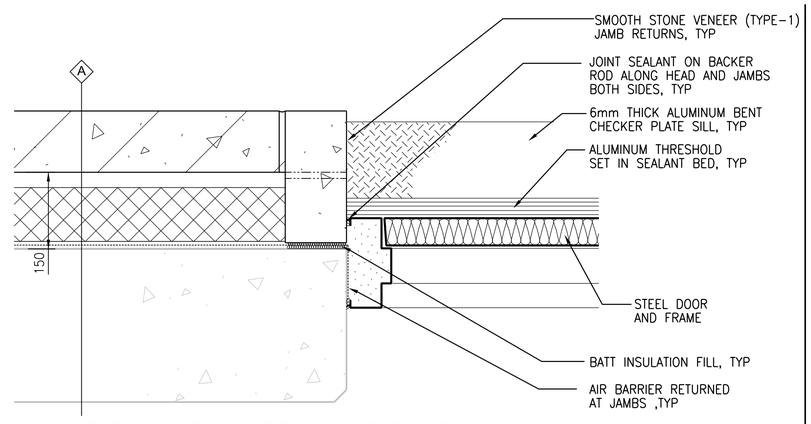

2 TYPICAL PLAN DETAIL AT DOOR JAMB
1:5
BGAD–P001

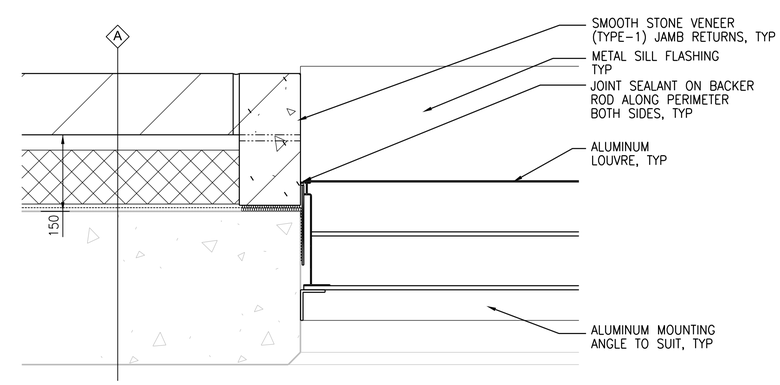

3 TYPICAL PLAN DETAIL AT LOUVER JAMB
1:5
BGAD–P001

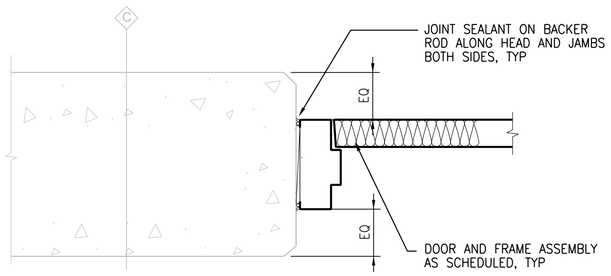

4 TYPICAL PLAN DETAIL AT STEEL DOOR JAMB
1:5
BGAD–P001

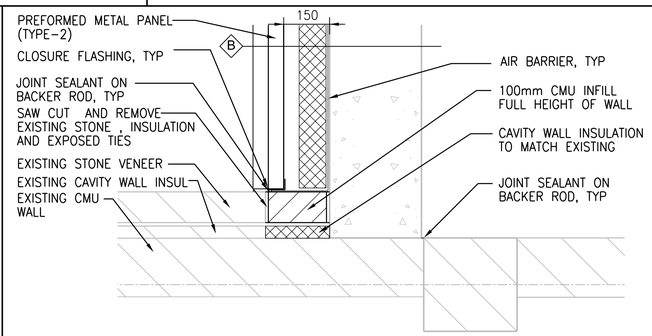

5 PLAN DETAIL
1:5
BGAD–P001

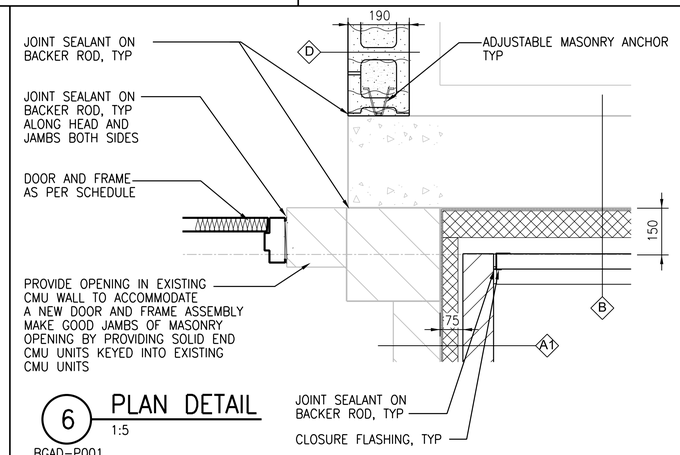

6 PLAN DETAIL
1:5
BGAD–P001

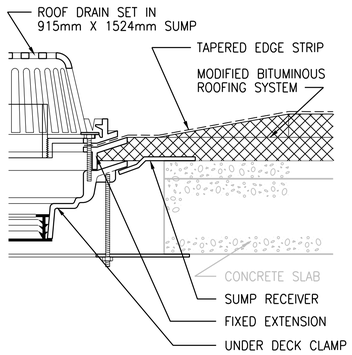

7 SECTION DETAIL
NTS
BGAD–P001

ROOM FINISH SCHEDULE

SPACE		FLOOR		BASE			NORTH WALL		EAST WALL		SOUTH WALL		WEST WALL		CEILING			MISCELLANEOUS			OTHER REQUIREMENTS
RM NO.	NAME	SUB FLOOR	FIN	HGT	MATL	FIN	MATL	FIN	MATL	FIN	MATL	FIN	MATL	FIN	MATL	FIN	HGT	ITEM	MATL	FIN	
P–116	STAIR	CONC	SLR*	100	CONC	SLR*	CONC	CS	CONC	CS	CONC	CS	CONC	CS	CONC	CS	–	RAILING	AL	FCTY	* FINISH TO TREADS AND RISERS

ABBREVIATIONS

AC	ACOUSTICAL CEILING	CLR	CLEAR	CS	COLORED SEALER	FWC	FABRIC WALL COVERING	HDNR	HARDENER	PNL	PANELING	SLR	SEALER	VT	VINYL TILE
ACFL	ACCESS FLOORING	CEMBD	CEMENT BOARD	CRC	CHEMICAL RESISTANT COATING	FNSH	FINISH	MATL	MATERIAL	PTD	PAINTED	SMLS	SEAMLESS EXPOXY	VWC	VINYL WALL COVERING
ACMU	ACOUSTICAL CMU	CMU	CONCRETE MASONRY UNITS	CT	CERAMIC TILE	GMU	GLASS MASONRY UNITS	MDO	MEDIUM DENSITY OVERLAY	PTN	PARTITION	SMLQ	SEAMLESS FLOORING (QUARTZ)	X	OPEN
ACT	ACOUSTIC TILE CEILING			EIFS	EXTERIOR INSULATION FINISH SYSTEM	GCMU	GLAZED CONCRETE MASONRY	METAL	METAL	QT	QUARRY TILE	SOI	SPRAYED – ON INSULATION		
AFPP	ALUMINUM FACED PLYWOOD PANEL	COL	COLOR			GWB	GYPSUM BOARD	PLAM	PLASTIC LAMINATE	RESIL	RESILIENT	SVIN	SHEET VINYL		
		CONC	CONCRETE	EXP	EXPOSED STRUCTURE	GSB	GYPSUM SOFFIT BOARD	PLAS	PLASTER	RRUB	RADIAL RUBBER FLOORING	TCTG	TRAFFIC COATING		
AL	ALUMINUM	CNTR	COUNTER	FCTY	FACTORY	GLZ	GLAZING	PAVT	PAVER TILE	RSF	RUBBER SHEET FLOORING SEALER	TLS	TO LATER SELECTION		
BRK	BRICK	CPT	CARPET	FRP	FIBERGLASS REINFORCED PLASTIC	HGT	HEIGHT	PLWD	PLYWOOD	SF	SPECIAL (SEAMLESS) FLOORING	VCT	VINYL COMPOSITION TILE		

GENERAL NOTES

1. PROVIDE ABRASIVE NOSING INSERTS ON ALL STAIRS AND LANDING.
2. PAINT ALL EXPOSED STEEL STRUCTURE WHICH HAS NOT BEEN GALVANIZED.
3. PAINT U/S OF STAIRS, LANDINGS AND ALL EXPOSED METAL COMPONENTS.
4. EXTENT OF CT ON WALLS MIN. 200mm ABOVE CEILING.
5. COLOUR OF ALL FINISHES: TLS
6. PAINT WALLS BEHIND LOCKERS AND GWB BULKHEAD ABOVE LOCKERS

DOOR AND HARDWARE SCHEDULE

DOOR NO.	FROM ROOM NO.	TO ROOM NO.	DOOR DATA: DOOR SIZE	ULC LABEL (MINUTES)	DOOR TYPE	MATERIAL	FINISH	GLASS	FRAME DATA: FRAME TYPE (ELEVATION)	MATERIAL	FINISH	FRAME TYPE (SECTION)	HARDWARE DATA: HINGE	LOCKSET	EXIT DEVICE	CLOSER	DOOR STOP	BOLTS	KICKPLATE	THRESHOLD	AUTOMATIC DOOR BOTTOM	WEATHER STRIPPING	ELECTRIC STRIKE / ELECTRIC HINGES	POWER SUPPLY	PULL HANDLE	SECURITY CONTROL SYSTEM	NAMEPLATE	MISCELLANEOUS
P–116–A	EXST	P–116	900 x 2150	45	D2	STL	PTD	WG	F1	STL	PTD	1	H4	L16	X1	C6	S1	––	K1	––	––	W2	––	––	––	––	––	VERIFY FIELD MEASUREMENTS
P–116–B	G–B01	P–116	900 x 2150	45	D2	STL	PTD	WG	F1	STL	PTD	1	H4	L16	X1	C6	S2	––	K1	––	––	W2	––	––	––	––	––	VERIFY FIELD MEASUREMENTS
P–116–C	P–116	EXT	900 x 2250	45	D1	STL	PTD	––	F1	STL	PTD	1	H4	L16	X1	C6	S1	––	K1	T3	A1	W2	––	––	––	––	––	VERIFY FIELD MEASUREMENTS
P–116–D	EXST	P–116	900 x 2150	45	D2	STL	PTD	WG	F1	STL	PTD	1	H4	L16	X1	C6	S2	––	K1	––	––	W2	––	––	––	––	––	VERIFY FIELD MEASUREMENTS

DOOR TYPES

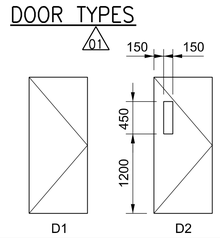

FRAME TYPES

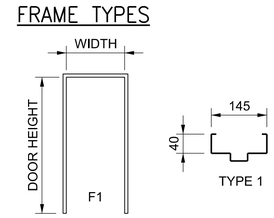

ABBREVIATIONS

AL	ALUMINUM	FRP	FIBERGLASS RE–INFORCED PLASTIC	P–P	PUSH – PULL		
AS	AS SELECTED	HM	HOLLOW METAL	PTD	PAINTED		
CA	CLEAR ANNODIZED	IP	INSULATED PANEL	PS	POWER SUPPLY		
CLSR	CLOSER	IAP	INSULATED ALUMINUM PANEL	RFS	ROLL–UP FIRE SHUTTER		
COL	COLOUR	KEY	KEY GROUP	SCI	SECURITY CONTROL ITEMS		
CONSTR	CONSTRUCTION	K–PL	KICKPLATE (BOTH SIDES)	STL	STEEL		
ES	ELECTRIC STRIKE	MATL	MATERIAL	SST	STAINLESS STEEL		
FCTY	FACTORY	MET	METAL	TSHD	THRESHOLD		
FNSH	FINISH	OHD	OVERHEAD ROLLING DOOR	TLS	TO LATER SELECTION		
				W–S	WEATHERSTRIPPING	WG	WIRED GLAZING

GENERAL NOTES

1. PROVIDE DOOR HARDWARE ON BOTH LEAFS IN PAIRS OF DOORS, UNLESS NOTED OTHERWISE.
2. PROVIDE KICKPLATES ON BOTH SIDES OF DOORS UNLESS NOTED OTHERWISE.
3. ALL EXTERIOR METAL ROLLING DOORS ARE TO BE INSULATED.
4. SEE SPECIFICATION SECTION 08 80 00 FOR TYPES OF GLASS.
5. ELECTRIC STRIKE ,ELECTRIC HINGES & SECURITY CONTROL SYSTEM BY OTHERS.

APEGM
Certificate of Authorization
CH2M HILL Canada Ltd.
No. 1441

NO.	REVISIONS	DATE	DESIGN	CHECK
04	ISSUED FOR ADDENDUM 3 – 976–2016	2017/06/21	R.B.	J.C.
03	ISSUED FOR CONSTRUCTION – 976–2016	2017/04/05	N.B.	J.C.
02	ISSUED FOR CONSTRUCTION	10/2015	N.B.	J.C.
01	ISSUED FOR ADDENDUM NO. 2	09/2015	R.Z.	J.C.
00	ISSUED FOR TENDER	08/2015	N.B.	J.C.

CH2MHILL CANADA Architects Inc.
SNC·LAVALIN KGS GROUP
DESIGNED BY: R. ZAKKO
DRAWN BY: J. LIN
SCALE: AS SHOWN
DATE: 2017/04/05
CHECKED BY: B. KOLIS–HUPA
APPROVED BY: H.T. FRIEHAMMER
ISSUED FOR CONSTRUCTION
BY: J. SHUMKA
DATE: 2017/04/05
CONSULTANT NO.: 474248

ENGINEER'S SEAL
PROVINCE OF MANITOBA REID ZAKKO 5-21-2017 REGISTERED ARCHITECT

Winnipeg
THE CITY OF WINNIPEG
WATER AND WASTE DEPARTMENT

SOUTH END WATER POLLUTION CONTROL CENTRE
SEWPCC UPGRADING/EXPANSION PROJECT
BUILDING
PRIMARY CLARIFIERS
PLAN DETAILS AND SCHEDULES

CITY DRAWING NUMBER: 1–0102–BGAD–P002
SHEET
REV. 04
SIZE A1

PLOT DATE: 2017\06\21
FILE NAME:

©CH2M HILL 2017. ALL RIGHTS RESERVED.