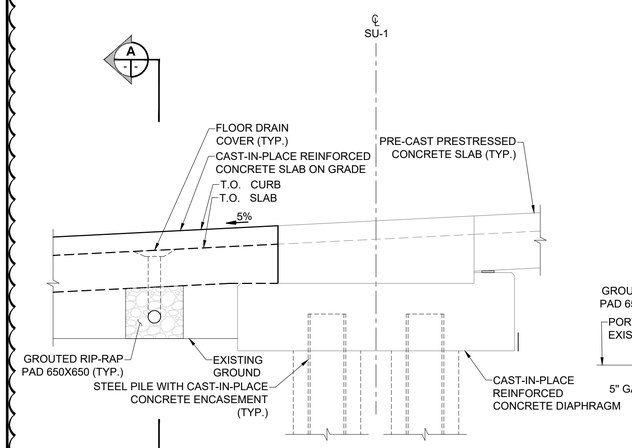

SU-1 DRAINAGE ELEVATION

SCALE: 1:25

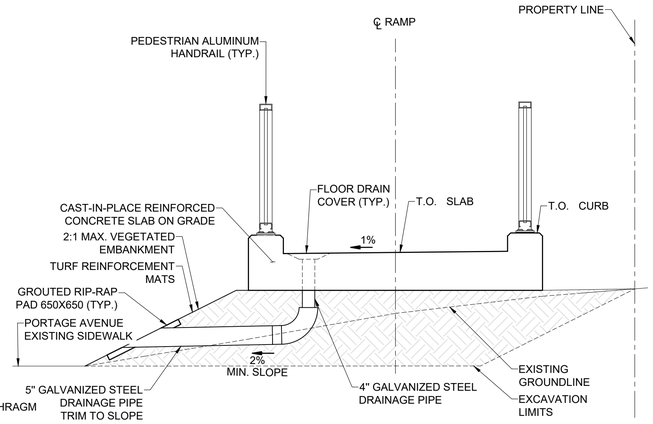

A SECTION

SCALE: 1:25

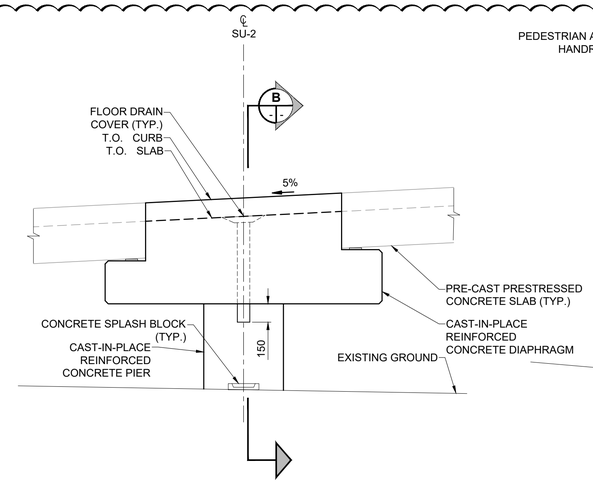

SU-2 DRAINAGE ELEVATION

SCALE: 1:25

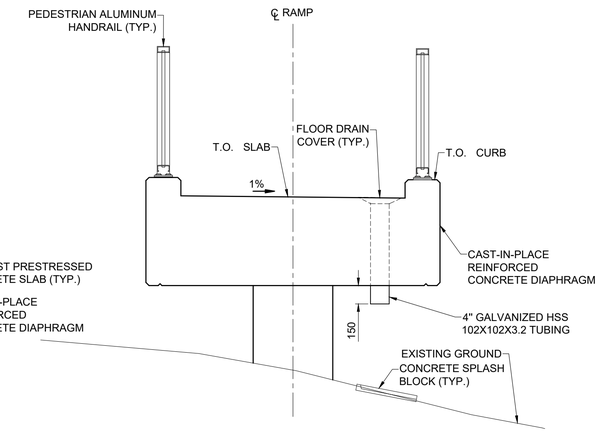

B SECTION

SCALE: 1:25

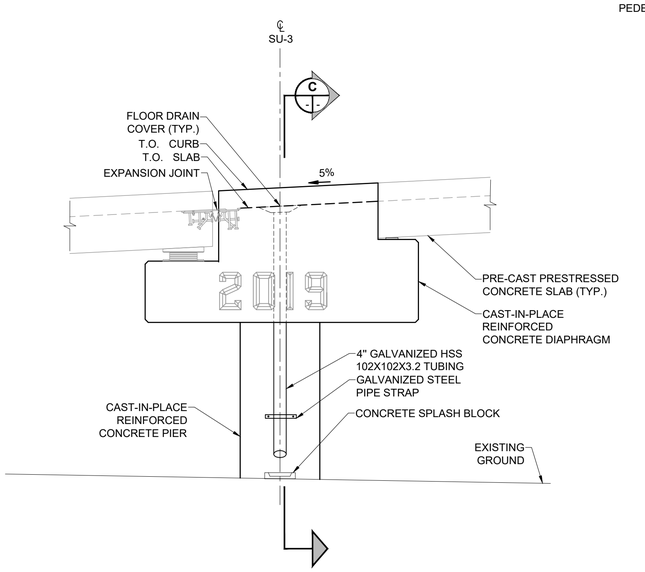

SU-3 DRAINAGE ELEVATION

SCALE: 1:25

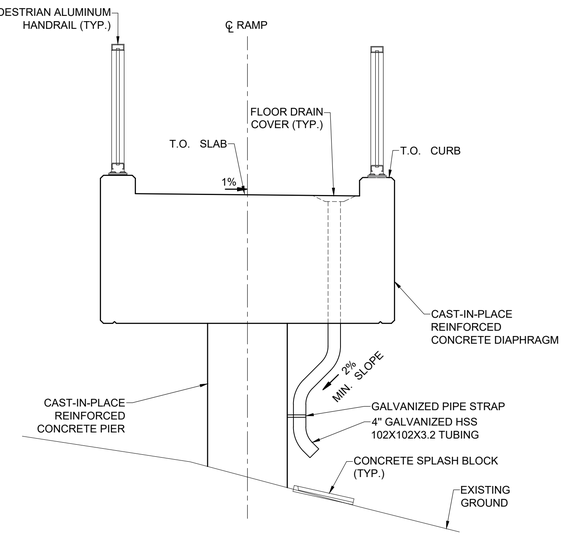

C SECTION

SCALE: 1:25

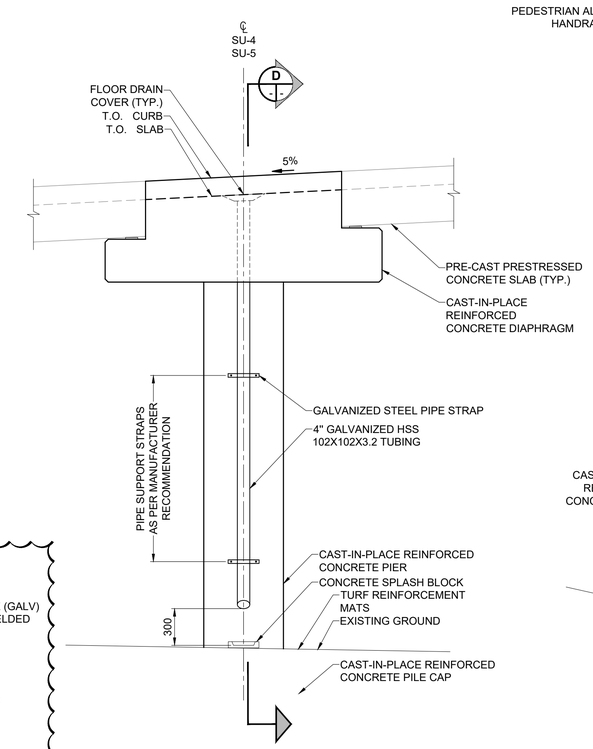

SU- 4&5 DRAINAGE ELEVATION

SCALE: 1:25

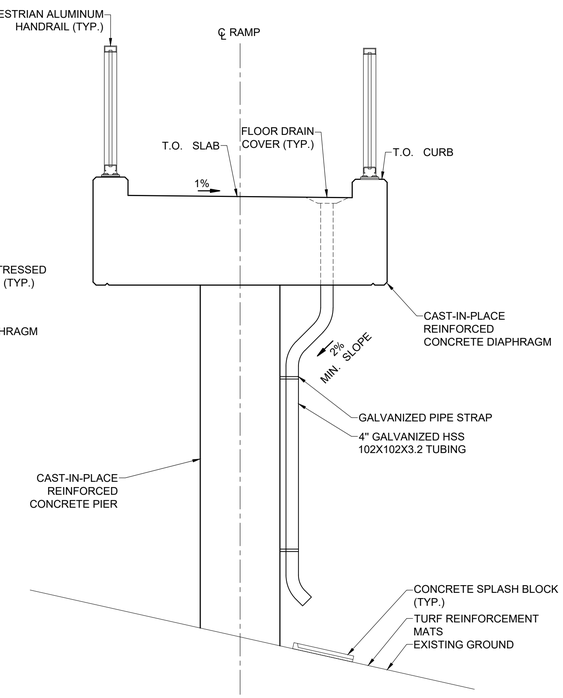

D SECTION

SCALE: 1:25

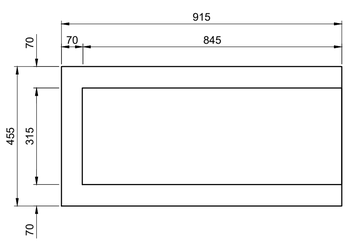

CONCRETE SPLASH BLOCK PLAN

SCALE: 1:10

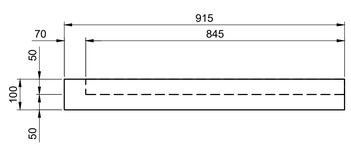

CONCRETE SPLASH BLOCK ELEVATION

SCALE: 1:10

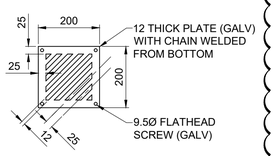

NOTE: 12mm SLOTS AT 25 mm O/C, AT 45° TO PLATE EDGES WITH 25 mm CONTINUOUS EDGE

DETAIL - DECK DRAIN PLATE

SCALE: 1:10

BID OPPORTUNITY No. 602-2018

ENGINEERS GEOSCIENTISTS MANITOBA
Certificate of Authorization
MORRISON HERSHFIELD
No. 1736

METRIC
WHOLE NUMBERS INDICATE MILLIMETRES
DECIMALIZED NUMBERS INDICATE METRES

LOCATION APPROVED
UNDERGROUND STRUCTURES

SUPR. U/G STRUCTURES COMMITTEE — DATE

NOTE:
LOCATION OF UNDERGROUND STRUCTURES AS SHOWN ARE BASED ON THE BEST INFORMATION AVAILABLE BUT NO GUARANTEE IS GIVEN THAT ALL EXISTING UTILITIES ARE SHOWN OR THAT THE GIVEN LOCATIONS ARE EXACT. CONFIRMATION OF EXISTENCE AND EXACT LOCATION OF ALL SERVICES MUST BE OBTAINED FROM THE INDIVIDUAL UTILITIES BEFORE PROCEEDING WITH CONSTRUCTION.

BM
ELEV

No.	REVISIONS	YY/MM/DD	BY
C	ISSUED FOR ADDENDUM 1	18/10/05	BAP
B	ISSUED FOR TENDER	18/08/04	BAP
A	ISSUED FOR 95% DESIGN REVIEW	18/08/07	BAP

MORRISON HERSHFIELD

DESIGNED BY	YM	CHECKED BY	AF
DRAWN BY	ALP	APPROVED BY	BAP
HOR SCALE	AS SHOWN	RELEASED FOR CONSTRUCTION	
VERT SCALE	AS SHOWN	N/A	
DATE		DATE	

PROFESSIONAL'S SEAL
PROVINCE OF MANITOBA
A. FATHI
Member
41159
REGISTERED PROFESSIONAL ENGINEER

CONSULTANT FILE NAME
W160034 - DD NR.DWG

Winnipeg

THE CITY OF WINNIPEG
PUBLIC WORKS DEPARTMENT
ENGINEERING DIVISION

EMPRESS STREET PROJECT
PEDESTRIAN ACCESSIBILITY RAMPS
NORTH RAMP
DRAINAGE DETAILS

CITY DRAWING NUMBER: P-3494-159
SHEET 159 OF 169
DRAWING No. 159 REV C

ISO A1 - 594mm x 841mm

O:\Winnipeg\Proj\W160034\ Design\1 Drawings\06 Sheets\Detailed Design\Structural\Pedestrian Ramps\W160034 - DD NR.dwg Last Saved: 10/5/2018 3:48 PM by AHepgoner Plotted: 10/5/2018 4:13 PM by Alex Hepgoner