AECOM

SHOP DRAWING DISTRIBUTION

PROJECT NAME:	WSTP - NEWPCC - Primary Clarifiers Supply of Rotary Press and Appurtenances	PAGE	1 of 1
		PROJECT NO.:	60661262
CONTRACTOR:	Fournier Industries Inc.	DATE:	
SUPPLIER/MANUFACTURER	Fournier Industries Inc.	DATE RECEIVED:	July 12, 2023
DRAWING SUBJECT:	SD-01-Dewatering Scope of Supply		

****THIS SHEET MUST REMAIN WITH SHOP DRAWING. DO NOT DETACH!!****

Distribution	**MK**	**NW**					
Comments							

One copy of the following is attached for your review.

Submission No. : SD-01	**SUBMITTAL REVIEW** AECOM		
Project No. : 60661262		Discipline : Process	
	Reviewed - No Comment	X	Reviewed - Revise and Resubmit
	Reviewed - As Noted		Review by Consultant Not Required

Review is solely for general conformity with contract. The Consultant does not warrant or represent that information in this submittal is accurate or complete. Review does not relieve Contractor of responsibility for errors/omissions in designs, including this submittal, that are the Contractor's responsibility, and for conforming/correlating with all quantities/dimensions, performing the Work, selecting performance means/methods, coordinating with other parts of the Work/between trades, and performing the Work safely. Notwithstanding this review, Contractor remains solely responsible for contract compliance.

By : MK	Date : July 26, 2023

1) Replace the 75mm Sludge Magmeter with a 100mm. The flowmeter will not be installed directly before the flocculator. (see page 11 and tender drawing P3-X602)
2) Provide Process Control Narrative based on controlling the FCV (not sludge pumps).
3) Can you provide sludge chutes that merge and connect directly to the bin entry point (see page 20)
4) Why is the location of the flocculator changed compared to the tender drawings? Are the floor penetrations for the pipes in the same place compared to tender drawings or were they adjusted? (see page 6 and tender drawing P3-D102A)
5) Provide spare parts according to 43 21 20 Clause 2.6 and 44 46 16 Clause 1.4
6) Is the water pressure regulator on the polymer water supply line provided? (see page 259)
7) change language to English on the polymer P&ID (see page 260)

Documents and shop drawings
For Approval

City of Winnipeg, Winnipeg, MB

Fournier Industries Inc.
3787, Frontenac Blvd. West,
Thetford Mines (Quebec) Canada, G6H 2B5
www.fournierindustries.com

Rev. 0
2023-07-11
F.Binette, P. Eng.

Table of contents

Section 1 : Mechanical drawings

Section 2 : Electrical drawings

Section 3 : Technical datasheets

Section 4 : Other Documents

Section 1

Mechanical Drawings

Mechanical Drawings

Sheet	Rev	Description
53371 1 of 1	Rev.00	Dewatering System - Rotary Press - Layout
53372 1 of 1	Rev.00	Dewatering System - Rotary Press #1 - General arrangement
53373 1 of 1	Rev.00	Dewatering System - Rotary Press #2 - General arrangement
53374 1 of 1	Rev.00	Dewatering System - Rotary #1 Press Assembly - Exploded view
53375 1 of 1	Rev.00	Dewatering System - Rotary #2 Press Assembly- Exploded view
53376 1 of 1	Rev.0	Dewatering System - Rotary Press #1 - Process diagram
53377 1 of 1	Rev.0	Dewatering System - Rotary Press #2 - Process diagram
53378 1 of 1	Rev.00	Dewatering System - Flocculator #1 - General arrangement
53379 1 of 1	Rev.00	Dewatering System - Flocculator #2- General arrangement
53380 1 of 1	Rev.00	Dewatering System - Piping arrangement - Flocculator #1 inlet section
53381 1 of 1	Rev.00	Dewatering System - Piping arrangement - Flocculator #2 inlet section
53382 1 of 1	Rev.00	Dewatering System - Piping arrangement - Flocculator #1 outlet section
53383 1 of 1	Rev.00	Dewatering System - Piping arrangement - Flocculator #2 outlet section
53384 1 of 1	Rev.00	Dewatering System - Rotary Press #1 - Cake chute arrangement
53385 1 of 1	Rev.00	Dewatering System - Rotary Press #2 - Cake chute arrangement
53388 1 of 1	Rev.00	Dewatering System - Rotary Press - Floor plan
53389 1 of 1	Rev.00	Dewatering System - Rotary Press - Channel assembly
STD-1417 1 of 1	Rev.00	Dewatering System - Rotary Press - Field pipe connection

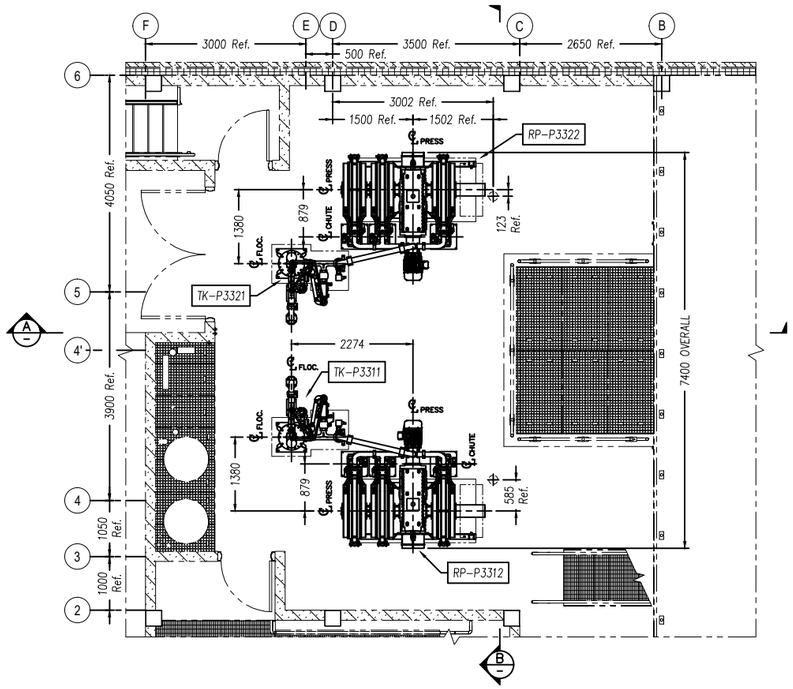

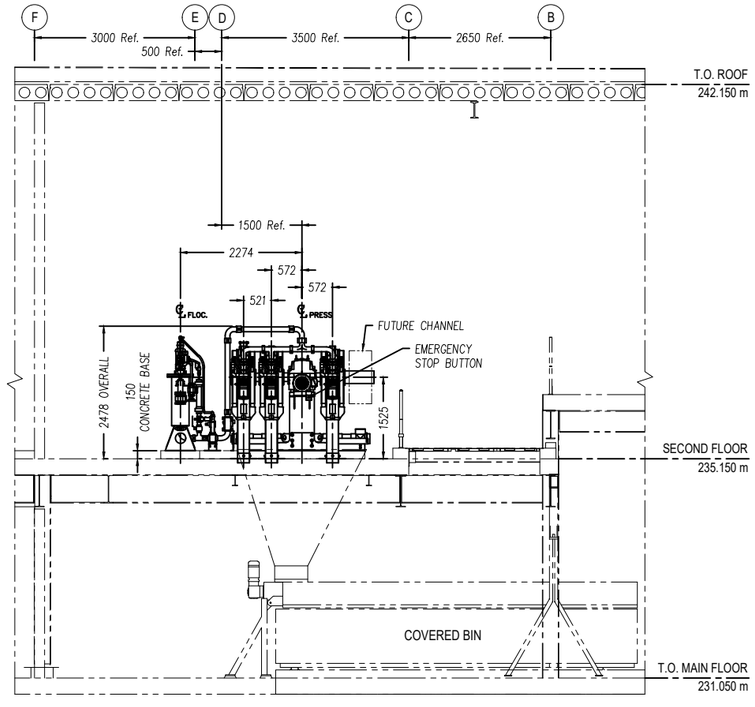

SECTION A

why are the flocculators moved in comparison to original layout?

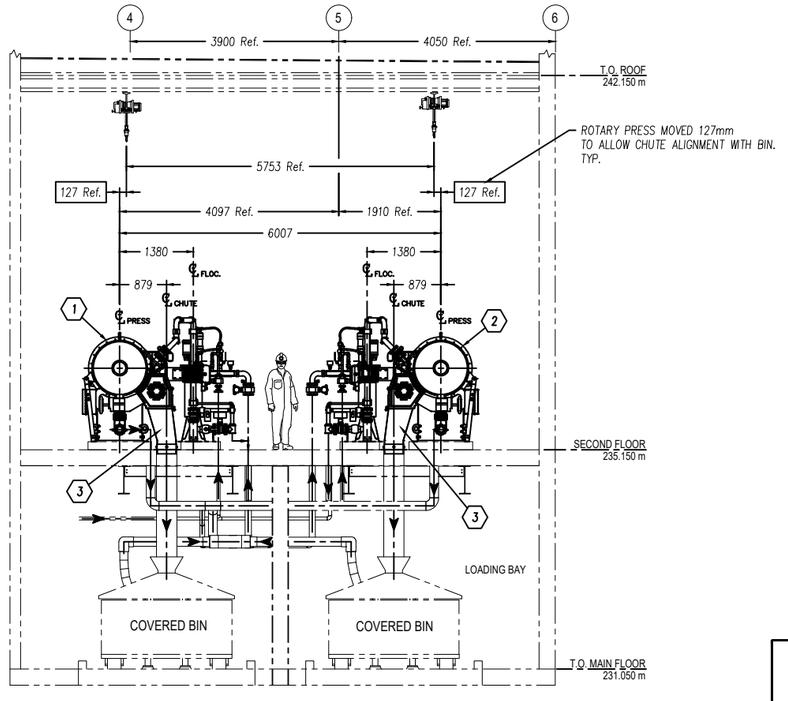

SECTION B

ARTICLE ITEM	REPÈRE REF.	NOMBRE QTY(1)	DÉSIGNATION / DESIGNATION	MATÉRIEL MATERIAL	POIDS(kg) WEIGHT UNIT.(1)	REMARQUES / NOTES - #1FI	AVIS AVIS
1		1	ROTARY PRESS # 1 MODEL 3(4)-900/4000CVP-SS304	SS304L	5415	D-53372	
2		1	ROTARY PRESS # 2 MODEL 3(4)-900/4000CVP-SS304	SS304L	5415	D-53373	
3		6	CHUTE EXTENSION	SS304L	34		
4		1	LIQUID POLYMER SYSTEM ø1/2" (2 PUMPS) NOT SHOWN	SS	150	P-P3411 / P-P3412	
300		1	CONTROL PANEL C/W AIR COND. NOT SHOWN	STEEL	180		
301		1	SPARE PARTS NOT SHOWN				

(1) LA QUANTITÉ EST DONNÉE POUR UN ASSEMBLAGE / QUANTITY GIVEN IS FOR ONE ASSEMBLY.
(2) LA QUANTITÉ EST DONNÉE POUR UN ASSEMBLAGE EXCLUANT LES ARTICLES MARQUÉS D'UN ASTÉRISQUE / QUANTITY GIVEN FOR ONE ASSEMBLY EXCLUDING ITEMS MARKED WITH AN ASTERISK.

PEINTURE(m2) PAINT SURFACE(2)	0	CAOUTCHOUC(m2) RUBBER SURFACE(2)	0	PL.USURE(kg) WEIGHT OF LINERS(2)	0	POIDS TOT.(kg) TOT. WEIGHT(2)	11370	REQUIS TOTAL TOTAL REQ'D	1

Grand./Size D | Dessin No / Drawing No. 53371 | Page/Sheet 1 of 1 | Révision 00

No Projet / Project No. 2023-11911 | No Production / Job No. 23-8456

LÉGENDE/LEGEND

1 @ 299 = ASSEMBLAGES FABRIQUÉS / FABRICATED ASSEMBLY
300 @ 499 = COMPOSANTES MÉCANIQUE / MECHANICAL COMPONENTS
500 @ 699 = BOULONNERIE / BOLTS

NOTES GÉNÉRALES/GENERAL NOTES

TOTAL WEIGHT:
11370 KG
25014 LBS

NO.	REVISIONS	DATE (DD-MM-YY)	BY/PAR

THIRD ANGLE PROJECTION
PROJECTION TROISIEME ANGLE

SURFACE FINISH 125 / FINITION SURFACE

Tolérances sauf indications contraires/Tolerances unless otherwise stated

SYSTÈME IMPÉRIAL / IMPERIAL SYSTEM			SYSTÈME MÉTRIQUE / METRIC SYSTEM		
	0 - 36"	36" +		0 - 1000mm	1000mm +
FRACTION	± 1/16"	± 1/8"	ENTIER / INTEGER	± 1 mm	± 2mm
2 PLACES .XX	± .010"		1 PLACES .X	± .50 mm	
3 PLACES .XXX	± .005"		2 PLACES .XX	± .25 mm	
ANGLES	± 1/2°		3 PLACES .XXX	± .125 mm	

Ébavurer les arêtes vives (S.I.C.)/Deburring sharp edges (U.O.S)

Weld inspection according CSA W59 section 11 except otherwise noted
VT: 100% PT: As per symbol
UT: As per symbol MT: As per symbol
Sealed welds: 100% LT (leak test)
Lifting lugs: 100% MT , 100%VT

Inspection des soudures selon CSA W59 section 11 sauf indication contraire
VT: 100% PT: Selon symbole
UT: Selon symbole MT: Selon symbole
Soudures étanches: 100% LT (essai d'étanchéité)
Anneaux de levage: 100% MT , 100%VT

THIS DRAWING AND ALL THE INFORMATION IT CONTAINS ARE THE EXCLUSIVE PROPERTY OF LES INDUSTRIES FOURNIER INC. IT IS STRICTLY FORBIDDEN TO COMMUNICATE OR USE THE INFORMATION FOR PURPOSES OTHER THAN THE ORIGINAL INTENDED ONES OR IF THE USE COULD BE HARMFUL TO THE INTERESTS OF LES INDUSTRIES FOURNIER INC. THIS DRAWING IN WHOLE OR IN PART MAY NOT BE REPRODUCED IN ANY FASHION AND HAS TO BE RETURNED TO LES INDUSTRIES FOURNIER INC. UPON REQUEST.

CE DESSIN ET TOUTES LES INFORMATIONS QU'IL CONTIENT SONT LA PROPRIÉTÉ EXCLUSIVE DE LES INDUSTRIES FOURNIER INC. IL EST STRICTEMENT INTERDIT DE COMMUNIQUER OU UTILISER SON CONTENU À D'AUTRES FINS QUE CELLES PRÉVUES ORIGINALEMENT OU POUVANT ÊTRE PRÉJUDICIABLES AUX INTÉRÊTS DE LES INDUSTRIES FOURNIER INC. TOUTE REPRODUCTION DE CE DESSIN EST INTERDITE ET IL DOIT ÊTRE RETOURNÉ SUR DEMANDE.

Lire conjointement avec PRIE approuvé / Read in conjunction with the approved ITP

Par	Date (DD/MM/YY)	MONT	ELEC	EXPÉD						
ETAPES		1	2	3	4	5	6	7	8	9

23-8456

FOURNIER INDUSTRIES INC.
LES INDUSTRIES FOURNIER INC.
3787 BOUL. FRONTENAC, THETFORD-MINES
QUEBEC, CANADA, G6H-2B5

WINNIPEG, MB
DEWATERING SYSTEM
ROTARY PRESS ø900mm
LAYOUT
MODEL (2X) 3(4)-900/4000CVP-SS304

Dessiné / Drawn	Vérifié / Checked	Approuvé / Approved	No 1FI / 1FI No.
M.BERNIER	E.GAMACHE	D. CLICHE	
Date 03-07-2023	Echelle / Scale 1:50	No Équipement du Client / Customer Equipment No.	

Grand./Size D | Dessin No / Drawing No. 53371 | Page/Sheet 1 of 1 | Révision 00

FQF004 (08-2017)

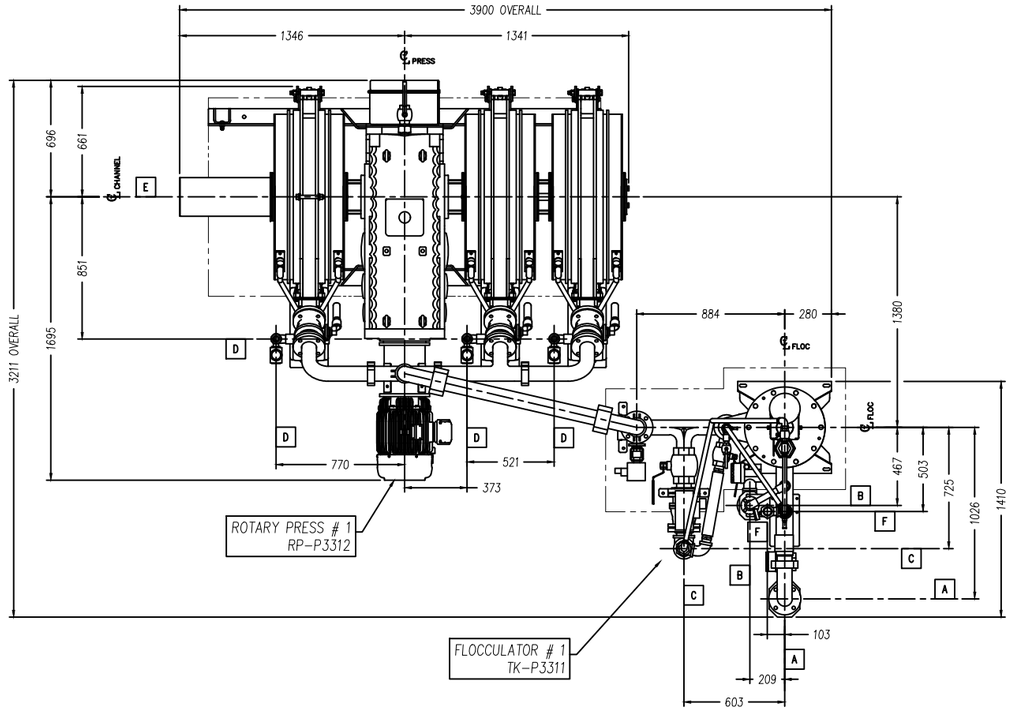

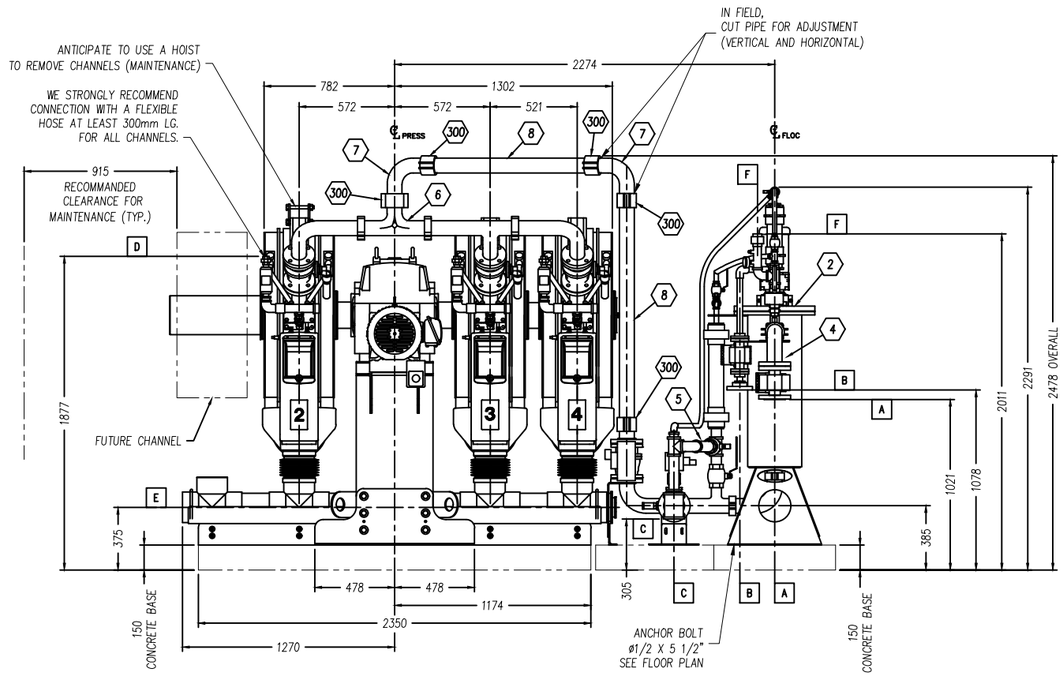

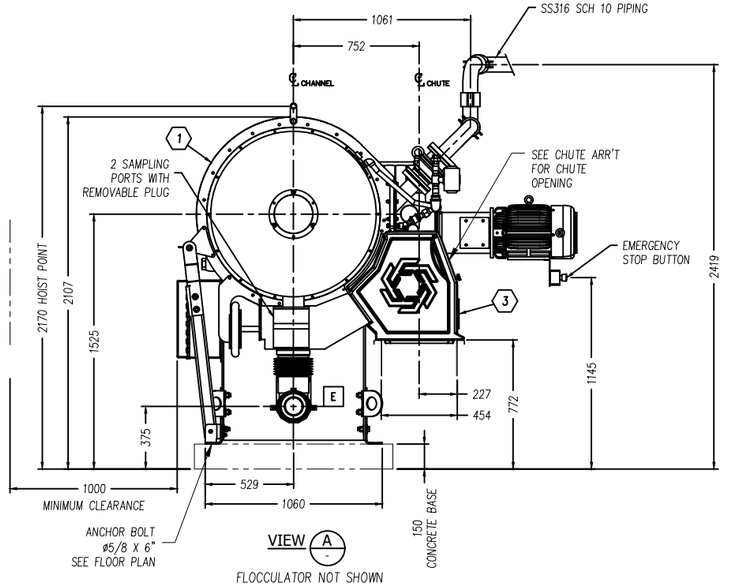

ARTICLE ITEM	REPÈRE REF.	NOMBRE QTY(1)	DÉSIGNATION / DESIGNATION	MATÉRIEL MATERIAL	POIDS(kg) WEIGHT UNIT.(1)	REMARQUES / NOTES - #1FI
1		1	ROTARY PRESS #1 EXPLODED VIEW	S.S.304L	4955	D-53374
			FLOOR PLAN			D-53388
			FLOW SHEET #1			D-53376
2		1	FLOCCULATOR #1 ASSEMBLY	STEEL	216	D-53378
3		3	CAKE CHUTE #1 ASSEMBLY	LLDPE	7	D-53384
4		1	FLOCCULATOR #1 INLET PIPING	S.S.316L	52	D-53380
5		1	FLOCCULATOR #1 OUTLET PIPING	S.S.316L	109	D-53382
6		1	MIDDLE MANIFOLD ø3"	S.S.316L	4	IFI-02314
7		2	ADJUSTING ELBOW 90°, ø3"	S.S.316L	3	IFI-01620
8		2	FEED PIPE ø3" X 80" (CUT TO SUIT)	S.S.316L	14	IFI-02464
300		5	RIGID UNION ø3", TYPE "ROUST-A-BOUT"	CAST IRON	4	VICTAULIC, STYLE 99 VI-99-3

INTERFACE BETWEEN PIPING OF ROTARY PRESS AND CUSTOMER PIPING

- A — SLUDGE INLET ø76.2mm(ø3") (FLANGE)
- B — POLYMER INLET ø50.8mm(ø2")-(FLANGE)
- C — SLUDGE RECIRCULATION OUTLET ø76.2mm(ø3")-NPT
- D — WASH WATER INLET ø25.4mm(ø1")-NPT (3 PLACES) (ROTARY PRESS)
- E — FILTRATE OUTLET ø152.4mm(ø6") PIPE
- F — WASH WATER INLET ø38.1mm(ø1 1/2")-NPT (FLOCCULATOR)

(1) LA QUANTITÉ EST DONNÉE POUR UN ASSEMBLAGE / QUANTITY GIVEN IS FOR ONE ASSEMBLY.
(2) LA QUANTITÉ EST DONNÉE POUR UN ASSEMBLAGE EXCLUANT LES ARTICLES MARQUÉS D'UN ASTÉRISQUE / QUANTITY GIVEN FOR ONE ASSEMBLY EXCLUDING ITEMS MARKED WITH AN ASTERISK.

PEINTURE(m2) PAINT SURFACE(2)	0	CAOUTCHOUC(m2) RUBBER SURFACE(2)	0	PL.USURE(kg) WEIGHT OF LINERS(2)	0	POIDS TOT.(kg) TOT. WEIGHT(2)	5415	REQUIS TOTAL TOTAL REQ'D	1

Grand./Size D | Dessin No / Drawing No. 53372 | Page/Sheet 1 of 1 | Révision 00

No Projet / Project No. 2023-11911 | No Production / Job No. 23-8456

LÉGENDE/LEGEND

1 @ 299 = ASSEMBLAGES FABRIQUÉS / FABRICATED ASSEMBLY
300 @ 499 = COMPOSANTES MÉCANIQUE / MECHANICAL COMPONENTS
500 @ 699 = BOULONNERIE / BOLTS

NOTES GÉNÉRALES/GENERAL NOTES

TOTAL WEIGHT: 11913 LBS (5415 Kg)

ESTIMATED SLUDGE WEIGHT: 671 LBS (305 Kg)

PIPING AND ACCESSORIES DESIGNED AND TESTED TO RESIST AT 103 kPa (15 PSI) HYDROSTATIC PRESSURE.

NOTES:
- NOISE LEVEL: NOT EXCEED 75 dBA MEASURED AT 3 FEET FROM THE SOURCE.
- Fournier Industries Paint Procedure # 3

Surface preparation:
Sand blasting according to SSPC-SP10 for the equipment.
Pickling SSPC-SP8 for the piping.

Primer:
Type: Epoxy resin (high-built)
Dry thickness: 6 mils minimum

Paint:
Type: Polyurethane
Dry thickness: 1.5 mls by layer (2 layers) = 3 mls minimum
Total thickness: 9 mls minimum
Color: Carbothane 134 HG Special Fournier Blue V111

NO.	REVISIONS	DATE (DD-MM-YY)	BY/PAR

THIRD ANGLE PROJECTION
PROJECTION TROISIEME ANGLE

SURFACE FINISH 125 / FINITION SURFACE

Tolérances sauf indications contraires/Tolerances unless otherwise stated

SYSTÈME IMPÉRIAL / IMPERIAL SYSTEM			SYSTÈME MÉTRIQUE / METRIC SYSTEM		
	0 - 36"	36" +		0 - 1000mm	1000mm +
FRACTION	± 1/16"	± 1/8"	ENTIER / INTEGER	± 1 mm	± 2mm
2 PLACES .XX	± .010"	=	1 PLACES .X	± .50 mm	=
3 PLACES .XXX	± .005"	=	2 PLACES .XX	± .25 mm	=
ANGLES	± 1/2°		3 PLACES .XXX	± .125 mm	

Ébavurer les arêtes vives (S.I.C.)/Deburring sharp edges (U.O.S)

Weld inspection according CSA W59 section 11 except otherwise noted	Inspection des soudures selon CSA W59 section 11 sauf indication contraire
VT: 100% PT: As per symbol	VT: 100% PT: Selon symbole
UT: As per symbol MT: As per symbol	UT: Selon symbole MT: Selon symbole
Sealed welds: 100% LT (leak test)	Soudures étanches: 100% LT (essai d'étanchéité)
Lifting lugs: 100% MT , 100%VT	Anneaux de levage: 100% MT , 100%VT

THIS DRAWING AND ALL THE INFORMATION IT CONTAINS ARE THE EXCLUSIVE PROPERTY OF LES INDUSTRIES FOURNIER INC. IT IS STRICTLY FORBIDDEN TO COMMUNICATE OR USE THE INFORMATION FOR PURPOSES OTHER THAN THE ORIGINAL INTENDED ONES OR IF THE USE COULD BE HARMFUL TO THE INTERESTS OF LES INDUSTRIES FOURNIER INC. THIS DRAWING IN WHOLE OR IN PART MAY NOT BE REPRODUCED IN ANY FASHION AND HAS TO BE RETURNED TO LES INDUSTRIES FOURNIER INC. UPON REQUEST.

CE DESSIN ET TOUTES LES INFORMATIONS QU'IL CONTIENT SONT LA PROPRIÉTÉ EXCLUSIVE DE LES INDUSTRIES FOURNIER INC. IL EST STRICTEMENT INTERDIT DE COMMUNIQUER OU UTILISER SON CONTENU À D'AUTRES FINS QUE CELLES PRÉVUES ORIGINALEMENT OU POUVANT ÊTRE PRÉJUDICIABLES AUX INTÉRÊTS DE LES INDUSTRIES FOURNIER INC. TOUTE REPRODUCTION DE CE DESSIN EST INTERDITE ET IL DOIT ÊTRE RETOURNÉ SUR DEMANDE.

Lire conjointement avec PRIE approuvé / Read in conjunction with the approved ITP

Par	Date (DD/MM/YY)	MONT	ELEC							
ETAPES		1	2	3	4	5	6	7	8	9

23-8456

FOURNIER INDUSTRIES INC.
LES INDUSTRIES FOURNIER INC.
3787 BOUL. FRONTENAC, THETFORD-MINES
QUEBEC, CANADA, G6H-2B5

WINNIPEG, MB
DEWATERING SYSTEM
ROTARY PRESS ø900mm
GENERAL ARRANGEMENT ROTARY PRESS # 1
MODEL 3(4)-900/4000CVP-SS304

Dessiné / Drawn	Vérifié / Checked	Approuvé / Approved	No IFI / IFI No.
M.BERNIER	E.GAMACHE	D. CLICHE	
Date: 28-06-2023	Echelle / Scale: 1:16	No Équipement du client / Customer Equipment No. RP-P3312 & TK-P3311	

Grand./Size D | Dessin No / Drawing No. 53372 | Page/Sheet 1 of 1 | Révision 00

FQF804 (06-2017)

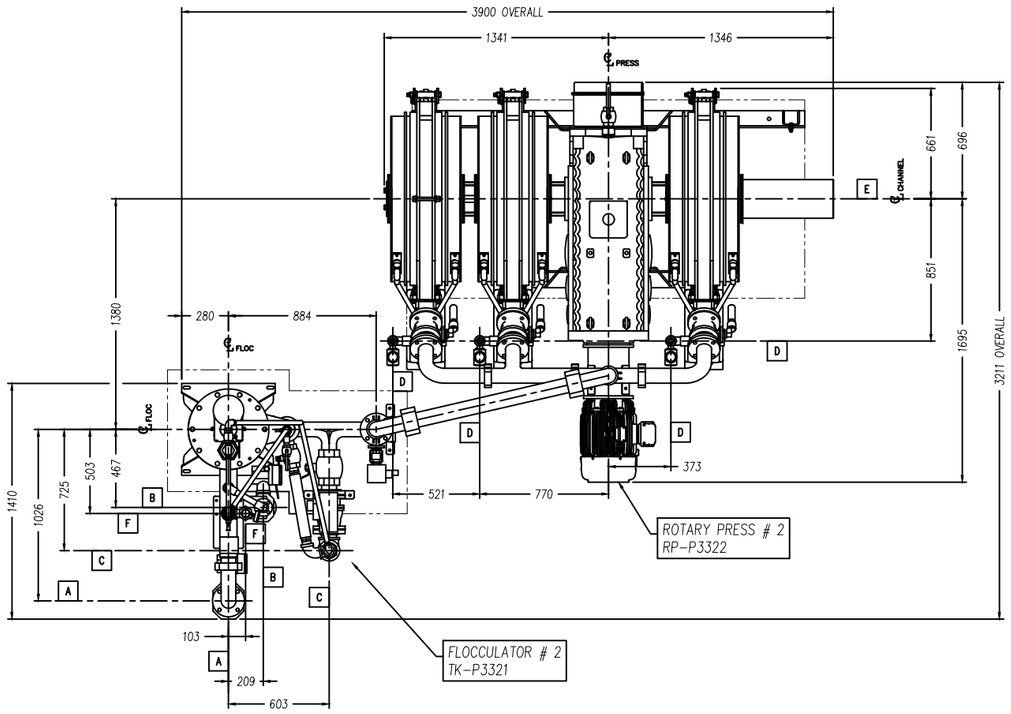

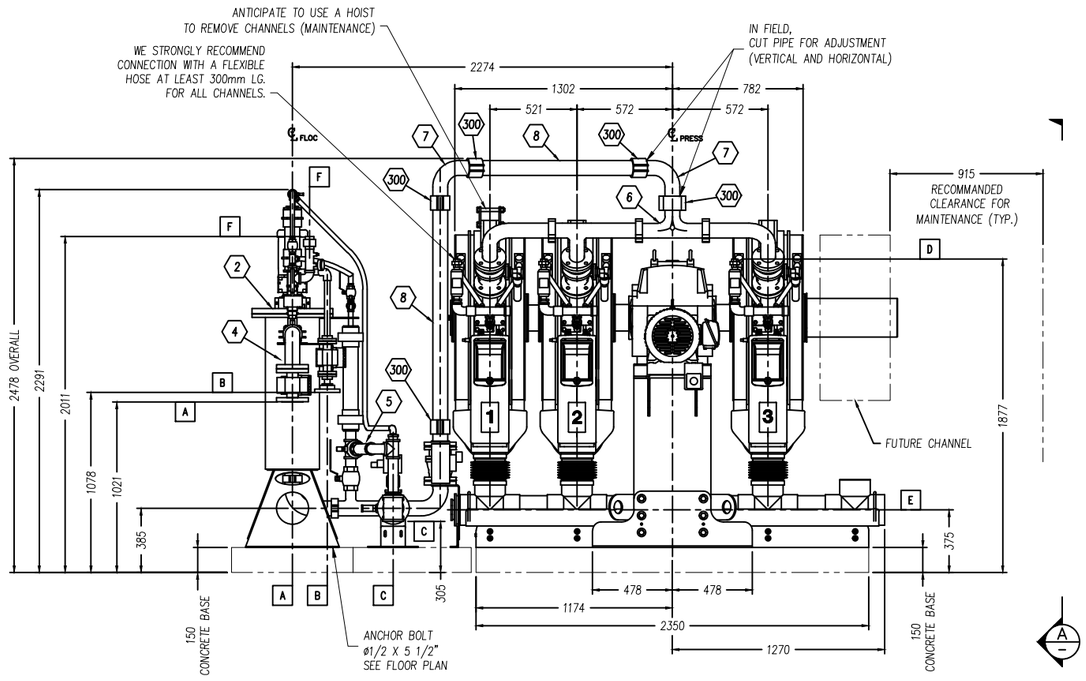

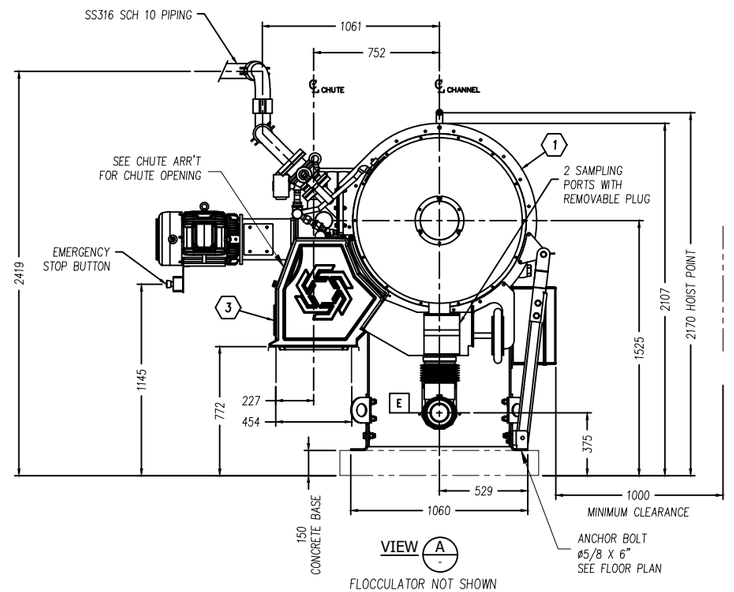

ARTICLE ITEM	REPÈRE REF.	NOMBRE QTY(1)	DÉSIGNATION / DESIGNATION	MATÉRIEL MATERIAL	POIDS(kg) WEIGHT UNIT.(1)	REMARQUES / NOTES - #1FI
1		1	ROTARY PRESS #2 EXPLODED VIEW	S.S.304L	4955	D-53375
			FLOOR PLAN			D-53388
			FLOW SHEET #2			D-53377
2		1	FLOCCULATOR #2 ASSEMBLY	STEEL	216	D-53379
3		3	CAKE CHUTE #2 ASSEMBLY	LLDPE	7	D-53385
4		1	FLOCCULATOR #2 INLET PIPING	S.S.316L	52	D-53381
5		1	FLOCCULATOR #2 OUTLET PIPING	S.S.316L	109	D-53383
6		1	MIDDLE MANIFOLD ø3"	S.S.316L	4	IFI-02314
7		2	ADJUSTING ELBOW 90°, ø3"	S.S.316L	3	IFI-01620
8		2	FEED PIPE ø3" X 80" (CUT TO SUIT)	S.S.316L	14	IFI-02464
300		5	RIGID UNION ø3", TYPE "ROUST-A-BOUT"	CAST IRON	4	VICTAULIC, STYLE 99 VI-99-3

INTERFACE BETWEEN PIPING OF ROTARY PRESS AND CUSTOMER PIPING

- A — SLUDGE INLET ø76.2mm(ø3") (FLANGE)
- B — POLYMER INLET ø50.8mm(ø2")-(FLANGE)
- C — SLUDGE RECIRCULATION OUTLET ø76.2mm(ø3")-NPT
- D — WASH WATER INLET ø25.4mm(ø1")-NPT (3 PLACES) (ROTARY PRESS)
- E — FILTRATE OUTLET ø152.4mm(ø6") PIPE
- F — WASH WATER INLET ø38.1mm(ø1 1/2")-NPT (FLOCCULATOR)

(1) LA QUANTITÉ EST DONNÉE POUR UN ASSEMBLAGE / QUANTITY GIVEN IS FOR ONE ASSEMBLY.
(2) LA QUANTITÉ EST DONNÉE POUR UN ASSEMBLAGE EXCLUANT LES ARTICLES MARQUÉS D'UN ASTÉRISQUE / QUANTITY GIVEN FOR ONE ASSEMBLY EXCLUDING ITEMS MARKED WITH AN ASTERISK.

PEINTURE(m2) PAINT SURFACE(2)	0	CAOUTCHOUC(m2) RUBBER SURFACE(2)	0	PL.USURE(kg) WEIGHT OF LINERS(2)	0	POIDS TOT.(kg) TOT. WEIGHT(2)	5415	REQUIS TOTAL TOTAL REQ'D	1

Grand./Size: D | Dessin No / Drawing No.: 53373 | Page/Sheet: 1 of 1 | Révision: 00

No Projet / Project No.: 2023-11911 | No Production / Job No.: 23-8457

LÉGENDE/LEGEND

1 @ 299 = ASSEMBLAGES FABRIQUÉS / FABRICATED ASSEMBLY
300 @ 499 = COMPOSANTES MÉCANIQUE / MECHANICAL COMPONENTS
500 @ 699 = BOULONNERIE / BOLTS

NOTES GÉNÉRALES/GENERAL NOTES

TOTAL WEIGHT: 11913 LBS (5415 Kg)

ESTIMATED SLUDGE WEIGHT: 671 LBS (305 Kg)

PIPING AND ACCESSORIES DESIGNED AND TESTED TO RESIST AT 103 kPa (15 PSI) HYDROSTATIC PRESSURE.

NOTES:
-NOISE LEVEL: NOT EXCEED 75 dBA MEASURED AT 3 FEET FROM THE SOURCE.
- Fournier Industries Paint Procedure # 3

Surface preparation:
Sand blasting according to SSPC-SP10 for the equipment.
Pickling SSPC-SP8 for the piping.

Primer:
Type: Epoxy resin (high-built)
Dry thickness: 6 mils minimum

Paint:
Type: Polyurethane
Dry thickness: 1.5 mils by layer (2 layers) = 3 mils minimum
Total thickness: 9 mils minimum
Color: Carbothane 134 HG Special Fournier Blue V111

NO.	REVISIONS	DATE DD-MM-YY	BY/PAR

THIRD ANGLE PROJECTION / PROJECTION TROISIEME ANGLE

SURFACE FINISH 125 — FINITION SURFACE

Tolérances sauf indications contraires/Tolerances unless otherwise stated
SYSTÈME IMPÉRIAL / IMPERIAL SYSTEM — SYSTÈME MÉTRIQUE / METRIC SYSTEM

	0 - 36"	36" +		0 - 1000mm	1000mm +
FRACTION	± 1/16"	± 1/8"	ENTIER / INTEGER	± 1 mm	± 2mm
2 PLACES .XX	± .010"		1 PLACES .X	± .50 mm	
3 PLACES .XXX	± .005"		2 PLACES .XX	± .25 mm	
ANGLES		± 1/2°	3 PLACES .XXX	± .125 mm	

Ébavurer les arêtes vives (S.I.C.)/Deburring sharp edges (U.O.S)

Weld inspection according CSA W59 section 11 except otherwise noted
VT: 100% PT: As per symbol
UT: As per symbol MT: As per symbol
Sealed welds: 100% LT (leak test)
Lifting lugs: 100% MT , 100%VT

Inspection des soudures selon CSA W59 section 11 sauf indication contraire
VT: 100% PT: Selon symbole
UT: Selon symbole MT: Selon symbole
Soudures étanches: 100% LT (essai d'étanchéité)
Anneaux de levage: 100% MT , 100%VT

THIS DRAWING AND ALL THE INFORMATION IT CONTAINS ARE THE EXCLUSIVE PROPERTY OF LES INDUSTRIES FOURNIER INC. IT IS STRICTLY FORBIDDEN TO COMMUNICATE OR USE THE INFORMATION AS IMPOSED, OTHER THAN THE PURPOSE FOR WHICH IT WAS GIVEN, WITHOUT THE PRIOR WRITTEN CONSENT OF LES INDUSTRIES FOURNIER INC. THIS DRAWING IN WHOLE OR IN PART MAY NOT BE REPRODUCED IN ANY FASHION AND HAS TO BE RETURNED TO LES INDUSTRIES FOURNIER INC. UPON REQUEST.

CE DESSIN ET TOUTES LES INFORMATIONS QU'IL CONTIENT SONT LA PROPRIÉTÉ EXCLUSIVE DE LES INDUSTRIES FOURNIER INC. IL EST STRICTEMENT INTERDIT DE COMMUNIQUER OU UTILISER SON CONTENU À D'AUTRES FINS QUE CELLES PRÉVUES CI-SEULEMENT OU POUVANT ÊTRE PRÉJUDICIABLES AUX INTÉRÊTS DE LES INDUSTRIES FOURNIER INC. TOUTE REPRODUCTION DE CE DESSIN EST INTERDITE ET IL DOIT ÊTRE RETOURNÉ SUR DEMANDE.

Lire conjointement avec PRIE approuvé / Read in conjunction with the approved ITP

Par	Date (DD/MM/YY)	MONT	ELEC							
ETAPES		1	2	3	4	5	6	7	8	9

23-8457

FOURNIER INDUSTRIES INC.
LES INDUSTRIES FOURNIER INC.
3787 BOUL. FRONTENAC, THETFORD-MINES
QUEBEC, CANADA, G6H-2B5

WINNIPEG, MB
DEWATERING SYSTEM
ROTARY PRESS ø900mm
GENERAL ARRANGEMENT ROTARY PRESS # 2
MODEL 3(4)-900/4000CVP-SS304

Dessiné / Drawn	Vérifié / Checked	Approuvé / Approved	No IFI / IFI No.
M.BERNIER	E.GAMACHE	D. CLICHE	
Date: 28-06-2023	Echelle / Scale: 1:16	No Equipement / Item / Article / Item No.: RP-P3322 & TK-P3321	

Grand./Size: D | Dessin No / Drawing No.: 53373 | Page/Sheet: 1 of 1 | Révision: 00

FQF084 (06-2017)

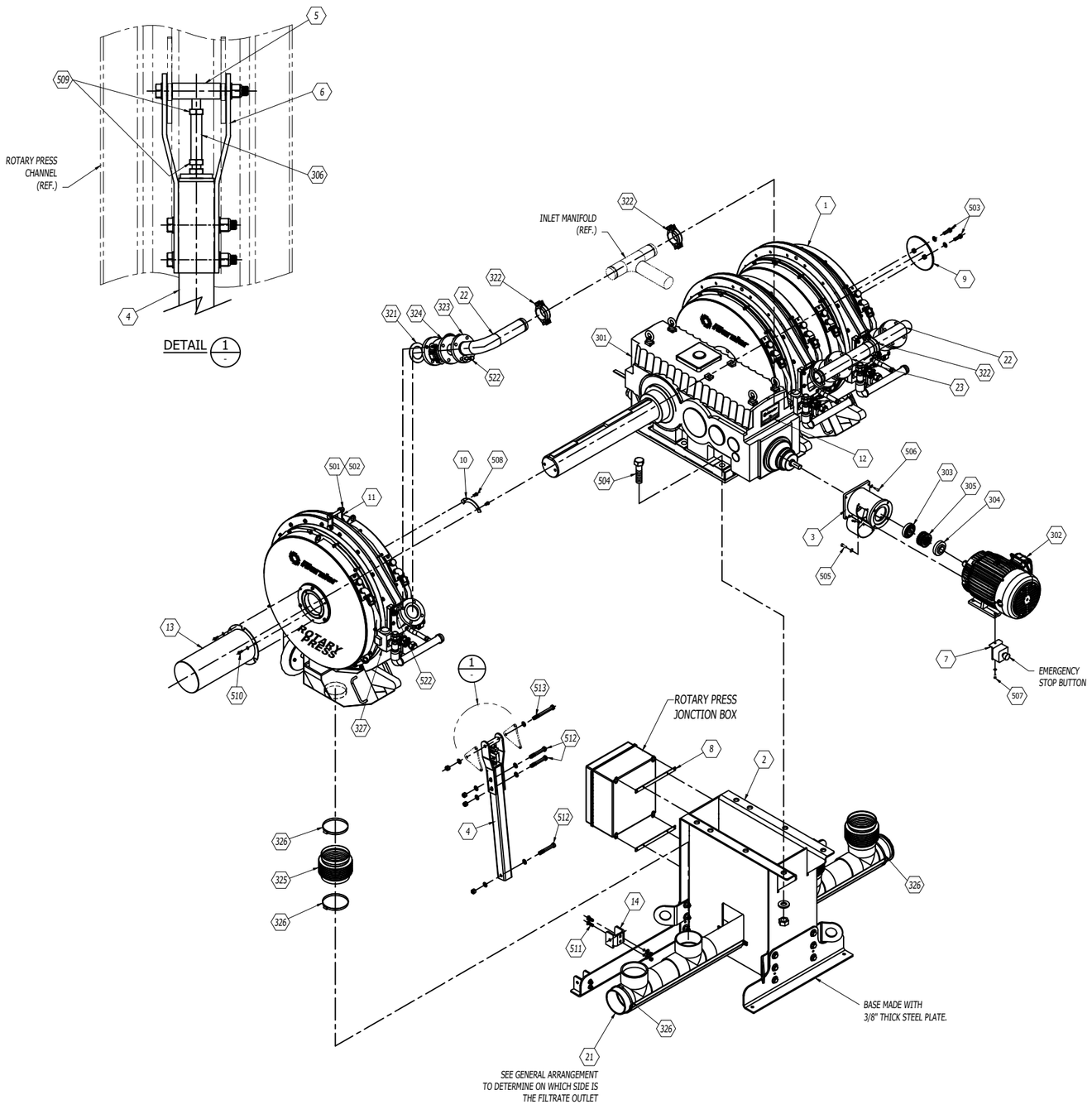

ARTICLE ITEM	REPÈRE REF.	NOMBRE QTY(1)	DÉSIGNATION / DESIGNATION	MATÉRIEL MATERIAL	POIDS(kg) WEIGHT UNIT.(1)	REMARQUES / NOTES - #1FI
1		3	CONCENTRIC MODULE MODEL #1-900/1000CVP - SS304L			1FI-02552
2		1	REDUCER BASE	STEEL		
3		1	BELL HOUSING 254TC VS M5RSF60	STEEL		
4		3	LOWER LOADCELL MOUNTING	STEEL		
5		3	UPPER LOADCELL MOUNTING	S.S.316L		
6		3	LOADCELL PROTECTOR	STEEL		
7		1	EMERGENCY STOP BUTTON SUPPORT	S.S.304L		1FI-02112
8		2	JONCTION BOX SUPPORT	S.S.304L		1FI-02123
9		1	CAP PLATE	S.S.316L		53374-9
10		2	KEY LOCK	S.S.316L		1FI-02537
11		2	LIFTING DEVICE	S.S.316L		1FI-01856
12		1	ROTARY PRESS NAME PLATE	ALUMINUM		
13		1	SPEED REDUCER GUARD	S.S.304L		
14		4	ANTI-ROTATION ARM SUPPORT	S.S.304L		1FI-02440
301		1	SPEED REDUCER, RATIO 1560:1			SEW EURODRIVE #M5RSF60
302		1	ELEC. MOTOR 15 HP, 1800 RPM, 575/3/60 Hz,			TECO-WESTINGHOUSE PDH0154C
			254TC, TEFC, CLASS "F" INSULATION - C-FLANGE			
303		1	HALF COUPLING, BORE Ø30mm, KEYWAY 8mm x 3.3mm	CAST IRON		MARTIN #6S x Ø30mm
304		1	HALF COUPLING, Ø1 5/8", KEYWAY 3/8"x 3/16"	CAST IRON		MARTIN #6S x Ø1 5/8"
305		1	SLEEVE, TYPE H	HYTREL		MARTIN #6H
306		3	LOADCELL 0-5000 LBS	NICKEL PLATED		ANYLOAD #101NH-5KLB
501		2	HEX. BOLT M20 x 2.5 - 150mm LG	S.S.316L		
502		2	HEX. NUT M20 x 2.5 NYLON INSERT	S.S.316L		
503		2	HEX. BOLT M16 x 2 - 50mm LG	S.S.316L		C/W FLAT WASHER
504		8	HEX. BOLT M30 x 3.5 - 140mm LG	ZINC PLATED		C/W 1 HN, 1 FW
505		4	HEX. BOLT 1/2"-13NC - 1 1/4" LG	S.S.316L		C/W 1 LOCK WASHER
506		4	HEX. BOLT M12 x 1.75 - 40mm LG	S.S.316L		C/W 1 FLAT WASHER
507		1	HEX. BOLT M10 x 1.5 - 25mm LG	S.S.316L		C/W 1 HN, 1 FW
508		4	SOCKET HEAD CAP SCREW M16 x 2 - 25mm LG	S.S.316L		
509		6	THIN HEX. NUT 3/4"-16NF	S.S.316L		
510		3	HEX. BOLT M10 x 1.5 - 25mm LG	S.S.316L		C/W 1 LOCK WASHER
511		8	CARRIAGE BOLT 1/2-13nc - 1 3/4" LG	S.S.316L		C/W 1 NYLON NUT & 1 FW
512		9	HEX. BOLT 3/4"-10NC - 5 1/2" LG	S.S.316L		C/W 1 NYLON NUT & 2 FW
513		3	HEX. BOLT 3/4"-10NC - 7 1/2" LG	S.S.316L		C/W 1 NYLON NUT & 2 FW
			PIPING PARTS			
21		1	FILTRATE MANIFOLD Ø152.4mm [Ø6"]	PVC		53374-21
22		2	ELBOW INLET MANIFOLD Ø76.2mm [Ø3"]	S.S.316L		1FI-01917
23		1	TEE INLET MANIFOLD Ø76.2mm [Ø3"]	S.S.316L		1FI-01871
321		3	GASKET FOR FLANGE Ø76.2mm [Ø3"]	SBR		1FI-01722
322		3	FLEXIBLE COUPLING Ø76.2mm [Ø3"]			VICTAULIC STYLE 77
323		3	FLANGE, CLASS 150# Ø76.2mm [Ø3"]			VICTAULIC STYLE 741
324		3	BALL VALVE FULL PORT FLANGE Ø76.2mm [Ø3"]	CAST IRON		1FI-02077-2017
325		3	ROUND BELLOWS	RUBBER		1FI-02559
326		8	Ø145mm TO Ø195mm HOSE CLAMP	S.S.316L		TRIDON #HAS-128
327		3	PNEUMATIC VALVE Ø25.4mm [Ø1"]	S.S.		FESTO #13117333
522		24	HEX. BOLT 5/8"-11NC x 3" LG.	S.S.316L		C/W 1 HN, 2 FW

ROTARY PRESS #1
RP-P3312

- CONCENTRIC MODULE WEIGHT: 818 Kg (1800 lbs) / MODULE
- REDUCER WEIGHT: 1795 Kg. (3950 lbs) WITH 22 GALLONS OF OIL
- BASE WEIGHT: 312 Kg. (686 lbs)
- INLET MANIFOLD PIPING WEIGHT: 85 Kg. (187 lbs)

(1) LA QUANTITÉ EST DONNÉE POUR UN ASSEMBLAGE / QUANTITY GIVEN IS FOR ONE ASSEMBLY.
(2) LA QUANTITÉ EST DONNÉE POUR UN ASSEMBLAGE EXCLUANT LES ARTICLES MARQUÉS D'UN ASTÉRISQUE / QUANTITY GIVEN FOR ONE ASSEMBLY EXCLUDING ITEMS MARKED WITH AN ASTERISK.

PEINTURE(m2) PAINT SURFACE(2)	0	CAOUTCHOUC(m2) RUBBER SURFACE(2)	0	PL.USURE(kg) WEIGHT OF LINERS(2)	0	POIDS TOT.(kg) TOT. WEIGHT(2)	4955	REQUIS TOTAL TOTAL REQ'D	1

Grand./Size: D | Dessin No / Drawing No.: 53374 | Page/Sheet: 1 of 1 | Revision: 00

No Projet / Project No.: 2023-11911 | No Production / Job No.: 23-8456

LÉGENDE/LEGEND
1 @ 299 = ASSEMBLAGES FABRIQUÉS / FABRICATED ASSEMBLY
300 @ 499 = COMPOSANTES MÉCANIQUE / MECHANICAL COMPONENTS
500 @ 699 = BOULONNERIE / BOLTS

NOTES GÉNÉRALES/GENERAL NOTES

-NOISE LEVEL: NOT EXCEED 75 dBA MEASURED AT 3 FEET FROM THE SOURCE.

- Fournier Industries Paint Procedure # 3

Surface preparation:
Sand blasting according to SSPC-SP10 for the equipment.
Pickling SSPC-SP8 for the piping.

Primer:
Type: Epoxy resin (high-built)
Dry thickness: 6 mls minimum

Paint:
Type: Polyurethane
Dry thickness: 1.5 mls by layer (2 layers) = 3 mls minimum
Total thickness: 9 mls minimum
Color: Carbothane 134 HG Special Fournier Blue V111

NO.	REVISIONS	DATE DD-MM-YY	BY/PAR

THIRD ANGLE PROJECTION / PROJECTION TROISIEME ANGLE

SURFACE FINISH / FINITION SURFACE
Tolérances sauf indications contraires/Tolerances unless otherwise stated
SYSTÈME IMPÉRIAL / IMPERIAL SYSTEM: FRACTION ± 1/16", 2 PLACES .XX ± .010", 3 PLACES .XXX ± .005", ANGLES ± 1/2°; 0 - 36": ± 1/8", ENTIER / INTEGER; 36" +: ± 1 mm, 1 PLACES .X, 2 PLACES .XX, 3 PLACES .XXX
SYSTÈME MÉTRIQUE / METRIC SYSTEM: 0 - 1000mm ± .50 mm, ± .25 mm, ± .125 mm; 1000mm + ± 2mm
Ébavurer les arêtes vives (S.I.C.)/Deburring sharp edges (U.O.S)

Weld inspection according CSA W59 section 11 except otherwise noted
VT: 100% PT: As per symbol
UT: As per symbol MT: As per symbol
Sealed welds: 100% LT (leak test)
Lifting lugs: 100% MT , 100%VT

Inspection des soudures selon CSA W59 section 11 sauf indication contraire
VT: 100% PT: Selon symbole
UT: Selon symbole MT: Selon symbole
Soudures étanches: 100% LT (essai d'étanchéité)
Anneaux de levage: 100% MT , 100%VT

THIS DRAWING AND ALL THE INFORMATION IT CONTAINS ARE THE EXCLUSIVE PROPERTY OF LES INDUSTRIES FOURNIER INC. IT IS STRICTLY FORBIDDEN TO COMMUNICATE OR USE THE INFORMATION FOR PURPOSES OTHER THAN THE ORIGINAL INTENDED ONES OR BY THE USE COULD BE HARMFUL TO THE INTERESTS OF LES INDUSTRIES FOURNIER INC. THIS DRAWING OR IMAGE OR IN PART MAY NOT BE REPRODUCED IN ANY FASHION AND HAS TO BE RETURNED TO LES INDUSTRIES FOURNIER INC. UPON REQUEST.

CE DESSIN ET TOUTES LES INFORMATIONS QUI L'ONT CONTIENT SONT LA PROPRIÉTÉ EXCLUSIVE DE LES INDUSTRIES FOURNIER INC. IL EST STRICTEMENT INTERDIT DE COMMUNIQUER OU UTILISER SON CONTENU À D'AUTRES FINS QUE CELLES PRÉVUES ORIGINALEMENT OU PAR L'UTILISATION QUI POURRAIT NUIRE AUX INTÉRÊTS DE LES INDUSTRIES FOURNIER INC. TOUTE REPRODUCTION DE CE DESSIN EST INTERDITE ET IL DOIT ÊTRE RETOURNÉ SUR DEMANDE.

Lire conjointement avec PRIE approuvé / Read in conjunction with the approved ITP

Par	Date (DD/MM/YY)	MONT	ELEC							
ETAPES		1	2	3	4	5	6	7	8	9

23-8456

FOURNIER INDUSTRIES INC.
LES INDUSTRIES FOURNIER INC.
3787 BOUL. FRONTENAC, THETFORD-MINES
QUEBEC, CANADA, G6H-2B5

WINNIPEG, MB
DEWATERING SYSTEM
ROTARY PRESS Ø900mm
ROTARY PRESS #1 RP-P3312 - EXPLODED VIEW
MODEL 3(4)-900/4000CVP - SS304L

Dessiné / Drawn	Vérifié / Checked	Approuvé / Approved	No 1FI / 1FI No.
S. LEBEL	E. GAMACHE	D. CLICHE	
Date: 27/06/2023	Echelle / Scale: 1:15	No Équipement du Client / Customer Equipment No.: RP-P3312	

Grand./Size: D | Dessin No / Drawing No.: 53374 | Page/Sheet: 1 of 1 | Revision: 00

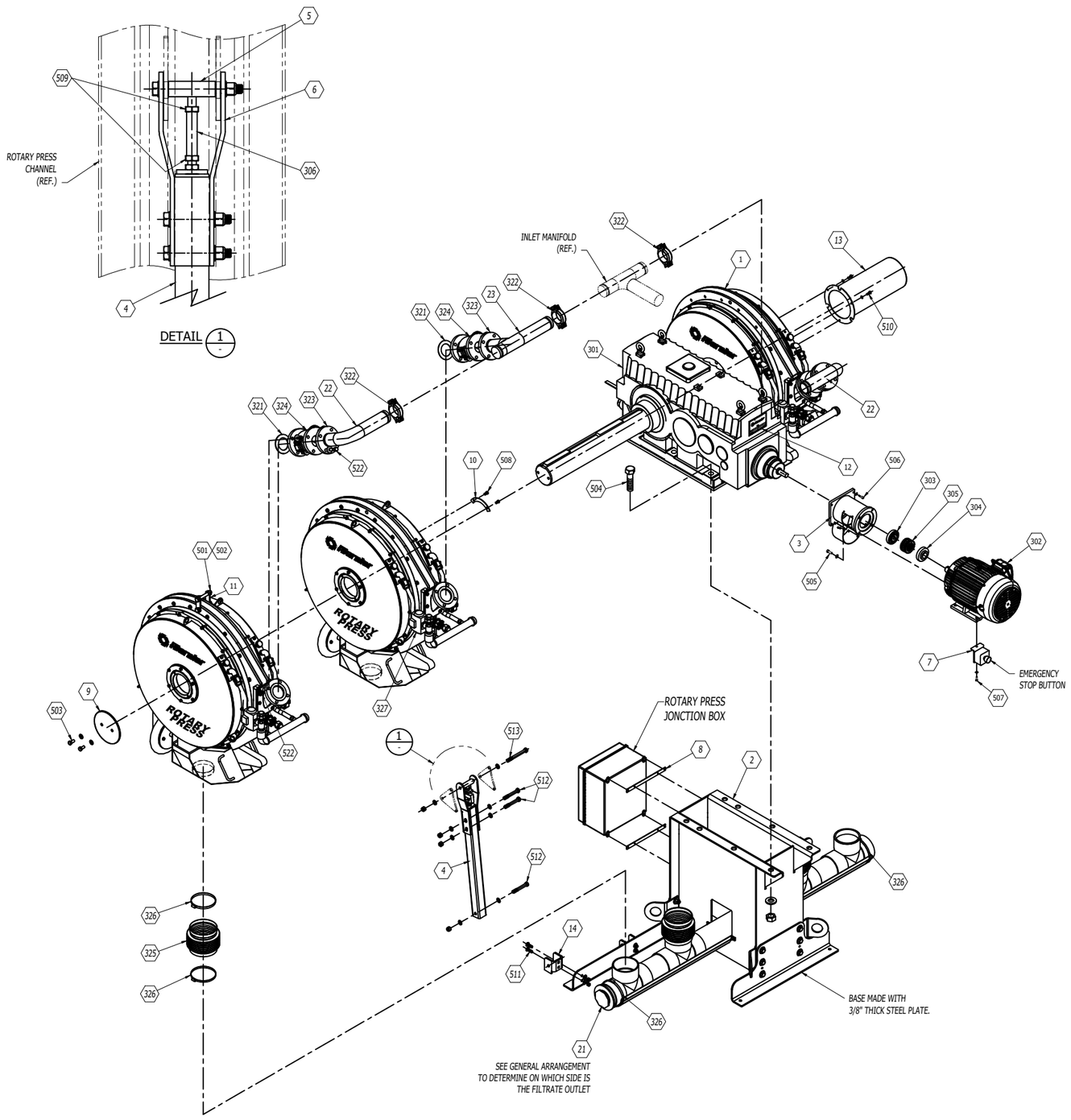

- CONCENTRIC MODULE WEIGHT: 818 Kg (1800 lbs) / MODULE
- REDUCER WEIGHT: 1795 Kg. (3950 lbs) WITH 22 GALLONS OF OIL
- BASE WEIGHT: 312 Kg. (686 lbs)
- INLET MANIFOLD PIPING WEIGHT: 85 Kg. (187 lbs)

ARTICLE ITEM	REPÈRE REF.	NOMBRE QTY(1)	DÉSIGNATION / DESIGNATION	MATÉRIEL MATERIAL	POIDS(kg) WEIGHT UNIT.(1)	REMARQUES / NOTES - #1FI
1		3	CONCENTRIC MODULE MODEL #1-900/1000CVP - SS304L			1FI-02552
2		1	REDUCER BASE	STEEL		
3		1	BELL HOUSING 254TC VS M5RSF60	STEEL		
4		3	LOWER LOADCELL MOUNTING	STEEL		
5		3	UPPER LOADCELL MOUNTING	S.S.316L		
6		3	LOADCELL PROTECTOR	STEEL		
7		1	EMERGENCY STOP BUTTON SUPPORT	S.S.304L		1FI-02112
8		2	JONCTION BOX SUPPORT	S.S.304L		1FI-02123
9		1	CAP PLATE	S.S.316L		53375-9
10		2	KEY LOCK	S.S.316L		1FI-02537
11		2	LIFTING DEVICE	S.S.316L		1FI-01856
12		1	ROTARY PRESS NAME PLATE	ALUMINUM		
13		1	SPEED REDUCER GUARD	S.S.304L		
14		4	ANTI-ROTATION ARM SUPPORT	S.S.304L		1FI-02440
301		1	SPEED REDUCER, RATIO 1560:1			SEW EURODRIVE #M5RSF60
302		1	ELEC. MOTOR 15 HP, 1800 RPM, 575/3/60 Hz,			TECO-WESTINGHOUSE PDH0154C
			254TC, TEFC, CLASS "F" INSULATION - C-FLANGE			
303		1	HALF COUPLING, BORE Ø30mm, KEYWAY 8mm x 3.3mm	CAST IRON		MARTIN #6S x Ø30mm
304		1	HALF COUPLING, Ø1 5/8", KEYWAY 3/8"x 3/16"	CAST IRON		MARTIN #6S x Ø1 5/8"
305		1	SLEEVE, TYPE H	HYTREL		MARTIN #6H
306		3	LOADCELL 0-5000 LBS	NICKEL PLATED		ANYLOAD #101NH-5KLB
501		2	HEX. BOLT M20 x 2.5 - 150mm LG	S.S.316L		
502		2	HEX. NUT M20 x 2.5 NYLON INSERT	S.S.316L		
503		2	HEX. BOLT M16 x 2 - 50mm LG	S.S.316L		C/W FLAT WASHER
504		8	HEX. BOLT M30 x 3.5 - 140mm LG	ZINC PLATED		C/W 1 HN, 1 FW
505		4	HEX. BOLT 1/2"-13NC - 1 1/4" LG	S.S.316L		C/W 1 LOCK WASHER
506		4	HEX. BOLT M12 x 1.75 - 40mm LG	S.S.316L		C/W 1 FLAT WASHER
507		1	HEX. BOLT M10 x 1.5 - 25mm LG	S.S.316L		C/W 1 HN, 1 FW
508		4	SOCKET HEAD CAP SCREW M16 x 2 - 25mm LG	S.S.316L		
509		6	THIN HEX. NUT 3/4"-16NF	S.S.316L		
510		3	HEX. BOLT M10 x 1.5 - 25mm LG	S.S.316L		C/W 1 LOCK WASHER
511		8	CARRIAGE BOLT 1/2-13nc - 1 3/4" LG	S.S.316L		C/W 1 NYLON NUT & 1 FW
512		9	HEX. BOLT 3/4"-10NC - 5 1/2" LG	S.S.316L		C/W 1 NYLON NUT & 2 FW
513		3	HEX. BOLT 3/4"-10NC - 7 1/2" LG	S.S.316L		C/W 1 NYLON NUT & 2 FW
			PIPING PARTS			
21		1	FILTRATE MANIFOLD Ø152.4mm [Ø6"]	PVC		53375-21
22		2	ELBOW INLET MANIFOLD Ø76.2mm [Ø3"]	S.S.316L		1FI-01917
23		1	TEE INLET MANIFOLD Ø76.2mm [Ø3"]	S.S.316L		1FI-01871
321		3	GASKET FOR FLANGE Ø76.2mm [Ø3"]	SBR		1FI-01722
322		3	FLEXIBLE COUPLING Ø76.2mm [Ø3"]			VICTAULIC STYLE 77
323		3	FLANGE, CLASS 150# Ø76.2mm [Ø3"]			VICTAULIC STYLE 741
324		3	BALL VALVE FULL PORT FLANGE Ø76.2mm [Ø3"]	CAST IRON		1FI-02077-2017
325		3	ROUND BELLOWS	RUBBER		1FI-02559
326		8	Ø145mm TO Ø195mm HOSE CLAMP	S.S.316L		TRIDON #HAS-128
327		3	PNEUMATIC VALVE Ø25.4mm [Ø1"]	S.S.		FESTO #13117333
522		24	HEX. BOLT 5/8"-11NC x 3" LG.	S.S.316L		C/W 1 HN, 2 FW

(1) LA QUANTITÉ EST DONNÉE POUR UN ASSEMBLAGE / QUANTITY GIVEN IS FOR ONE ASSEMBLY.
(2) LA QUANTITÉ EST DONNÉE POUR UN ASSEMBLAGE EXCLUANT LES ARTICLES MARQUÉS D'UN ASTÉRISQUE / QUANTITY GIVEN FOR ONE ASSEMBLY EXCLUDING ITEMS MARKED WITH AN ASTERISK.

PEINTURE(m2) PAINT SURFACE(2)	0	CAOUTCHOUC(m2) RUBBER SURFACE(2)	0	PL.USURE(kg) WEIGHT OF LINERS(2)	0	POIDS TOT.(kg) TOT. WEIGHT(2)	4955	REQUIS TOTAL TOTAL REQ'D	1

ROTARY PRESS #2
RP-P3322

Grand./Size: D | Dessin No / Drawing No.: 53375 | Page/Sheet: 1 of 1 | Révision: 00

No Projet / Project No.: 2023-11911 | No Production / Job No.: 23-8457

LÉGENDE/LEGEND
1 @ 299 = ASSEMBLAGES FABRIQUÉS / FABRICATED ASSEMBLY
300 @ 499 = COMPOSANTES MÉCANIQUE / MECHANICAL COMPONENTS
500 @ 699 = BOULONNERIE / BOLTS

NOTES GÉNÉRALES/GENERAL NOTES

-NOISE LEVEL: NOT EXCEED 75 dBA MEASURED AT 3 FEET FROM THE SOURCE.

- Fournier Industries Paint Procedure # 3

Surface preparation:
Sand blasting according to SSPC-SP10 for the equipment.
Pickling SSPC-SP8 for the piping.

Primer:
Type: Epoxy resin (high-built)
Dry thickness: 6 mls minimum

Paint:
Type: Polyurethane
Dry thickness: 1.5 mls by layer (2 layers) = 3 mls minimum
Total thickness: 9 mls minimum
Color: Carbothane 134 HG Special Fournier Blue V111

NO.	REVISIONS	DATE (DD-MM-YY)	BY/PAR

THIRD ANGLE PROJECTION / PROJECTION TROISIEME ANGLE

SURFACE FINISH 125 FINITION SURFACE

Tolérances sauf indications contraires/Tolerances unless otherwise stated
SYSTÈME IMPÉRIAL / IMPERIAL SYSTEM — SYSTÈME MÉTRIQUE / METRIC SYSTEM

FRACTION	0 - 36"	36" +	DECIMAL	0 - 1000mm	1000mm +
2 PLACES .XX	± 1/16"	± 1/8"	ENTIER / INTEGER	± 1 mm	± 2mm
3 PLACES .XXX	± .010"		1 PLACES .X	± .50 mm	
ANGLES	± .005"		2 PLACES .XX	± .25 mm	
		± 1/2"	3 PLACES .XXX	± .125 mm	

Ébavurer les arêtes vives (S.I.C.)/Deburring sharp edges (U.O.S)

Weld inspection according CSA W59 section 11 except otherwise noted
VT: 100% PT: As per symbol
UT: As per symbol MT: As per symbol
Sealed welds: 100% LT (leak test)
Lifting lugs: 100% MT , 100%VT

Inspection des soudures selon CSA W59 section 11 sauf indication contraire
VT: 100% PT: Selon symbole
UT: Selon symbole MT: Selon symbole
Soudures étanches: 100% LT (essai d'étanchéité)
Anneaux de levage: 100% MT , 100%VT

THIS DRAWING AND ALL THE INFORMATION IT CONTAINS ARE THE EXCLUSIVE PROPERTY OF LES INDUSTRIES FOURNIER INC. IT IS STRICTLY FORBIDDEN TO COMMUNICATE OR USE THE INFORMATION FOR PURPOSES OTHER THAN THE ORIGINAL INTENDED ONES OR IF THE USE COULD BE HARMFUL TO THE INTERESTS OF LES INDUSTRIES FOURNIER INC. THIS DRAWING IN WHOLE OR IN PART MAY NOT BE REPRODUCED IN ANY FASHION AND HAS TO BE RETURNED TO LES INDUSTRIES FOURNIER INC. UPON REQUEST.

CE DESSIN ET TOUTES LES INFORMATIONS QUIL CONTIENT SONT LA PROPRIETE EXCLUSIVE DE LES INDUSTRIES FOURNIER INC. IL EST STRICTEMENT INTERDIT DE COMMUNIQUER OU UTILISER SON CONTENU A D'AUTRES FINS QUE CELLES PREVUES ORIGINALEMENT OU POUVANT ETRE PREJUDICIABLES AUX INTERETS DE LES INDUSTRIES FOURNIER INC. TOUTE REPRODUCTION DE CE DESSIN EST INTERDITE ET IL DOIT ETRE RETOURNE SUR DEMANDE.

Lire conjointement avec PRIE approuvé / Read in conjunction with the approved ITP

Par	Date (DD/MM/YY)	MONT	ELEC							
ETAPES		1	2	3	4	5	6	7	8	9

23-8457

FOURNIER INDUSTRIES INC.
LES INDUSTRIES FOURNIER INC.
3787 BOUL. FRONTENAC, THETFORD-MINES
QUEBEC, CANADA, G6H-2B5

WINNIPEG, MB
DEWATERING SYSTEM
ROTARY PRESS Ø900mm
ROTARY PRESS #2 RP-P3322 - EXPLODED VIEW
MODEL 3(4)-900/4000CVP - SS304L

Dessiné / Drawn	Vérifié / Checked	Approuvé / Approved	No IFI / IFI No.
S. LEBEL	E. GAMACHE	D. CLICHE	
Date: 27/06/2023	Echelle / Scale: 1:15	No Équipement du Client / Customer Equipment No.: RP-P3322	

Grand./Size: D | Dessin No / Drawing No.: 53375 | Page/Sheet: 1 of 1 | Révision: 00

FQF84 (06-2017)

INTERFACE BETWEEN PIPING OF ROTARY PRESS AND CUSTOMER PIPING

A	SLUDGE INLET ø76.2mm(ø3") FLANGE
B	POLYMER INLET ø50.8mm(ø2") FLANGE
C	SLUDGE RECIRCULATION OUTLET ø76.2mm(ø3")-NPT
D	WASH WATER INLET ø25.4mm(ø1")-NPT (3 PLACES) (ROTARY PRESS)
E	FILTRATE OUTLET ø152.4mm(ø6") PIPE
F	WASH WATER INLET ø38.1mm(ø1 1/2")-NPT (FLOCCULATOR)
G	JUNCTION BOX AIR INLET ø6mm(ø1/4")-NPT
H	JUNCTION BOX AIR OUTLET ø6mm(ø1/4")-(PLASTIC TUBING)
J	AIR INLET FOR VALVE WITH ACTUATOR ø6mm(ø1/4")-(PLASTIC TUBING)
K	WATER INLET POLYMER SYSTEM ø12.7mm(ø1/2")- NPT/F
L	NEAT POLYMER INLET ø12.7mm(ø1/2")-NPT/F
M	MIXED POLYMER OUTLET ø50.8(ø2") FLANGE, CLASS 150#

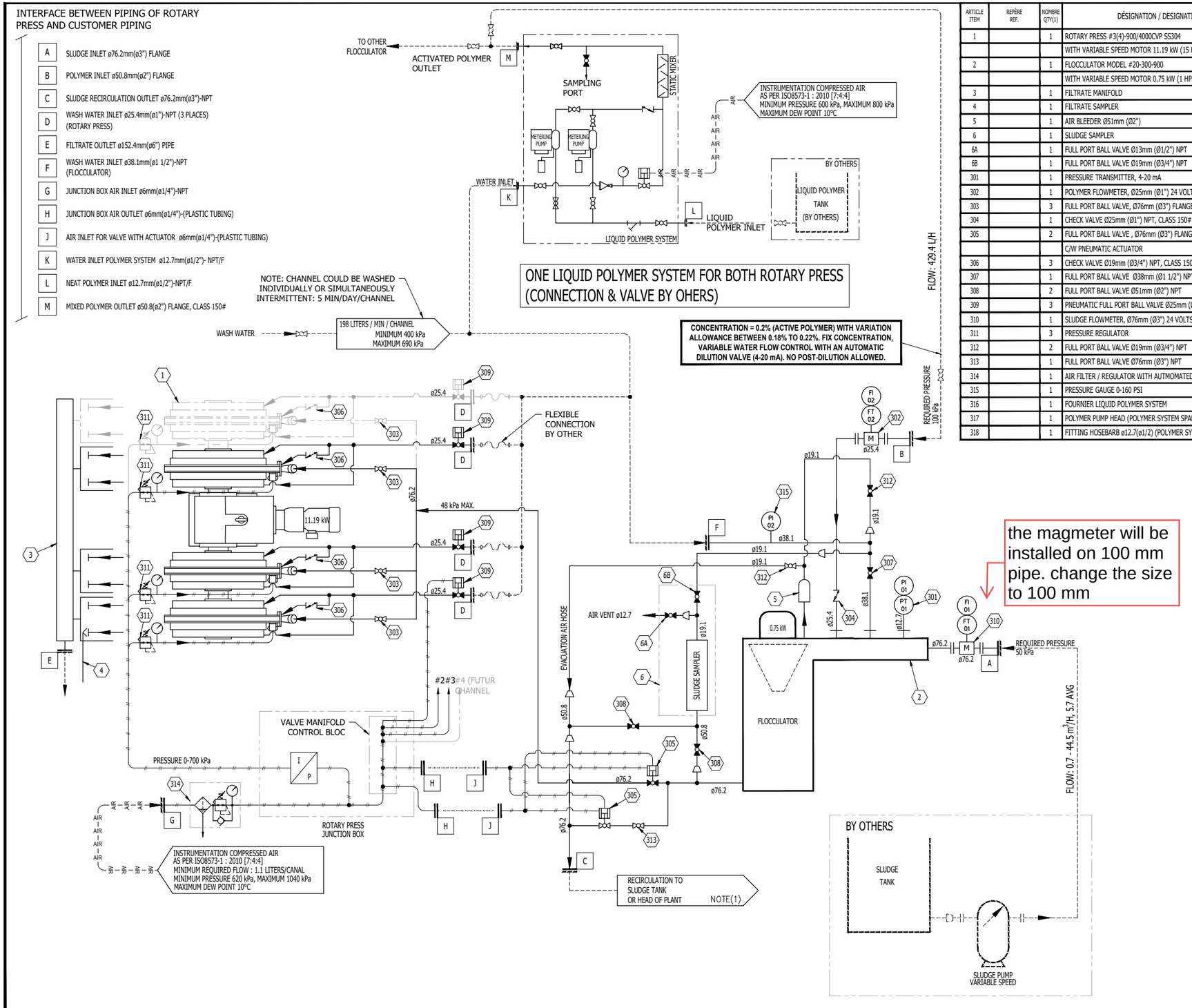

ARTICLE ITEM	REPÈRE REF.	NOMBRE QTY(1)	DÉSIGNATION / DESIGNATION	MATÉRIEL MATERIAL	POIDS(kg) WEIGHT UNIT.(1)	REMARQUES / NOTES - #IFI
1		1	ROTARY PRESS #3(4)-900/4000CVP SS304			
			WITH VARIABLE SPEED MOTOR 11.19 kW (15 HP)			
2		1	FLOCCULATOR MODEL #20-300-900			
			WITH VARIABLE SPEED MOTOR 0.75 kW (1 HP)			
3		1	FILTRATE MANIFOLD	PVC		
4		1	FILTRATE SAMPLER			IFI-01903
5		1	AIR BLEEDER Ø51mm (Ø2")	PVC		IFI-01719
6		1	SLUDGE SAMPLER			IFI-01522
6A		1	FULL PORT BALL VALVE Ø13mm (Ø1/2") NPT	S.S.		C.F.F. MODEL 1/2" SS-2
6B		1	FULL PORT BALL VALVE Ø19mm (Ø3/4") NPT	S.S.		C.F.F. MODEL 3/4" SS-2
301		1	PRESSURE TRANSMITTER, 4-20 mA	S.S.		E&H CERABAR S PMC71B
302		1	POLYMER FLOWMETER, Ø25mm (Ø1") 24 VOLTS			E&H MODEL #5WB825-24V
303		3	FULL PORT BALL VALVE, Ø76mm (Ø3") FLANGED	CAST IRON		AMERICAN VALVE 4000
304		1	CHECK VALVE Ø25mm (Ø1") NPT, CLASS 150#			IFC #1"SC6000TSSSSM
305		2	FULL PORT BALL VALVE , Ø76mm (Ø3") FLANGED	CAST IRON		AMERICAN VALVE 4000
			C/W PNEUMATIC ACTUATOR			FESTO 13117330, 13117331
306		3	CHECK VALVE Ø19mm (Ø3/4") NPT, CLASS 150#			IFC #3/4"SC6000TSSSSM
307		1	FULL PORT BALL VALVE Ø38mm (Ø1 1/2") NPT	S.S.		C.F.F. MODEL 1 1/2" SS-2
308		2	FULL PORT BALL VALVE Ø51mm (Ø2") NPT	S.S.		C.F.F. MODEL 2" SS-2
309		3	PNEUMATIC FULL PORT BALL VALVE Ø25mm (Ø1")	S.S.		FESTO #13117333
310		1	SLUDGE FLOWMETER, Ø76mm (Ø3") 24 VOLTS			E&H MODEL #5WB880-24V
311		3	PRESSURE REGULATOR			FESTO VPPE
312		2	FULL PORT BALL VALVE Ø19mm (Ø3/4") NPT	S.S.		C.F.F. MODEL 3/4" SS-2
313		1	FULL PORT BALL VALVE Ø76mm (Ø3") NPT	S.S.		C.F.F. MODEL 3" SS-2
314		1	AIR FILTER / REGULATOR WITH AUTMOMATED DRAIN			FESTO 527694
315		1	PRESSURE GAUGE 0-160 PSI	S.S.		ROYAL #SSG-2502-160
316		1	FOURNIER LIQUID POLYMER SYSTEM			POLYSYS-1/2-120V
317		1	POLYMER PUMP HEAD (POLYMER SYSTEM SPARE)			WM-RENU30
318		1	FITTING HOSEBARB ø12.7(ø1/2) (POLYMER SYSTEM SPARE)			INT-OM9.401H.P05

NOTES GÉNÉRALES/GENERAL NOTES

NOTE (1):THIS LINE SHALL BE DRAINED BY GRAVITY TO ALLOW THE DRAINAGE OF THE SLUDGE SAMPLER.

-SCHEDULE 80 PVC FOR POLYMER PIPING
-SCHEDULE 10 SS FOR SLUDGE PIPING

- : PIPING SUPPLY BY OTHERS.
- : AIR TUBE SUPPLY AND INSTALLED BY FOURNIER.
- : AIR TUBE SUPPLY & INSTALLED BY OTHER.
- : AIR TUBE SUPPLY BY FOURNIER INSTALLED BY OTHER.

LEGEND
FI: FLOW INDICATOR
FT: FLOW TRANSMITTER
PI: PRESSURE INDICATOR
PT: PRESSURE TRANSMITTER
PS: PRESSURE SWITCH

(1) LA QUANTITÉ EST DONNÉE POUR UN ASSEMBLAGE / QUANTITY GIVEN IS FOR ONE ASSEMBLY.
(2) LA QUANTITÉ EST DONNÉE POUR UN ASSEMBLAGE EXCLUANT LES ARTICLES MARQUÉS D'UN ASTÉRISQUE / QUANTITY GIVEN FOR ONE ASSEMBLY EXCLUDING ITEMS MARKED WITH AN ASTERISK.

PEINTURE(m2) PAINT SURFACE(2)	0	CAOUTCHOUC(m2) RUBBER SURFACE(2)	0	PL.USURE(kg) WEIGHT OF LINERS(2)	0	POIDS TOT.(kg) TOT. WEIGHT(2)	0	REQUIS TOTAL TOTAL REQ'D	1

Grand./Size	Dessin No / Drawing No.	Page/Sheet	Révision
D	53376	1 of 1	0

No Projet / Project No.: 2023-11911
No Production / Job No.: 23-8457

LÉGENDE/LEGEND
1 @ 299 = ASSEMBLAGES FABRIQUÉS / FABRICATED ASSEMBLY
300 @ 499 = COMPOSANTES MÉCANIQUE / MECHANICAL COMPONENTS
500 @ 699 = BOULONNERIE / BOLTS

NO.	REVISIONS	DATE (DD-MM-YY)	BY/PAR

THIRD ANGLE PROJECTION / PROJECTION TROISIEME ANGLE

SURFACE FINISH / FINITION SURFACE

Tolérances sauf indications contraires/Tolerances unless otherwise stated

SYSTÈME IMPÉRIAL / IMPERIAL SYSTEM		SYSTÈME MÉTRIQUE / METRIC SYSTEM	
	0 - 36"		0 - 1000mm
	36" +		1000mm +
FRACTION	± 1/16"	ENTIER / INTEGER	± 1 mm
	± 1/8"		± 2mm
2 PLACES .XX	± .010"	1 PLACES .X	± .50 mm
3 PLACES .XXX	± .005"	2 PLACES .XX	± .25 mm
ANGLES	± 1/2°	3 PLACES .XXX	± .125 mm

Ébavurer les arêtes vives (S.I.C.)/Deburring sharp edges (U.O.S)

Weld inspection according CSA W59 section 11 except otherwise noted
VT: 100% PT: As per symbol
UT: As per symbol MT: As per symbol
Sealed welds: 100% LT (leak test)
Lifting lugs: 100% MT , 100%VT

Inspection des soudures selon CSA W59 section 11 sauf indication contraire
VT: 100% PT: Selon symbole
UT: Selon symbole MT: Selon symbole
Soudures étanches: 100% LT (essai d'étanchéité)
Anneaux de levage: 100% MT , 100%VT

THIS DRAWING AND ALL THE INFORMATION IT CONTAINS ARE THE EXCLUSIVE PROPERTY OF LES INDUSTRIES FOURNIER INC. IT IS STRICTLY FORBIDDEN TO COMMUNICATE OR USE THEM FOR PURPOSES OTHER THAN THOSE FOR WHICH THEY ORIGINAL INTENDED, EVEN OR IN THE USE COULD BE HARMFUL TO THE INTERESTS OF LES INDUSTRIES FOURNIER INC. THIS DRAWING IN WHOLE OR IN PART MAY NOT BE REPRODUCED IN ANY FASHION AND HAS TO BE RETURNED TO LES INDUSTRIES FOURNIER INC. UPON REQUEST.

CE DESSIN ET TOUTES LES INFORMATIONS QU'IL CONTIENT SONT LA PROPRIÉTÉ EXCLUSIVE DE LES INDUSTRIES FOURNIER INC. IL EST STRICTEMENT INTERDIT DE COMMUNIQUER OU UTILISER SON CONTENU À D'AUTRES FINS QUE CELLES PRÉVUES ORIGINALEMENT OU POUVANT ÊTRE PRÉJUDICIABLES AUX INTÉRÊTS DE LES INDUSTRIES FOURNIER INC. TOUTE REPRODUCTION DE CE DESSIN EST INTERDITE ET IL DOIT ÊTRE RETOURNÉ SUR DEMANDE.

Lire conjointement avec PRIE approuvé / Read in conjunction with the approved ITP

FOURNIER INDUSTRIES INC.
LES INDUSTRIES FOURNIER INC.
3787 BOUL. FRONTENAC, THETFORD-MINES
QUEBEC, CANADA, G6H-2B5

WINNIPEG, MA
DEWATERING SYSTEM
ROTARY PRESS ø36"
PROCESS DIAGRAM #1
MODEL 3(4)-900/4000CVP SS304

Dessiné / Drawn	Vérifié / Checked	Approuvé / Approved	No IFI / IFI No.
J.LESSARD	E.GAMACHE	A.DORVAL	
Date: 26-06-2023	Echelle / Scale: -----	No Équipement du Client / Customer Equipment No.	

Grand./Size	Dessin No / Drawing No.	Page/Sheet	Révision
D	53376	1 of 1	0

INTERFACE BETWEEN PIPING OF ROTARY PRESS AND CUSTOMER PIPING

A	SLUDGE INLET ø76.2mm(ø3") FLANGE
B	POLYMER INLET ø50.8mm(ø2") FLANGE
C	SLUDGE RECIRCULATION OUTLET ø76.2mm(ø3")-NPT
D	WASH WATER INLET ø25.4mm(ø1")-NPT (3 PLACES) (ROTARY PRESS)
E	FILTRATE OUTLET ø152.4mm(ø6") PIPE
F	WASH WATER INLET ø38.1mm(ø1 1/2")-NPT (FLOCCULATOR)
G	JUNCTION BOX AIR INLET ø6mm(ø1/4")-NPT
H	JUNCTION BOX AIR OUTLET ø6mm(ø1/4")-(PLASTIC TUBING)
J	AIR INLET FOR VALVE WITH ACTUATOR ø6mm(ø1/4")-(PLASTIC TUBING)
K	WATER INLET POLYMER SYSTEM ø12.7mm(ø1/2")- NPT/F
L	NEAT POLYMER INLET ø12.7mm(ø1/2")-NPT/F
M	MIXED POLYMER OUTLET ø50.8(ø2") FLANGE, CLASS 150#

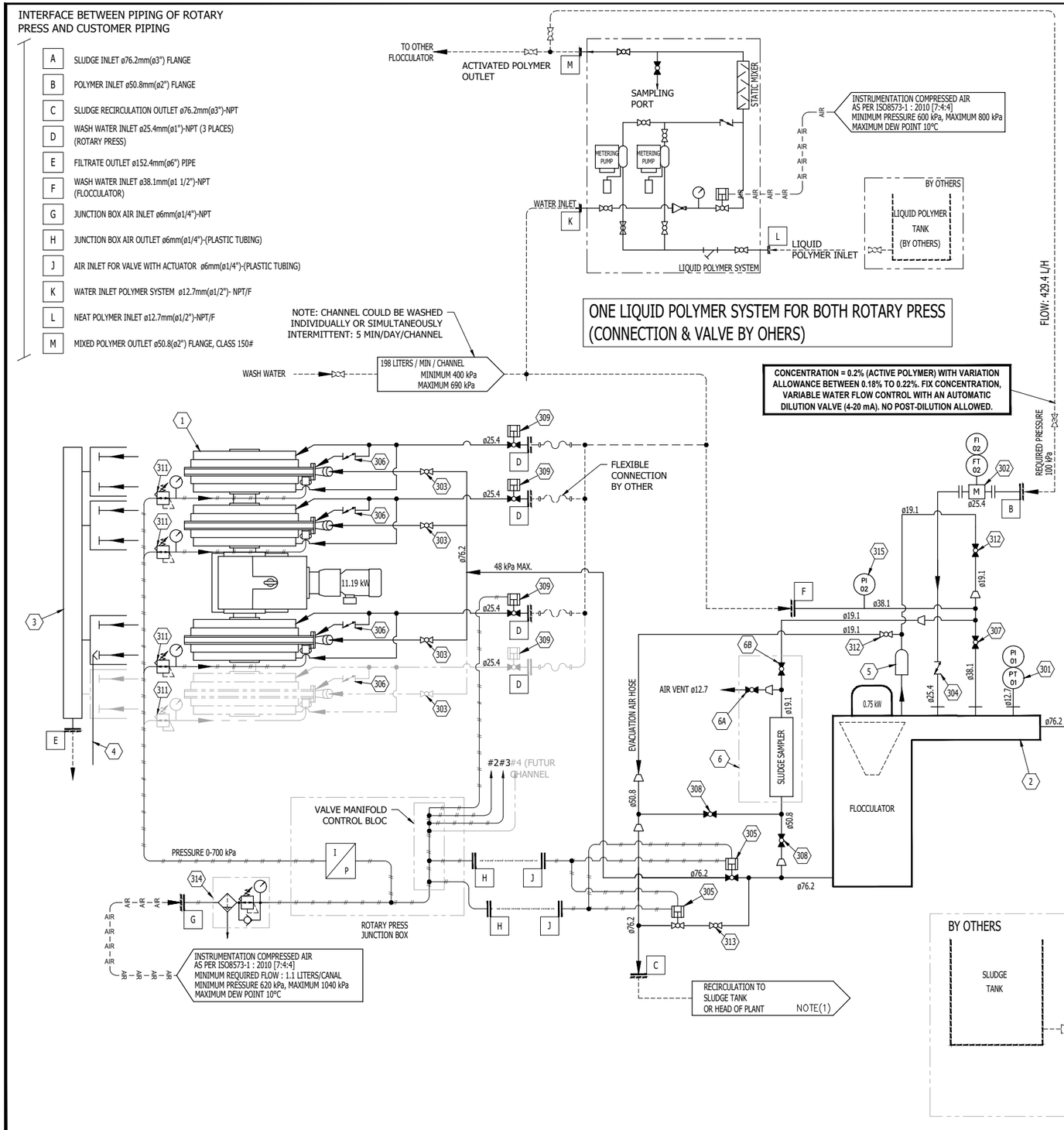

ARTICLE ITEM	REPÈRE REF.	NOMBRE QTY(1)	DÉSIGNATION / DESIGNATION	MATÉRIEL MATERIAL	POIDS(kg) WEIGHT UNIT.(1)	REMARQUES / NOTES - #IFI
1		1	ROTARY PRESS #3(4)-900/4000CVP SS304			
			WITH VARIABLE SPEED MOTOR 11.19 kW (15 HP)			
2		1	FLOCCULATOR MODEL #20-300-900			
			WITH VARIABLE SPEED MOTOR 0.75 kW (1 HP)			
3		1	FILTRATE MANIFOLD	PVC		
4		1	FILTRATE SAMPLER			IFI-01903
5		1	AIR BLEEDER Ø51mm (Ø2")	PVC		IFI-01719
6		1	SLUDGE SAMPLER			IFI-01522
6A		1	FULL PORT BALL VALVE Ø13mm (Ø1/2") NPT	S.S.		C.F.F. MODEL 1/2" SS-2
6B		1	FULL PORT BALL VALVE Ø19mm (Ø3/4") NPT	S.S.		C.F.F. MODEL 3/4" SS-2
301		1	PRESSURE TRANSMITTER, 4-20 mA	S.S.		E&H CERABAR S PMC71B
302		1	POLYMER FLOWMETER, Ø25mm (Ø1") 24 VOLTS			E&H MODEL #5WB825-24V
303		3	FULL PORT BALL VALVE, Ø76mm (Ø3") FLANGED	CAST IRON		AMERICAN VALVE 4000
304		1	CHECK VALVE Ø25mm (Ø1") NPT, CLASS 150#			IFC #1"SC6000TSSSSM
305		2	FULL PORT BALL VALVE , Ø76mm (Ø3") FLANGED	CAST IRON		AMERICAN VALVE 4000
			C/W PNEUMATIC ACTUATOR			FESTO 13117330, 13117331
306		3	CHECK VALVE Ø19mm (Ø3/4") NPT, CLASS 150#			IFC #3/4"SC6000TSSSSM
307		1	FULL PORT BALL VALVE Ø38mm (Ø1 1/2") NPT	S.S.		C.F.F. MODEL 1 1/2" SS-2
308		2	FULL PORT BALL VALVE Ø51mm (Ø2") NPT	S.S.		C.F.F. MODEL 2" SS-2
309		3	PNEUMATIC FULL PORT BALL VALVE Ø25mm (Ø1")	S.S.		FESTO #13117333
310		1	SLUDGE FLOWMETER, Ø76mm (Ø3") 24 VOLTS			E&H MODEL #5WB880-24V
311		3	PRESSURE REGULATOR			FESTO VPPE
312		2	FULL PORT BALL VALVE Ø19mm (Ø3/4") NPT	S.S.		C.F.F. MODEL 3/4" SS-2
313		1	FULL PORT BALL VALVE Ø76mm (Ø3") NPT	S.S.		C.F.F. MODEL 3" SS-2
314		1	AIR FILTER / REGULATOR WITH AUTMOMATED DRAIN			FESTO 527694
315		1	PRESSURE GAUGE 0-160 PSI	S.S.		ROYAL #SSG-2502-160
316		1	FOURNIER LIQUID POLYMER SYSTEM			POLYSYS-1/2-120V
317		1	POLYMER PUMP HEAD (POLYMER SYSTEM SPARE)			WM-RENU30
318		1	FITTING HOSEBARB ø12.7(ø1/2) (POLYMER SYSTEM SPARE)			INT-OM9.401H.P05

(1) LA QUANTITÉ EST DONNÉE POUR UN ASSEMBLAGE / QUANTITY GIVEN IS FOR ONE ASSEMBLY.
(2) LA QUANTITÉ EST DONNÉE POUR UN ASSEMBLAGE EXCLUANT LES ARTICLES MARQUÉS D'UN ASTÉRISQUE / QUANTITY GIVEN FOR ONE ASSEMBLY EXCLUDING ITEMS MARKED WITH AN ASTERISK.

PEINTURE(m2) PAINT SURFACE(2)	0	CAOUTCHOUC(m2) RUBBER SURFACE(2)	0	PL.USURE(kg) WEIGHT OF LINERS(2)	0	POIDS TOT.(kg) TOT. WEIGHT(2)	0	REQUIS TOTAL TOTAL REQ'D	1

Grand./Size D | Dessin No / Drawing No. 53377 | Page/Sheet 1 of 1 | Révision 0

No Projet / Project No. 2023-11911 | No Production / Job No. 23-8459

LÉGENDE/LEGEND

1 @ 299	= ASSEMBLAGES FABRIQUÉS / FABRICATED ASSEMBLY
300 @ 499	= COMPOSANTES MÉCANIQUE / MECHANICAL COMPONENTS
500 @ 699	= BOULONNERIE / BOLTS

NOTES GÉNÉRALES/GENERAL NOTES

NOTE (1):THIS LINE SHALL BE DRAINED BY GRAVITY TO ALLOW THE DRAINAGE OF THE SLUDGE SAMPLER.

-SCHEDULE 80 PVC FOR POLYMER PIPING
-SCHEDULE 10 SS FOR SLUDGE PIPING

- - - - - - - - : PIPING SUPPLY BY OTHERS.
: AIR TUBE SUPPLY AND INSTALLED BY FOURNIER.
AIR AIR AIR AIR : AIR TUBE SUPPLY & INSTALLED BY OTHER.
. . . . . : AIR TUBE SUPPLY BY FOURNIER INSTALLED BY OTHER.

LEGEND
FI: FLOW INDICATOR
FT: FLOW TRANSMITTER
PI: PRESSURE INDICATOR
PT: PRESSURE TRANSMITTER
PS: PRESSURE SWITCH

NO.	REVISIONS	DATE (DD-MM-YY)	BY/PAR

THIRD ANGLE PROJECTION / PROJECTION TROISIEME ANGLE

SURFACE FINISH 125 FINITION SURFACE

Tolérances sauf indications contraires/Tolerances unless otherwise stated

SYSTÈME IMPÉRIAL / IMPERIAL SYSTEM		SYSTÈME MÉTRIQUE / METRIC SYSTEM	
	0 - 36"		0 - 1000mm
	36" +		1000mm +
FRACTION	± 1/16"	± 1/8"	ENTIER / INTEGER ± 1 mm ± 2mm
2 PLACES .XX	± .010"		1 PLACES .X ± .50 mm
3 PLACES .XXX	± .005"		2 PLACES .XX ± .25 mm
ANGLES	± 1/2°		3 PLACES .XXX ± .125 mm

Ébavurer les arêtes vives (S.I.C.)/Deburring sharp edges (U.O.S)

Weld inspection according CSA W59 section 11 except otherwise noted
VT: 100% PT: As per symbol
UT: As per symbol MT: As per symbol
Sealed welds: 100% LT (leak test)
Lifting lugs: 100% MT , 100%VT

Inspection des soudures selon CSA W59 section 11 sauf indication contraire
VT: 100% PT: Selon symbole
UT: Selon symbole MT: Selon symbole
Soudures étanches: 100% LT (essai d'étanchéité)
Anneaux de levage: 100% MT , 100%VT

THIS DRAWING AND ALL THE INFORMATION IT CONTAINS ARE THE EXCLUSIVE PROPERTY OF LES INDUSTRIES FOURNIER INC. IT IS STRICTLY FORBIDDEN TO COMMUNICATE TO USE UTILIZE IN ANY MANNER WHATSOEVER OTHER THAN THE ORIGINAL INTENDED USES OR IF THE USE COULD IN HARMFUL TO THE INTERESTS OF LES INDUSTRIES FOURNIER INC. THIS DRAWING IN WHOLE OR IN PART MAY NOT BE REPRODUCED IN ANY FASHION AND HAS TO BE RETURNED TO LES INDUSTRIES FOURNIER INC. UPON REQUEST.

CE DESSIN ET TOUTES LES INFORMATIONS QU'IL CONTIENT SONT LA PROPRIÉTÉ EXCLUSIVE DE LES INDUSTRIES FOURNIER INC. IL EST STRICTEMENT INTERDIT DE COMMUNIQUER OU UTILISER SON CONTENU À D'AUTRES FINS QUE CELLES PRÉVUES ORIGINALEMENT OU POUVANT ÊTRE PRÉJUDICIABLES AUX INTÉRÊTS DE LES INDUSTRIES FOURNIER INC. TOUTE REPRODUCTION DE CE DESSIN EST INTERDITE ET IL DOIT ÊTRE RETOURNÉ SUR DEMANDE.

Lire conjointement avec PRIE approuvé / Read in conjunction with the approved ITP

FOURNIER INDUSTRIES INC.
LES INDUSTRIES FOURNIER INC.
3787 BOUL. FRONTENAC, THETFORD-MINES
QUEBEC, CANADA, G6H-2B5

WINNIPEG, MA
DEWATERING SYSTEM
ROTARY PRESS ø36"
PROCESS DIAGRAM #2
MODEL 3(4)-900/4000CVP SS304

Dessiné / Drawn	Vérifié / Checked	Approuvé / Approved	No IFI / IFI No.
J.LESSARD	E.GAMACHE	A.DORVAL	
Date 26-06-2023	Echelle / Scale -----	No Équipement du Client / Customer Equipment No.	

Grand./Size D | Dessin No / Drawing No. 53377 | Page/Sheet 1 of 1 | Revision 0

FQF084 (06-2017)

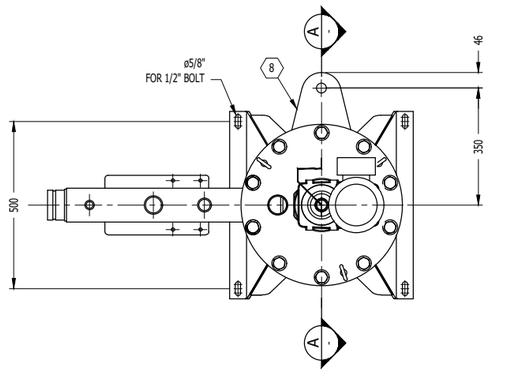

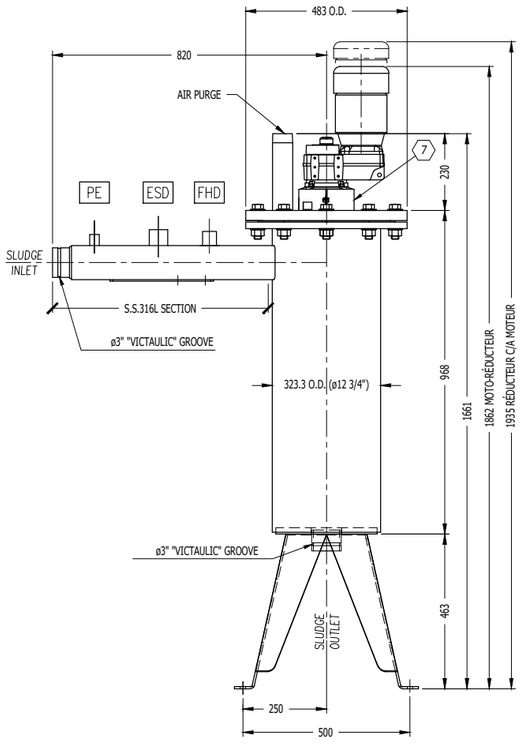

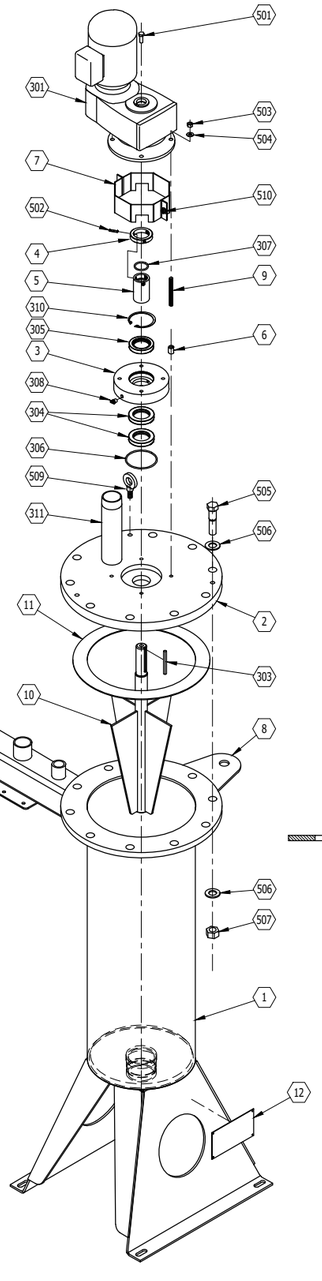

EXPLODED VIEW

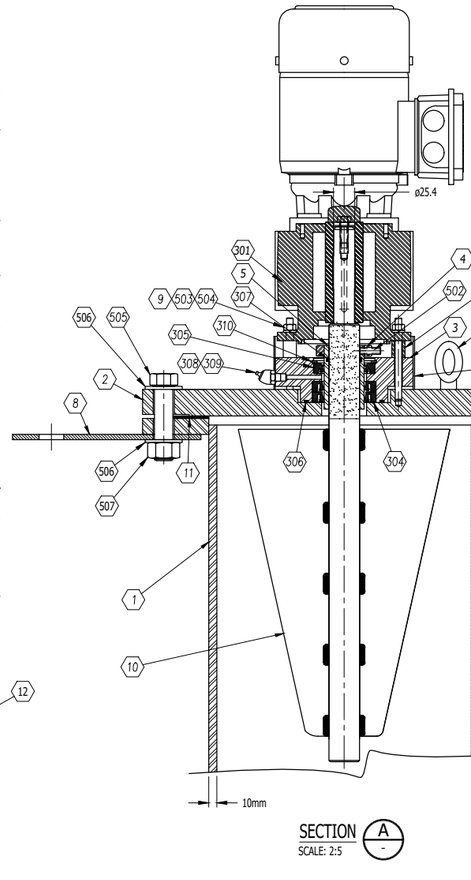

SECTION A
SCALE: 2:5

ARTICLE ITEM	REPÈRE REF.	NOMBRE QTY(1)	DÉSIGNATION / DESIGNATION	MATÉRIEL MATERIAL	POIDS(kg) WEIGHT UNIT.(1)	REMARQUES / NOTES - #IFI
1		1	TANK	STEEL		IFI-01825
2		1	COVER	STEEL		IFI-02395
3		1	HOUSING SEAL	STEEL		IFI-01229
4		1	COLLAR	S.S.316L		IFI-01742
5		1	WEAR SLEEVE, FINISH 16 RMS, NITRIDING	S.S.316L		IFI-00832
6		4	SPACER	S.S.316L		IFI-01264
7		1	SHAFT GUARD	S.S.316L		IFI-02457
8		1	SAMPLER SUPPORT	S.S.316		IFI-01927
9		4	THREADED ROD M8 x 1.25 - 100mm LG	S.S.316L		IFI-01743
10		1	AGITATOR	S.S.316L		IFI-02404
11		1	COVER GASKET	SBR		IFI-00685
12		1	IDENTIFICATION PLATE			IFI-00686
301		1	GEAR MOTOR, HOLLOW SHAFT ø1"			NORD #SK0282.1 AXFBH
			MOTOR SPEED 1750 RPM, RATIO 4.79:1,			-80LP/4
			0.75 kW (1 HP), 575/3/60			
303		1	KEY 1/4" X 1/4" - 3"LG	C1020		
304		2	SHAFT SEAL, TYPE LUP ø1.875" X ø3.000"			IFI-00690
305		1	SHAFT SEAL, TYPE LDS ø1.875" X ø2.890"			IFI-00691
306		1	"O" RING ø0.139" X I.D. 3.484"	BUNA-N		JTO-2-238-70B
307		1	"O" RING ø0.139" X I.D. 1.421"	BUNA-N		JTO-2-221-70B
308		1	GREASE FITTING 30°, 1/8" NPT	PLATED		ALE-1611-BKP
309		1	RELIEF FITTING, 1/8" NPT	PLATED		ALE-47200KP
310		1	INTERNAL RETAINING RING ø73mm	S.S.		IFI-00987
311		1	ø2" NPT X 10" NIPPLE SCH.40	S.S.316		117817
501		1	HEX. BOLT ø3/8"-16NC - 1"LG	S.S.316		102111KP
502		3	SOCKET HEAD SET SCREW "CUP POINT"	S.S.316		107615KP
			M8 x 1.25 - 25mm LG			
503		4	HEX. NUT M8 x 1.25	S.S.316		100574KP
504		4	LOCK WASHER M8 NOM.	S.S.316		100566KP
505		10	HEX. BOLT M22 x 2.5 - 90mm LG	S.S.316		104246KP
506		20	FLAT WASHER M22 NOM.	S.S.316		117930KP
507		10	HEX. NUT M22 x 2.5	S.S.316		107614KP
509		3	EYE BOLT M12 x 1.75	S.S.		104403KP
510		2	HEX. BOLT M6 x 1.0 - 20mm LG	S.S.316		C/W 1 HN, 1 FW

NOTES:

- Flocculator, gear reducer and motor will be painted with the following specifications:

Surface preparation:
Sand blasting according to SSPC-SP10 for the equipment.

Primer:
Type: Epoxy resin (high-built) Carboguard 893 (outside)
Epoxy resin (high-built) Plasite 7122 (inside)
Dry thickness: 6 mls minimum

Paint:
Type: Polyurethane
Dry thickness: 1.5 mls by layer (2 layers) = 3 mls minimum
Total thickness: 9 mls minimum
Color: Carbothane 134 HG Special Fournier Blue V111

During the installation of the wiring for the electric motor, please provide an additional 2 meters of wire to allow the disassembly of the flocculator cover without disconnecting the electric motor.

(1) LA QUANTITÉ EST DONNÉE POUR UN ASSEMBLAGE / QUANTITY GIVEN IS FOR ONE ASSEMBLY.
(2) LA QUANTITÉ EST DONNÉE POUR UN ASSEMBLAGE EXCLUANT LES ARTICLES MARQUÉS D'UN ASTÉRISQUE / QUANTITY GIVEN FOR ONE ASSEMBLY EXCLUDING ITEMS MARKED WITH AN ASTERISK.

PEINTURE(m2) PAINT SURFACE(2)	0	CAOUTCHOUC(m2) RUBBER SURFACE(2)	0	PL.USURE(kg) WEIGHT OF LINERS(2)	0	POIDS TOT.(kg) TOT. WEIGHT(2)	216	REQUIS TOTAL TOTAL REQ'D	1

FLOCCULATOR # 1
TK-P3311

Grand./Size D | Dessin No / Drawing No. 53378 | Page/Sheet 1 of 1 | Révision 00

No Projet / Project No. 2023-11911 | No Production / Job No. 23-8458

LÉGENDE/LEGEND
1 @ 299 = ASSEMBLAGES FABRIQUÉS / FABRICATED ASSEMBLY
300 @ 499 = COMPOSANTES MÉCANIQUE / MECHANICAL COMPONENTS
500 @ 699 = BOULONNERIE / BOLTS

NOTES GÉNÉRALES/GENERAL NOTES

FHD COUPLING ø1"–NPT FOR POLYMER PIPE ø1"

ESD COUPLING ø1 1/2"–NPT FOR CLEANING WATER PIPE ø1 1/2"

PE COUPLING ø1/2"–NPT FOR PRESSURE TRANSMITTER

VOLUME: 65 Liters
DESIGN FOR 15 PSI AT 60°C MAX.
DRY WEIGHT: 216 Kg.

NO.	REVISIONS	DATE (DD-MM-YY)	BY/PAR

THIRD ANGLE PROJECTION
PROJECTION TROISIEME ANGLE

SURFACE FINISH / FINITION SURFACE 125

Tolérances sauf indications contraires/Tolerances unless otherwise stated

SYSTÈME IMPÉRIAL / IMPERIAL SYSTEM				SYSTÈME MÉTRIQUE / METRIC SYSTEM			
	0 - 36"	36" +			0 - 1000mm	1000mm +	
FRACTION	± 1/16"	± 1/8"	ENTIER / INTEGER	± 1 mm	± 2mm		
2 PLACES .XX	± .010"		1 PLACES .X	± .50 mm			
3 PLACES .XXX	± .005"		2 PLACES .XX	± .25 mm			
ANGLES		± 1/2°	3 PLACES .XXX	± .125 mm			

Ébavurer les arêtes vives (S.I.C.)/Deburring sharp edges (U.O.S)

Weld inspection according CSA W59 section 11 except otherwise noted
VT: 100% PT: As per symbol
UT: As per symbol MT: As per symbol
Sealed welds: 100% LT (leak test)
Lifting lugs: 100% MT , 100%VT

Inspection des soudures selon CSA W59 section 11 sauf indication contraire
VT: 100% PT: Selon symbole
UT: Selon symbole MT: Selon symbole
Soudures étanches: 100% LT (essai d'étanchéité)
Anneaux de levage: 100% MT , 100%VT

THIS DRAWING AND ALL THE INFORMATION IT CONTAINS ARE THE EXCLUSIVE PROPERTY OF LES INDUSTRIES FOURNIER INC. IT IS STRICTLY FORBIDDEN TO COMMUNICATE OR USE THE INFORMATION FOR PURPOSES OTHER THAN THE ORIGINAL INTENDED ONES OR IF THE USE COULD BE HARMFUL TO THE INTERESTS OF LES INDUSTRIES FOURNIER INC. THIS DRAWING OR INVOICE OR IN PART MAY NOT BE REPRODUCED IN ANY FASHION AND HAS TO BE RETURNED TO LES INDUSTRIES FOURNIER INC. UPON REQUEST.

CE DESSIN ET TOUTES LES INFORMATIONS QU'IL CONTIENT SONT LA PROPRIÉTÉ EXCLUSIVE DE LES INDUSTRIES FOURNIER INC. IL EST STRICTEMENT INTERDIT DE COMMUNIQUER OU UTILISER SON CONTENU À DES FINS QUI CELLES PRÉVUES ORIGINALEMENT OU SI CETTE UTILISATION PEUT ÊTRE NUISIBLE POUR LES INDUSTRIES FOURNIER INC. TOUTE REPRODUCTION DE CE DESSIN EST INTERDITE ET IL DOIT ÊTRE RETOURNÉ SUR DEMANDE.

Lire conjointement avec PRIE approuvé / Read in conjunction with the approved ITP

Par (Dans) (DJ/DMM/YY)	INVENT	GREN	PEINT	MONT	ELEC				
ETAPES	1	2	3	4	5	6	7	8	9

23-8458

Fournier
FOURNIER INDUSTRIES INC.
LES INDUSTRIES FOURNIER INC.
3787 BOUL. FRONTENAC, THETFORD-MINES
QUEBEC, CANADA, G6H-2B5

WINNIPEG, MB
DEWATERING SYSTEM

FLOCCULATOR # 1 TK-P3311 MODEL 20-300-900
GENERAL ARRANGEMENT

Dessiné / Drawn	Vérifié / Checked	Approuvé / Approved	No IFI / IFI No.
M.BERNIER	E.GAMACHE	D. CLICHE	IFI-02403
Date: 27-06-2023	Echelle / Scale: 1 1/2"=12"	No Équipement du Client / Customer Equipment No.: TK-P3311	

Grand./Size D | Dessin No / Drawing No. 53378 | Page/Sheet 1 of 1 | Révision 00

FQF084 (06-2017)

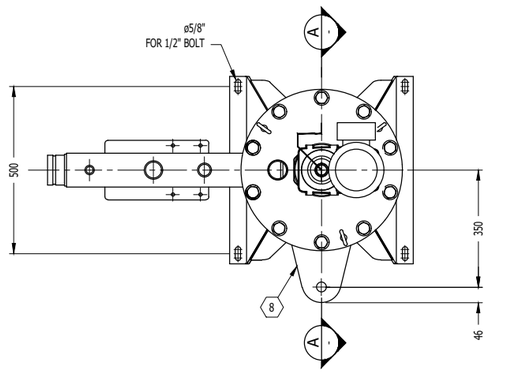

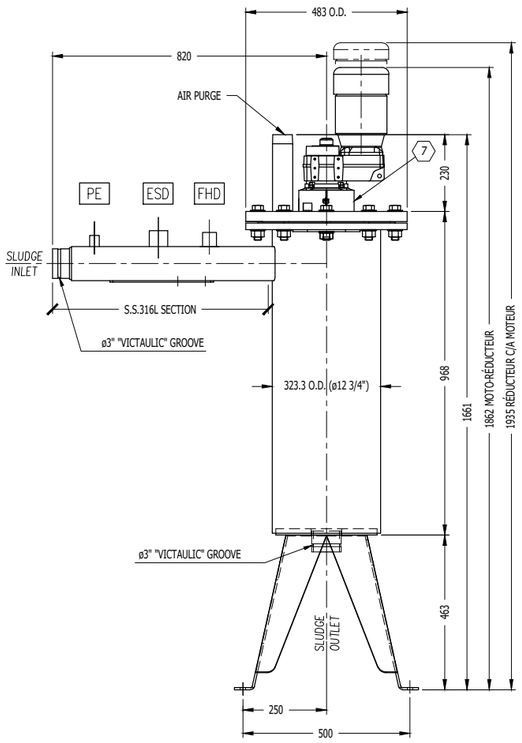

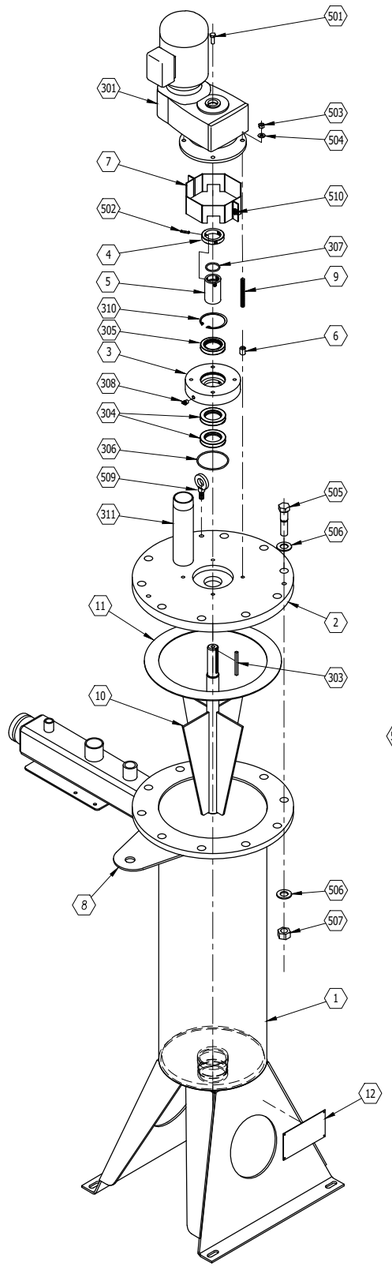

EXPLODED VIEW

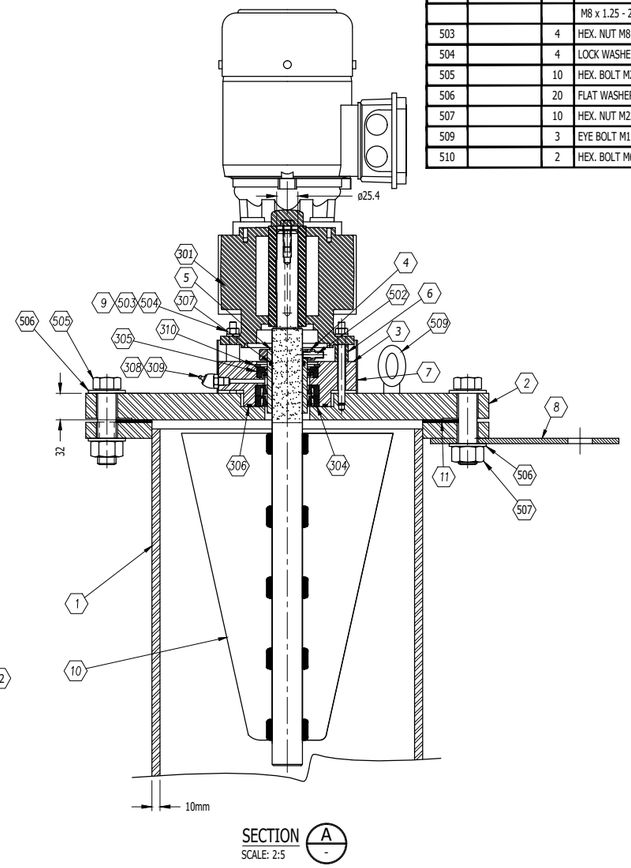

SECTION A
SCALE: 2:5

ARTICLE ITEM	REPÈRE REF.	NOMBRE QTY(1)	DÉSIGNATION / DESIGNATION	MATÉRIEL MATERIAL	POIDS(kg) WEIGHT UNIT.(1)	REMARQUES / NOTES - #IFI
1		1	TANK	STEEL		IFI-01825
2		1	COVER	STEEL		IFI-02395
3		1	HOUSING SEAL	STEEL		IFI-01229
4		1	COLLAR	S.S.316L		IFI-01742
5		1	WEAR SLEEVE, FINISH 16 RMS, NITRIDING	S.S.316L		IFI-00832
6		4	SPACER	S.S.316L		IFI-01264
7		1	SHAFT GUARD	S.S.316L		IFI-02457
8		1	SAMPLER SUPPORT	S.S.316		IFI-01927
9		4	THREADED ROD M8 x 1.25 - 100mm LG	S.S.316L		IFI-01743
10		1	AGITATOR	S.S.316L		IFI-02404
11		1	COVER GASKET	SBR		IFI-00685
12		1	IDENTIFICATION PLATE			IFI-00686
301		1	GEAR MOTOR, HOLLOW SHAFT ø1"			NORD #SK0282.1 AXFBH
			MOTOR SPEED 1750 RPM, RATIO 4.79:1,			-80LP/4
			0.75 kW (1 HP), 575/3/60			
303		1	KEY 1/4" X 1/4" - 3"LG	C1020		
304		2	SHAFT SEAL, TYPE LUP ø1.875" X ø3.000"			IFI-00690
305		1	SHAFT SEAL, TYPE LDS ø1.875" X ø2.890"			IFI-00691
306		1	"O" RING ø0.139" X I.D. 3.484"	BUNA-N		JTO-2-238-70B
307		1	"O" RING ø0.139" X I.D. 1.421"	BUNA-N		JTO-2-221-70B
308		1	GREASE FITTING 30°, 1/8" NPT	PLATED		ALE-1611-BKP
309		1	RELIEF FITTING, 1/8" NPT	PLATED		ALE-47200KP
310		1	INTERNAL RETAINING RING ø73mm	S.S.		IFI-00987
311		1	ø2" NPT X 10" NIPPLE SCH.40	S.S.316		117817
501		1	HEX. BOLT ø3/8"-16NC - 1"LG	S.S.316		102111KP
502		3	SOCKET HEAD SET SCREW "CUP POINT"	S.S.316		107615KP
			M8 x 1.25 - 25mm LG			
503		4	HEX. NUT M8 x 1.25	S.S.316		100574KP
504		4	LOCK WASHER M8 NOM.	S.S.316		100566KP
505		10	HEX. BOLT M22 x 2.5 - 90mm LG	S.S.316		104246KP
506		20	FLAT WASHER M22 NOM.	S.S.316		117930KP
507		10	HEX. NUT M22 x 2.5	S.S.316		107614KP
509		3	EYE BOLT M12 x 1.75	S.S.		104403KP
510		2	HEX. BOLT M6 x 1.0 - 20mm LG	S.S.316		C/W 1 HN, 1 FW

FLOCCULATOR # 2
TK-P3321

NOTES:

- Flocculator, gear reducer and motor will be painted with the following specifications:

Surface preparation:
Sand blasting according to SSPC-SP10 for the equipment.

Primer:
Type: Epoxy resin (high-built) Carboguard 893 (outside)
Epoxy resin (high-built) Plasite 7122 (inside)
Dry thickness: 6 mls minimum

Paint:
Type: Polyurethane
Dry thickness: 1.5 mls by layer (2 layers) = 3 mls minimum
Total thickness: 9 mls minimum
Color: Carbothane 134 HG Special Fournier Blue V111

During the installation of the wiring for the electric motor, please provide an additional 2 meters of wire to allow the disassembly of the flocculator cover without disconnecting the electric motor.

(1) LA QUANTITÉ EST DONNÉE POUR UN ASSEMBLAGE / QUANTITY GIVEN IS FOR ONE ASSEMBLY.
(2) LA QUANTITÉ EST DONNÉE POUR UN ASSEMBLAGE EXCLUANT LES ARTICLES MARQUÉS D'UN ASTÉRISQUE / QUANTITY GIVEN FOR ONE ASSEMBLY EXCLUDING ITEMS MARKED WITH AN ASTERISK.

PEINTURE(m2) PAINT SURFACE(2)	0	CAOUTCHOUC(m2) RUBBER SURFACE(2)	0	PL.USURE(kg) WEIGHT OF LINERS(2)	0	POIDS TOT.(kg) TOT. WEIGHT(2)	216	REQUIS TOTAL TOTAL REQ'D	1

Grand./Size D | Dessin No / Drawing No. 53379 | Page/Sheet 1 of 1 | Révision 00

No Projet / Project No. 2023-11911 | No Production / Job No. 23-8459

LÉGENDE/LEGEND
1 @ 299 = ASSEMBLAGES FABRIQUÉS / FABRICATED ASSEMBLY
300 @ 499 = COMPOSANTES MÉCANIQUE / MECHANICAL COMPONENTS
500 @ 699 = BOULONNERIE / BOLTS

NOTES GÉNÉRALES/GENERAL NOTES

FHD COUPLING ø1"–NPT FOR POLYMER PIPE ø1"

ESD COUPLING ø1 1/2"–NPT FOR CLEANING WATER PIPE ø1 1/2"

PE COUPLING ø1/2"–NPT FOR PRESSURE TRANSMITTER

VOLUME: 65 Liters
DESIGN FOR 15 PSI AT 60°C MAX.
DRY WEIGHT: 216 Kg.

NO.	REVISIONS	DATE DD-MM-YY	BY/PAR

THIRD ANGLE PROJECTION / PROJECTION TROISIÈME ANGLE

SURFACE FINISH / FINITION SURFACE 125

Tolérances sauf indications contraires/Tolerances unless otherwise stated
SYSTÈME IMPÉRIAL / IMPERIAL SYSTEM — SYSTÈME MÉTRIQUE / METRIC SYSTEM

	0 - 36"	36" +		0 - 1000mm	1000mm +
FRACTION	± 1/16"	± 1/8"	ENTIER / INTEGER	± 1 mm	± 2mm
2 PLACES .XX	± .010"		1 PLACES .X	± .50 mm	
3 PLACES .XXX	± .005"		2 PLACES .XX	± .25 mm	
ANGLES	± 1/2°		3 PLACES .XXX	± .125 mm	

Ébavurer les arêtes vives (S.I.C.)/Deburring sharp edges (U.O.S)

Weld inspection according CSA W59 section 11 except otherwise noted
VT: 100% PT: As per symbole
UT: As per symbol MT: As per symbol
Sealed welds: 100% LT (leak test)
Lifting lugs: 100% MT , 100%VT

Inspection des soudures selon CSA W59 section 11 sauf indication contraire
VT: 100% PT: Selon symbole
UT: Selon symbole MT: Selon symbole
Soudures étanches: 100% LT (essai d'étanchéité)
Anneaux de levage: 100% MT , 100%VT

THIS DRAWING AND ALL THE INFORMATION IT CONTAINS ARE THE EXCLUSIVE PROPERTY OF LES INDUSTRIES FOURNIER INC. IT IS STRICTLY FORBIDDEN TO COMMUNICATE OR USE THE INFORMATION FOR PURPOSES OTHER THAN THE ORIGINAL INTENDED ONES OR THAT COULD BE HARMFUL TO THE INTERESTS OF LES INDUSTRIES FOURNIER INC. THIS DRAWING SHOULD OR IN PART MAY NOT BE REPRODUCED IN ANY FASHION AND HAS TO BE RETURNED TO LES INDUSTRIES FOURNIER INC. UPON REQUEST.

CE DESSIN ET TOUTES LES INFORMATIONS QUI'IL CONTIENT SONT LA PROPRIÉTÉ EXCLUSIVE DE LES INDUSTRIES FOURNIER INC. IL EST STRICTEMENT INTERDIT DE COMMUNIQUER OU UTILISER SON CONTENU À D'AUTRES FINS QUE CELLES PRÉVUES ORIGINALEMENT OU POUVANT ÊTRE PRÉJUDICIABLES AUX INTÉRÊTS DE LES INDUSTRIES FOURNIER INC. TOUTE REPRODUCTION DE CE DESSIN EST INTERDITE ET IL DOIT ÊTRE RETOURNÉ SUR DEMANDE.

Lire conjointement avec PRIE approuvé / Read in conjunction with the approved ITP

Par	INVENT	GREN	PEINT	MONT	ELEC					
ETAPES	1	2	3	4	5	6	7	8	9	

23-8459

Fournier
FOURNIER INDUSTRIES INC.
LES INDUSTRIES FOURNIER INC.
3787 BOUL. FRONTENAC, THETFORD-MINES
QUÉBEC, CANADA, G6H-2B5

WINNIPEG, MB
DEWATERING SYSTEM

FLOCCULATOR # 2 TK-P3321 MODEL 20-300-900
GENERAL ARRANGEMENT

Dessiné / Drawn	Vérifié / Checked	Approuvé / Approved	No IFI / IFI No.
M.BERNIER	E.GAMACHE	D. CLICHE	IFI-02403
Date 27-06-2023	Echelle / Scale 1 1/2"=12"	No Équipement du Client / Customer Equipment No. TK-P3321	

Grand./Size D | Dessin No / Drawing No. 53379 | Page/Sheet 1 of 1 | Révision 00

FQF084 (06-2017)

507		4	HEX. BOLT 5/16-18 X 1in SS 316			102097KP.	
508		4	HEX. NUT 5/16-18 SS 316			102065KP	
509		8	FLAT WASHER 5/16in SS 316			102040KP	

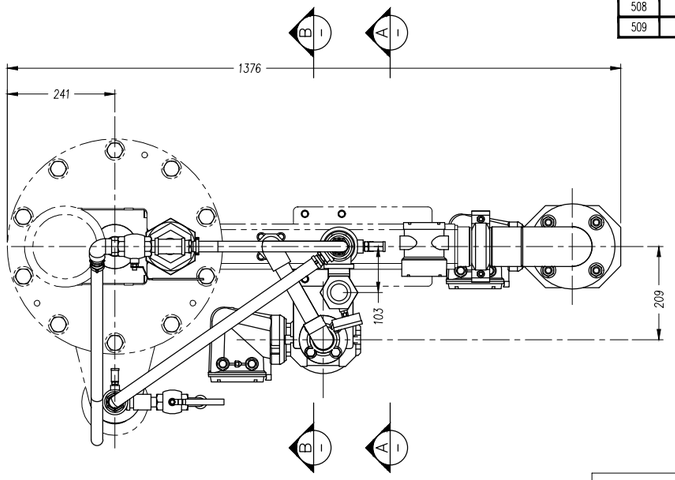

PLAN VIEW

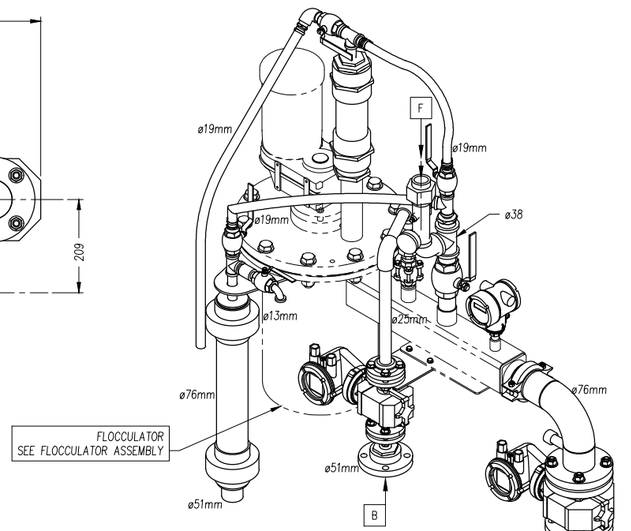

ISOMETRIC VIEW

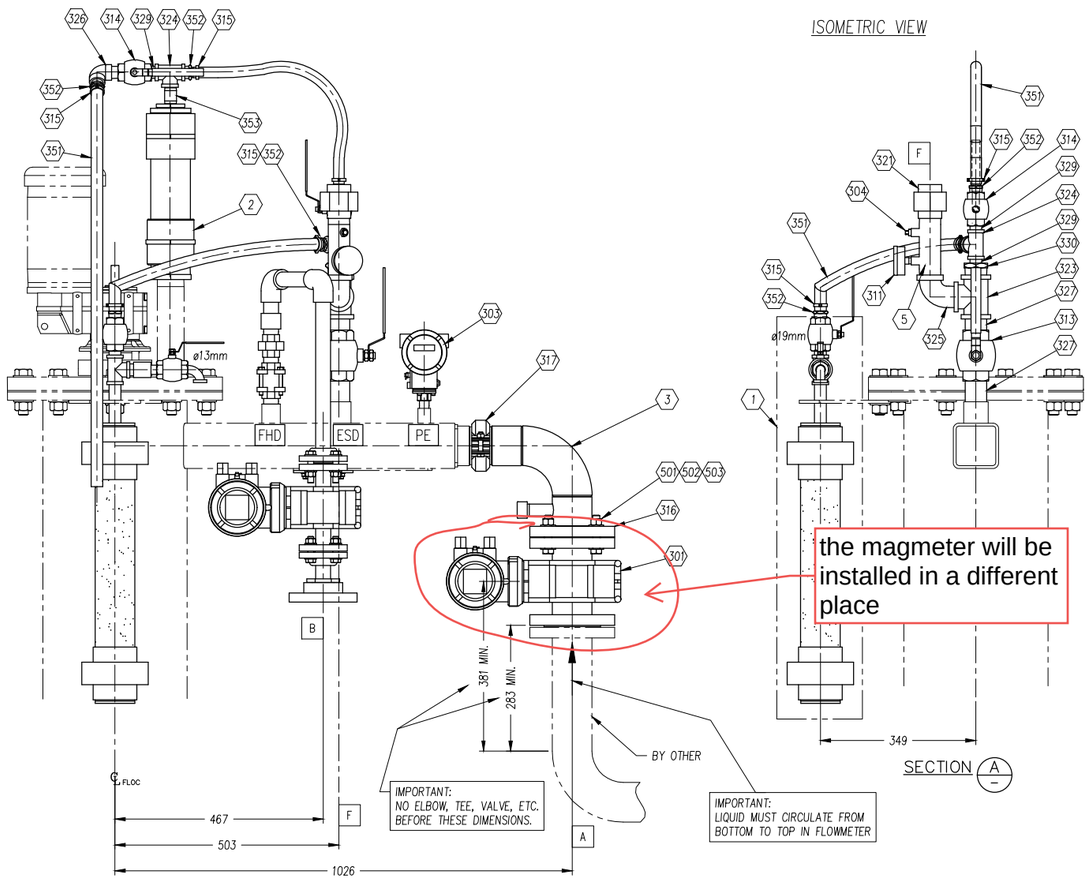

FRONT VIEW

SECTION A

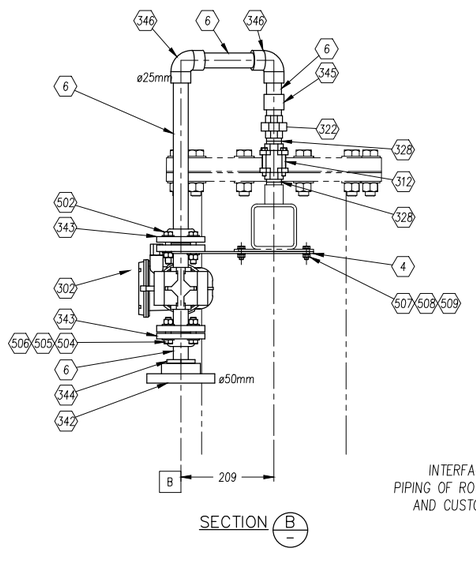

SECTION B

INTERFACE BETWEEN PIPING OF ROTARY PRESS AND CUSTOMER PIPING

A	SLUDGE INLET ø76.2mm- FLANGE
B	POLYMER INLET ø50.8mm- FLANGE
F	WASH WATER INLET ø38.1mm-NPT

(1) LA QUANTITÉ EST DONNÉE POUR UN ASSEMBLAGE / QUANTITY GIVEN IS FOR ONE ASSEMBLY.
(2) LA QUANTITÉ EST DONNÉE POUR UN ASSEMBLAGE EXCLUANT LES ARTICLES MARQUÉS D'UN ASTÉRISQUE / QUANTITY GIVEN FOR ONE ASSEMBLY EXCLUDING ITEMS MARKED WITH AN ASTERISK.

PEINTURE(m2) PAINT SURFACE(2)	0	CAOUTCHOUC(m2) RUBBER SURFACE(2)	0	PL.USURE(kg) WEIGHT OF LINERS(2)	0	POIDS TOT.(kg) TOT. WEIGHT(2)	52	REQUIS TOTAL TOTAL REQ'D	1

*	ARTICLE ITEM	REPÈRE REF.	NOMBRE QTY(1)	DÉSIGNATION / DESIGNATION	MATÉRIEL MATERIAL	POIDS(kg) WEIGHT UNIT.(1)	REMARQUES / NOTES - #IFI
	1		1	FLOCCULATED SLUDGE SAMPLER	CLEAR PVC		IFI-01522
	2		1	AIR BREATHER ø2"	PVC		IFI-01719
*	3		1	ø3" INLET ELBOW	S.S.316L		IFI-02144
	4		1	FLOWMETER SUPPORT	S.S.316L		IFI-01799
	5		1	PRESSURE GAUGE MANIFOLD	S.S.316L		IFI-02135
	6		1	ø1" SCH.80 PIPE	PVC		TU16VC80KP.
*	301		1	ø3" SLUDGE FLOWMETER			E&H, END-5WBB80-24V
	302		1	ø1" POLYMER FLOWMETER			E&H, END-5WBB25-24V
	303		1	PRESSURE TRANSMITTER, 0-30 PSI, 4-20 MA			E&H, END-PMC71B-24V
	304		1	ø1/4" HEX. PLUG	S.S.316		102469
	311		1	PRESSURE GAUGE	S.S.		ROY-SSG-2502-160
	312		1	ø1" NPT CHECK VALVE, CLASS 150#	S.S.		IFC 1"SC600TSSSSM IFI-01939
	313		1	ø1 1/2" NPT BALL VALVE FULL PORT	S.S.		C.F.F.# 1 1/2" SS-2 104616
	314		2	ø3/4" NPT BALL VALVE FULL PORT	S.S.		C.F.F.# 3/4" SS-2 102517
	315		5	"MIKALOR" CLAMP FOR HOSE ø1 1/16"	S.S.		W4-27-29 MIK-W4-27-29KP
*	316		1	ø3" CLASS 150# FLANGE			VICTAULIC STYLE 741W-741-3
*	317		1	ø3" RIGIDE COUPLING			VICTAULIC STYLE 07 VI-07-3
	321		1	ø1 1/2" NPT HEX. UNION	S.S.316L		102449
	322		1	ø1" NPT HEX. UNION	S.S.316L		102447
	323		1	ø1 1/2" NPT, CLASS 150# TEE	S.S.316L		102443
	324		2	ø3/4" NPT, 150# TEE	S.S.316L		102440
	325		1	ø1 1/2" NPT STREET ELBOW 90°	S.S.316L		102597
	326		1	ø3/4" NPT STREET ELBOW 90°	S.S.316L		102433
	327		2	ø1 1/2" - 1 3/4" LG, SCH. 40, CLOSE NIPPLE	S.S.316L		102400
	328		2	ø1" NPT - 1 1/2" LG, SCH. 40, CLOSE NIPPLE	S.S.316L		102393
	329		3	ø3/4" NPT - 1 3/8" LG, SCH 40, CLOSE NIPPLE	S.S.316L		102388
	330		1	ø1 1/2" NPT/M x ø3/4" NPT/F REDUCER	S.S.316L		102339
	342		1	ø2" SCH. 80 SLIP FLANGE	PVC		LAS-851-020
	343		2	ø1" SCH. 80 SLIP FLANGE	PVC		LAS-851-010
	344		1	REDUCER ø2" SPIG TO ø1" SLIP	PVC		LAS-837-249
	345		1	ø1"NPT/M x ø1" SLIP MALE ADAPTOR	PVC		LAS-836-010
	346		2	ø1 SLIP x ø1" SLIP ELBOW 90°	PVC		LAS-806-010KP
	351		1	ø3/4" x 120" LG, HOSE	BLACK EPDM		MAG-CWD150007KP
	352		5	ø3/4" NPT/M - 3/4" BARB, HOSE ADAPTOR	S.S.316		IFI-02524
	353		1	ø3/4" NPT - 2" LG, SCH. 40, HEX. NIPPLE	S.S.316		SWA-SS12HN
*	501		4	HEX. BOLT 5/8-11 X 3in SS 316			104204KP
*	502		4	HEX. NUT 5/8-11 SS 316			102069KP
*	503		8	FLAT WASHER M16 SS 316			100562KP
	504		8	HEX. BOLT 1/2-13 X 2.25in SS 316			102134KP
	505		8	NYLON-INSERT LOCKNUT 1/2-13 SS 316			102078KP
	506		16	FLAT WASHER M12 SS 316			100561KP

FLOCCULATOR # 1
TK-P3311

Grand./Size D | Dessin No / Drawing No. 53380 | Page/Sheet 1 of 1 | Révision 00

No Projet / Project No. 2023-11911 | No Production / Job No. 23-8458

LÉGENDE/LEGEND

1 @ 299	= ASSEMBLAGES FABRIQUÉS / FABRICATED ASSEMBLY
300 @ 499	= COMPOSANTES MÉCANIQUE / MECHANICAL COMPONENTS
500 @ 699	= BOULONNERIE / BOLTS

NOTES GÉNÉRALES/GENERAL NOTES

FHD COUPLING ø25.4mm-NPT FOR POLYMER PIPE ø25.4mm

ESD COUPLING ø38.1mm-NPT FOR CLEANING WATER PIPE ø38.1mm

PE COUPLING ø12.7mm-NPT FOR PRESSURE TRANSMITTER

* SHIPPED LOOSE

NO.	REVISIONS	DATE (DD-MM-YY)	BY/PAR

THIRD ANGLE PROJECTION
PROJECTION TROISIEME ANGLE

SURFACE FINISH 125 — FINITION SURFACE

Tolérances sauf indications contraires/Tolerances unless otherwise stated
SYSTÈME IMPÉRIAL / IMPERIAL SYSTEM — SYSTÈME MÉTRIQUE / METRIC SYSTEM

FRACTION	± 1/16"	ENTIER / INTEGER	± 1 mm
2 PLACES .XX	± .010"	1 PLACES .X	± .50 mm
3 PLACES .XXX	± .005"	2 PLACES .XX	± .25 mm
ANGLES	± 1/2°	3 PLACES .XXX	± .125 mm

0 - 36" | 36" + | 0 - 1000mm | 1000mm +
± 1/8" | ± 2mm

Ébavurer les arêtes vives (S.I.C.)/Deburring sharp edges (U.O.S)

Weld inspection according CSA W59 section 11 except otherwise noted
VT: 100% PT: As per symbol
UT: As per symbol MT: As per symbol
Sealed welds: 100% LT (leak test)
Lifting lugs: 100% MT , 100%VT

Inspection des soudures selon CSA W59 section 11 sauf indication contraire
VT: 100% PT: Selon symbole
UT: Selon symbole MT: Selon symbole
Soudures étanches: 100% LT (essai d'étanchéité)
Anneaux de levage: 100% MT , 100%VT

THIS DRAWING AND ALL THE INFORMATION IT CONTAINS ARE THE EXCLUSIVE PROPERTY OF LES INDUSTRIES FOURNIER INC. IT IS STRICTLY FORBIDDEN TO COMMUNICATE OR USE THE INFORMATION FOR PURPOSES OTHER THAN THE ORIGINAL INTENDED ONES OR IF THE USE COULD BE HARMFUL TO THE INTERESTS OF LES INDUSTRIES FOURNIER INC. REPRODUCTION OF THIS PLAN MAY NOT BE REPRODUCED IN ANY MANNER AND HAS TO BE RETURNED TO LES INDUSTRIES FOURNIER INC. UPON REQUEST.

CE DESSIN ET TOUTES LES INFORMATIONS Q'IL CONTIENT SONT LA PROPRIÉTÉ EXCLUSIVE DE LES INDUSTRIES FOURNIER INC. IL EST STRICTEMENT INTERDIT DE COMMUNIQUER OU UTILISER SON CONTENU À D'AUTRES FINS QUE CELLES PRÉVUES ORIGINALEMENT OU POUVANT ÊTRE PRÉJUDICIABLES AUX INTÉRÊTS DE LES INDUSTRIES FOURNIER INC. TOUTE REPRODUCTION DE CE DESSIN EST INTERDITE ET IL DOIT ÊTRE RETOURNÉ SUR DEMANDE.

Lire conjointement avec PRIE approuvé / Read in conjunction with the approved ITP

Par	Date (DD/MM/YY)	INVENT	MONT	ELEC					
ETAPES		1	2	3	4	5	6	7	8	9

23-8458

fournier
FOURNIER INDUSTRIES INC.
LES INDUSTRIES FOURNIER INC.
3787 BOUL. FRONTENAC, THETFORD-MINES
QUEBEC, CANADA, G6H-2B5

WINNIPEG, MB
DEWATERING SYSTEM
PIPING ARRANGEMENT
FLOCCULATOR # 1 TK-P3311 INLET SECTION (LEFT ARR'T)
C/W 25.4mm(1") AND 76.2mm(3") FLOWMETERS

Dessiné / Drawn	Vérifié / Checked	Approuvé / Approved	No IFI / IFI No.
M.BERNIER	E.GAMACHE	D. CLICHE	
Date: 27-06-2023	Echelle / Scale: 1:6	No Équipement du Client / Customer Equipment No.: TK-P3311	

Grand./Size D | Dessin No / Drawing No. 53380 | Page/Sheet 1 of 1 | Révision 00

FQF084 (06-2017)

507		4	HEX. BOLT 5/16–18 X 1in SS 316			102097KP.
508		4	HEX. NUT 5/16–18 SS 316			102065KP
509		8	FLAT WASHER 5/16in SS 316			102040KP

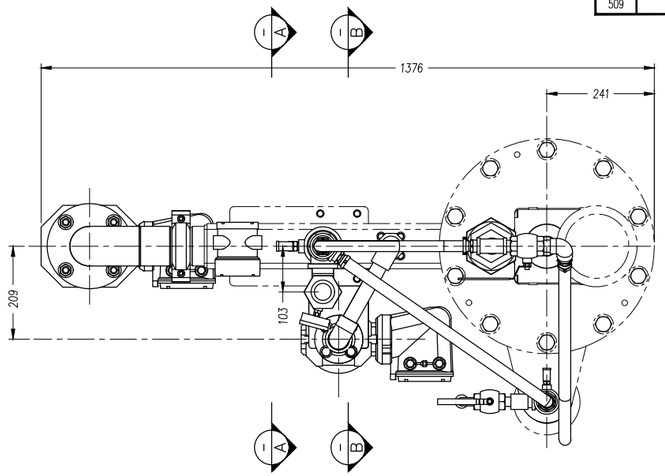

PLAN VIEW

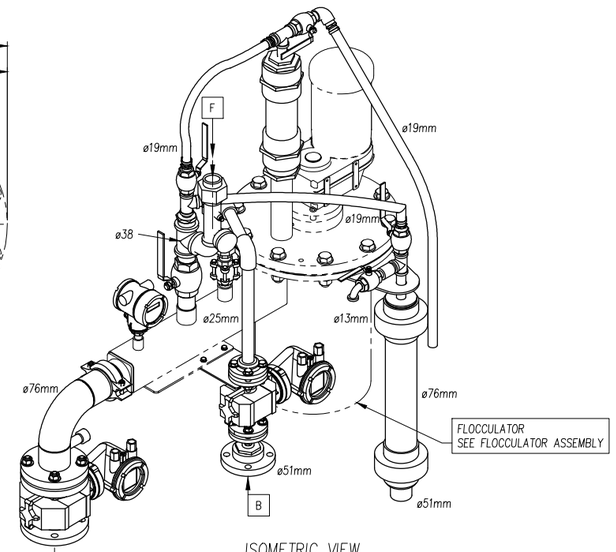

ISOMETRIC VIEW

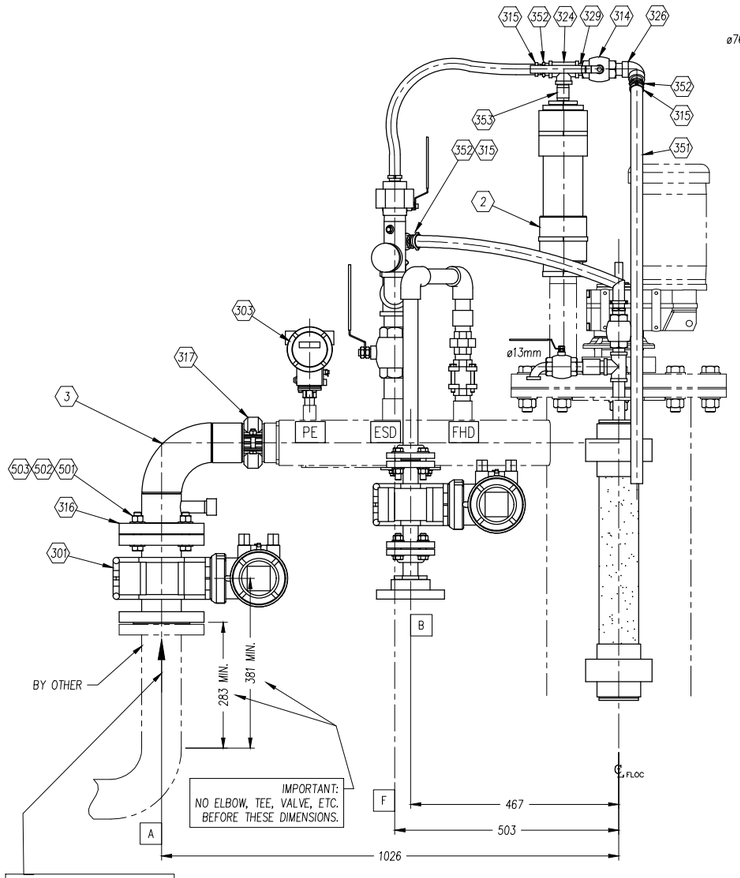

FRONT VIEW

IMPORTANT:
LIQUID MUST CIRCULATE FROM
BOTTOM TO TOP IN FLOWMETER.

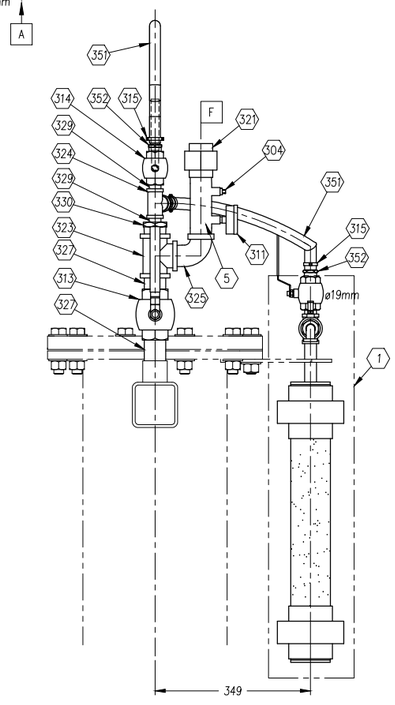

SECTION A

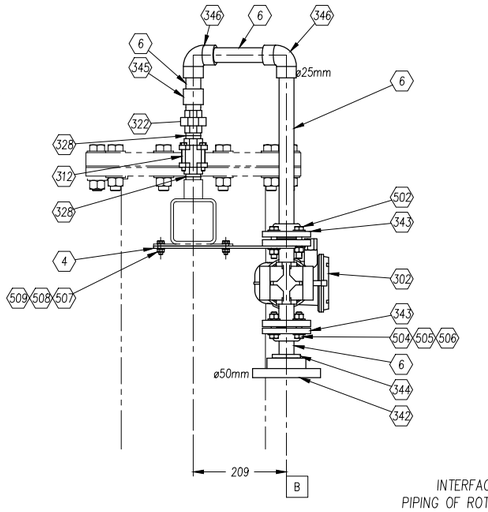

SECTION B

INTERFACE BETWEEN
PIPING OF ROTARY PRESS
AND CUSTOMER PIPING

A	SLUDGE INLET ø76.2mm– FLANGE
B	POLYMER INLET ø50.8mm– FLANGE
F	WASH WATER INLET ø38.1mm–NPT

(1) LA QUANTITÉ EST DONNÉE POUR UN ASSEMBLAGE / QUANTITY GIVEN IS FOR ONE ASSEMBLY.
(2) LA QUANTITÉ EST DONNÉE POUR UN ASSEMBLAGE EXCLUANT LES ARTICLES MARQUÉS D'UN ASTÉRISQUE / QUANTITY GIVEN FOR ONE ASSEMBLY EXCLUDING ITEMS MARKED WITH AN ASTERISK.

PEINTURE(m2) PAINT SURFACE(2)	0	CAOUTCHOUC(m2) RUBBER SURFACE(2)	0	PL.USURE(kg) WEIGHT OF LINERS(2)	0	POIDS TOT.(kg) TOT. WEIGHT(2)	52	REQUIS TOTAL TOTAL REQ'D	1

ARTICLE ITEM	REPÈRE REF.	NOMBRE QTY(1)	DÉSIGNATION / DESIGNATION	MATÉRIEL MATERIAL	POIDS(kg) WEIGHT UNIT.(1)	REMARQUES / NOTES - #1FI
1		1	FLOCCULATED SLUDGE SAMPLER	CLEAR PVC		1FI–01522
2		1	AIR BREATHER ø2"	PVC		1FI–01719
* 3		1	ø3" INLET ELBOW	S.S.316L		1FI–02144
4		1	FLOWMETER SUPPORT	S.S.316L		1FI–01799
5		1	PRESSURE GAUGE MANIFOLD	S.S.316L		1FI–02135
6		1	ø1" SCH.80 PIPE	PVC		TU16VC80KP.
* 301		1	ø3" SLUDGE FLOWMETER			E&H, END–5WBB80–24V
302		1	ø1" POLYMER FLOWMETER			E&H, END–5WBB25–24V
303		1	PRESSURE TRANSMITTER, 0–30 PSI, 4–20 MA			E&H, END–PMC71B–24V
304		1	ø1/4" HEX. PLUG	S.S.316		102469
311		1	PRESSURE GAUGE	S.S.		ROY–SSG–2502–160
312		1	ø1" NPT CHECK VALVE, CLASS 150#	S.S.		IFC 1"SC600TSSSSM 1FI–01939
313		1	ø1 1/2" NPT BALL VALVE FULL PORT	S.S.		C.F.F.# 1 1/2" SS–2 104616
314		2	ø3/4" NPT BALL VALVE FULL PORT	S.S.		C.F.F.# 3/4" SS–2 102517
315		5	"MIKALOR" CLAMP FOR HOSE ø1 1/16"	S.S.		W4–27–29 MIK–W4–27–29KP
* 316		1	ø3" CLASS 150# FLANGE			VICTAULIC STYLE 741W–741–3
* 317		1	ø3" RIGIDE COUPLING			VICTAULIC STYLE 07 VI–07–3
321		1	ø1 1/2" NPT HEX. UNION	S.S.316L		102449
322		1	ø1" NPT HEX. UNION	S.S.316L		102447
323		1	ø1 1/2" NPT, CLASS 150# TEE	S.S.316L		102443
324		2	ø3/4" NPT, 150# TEE	S.S.316L		102440
325		1	ø1 1/2" NPT STREET ELBOW 90°	S.S.316L		102597
326		1	ø3/4" NPT STREET ELBOW 90°	S.S.316L		102433
327		2	ø1 1/2" – 1 3/4" LG, SCH. 40, CLOSE NIPPLE	S.S.316L		102400
328		2	ø1" NPT – 1 1/2" LG, SCH. 40, CLOSE NIPPLE	S.S.316L		102393
329		3	ø3/4" NPT – 1 3/8" LG, SCH 40, CLOSE NIPPLE	S.S.316L		102388
330		1	ø1 1/2" NPT/M x ø3/4" NPT/F REDUCER	S.S.316L		102339
342		1	ø2" SCH. 80 SLIP FLANGE	PVC		LAS–851–020
343		2	ø1" SCH. 80 SLIP FLANGE	PVC		LAS–851–010
344		1	REDUCER ø2" SPIG TO ø1" SLIP	PVC		LAS–837–249
345		1	ø1"NPT/M x ø1" SLIP MALE ADAPTOR	PVC		LAS–836–010
346		2	ø1 SLIP x ø1" SLIP ELBOW 90°	PVC		LAS–806–010KP
351		1	ø3/4" x 120" LG, HOSE	BLACK EPDM		MAG–CWD150007KP
352		5	ø3/4" NPT/M – 3/4" BARB, HOSE ADAPTOR	S.S.316		1FI–02524
353		1	ø3/4" NPT – 2" LG, SCH. 40, HEX. NIPPLE	S.S.316		SWA–SS12HN
* 501		4	HEX. BOLT 5/8–11 X 3in SS 316			104204KP
* 502		4	HEX. NUT 5/8–11 SS 316			102069KP
* 503		8	FLAT WASHER M16 SS 316			100562KP
504		8	HEX. BOLT 1/2–13 X 2.25in SS 316			102134KP
505		8	NYLON–INSERT LOCKNUT 1/2–13 SS 316			102078KP
506		16	FLAT WASHER M12 SS 316			100561KP

Grand./Size D | Dessin No / Drawing No. 53381 | Page/Sheet 1 of 1 | Révision 00

No Projet / Project No. 2023-11911 | No Production / Job No. 23-8459

LÉGENDE/LEGEND

1 @ 299 = ASSEMBLAGES FABRIQUÉS / FABRICATED ASSEMBLY
300 @ 499 = COMPOSANTES MÉCANIQUE / MECHANICAL COMPONENTS
500 @ 699 = BOULONNERIE / BOLTS

NOTES GÉNÉRALES/GENERAL NOTES

FHD COUPLING ø25.4mm–NPT FOR POLYMER PIPE ø25.4mm

ESD COUPLING ø38.1mm–NPT FOR CLEANING WATER PIPE ø38.1mm

PE COUPLING ø12.7mm–NPT FOR PRESSURE TRANSMITTER

* SHIPPED LOOSE

NO.	REVISIONS	DATE (DD-MM-YY)	BY/PAR

THIRD ANGLE PROJECTION / PROJECTION TROISIEME ANGLE

SURFACE FINISH 125 / FINITION SURFACE

Tolérances sauf indications contraires/Tolerances unless otherwise stated

SYSTÈME IMPÉRIAL / IMPERIAL SYSTEM		SYSTÈME MÉTRIQUE / METRIC SYSTEM	
	0 - 36"		0 - 1000mm 1000mm +
FRACTION	± 1/16"	ENTIER / INTEGER	± 1 mm ± 2mm
2 PLACES .XX	± .010"	1 PLACES .X	± .50 mm
3 PLACES .XXX	± .005"	2 PLACES .XX	± .25 mm
ANGLES	± 1/2°	3 PLACES .XXX	± .125 mm

Ébavurer les arêtes vives (S.I.C.)/Deburring sharp edges (U.O.S)

Weld inspection according CSA W59 section 11 except otherwise noted
VT: 100% PT: As per symbol
UT: As per symbol MT: As per symbol
Sealed welds: 100% LT (leak test)
Lifting lugs: 100% MT , 100%VT

Inspection des soudures selon CSA W59 section 11 sauf indication contraire
VT: 100% PT: Selon symbole
UT: Selon symbole MT: Selon symbole
Soudures étanches: 100% LT (essai d'étanchéité)
Anneaux de levage: 100% MT , 100%VT

THIS DRAWING AND ALL THE INFORMATION IT CONTAINS ARE THE EXCLUSIVE PROPERTY OF LES INDUSTRIES FOURNIER INC. IT IS STRICTLY FORBIDDEN TO COMMUNICATE OR USE THE INFORMATION FOR PURPOSES OTHER THAN THE ORIGINAL INTENDED ONES OR IF THE USE COULD BE HARMFUL TO THE INTERESTS OF LES INDUSTRIES FOURNIER INC. THIS DRAWING OR ITS PART MAY NOT BE REPRODUCED IN ANY FASHION AND HAS TO BE RETURNED TO LES INDUSTRIES FOURNIER INC. UPON REQUEST.

CE DESSIN ET TOUTES LES INFORMATIONS Q'IL CONTIENT SONT LA PROPRIÉTÉ EXCLUSIVE DE LES INDUSTRIES FOURNIER INC. IL EST STRICTEMENT INTERDIT DE COMMUNIQUER OU UTILISER SON CONTENU À D'AUTRES FINS QUE CELLES PRÉVUES ORIGINALEMENT OU POUVANT ÊTRE PRÉJUDICIABLES AUX INTÉRÊTS DE LES INDUSTRIES FOURNIER INC. TOUTE REPRODUCTION DE CE DESSIN EST INTERDITE ET IL DOIT ÊTRE RETOURNÉ SUR DEMANDE.

Lire conjointement avec PRIE approuvé / Read in conjunction with the approved ITP

Par / Date (DD/MM/YY)	INVENT	MONT	ELEC						
ETAPES	1	2	3	4	5	6	7	8	9

23-8459

FLOCCULATOR # 2
TK–P3321

FOURNIER INDUSTRIES INC.
LES INDUSTRIES FOURNIER INC.
3787 BOUL. FRONTENAC, THETFORD-MINES
QUEBEC, CANADA, G6H-2B5

WINNIPEG, MB
DEWATERING SYSTEM
PIPING ARRANGEMENT
FLOCCULATOR # 2 TK-P3321 INLET SECTION (RIGHT ARR'T)
C/W 25.4mm(1") AND 76.2mm(3") FLOWMETERS

Dessiné / Drawn	Vérifié / Checked	Approuvé / Approved	No 1FI / 1FI No.
M.BERNIER	E.GAMACHE	D. CLICHE	
Date: 27-06-2023	Echelle / Scale: 1:6	No Équipement du Client / Customer Equipment No.: TK-P3321	

Grand./Size D | Dessin No / Drawing No. 53381 | Page/Sheet 1 of 1 | Révision 00

FQF084 (06-2017)

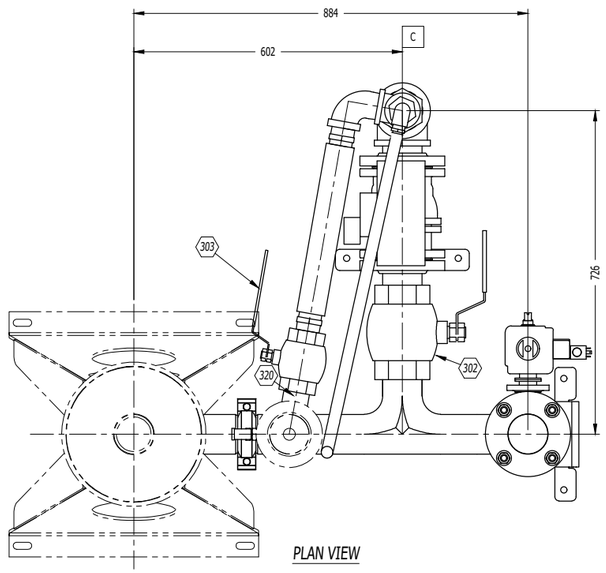

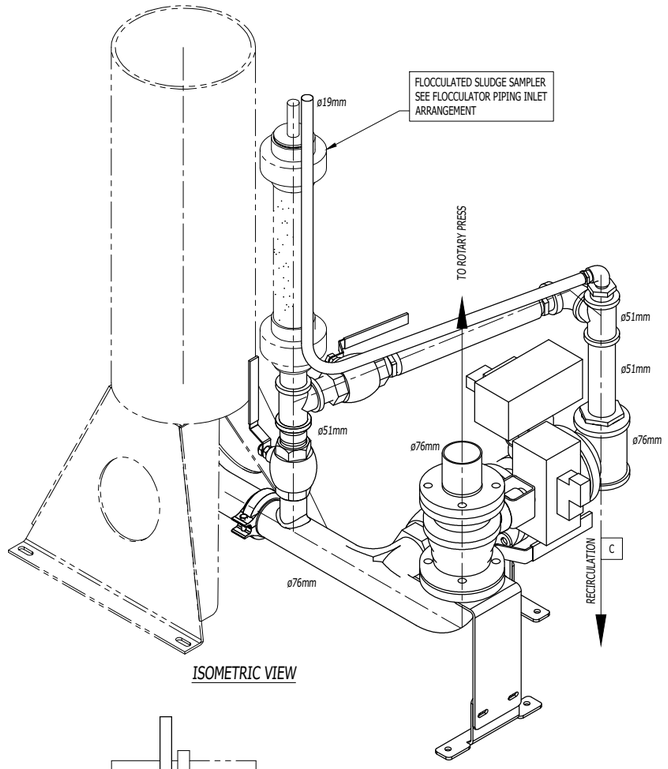

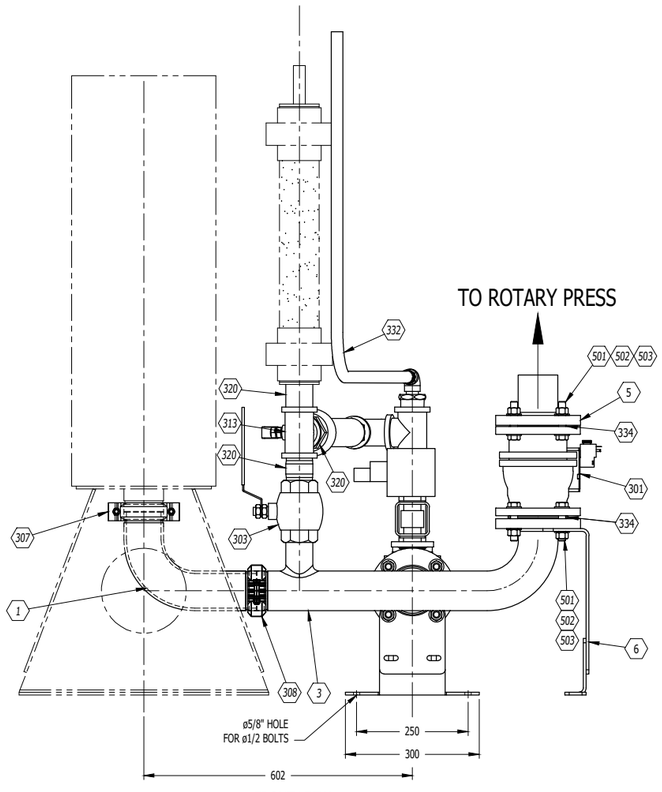

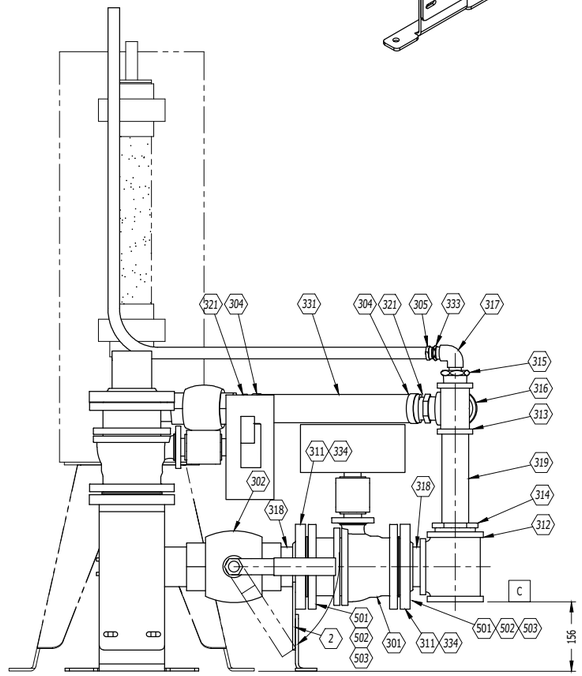

INTERFACE BETWEEN PIPING OF ROTARY PRESS AND CUSTOMER PIPING

C SLUDGE RECIRCULATION OUTLET ø76.2mm–NPT

ARTICLE ITEM	REPÈRE REF.	NOMBRE QTY(1)	DÉSIGNATION / DESIGNATION	MATÉRIEL MATERIAL	POIDS(kg) WEIGHT UNIT.(1)	REMARQUES / NOTES - #IFI
1		1	ø3" OUTLET ELBOW	S.S.316L		IFI-02085
2		1	ADJUSTABLE VALVE SUPPORT	S.S.316L		IFI-02232
3		1	ø3" - 2" - 3" TEE	S.S.316L		IFI-02126-GA
5		1	ø3" SLUDGE OUTLET ADAPTER	S.S.316L		IFI-02463
6		1	ADJUSTABLE VALVE SUPPORT	S.S.316L		IFI-02564
301		2	ø3" FLANGE, BALL VALVE FULL PORT, AMERICAN VALVE MODEL 4000	CAST IRON		IFI-02077-2017
			C/W PNEUMATIC ACTUATOR FESTO			IFI-02175-2017
302		1	ø3" NPT BALL FULL PORT	S.S.316L		C.F.F. # 3" SS-2 102521
303		2	ø2" NPT BALL FULL PORT	S.S.316L		C.F.F. # 2" SS-2 102520
304		2	"MIKALOR" CLAMP FOR HOSE ø2.3"	S.S.		MIK-W4-59-63KP
305		1	"MIKALOR" CLAMP FOR HOSE ø1 1/16"	S.S.		MIK-W4-27-29KP
307		1	ø3" FLEXIBLE COUPLING	CAST IRON		VICTAULIC STYLE 77 VI-77-3
308		1	ø3" RIGIDE COUPLING	CAST IRON		VICTAULIC STYLE 07 VI-07-3
311		2	ø3" CLASS 150# THREADED FLANGE	S.S.316L		104216
312		1	ø3"NPT, 150#, TEE	S.S.316L		111335
313		2	ø2"NPT, 150#, TEE	S.S.316L		102444
314		1	ø3"NPT/M x ø2" NPT/F HEX. REDUCER	S.S.316L		104173
315		1	ø2"NPT/M x ø3/4" NPT/F HEX. REDUCER	S.S.316L		102342
316		1	ø2"NPT STREET ELBOW 90°	S.S.316L		102435
317		1	ø3/4"NPT STREET ELBOW 90°	S.S.316L		102433
318		2	ø3" x 3"LG, SCH. 40, SHORT NIPPLE	S.S.316L		102413
319		1	ø2" x 8"LG, SCH. 40, NIPPLE	S.S.316L		104934
320		3	ø2" x 3"LG, SCH. 40, NIPPLE	S.S.316L		102408
321		2	ø2"NPT/M x ø2" HOSE BARB, ADAPTER	S.S.316L		AMI-CNT-200-SS
331		1	ø2" x 17 1/16" HOSE, 150 PSI	RUBBER		MAG-CWD150020KP
332		1	ø3/4" HOSE	BLACK EPDM		MAG-CWD150007KP
333		1	ø3/4"NPT/M x ø3/4" HOSE BARB, ADAPTER	S.S.316		IFI-02524
334		4	GASKET 1/8" X 3 3/8" I.D. X 5 5/16" O.D.	SBR		IFI-01722
501		16	HEX. BOLT 5/8-11 X 3in SS 316			104204KP
502		16	HEX. NUT 5/8-11 SS 316			102069KP
503		32	FLAT WASHER M16 SS 316			100562KP

FLOCCULATOR # 1
TK-P3311

(1) LA QUANTITÉ EST DONNÉE POUR UN ASSEMBLAGE / QUANTITY GIVEN IS FOR ONE ASSEMBLY.
(2) LA QUANTITÉ EST DONNÉE POUR UN ASSEMBLAGE EXCLUANT LES ARTICLES MARQUÉS D'UN ASTÉRISQUE / QUANTITY GIVEN FOR ONE ASSEMBLY EXCLUDING ITEMS MARKED WITH AN ASTERISK.

PEINTURE(m2) PAINT SURFACE(2)	0	CAOUTCHOUC(m2) RUBBER SURFACE(2)	0	PL.USURE(kg) WEIGHT OF LINERS(2)	0	POIDS TOT.(kg) TOT. WEIGHT(2)	109	REQUIS TOTAL TOTAL REQ'D	1

Grand./Size D | Dessin No / Drawing No. 53382 | Page/Sheet 1 of 1 | Révision 00

No Projet / Project No. 2023-11911 | No Production / Job No. 23-8458

LÉGENDE/LEGEND
1 @ 299 = ASSEMBLAGES FABRIQUÉS / FABRICATED ASSEMBLY
300 @ 499 = COMPOSANTES MÉCANIQUE / MECHANICAL COMPONENTS
500 @ 699 = BOULONNERIE / BOLTS

NOTES GÉNÉRALES/GENERAL NOTES

NO.	REVISIONS	DATE DD-MM-YY	BY/PAR

THIRD ANGLE PROJECTION
PROJECTION TROISIEME ANGLE

SURFACE FINISH 125 FINITION SURFACE

Tolérances sauf indications contraires/Tolerances unless otherwise stated
SYSTÈME IMPÉRIAL / IMPERIAL SYSTEM SYSTÈME MÉTRIQUE / METRIC SYSTEM

	0 - 36"	36" +		0 - 1000mm	1000mm +
FRACTION	± 1/16"	± 1/8"	ENTIER / INTEGER	± 1 mm	± 2mm
2 PLACES .XX	± .010"	—	1 PLACES .X	± .50 mm	=
3 PLACES .XXX	± .005"	=	2 PLACES .XX	± .25 mm	=
ANGLES		± 1/2°	3 PLACES .XXX	± .125 mm	=

Ébavurer les arêtes vives (S.I.C.)/Deburring sharp edges (U.O.S)

Weld inspection according CSA W59 section 11 except otherwise noted
VT: 100% PT: As per symbol
UT: As per symbol MT: As per symbol
Sealed welds: 100% LT (leak test)
Lifting lugs: 100% MT , 100%VT

Inspection des soudures selon CSA W59 section 11 sauf indication contraire
VT: 100% PT: Selon symbole
UT: Selon symbole MT: Selon symbole
Soudures étanches: 100% LT (essai d'étanchéité)
Anneaux de levage: 100% MT , 100%VT

THIS DRAWING AND ALL THE INFORMATION IT CONTAINS ARE THE EXCLUSIVE PROPERTY OF LES INDUSTRIES FOURNIER INC. IT IS STRICTLY FORBIDDEN TO COMMUNICATE OR USE THE INFORMATION FOR PURPOSES OTHER THAN THE ORIGINAL INTENDED ONES OR IF THE USE COULD BE HARMFUL TO THE INTERESTS OF LES INDUSTRIES FOURNIER INC. THIS DRAWING IN WHOLE OR IN PART MAY NOT BE REPRODUCED IN ANY FASHION AND HAS TO BE RETURNED TO LES INDUSTRIES FOURNIER INC. UPON REQUEST

CE DESSIN ET TOUTES LES INFORMATIONS QUYIL CONTIENT SONT LA PROPRIETE EXCLUSIVE DE LES INDUSTRIES FOURNIER INC. IL EST STRICTEMENT INTERDIT DE COMMUNIQUER OU UTILISER SON CONTENU A D'AUTRES FINS QUE CELLES PERVISES ORIGINALEMENT OU POUVANT ETRE PREJUDICIABLES AUX INTERETS DE LES INDUSTRIES FOURNIER INC. TOUTE REPRODUCTION DE CE DESSIN EST INTERDITE ET IL DOIT ETRE RETOURNE SUR DEMANDE

Lire conjointement avec PRIE approuvé / Read in conjunction with the approved ITP

Par	Date (DD/MM/YY)	INVENT	MONT	ELEC						
ETAPES		1	2	3	4	5	6	7	8	9

23-8458

FOURNIER INDUSTRIES INC.
LES INDUSTRIES FOURNIER INC.
3787 BOUL. FRONTENAC, THETFORD-MINES
QUÉBEC, CANADA, G6H-2B5

WINNIPEG, MB
DEWATERING SYSTEM
PIPING ARRANGEMENT
FLOCCULATOR # 1 TK-P3311 OUTLET SECTION
C/W 2 WAYS BALL VALVE

Dessiné / Drawn	Vérifié / Checked	Approuvé / Approved	No IFI / IFI No.
M.BERNIER	E.GAMACHE	D. CLICHE	
Date 27-06-2023	Echelle / Scale 1:6	No Équipement du Client / Customer Equipment No. TK-P3311	

Grand./Size D | Dessin No / Drawing No. 53382 | Page/Sheet 1 of 1 | Révision 00

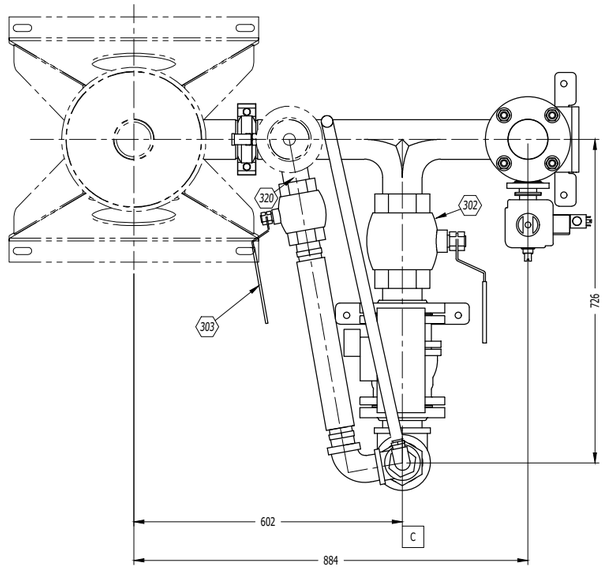

PLAN VIEW

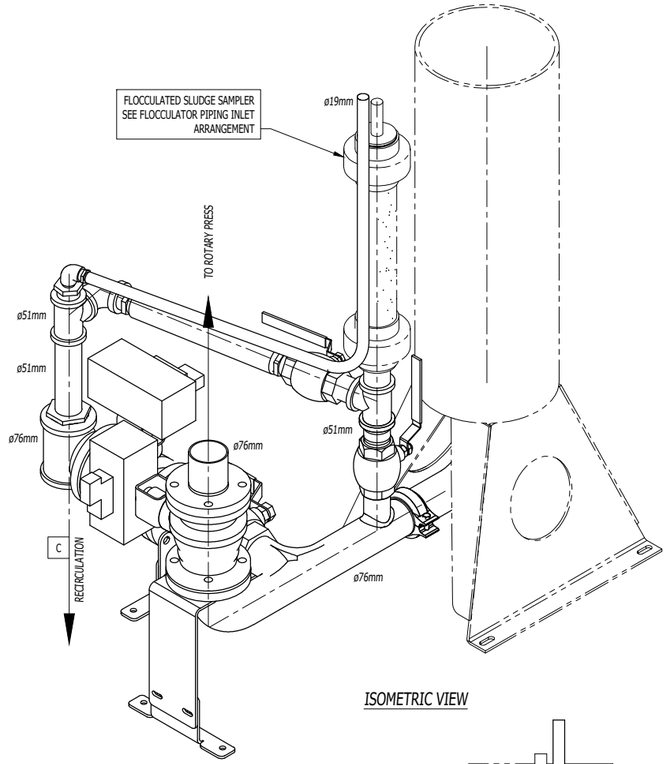

ISOMETRIC VIEW

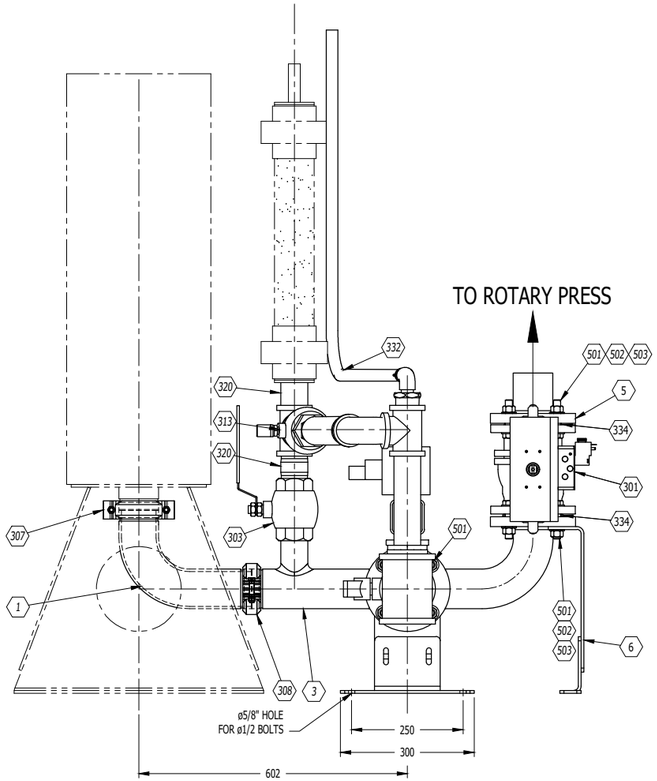

FRONT VIEW

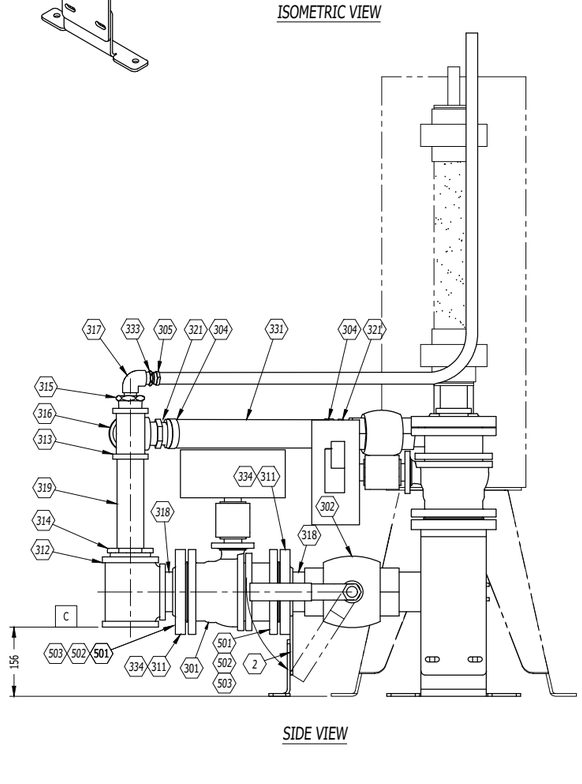

SIDE VIEW

INTERFACE BETWEEN PIPING OF ROTARY PRESS AND CUSTOMER PIPING

C SLUDGE RECIRCULATION OUTLET ø76.2mm–NPT

ARTICLE ITEM	REPÈRE REF.	NOMBRE QTY(1)	DÉSIGNATION / DESIGNATION	MATÉRIEL MATERIAL	POIDS(kg) WEIGHT UNIT.(1)	REMARQUES / NOTES - #IFI	AUTRES
1		1	ø3" OUTLET ELBOW	S.S.316L		IFI-02085	
2		1	ADJUSTABLE VALVE SUPPORT	S.S.316L		IFI-02232	
3		1	ø3" - 2" - 3" TEE	S.S.316L		IFI-02126-DR	
5		1	ø3" SLUDGE OUTLET ADAPTER	S.S.316L		IFI-02463	
6		1	ADJUSTABLE VALVE SUPPORT	S.S.316L		IFI-02564	
301		2	ø3" FLANGE, BALL VALVE FULL PORT, AMERICAN VALVE MODEL 4000	CAST IRON		IFI-02077-2017	
			C/W PNEUMATIC ACTUATOR FESTO			IFI-02175-2017	
302		1	ø3" NPT BALL FULL PORT	S.S.316L		C.F.F. # 3" SS-2 102521	
303		2	ø2" NPT BALL FULL PORT	S.S.316L		C.F.F. # 2" SS-2 102520	
304		2	"MIKALOR" CLAMP FOR HOSE ø2.3"	S.S.		MIK-W4-59-63KP	
305		1	"MIKALOR" CLAMP FOR HOSE ø1 1/16"	S.S.		MIK-W4-27-29KP	
307		1	ø3" FLEXIBLE COUPLING	CAST IRON		VICTAULIC STYLE 77 VI-77-3	
308		1	ø3" RIGIDE COUPLING	CAST IRON		VICTAULIC STYLE 07 VI-07-3	
311		2	ø3" CLASS 150# THREADED FLANGE	S.S.316L		104216	
312		1	ø3"NPT, 150#, TEE	S.S.316L		111335	
313		2	ø2"NPT, 150#, TEE	S.S.316L		102444	
314		1	ø3"NPT/M x ø2" NPT/F HEX. REDUCER	S.S.316L		104173	
315		1	ø2"NPT/M x ø3/4" NPT/F HEX. REDUCER	S.S.316L		102342	
316		1	ø2"NPT STREET ELBOW 90°	S.S.316L		102435	
317		1	ø3/4"NPT STREET ELBOW 90°	S.S.316L		102433	
318		2	ø3" x 3"LG, SCH. 40, SHORT NIPPLE	S.S.316L		102413	
319		1	ø2" x 8"LG, SCH. 40, NIPPLE	S.S.316L		104934	
320		3	ø2" x 3"LG, SCH. 40, NIPPLE	S.S.316L		102408	
321		2	ø2"NPT/M x ø2" HOSE BARB, ADAPTER	S.S.316L		AMI-CNT-200-SS	
331		1	ø2" x 17 1/16" HOSE, 150 PSI	RUBBER		MAG-CWD150020KP	
332		1	ø3/4" HOSE	BLACK EPDM		MAG-CWD150007KP	
333		1	ø3/4"NPT/M x ø3/4" HOSE BARB, ADAPTER	S.S.316		IFI-02524	
334		4	GASKET 1/8" X 3 3/8" I.D. X 5 5/16" O.D.	SBR		IFI-01722	
501		16	HEX. BOLT 5/8-11 X 3in SS 316			104204KP	
502		16	HEX. NUT 5/8-11 SS 316			102069KP	
503		32	FLAT WASHER M16 SS 316			100562KP	

FLOCCULATOR # 2
TK-P3321

(1) LA QUANTITÉ EST DONNÉE POUR UN ASSEMBLAGE / QUANTITY GIVEN IS FOR ONE ASSEMBLY.
(2) LA QUANTITE EST DONNÉE POUR UN ASSEMBLAGE EXCLUANT LES ARTICLES MARQUÉS D'UN ASTÉRISQUE / QUANTITY GIVEN FOR ONE ASSEMBLY EXCLUDING ITEMS MARKED WITH AN ASTERISK.

PEINTURE(m2) PAINT SURFACE(2)	0	CAOUTCHOUC(m2) RUBBER SURFACE(2)	0	PL.USURE(kg) WEIGHT OF LINERS(2)	0	POIDS TOT.(kg) TOT. WEIGHT(2)	109	REQUIS TOTAL TOTAL REQ'D	1

Grand./Size D | Dessin No / Drawing No. 53383 | Page/Sheet 1 of 1 | Révision 00

No Projet / Project No. 2023-11911 | No Production / Job No. 23-8459

LÉGENDE/LEGEND
1 @ 299 = ASSEMBLAGES FABRIQUÉS / FABRICATED ASSEMBLY
300 @ 499 = COMPOSANTES MÉCANIQUE / MECHANICAL COMPONENTS
500 @ 699 = BOULONNERIE / BOLTS

NOTES GÉNÉRALES/GENERAL NOTES

NO.	REVISIONS	DATE DD-MM-YY	BY/PAR

THIRD ANGLE PROJECTION
PROJECTION TROISIEME ANGLE

SURFACE FINISH 125 / FINITION SURFACE

Tolérances sauf indications contraires/Tolerances unless otherwise stated

SYSTÈME IMPÉRIAL / IMPERIAL SYSTEM			SYSTÈME MÉTRIQUE / METRIC SYSTEM	
	0 - 36"	36" +	0 - 1000mm	1000mm +
FRACTION	± 1/16"	± 1/8"	ENTIER / INTEGER ± 1 mm	± 2mm
2 PLACES .XX	± .010"	—	1 PLACES .X ± .50 mm	—
3 PLACES .XXX	± .005"	=	2 PLACES .XX ± .25 mm	=
ANGLES	± 1/2°		3 PLACES .XXX ± .125 mm	

Ébavurer les arêtes vives (S.I.C.)/Deburring sharp edges (U.O.S)

Weld inspection according CSA W59 section 11 except otherwise noted
VT: 100% PT: As per symbol
UT: As per symbol MT: As per symbol
Sealed welds: 100% LT (leak test)
Lifting lugs: 100% MT , 100%VT

Inspection des soudures selon CSA W59 section 11 sauf indication contraire
VT: 100% PT: Selon symbole
UT: Selon symbole MT: Selon symbole
Soudures étanches: 100% LT (essai d'étanchéité)
Anneaux de levage: 100% MT , 100%VT

THIS DRAWING AND ALL THE INFORMATION IT CONTAINS ARE THE EXCLUSIVE PROPERTY OF LES INDUSTRIES FOURNIER INC. IT IS STRICTLY FORBIDDEN TO COMMUNICATE OR USE THE INFORMATION FOR PURPOSES OTHER THAN THE ORIGINAL INTENDED ONES OR IF THE USE COULD BE HARMFUL TO THE INTERESTS OF LES INDUSTRIES FOURNIER INC. THIS DRAWING IN WHOLE OR IN PART MAY NOT BE REPRODUCED IN ANY FASHION AND HAS TO BE RETURNED TO LES INDUSTRIES FOURNIER INC. UPON REQUEST.

CE DESSIN ET TOUTES LES INFORMATIONS QU'IL CONTIENT SONT LA PROPRIETE EXCLUSIVE DE LES INDUSTRIES FOURNIER INC. IL EST STRICTEMENT INTERDIT DE COMMUNIQUER OU UTILISER SON CONTENU A D'AUTRES FINS QUE CELLES PREVUES ORIGINALEMENT OU POUVANT ETRE PREJUDICIABLES AUX INTERETS DE LES INDUSTRIES FOURNIER INC. TOUTE REPRODUCTION DE CE DESSIN EST INTERDITE ET IL DOIT ETRE RETOURNE SUR DEMANDE.

Lire conjointement avec PRIE approuvé / Read in conjunction with the approved ITP

Par	Date (DD/MM/YY)	INVENT	MONT	ELEC						
ETAPES		1	2	3	4	5	6	7	8	9

23-8459

FOURNIER INDUSTRIES INC.
LES INDUSTRIES FOURNIER INC.
3787 BOUL. FRONTENAC, THETFORD-MINES
QUEBEC, CANADA, G6H-2B5

WINNIPEG, MB
DEWATERING SYSTEM
PIPING ARRANGEMENT
FLOCCULATOR # 2 TK-P3321 OUTLET SECTION
C/W 2 WAYS BALL VALVE

Dessiné / Drawn	Vérifié / Checked	Approuvé / Approved	No IFI / IFI No.
M.BERNIER	E.GAMACHE	D. CLICHE	
Date 27-06-2023	Echelle / Scale 1:6	No Équipement du Client / Customer Equipment No. TK-P3321	

Grand./Size D | Dessin No / Drawing No. 53383 | Page/Sheet 1 of 1 | Révision 00

FQF084 (08-2017)

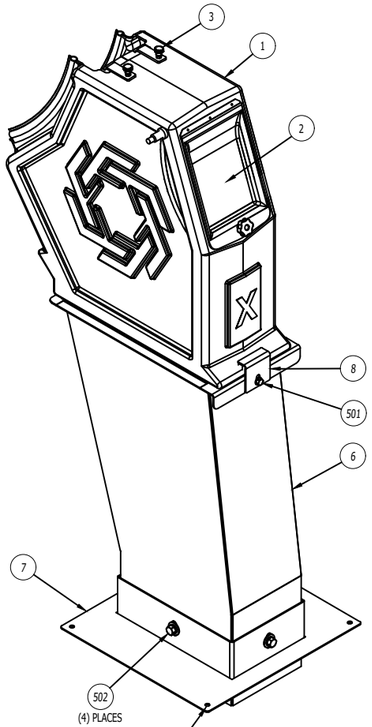

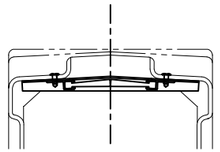

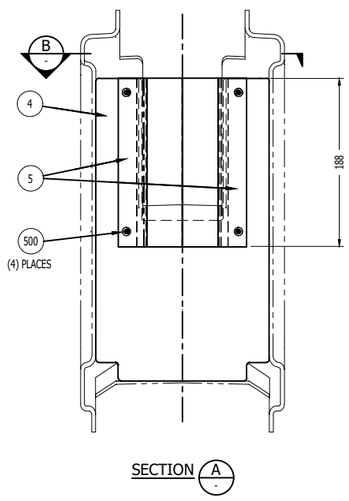

where is this? what does it do?

ARTICLE ITEM	REPÈRE REF.	NOMBRE QTY(1)	DÉSIGNATION / DESIGNATION	MATÉRIEL MATERIAL	POIDS(kg) WEIGHT UNIT.(1)	REMARQUES / NOTES - #IFI	✓	AVIS/REVISIONS
1		1	BODY OF CHUTE	LLDPE	5.5	IFI-02151		
2		1	DOOR	LLDPE	0.3	IFI-01935-2-ASS		
3		1	DEFLECTOR	S.S.304L	0.8	IFI-02462		
4		1	CAKE SLIDE	S.S.304L	0.3	IFI-02572		
5		2	BRUSH ASSEMBLY + BRACKET		0.2	IFI-02571		
6		1	CHUTE EXTENSION	S.S.304L	27.3			
7		1	ADJUSTABLE CHUTE EXTENSION FLOOR PLATE	S.S.304L	6.6			
8		1	CHUTE BLOCKER	S.S.304L	0.1			
300		1	CAKE DETECTOR - SCHNEIDER #XT218A1PCM12	PLASTIC		IFI-02165		
500		4	LARGE Ø DOMED HEAD Ø1/4" (0.376"-0.5" THK MAT)	ALUMINUM		#117952		
501		1	HEX. BOLT Ø3/8"-16nc X 1" LG.	S.S.316L		C/W (1) H.N. (1) F.W. & (1) L.W.		
502		4	HEX. BOLT Ø1/2"-13nc X 1 1/4" LG.	S.S.316L		C/W (1) F.W. & (1) L.W.		

CAKE CHUTES FOR PRESS #RP-P3322

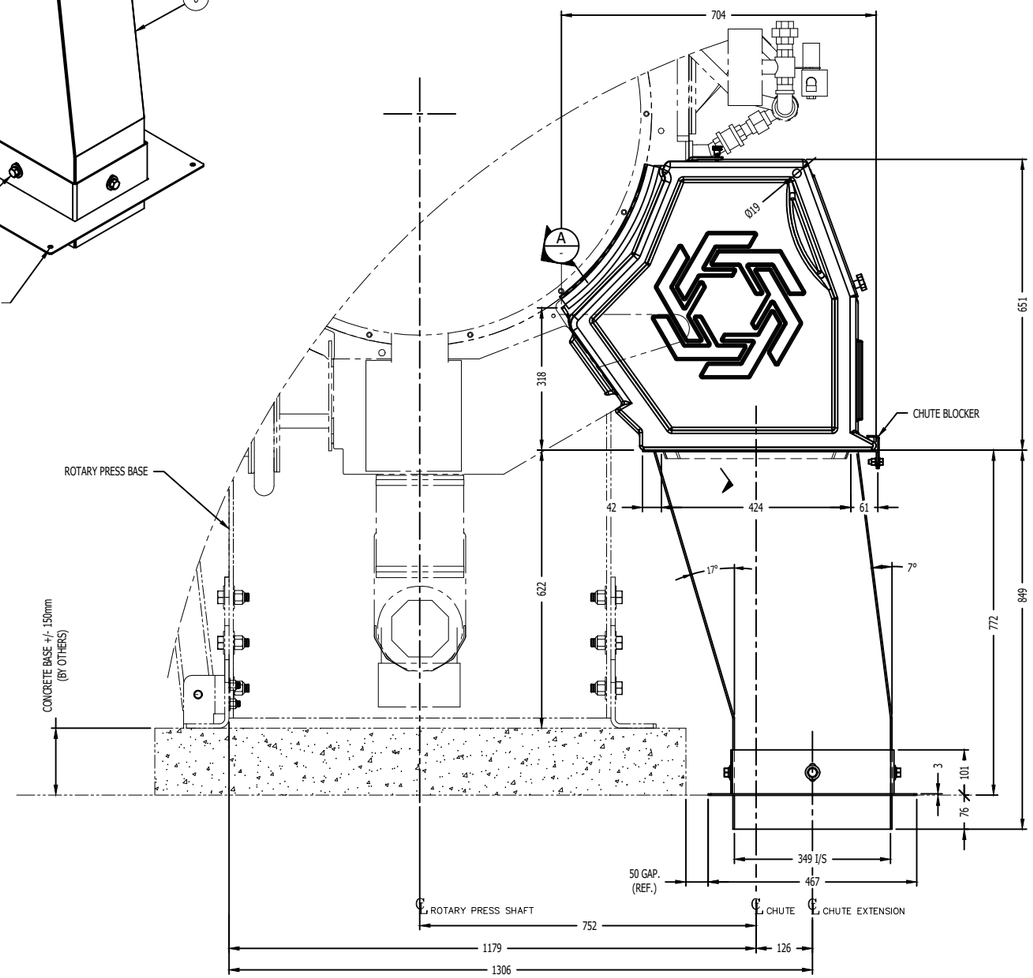

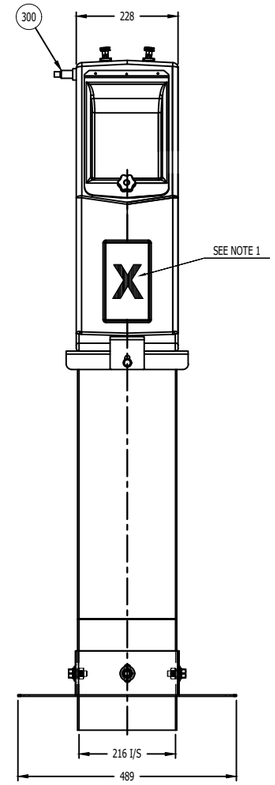

(1) LA QUANTITÉ EST DONNÉE POUR UN ASSEMBLAGE / QUANTITY GIVEN IS FOR ONE ASSEMBLY.
(2) LA QUANTITÉ EST DONNÉE POUR UN ASSEMBLAGE EXCLUANT LES ARTICLES MARQUÉS D'UN ASTÉRISQUE / QUANTITY GIVEN FOR ONE ASSEMBLY EXCLUDING ITEMS MARKED WITH AN ASTERISK.

PEINTURE(m2) PAINT SURFACE(2)	0	CAOUTCHOUC(m2) RUBBER SURFACE(2)	0	PL.USURE(kg) WEIGHT OF LINERS(2)	0	POIDS TOT.(kg) TOT. WEIGHT(2)	41	REQUIS TOTAL TOTAL REQ'D	3

Grand./Size D | Dessin No / Drawing No. 53384 | Page/Sheet 1 of 1 | Révision 00

No Projet / Project No. 2023-11911 | No Production / Job No. 23-8456

LÉGENDE/LEGEND

1 @ 299 = ASSEMBLAGES FABRIQUÉS / FABRICATED ASSEMBLY
300 @ 499 = COMPOSANTES MÉCANIQUE / MECHANICAL COMPONENTS
500 @ 699 = BOULONNERIE / BOLTS

NOTES GÉNÉRALES/GENERAL NOTES

NOTES:
1-THE CHUTES WILL BE IDENTIFIED BY THE NUMBERS 1 TO 3.
2-REMOVABLE CHUTE DEVICE WEIGHT: 6 Kg app.

NO.	REVISIONS	DATE DD-MM-YY	BY/PAR

THIRD ANGLE PROJECTION
PROJECTION TROISIEME ANGLE

SURFACE FINISH / FINITION SURFACE 125

Tolérances sauf indications contraires/Tolerances unless otherwise stated
SYSTÈME IMPÉRIAL / IMPERIAL SYSTEM — SYSTÈME MÉTRIQUE / METRIC SYSTEM

FRACTION	± 1/16"	± 1/8"	ENTIER / INTEGER	± 1 mm	± 2mm
2 PLACES .XX	± .010"		1 PLACES .X	± .50 mm	
3 PLACES .XXX	± .005"		2 PLACES .XX	± .25 mm	
ANGLES		± 1/2°	3 PLACES .XXX	± .125 mm	

0 - 36° / 36° ± / 0 - 1000mm / 1000mm ±

Ébavurer les arêtes vives (S.I.C.)/Deburring sharp edges (U.O.S)

Weld inspection according CSA W59 section 11 except otherwise noted
VT: 100% PT: As per symbol
UT: As per symbol MT: As per symbol
Sealed welds: 100% LT (leak test)
Lifting lugs: 100% MT , 100%VT

Inspection des soudures selon CSA W59 section 11 sauf indication contraire
VT: 100% PT: Selon symbole
UT: Selon symbole MT: Selon symbole
Soudures étanches: 100% LT (essai d'étanchéité)
Anneaux de levage: 100% MT , 100%VT

THIS DRAWING AND ALL THE INFORMATION IT CONTAINS ARE THE EXCLUSIVE PROPERTY OF LES INDUSTRIES FOURNIER INC. IT IS STRICTLY FORBIDDEN TO COMMUNICATE OR USE THE INFORMATION FOR PURPOSES OTHER THAN THE ORIGINAL INTENDED ONES OR IF THE USE COULD BE HARMFUL TO THE INTERESTS OF LES INDUSTRIES FOURNIER INC. THIS DRAWING IN WHOLE OR IN PART MAY NOT BE REPRODUCED IN ANY FASHION AND HAS TO BE RETURNED TO LES INDUSTRIES FOURNIER INC. UPON REQUEST.

CE DESSIN ET TOUTES LES INFORMATIONS QUI'IL CONTIENT SONT LA PROPRIÉTÉ EXCLUSIVE DE LES INDUSTRIES FOURNIER INC. IL EST STRICTEMENT INTERDIT DE COMMUNIQUER OU UTILISER CES INFORMATIONS À DES FINS AUTRES QUE CELLES PRÉVUES ORIGINALEMENT OU POUVANT ÊTRE PRÉJUDICIABLE AUX INTÉRÊTS DE LES INDUSTRIES FOURNIER INC. TOUTE REPRODUCTION DE CE DESSIN EST INTERDITE ET IL DOIT ÊTRE RETOURNÉ SUR DEMANDE.

Lire conjointement avec PRIE approuvé / Read in conjunction with the approved ITP

Par	Date (DD/MM/YY)	MONT	ELEC							
ETAPES		1	2	3	4	5	6	7	8	9

23-8456

Fournier
FOURNIER INDUSTRIES INC.
LES INDUSTRIES FOURNIER INC.
3787 BOUL. FRONTENAC, THETFORD-MINES
QUÉBEC, CANADA, G6H-2B5

WINNIPEG, MB
DEWATERING SYSTEM
ROTARY PRESS Ø900mm CVP
LLDPE CAKE CHUTE WITH SS304L CHUTE EXTENSION
ARRANGEMENT

Dessiné / Drawn	Vérifié / Checked	Approuvé / Approved	No IFI / IFI No.
S.LEBEL	E.GAMACHE	D.CLICHE	
Date 26/06/2023	Echelle / Scale 1:6	No Équipement du Client / Customer Equipment No.	

Grand./Size D | Dessin No / Drawing No. 53384 | Page/Sheet 1 of 1 | Révision 00

FQF084 (06-2017)

ARTICLE ITEM	REPÈRE REF.	NOMBRE QTY(1)	DÉSIGNATION / DESIGNATION	MATÉRIEL MATERIAL	POIDS(kg) WEIGHT UNIT.(1)	REMARQUES / NOTES - #IFI	✓	AUTRES OTHERS
1		1	BODY OF CHUTE	LLDPE	5.5	IFI-02151		
2		1	DOOR	LLDPE	0.3	IFI-01935-2-ASS		
3		1	DEFLECTOR	S.S.304L	0.8	IFI-02462		
4		1	CAKE SLIDE	S.S.304L	0.3	IFI-02572		
5		2	BRUSH ASSEMBLY + BRACKET		0.2	IFI-02571		
6		1	CHUTE EXTENSION	S.S.304L	27.3			
7		1	ADJUSTABLE CHUTE EXTENSION FLOOR PLATE	S.S.304L	6.6			
8		1	CHUTE BLOCKER	S.S.304L	0.1			
300		1	CAKE DETECTOR - SCHNEIDER #XT218A1PCM12	PLASTIC		IFI-02165		
500		4	LARGE Ø DOMED HEAD Ø1/4" (0.376"-0.5" THK MAT)	ALUMINUM		#117952		
501		1	HEX. BOLT Ø3/8"-16nc X 1" LG.	S.S.316L		C/W (1) H.N. (1) F.W. & (1) L.W.		
502		4	HEX. BOLT Ø1/2"-13nc X 1 1/4" LG.	S.S.316L		C/W (1) F.W. & (1) L.W.		

CAKE CHUTES FOR PRESS #RP-P3312

separate chutes for each channel will have to merge into one outlet to a single bin

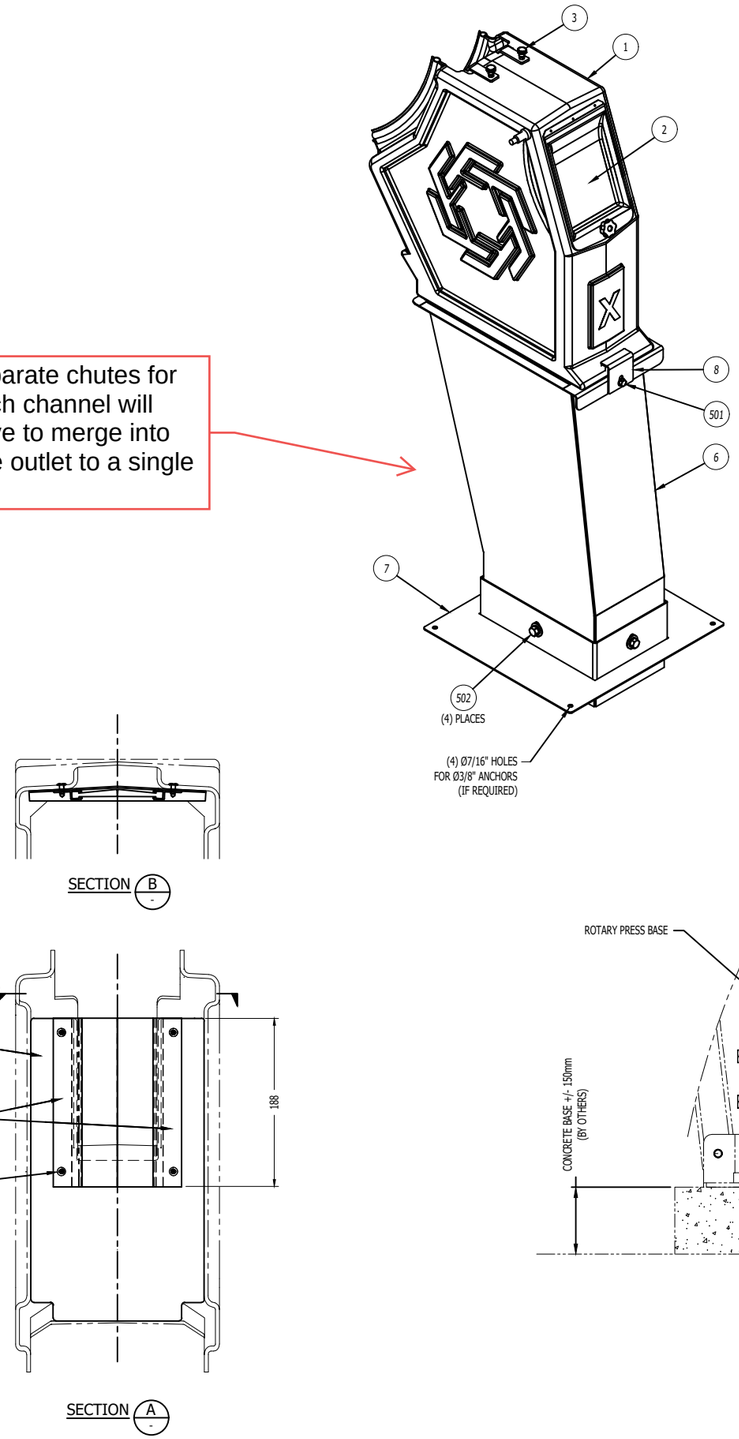

(1) LA QUANTITÉ EST DONNÉE POUR UN ASSEMBLAGE / QUANTITY GIVEN IS FOR ONE ASSEMBLY.
(2) LA QUANTITÉ EST DONNÉE POUR UN ASSEMBLAGE EXCLUANT LES ARTICLES MARQUÉS D'UN ASTÉRISQUE / QUANTITY GIVEN FOR ONE ASSEMBLY EXCLUDING ITEMS MARKED WITH AN ASTERISK.

PEINTURE(m2) PAINT SURFACE(2)	0	CAOUTCHOUC(m2) RUBBER SURFACE(2)	0	PL.USURE(kg) WEIGHT OF LINERS(2)	0	POIDS TOT.(kg) TOT. WEIGHT(2)	41	REQUIS TOTAL TOTAL REQ'D	3

Grand./Size D | Dessin No / Drawing No. 53385 | Page/Sheet 1 of 1 | Révision 00

No Projet / Project No. 2023-11911 | No Production / Job No. 23-8457

LÉGENDE/LEGEND
1 @ 299 = ASSEMBLAGES FABRIQUÉS / FABRICATED ASSEMBLY
300 @ 499 = COMPOSANTES MÉCANIQUE / MECHANICAL COMPONENTS
500 @ 699 = BOULONNERIE / BOLTS

NOTES GÉNÉRALES/GENERAL NOTES

NOTES:
1-THE CHUTES WILL BE IDENTIFIED BY THE NUMBERS 2 TO 4.
2-REMOVABLE CHUTE DEVICE WEIGHT: 6 Kg app.

NO.	REVISIONS	DATE DD-MM-YY	BY/PAR

THIRD ANGLE PROJECTION
PROJECTION TROISIEME ANGLE

SURFACE FINISH / FINITION SURFACE 125

Tolérances sauf indications contraires/Tolerances unless otherwise stated
SYSTÈME IMPÉRIAL / IMPERIAL SYSTEM — SYSTÈME MÉTRIQUE / METRIC SYSTEM

FRACTION	± 1/16"	± 1/8"	ENTIER / INTEGER	± 1 mm	± 2mm
2 PLACES .XX	± .010"		1 PLACES .X	± .50 mm	
3 PLACES .XXX	± .005"		2 PLACES .XX	± .25 mm	
ANGLES		± 1/2°	3 PLACES .XXX	± .125 mm	

0 - 36° / 36° + / 0 - 1000mm / 1000mm +

Ébavurer les arêtes vives (S.I.C.)/Deburring sharp edges (U.O.S)

Weld inspection according CSA W59 section 11 except otherwise noted
VT: 100% PT: As per symbol
UT: As per symbol MT: As per symbol
Sealed welds: 100% LT (leak test)
Lifting lugs: 100% MT , 100%VT

Inspection des soudures selon CSA W59 section 11 sauf indication contraire
VT: 100% PT: Selon symbole
UT: Selon symbole MT: Selon symbole
Soudures étanches: 100% LT (essai d'étanchéité)
Anneaux de levage: 100% MT , 100%VT

THIS DRAWING AND ALL THE INFORMATION IT CONTAINS ARE THE EXCLUSIVE PROPERTY OF LES INDUSTRIES FOURNIER INC. IT IS STRICTLY FORBIDDEN TO COMMUNICATE OR USE THE INFORMATION FOR PURPOSES OTHER THAN THE ORIGINAL INTENDED ONES OR IF THE USE COULD BE HARMFUL TO THE INTERESTS OF LES INDUSTRIES FOURNIER INC. THIS DRAWING IN WHOLE OR IN PART MAY NOT BE REPRODUCED IN ANY FASHION AND HAS TO BE RETURNED TO LES INDUSTRIES FOURNIER INC. UPON REQUEST.

CE DESSIN ET TOUTES LES INFORMATIONS QUI'IL CONTIENT SONT LA PROPRIÉTÉ EXCLUSIVE DE LES INDUSTRIES FOURNIER INC. IL EST STRICTEMENT INTERDIT DE COMMUNIQUER OU UTILISER LES INFORMATIONS À DES FINS AUTRES QUE CELLES PRÉVUES ORIGINALEMENT OU POUVANT ÊTRE PRÉJUDICIABLE AUX INTÉRÊTS DE LES INDUSTRIES FOURNIER INC. TOUTE REPRODUCTION DE CE DESSIN EST INTERDITE ET IL DOIT ÊTRE RETOURNÉ SUR DEMANDE.

Lire conjointement avec PRIE approuvé / Read in conjunction with the approved ITP

Par	Date (DD/MM/YY)	MONT	ELEC							
ETAPES		1	2	3	4	5	6	7	8	9

23-8457

FOURNIER INDUSTRIES INC.
LES INDUSTRIES FOURNIER INC.
3787 BOUL. FRONTENAC, THETFORD-MINES
QUÉBEC, CANADA, G6H-2B5

WINNIPEG, MB
DEWATERING SYSTEM
ROTARY PRESS Ø900mm CVP
LLDPE CAKE CHUTE WITH SS304L CHUTE EXTENSION
ARRANGEMENT

Dessiné / Drawn	Vérifié / Checked	Approuvé / Approved	No IFI / IFI No.
S.LEBEL	E.GAMACHE	D.CLICHÉ	
Date 26/06/2023	Échelle / Scale 1:6	No Équipement du Client / Customer Equipment No.	

Grand./Size D | Dessin No / Drawing No. 53385 | Page/Sheet 1 of 1 | Révision 00

ARTICLE ITEM	REPÈRE REF.	NOMBRE QTY(1)	DÉSIGNATION / DESIGNATION	MATÉRIEL MATERIAL	POIDS(kg) WEIGHT UNIT.(1)	REMARQUES / NOTES - #IFI
501		12	ANCHOR BOLT TYPE "WEDGE" ø5/8" x 6"	S.S.304		UCAN #SS 586
502		16	ANCHOR BOLT TYPE "WEDGE" ø1/2" x 5 1/2"	S.S.304		UCAN #SS 12512
503		24	ANCHOR BOLT TYPE "WEDGE" ø3/8" x 3 3/4"	S.S.304		UCAN #SS 38334

INTERFACE BETWEEN PIPING OF ROTARY PRESS AND CUSTOMER PIPING

- A — SLUDGE INLET ø3"(ø76.2mm) FLANGE
- B — POLYMER INLET ø2"(ø50.8mm) FLANGE
- C — SLUDGE RECIRCULATION OUTLET ø3"(ø76.2mm) NPT/F
- E — FILTRATE OUTLET ø6"(ø152.4mm) PVC PIPE

PROVIDE & INSTALLED BY OTHER

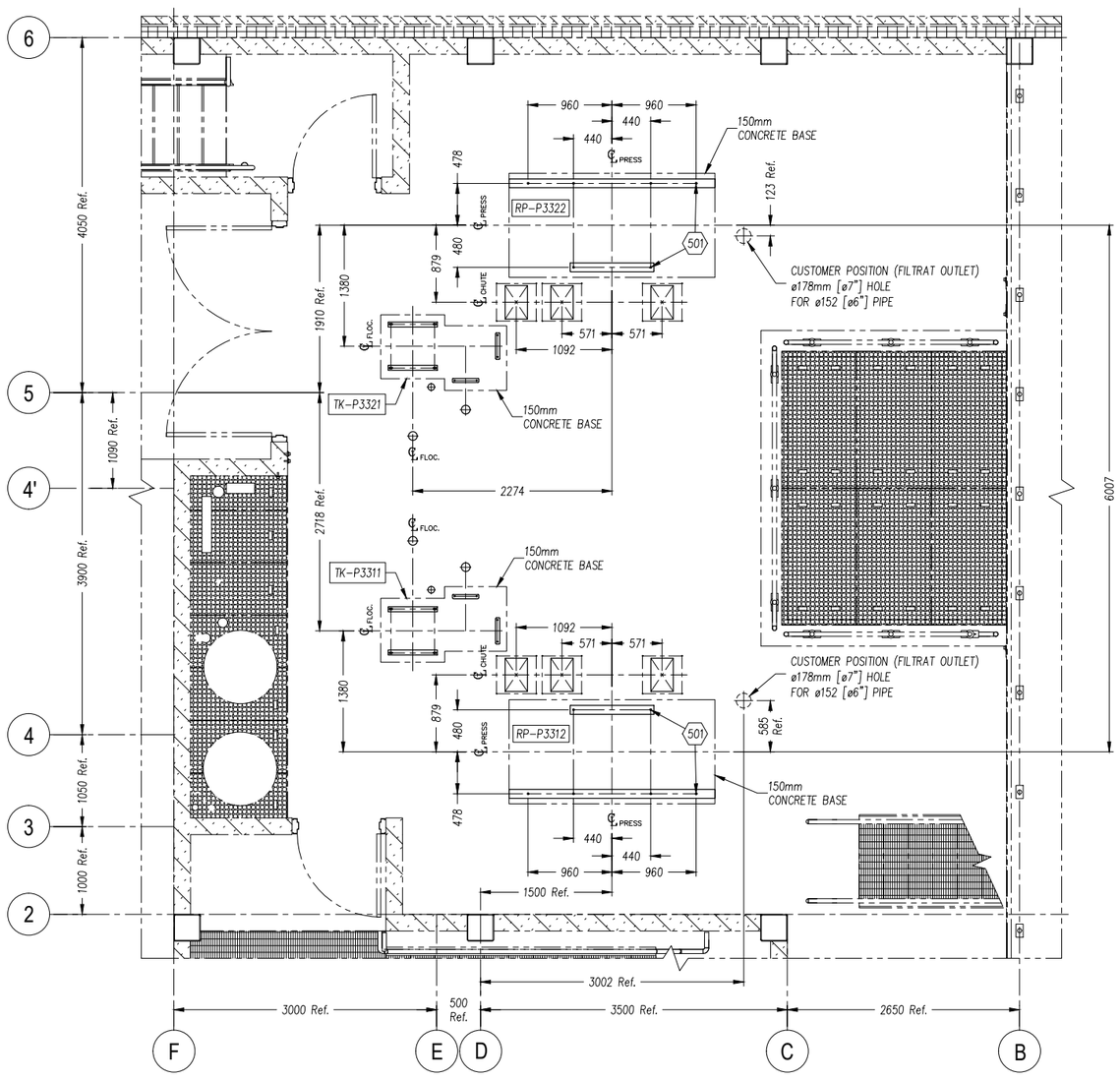

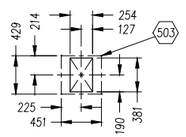

CHUTE OPENING

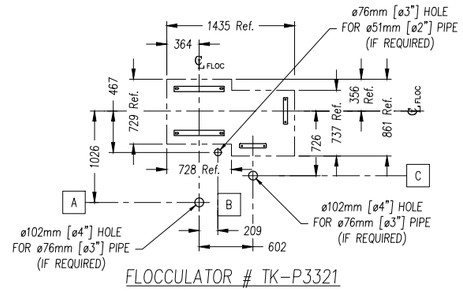

FLOCCULATOR # TK-P3321
FLOOR HOLE DETAIL

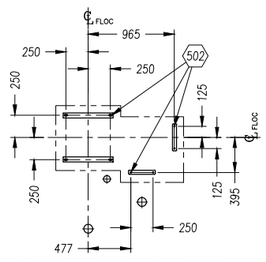

FLOCCULATOR # TK-P3321
ANCHOR BOLT LOCATIONS

are all the floor penetrations in the same location compared to tender drawings or were they changed?

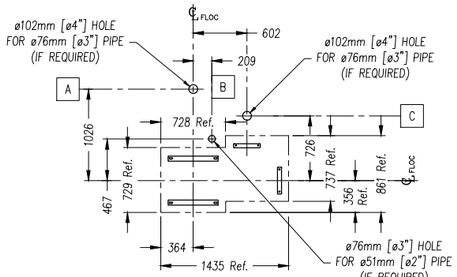

FLOCCULATOR # TK-P3311
FLOOR HOLE DETAIL

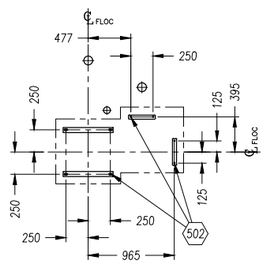

FLOCCULATOR # TK-P3311
ANCHOR BOLT LOCATIONS

(1) LA QUANTITÉ EST DONNÉE POUR UN ASSEMBLAGE / QUANTITY GIVEN IS FOR ONE ASSEMBLY.
(2) LA QUANTITÉ EST DONNÉE POUR UN ASSEMBLAGE EXCLUANT LES ARTICLES MARQUÉS D'UN ASTÉRISQUE / QUANTITY GIVEN FOR ONE ASSEMBLY EXCLUDING ITEMS MARKED WITH AN ASTERISK.

PEINTURE(m2) PAINT SURFACE(2)	0	CAOUTCHOUC(m2) RUBBER SURFACE(2)	0	PL.USURE(kg) WEIGHT OF LINERS(2)	0	POIDS TOT.(kg) TOT. WEIGHT(2)	0	REQUIS TOTAL TOTAL REQ'D	1

Grand./Size D | Dessin No / Drawing No. 53388 | Page/Sheet 1 of 1 | Révision 00

No Projet / Project No. 2023-11911 | No Production / Job No. 23-8456

LÉGENDE/LEGEND
1 @ 299 = ASSEMBLAGES FABRIQUÉS / FABRICATED ASSEMBLY
300 @ 499 = COMPOSANTES MÉCANIQUE / MECHANICAL COMPONENTS
500 @ 699 = BOULONNERIE / BOLTS

NOTES GÉNÉRALES/GENERAL NOTES

ANCHOR BOLT REQUIREMENTS :

ø3/8" ANCHORS:
- MINIMUM EMBEDMENT = 2"
- MINIMUM CONCRETE EDGE DISTANCE = 4"
- MINIMUM C/C ANCHOR = 4" C/C

ø1/2" ANCHORS:
- MINIMUM EMBEDMENT = 2 1/2"
- MINIMUM CONCRETE EDGE DISTANCE = 4"
- MINIMUM C/C ANCHOR = 5 1/2" C/C

ø5/8" ANCHORS:
- MINIMUM EMBEDMENT = 3"
- MINIMUM CONCRETE EDGE DISTANCE = 4 1/2"
- MINIMUM ANCHOR SPACING = 6 1/2" C/C

NO.	REVISIONS	DATE DD-MM-YY	BY/PAR

THIRD ANGLE PROJECTION / PROJECTION TROISIEME ANGLE

SURFACE FINISH 125 — FINITION SURFACE

Tolérances sauf indications contraires/Tolerances unless otherwise stated

SYSTÈME IMPÉRIAL / IMPERIAL SYSTEM			SYSTÈME MÉTRIQUE / METRIC SYSTEM	
	0 - 36"	36" +		0 - 1000mm 1000mm +
FRACTION	± 1/16"	± 1/8"	ENTIER / INTEGER	± 1 mm ± 2mm
2 PLACES .XX	± .010"		1 PLACES .X	± .50 mm
3 PLACES .XXX	± .005"		2 PLACES .XX	± .25 mm
ANGLES		± 1/2°	3 PLACES .XXX	± .125 mm

Ébavurer les arêtes vives (S.I.C.)/Deburring sharp edges (U.O.S)

Weld inspection according CSA W59 section 11 except otherwise noted
VT: 100% PT: As per symbol
UT: As per symbol MT: As per symbol
Sealed welds: 100% LT (leak test)
Lifting lugs: 100% MT, 100%VT

Inspection des soudures selon CSA W59 section 11 sauf indication contraire
VT: 100% PT: Selon symbole
UT: Selon symbole MT: Selon symbole
Soudures étanches: 100% LT (essai d'étanchéité)
Anneaux de levage: 100% MT, 100%VT

THIS DRAWING AND ALL THE INFORMATION IT CONTAINS ARE THE EXCLUSIVE PROPERTY OF LES INDUSTRIES FOURNIER INC. IT IS STRICTLY FORBIDDEN TO COMMUNICATE OR USE THE INFORMATION FOR PURPOSES OTHER THAN THE ORIGINAL INTENDED ONES OR IF THE USE COULD BE HARMFUL TO THE INTERESTS OF LES INDUSTRIES FOURNIER INC. THIS DRAWING IN WHOLE OR IN PART MAY NOT BE REPRODUCED IN ANY FASHION AND HAS TO BE RETURNED TO LES INDUSTRIES FOURNIER INC. UPON REQUEST.

CE DESSIN ET TOUTES LES INFORMATIONS QU'IL CONTIENT SONT LA PROPRIÉTÉ EXCLUSIVE DE LES INDUSTRIES FOURNIER INC. IL EST STRICTEMENT INTERDIT DE COMMUNIQUER OU UTILISER SON CONTENU À D'AUTRES FINS QUE CELLES PRÉVUES ORIGINALEMENT OU POUVANT ÊTRE PRÉJUDICIABLES AUX INTÉRÊTS DE LES INDUSTRIES FOURNIER INC. TOUTE REPRODUCTION DE CE DESSIN EST INTERDITE ET IL DOIT ÊTRE RETOURNÉ SUR DEMANDE.

Lire conjointement avec PRIE approuvé / Read in conjunction with the approved ITP

Par	Dessiné (Dessiné par)	MONT								
ETAPES		1	2	3	4	5	6	7	8	9

23-8456

FOURNIER INDUSTRIES INC.
LES INDUSTRIES FOURNIER INC.
3787 BOUL. FRONTENAC, THETFORD-MINES
QUEBEC, CANADA, G6H-2B5

WINNIPEG, MB
DEWATERING SYSTEM
ROTARY PRESS ø900mm
FLOOR PLAN
MODEL (2X) 3(4)-900/4000CVP-SS304

Dessiné / Drawn	Vérifié / Checked	Approuvé / Approved	No IFI / IFI No.
M.BERNIER	E.GAMACHE	D. CLICHE	
Date	Échelle / Scale	No Équipement du Client / Customer Equipment No.	
29-06-2023	1:30		

Grand./Size D | Dessin No / Drawing No. 53388 | Page/Sheet 1 of 1 | Révision 00

FQF084 (06-2017)

WEIGHT OF PRINCIPAL COMPONENTS OF A ROTARY PRESS		
ITEM	DESIGNATION	KG
1	FILTRATION WHEEL	157
5-6	HOUSING (LEFT OR RIGHT)	72
9	INNER SPACER	29
17	GLAND COVER ASSEMBLY	85
	CHANNEL ASSEMBLY	818

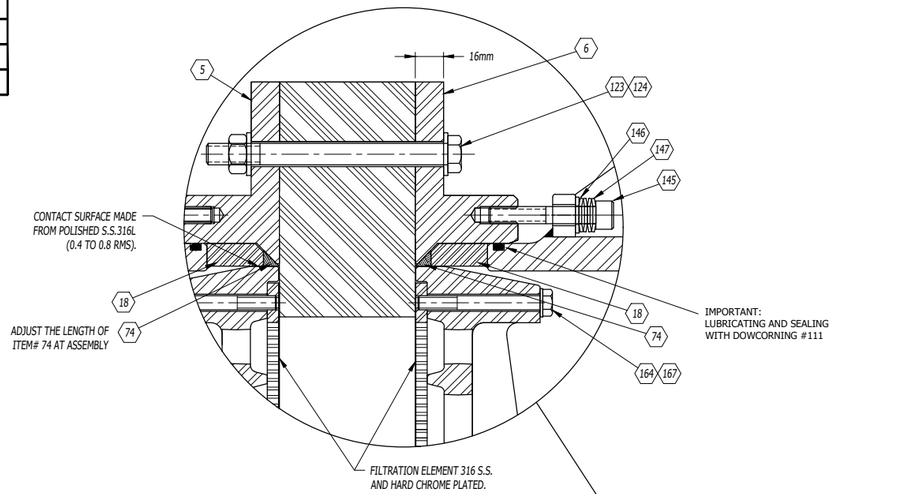

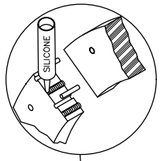

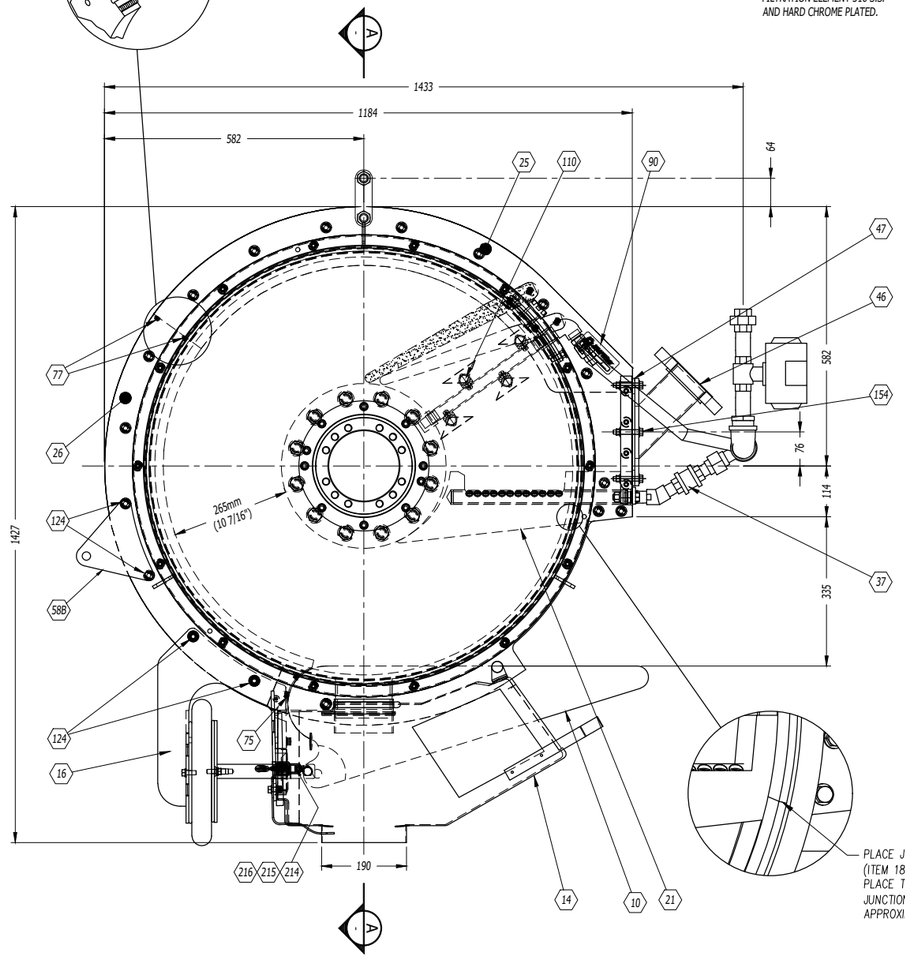

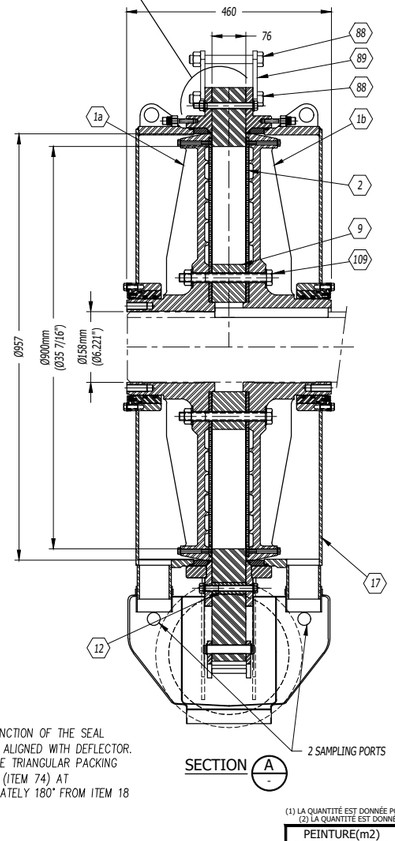

SECTION A

ARTICLE ITEM	REPÈRE REF.	NOMBRE QTY(1)	DÉSIGNATION / DESIGNATION	MATÉRIEL MATERIAL	POIDS(kg) WEIGHT UNIT.(1)	REMARQUES / NOTES - #IFI	✓	ZONES
1a		1	FILTRATION WHEEL WITHOUT KEYWAY	S.S. 304L		IFI-02545		
1b		1	FILTRATION WHEEL WITH KEYWAY	S.S. 304L		IFI-02545CLE		
2		2	FILTRATION ELEMENT 0.015" - 36"	S.S. 316L		IFI-01778CU-SW		
5		1	LEFT HOUSING	S.S. 304L		IFI-02444		
6		1	RIGHT HOUSING	S.S. 304L		IFI-02443		
9		1	INNER SPACER (76mm CHANNEL)	S.S. 316L		IFI-02420		
10		1	VERTICAL RESTRICTOR	UHMW-PE		IFI-02092		
12		1	SLEEVE	S.S. 316L		IFI-02279KP		
14		1	FILTRATE COLLECTOR	LLDPE		IFI-02266		
16		1	ACTUATOR SUPPORT ASSEMBLY	S.S. 316L		43410		
17		2	GLAND COVER ASSEMBLY	S.S. 304L		41453		
18		2	SEAL	ACETAL		IFI-02568		
21		1	DEFLECTOR ASSEMBLY (76mm CHANNEL)	NYLATRON S.S. 316L		49214		
25		1	INLET OUTER SPACER ASS. (76mm CHANNEL)	UHMW-PE		51465		
26		1	OUTLET OUTER SPACER ASS. (76mm CHANNEL)	UHMW-PE		IFI-02094		
37		1	WASHING WATER SYSTEM CONNECTION ASSEMBLY	S.S. 316L		35820		
46		1	INLET (76mm CHANNEL)	S.S. 316L		IFI-02424		
47		1	INLET SEAL (76mm CHANNEL)	NEOPRENE		IFI-02425		
58B		2	ANTI-ROTATION PLATE	S.S. 316L		IFI-01859		
74		2	TRIANGULAR PACKING	GRAPHITE		IFI-02567		
75		2	KEVLAR PACKING 13mm SQ x 76mm	KEVLAR		3R-740		
77		1	SEAL ø3/8" x 153mm (NITRILE B46)	BUNA N		CORT0038-375PO-BKP		
88	SEE 52290		HEX BOLT M20 x 2.5 x 150mm LG.	S.S. 316		MAINTENANCE 103925		
88	SEE 52290		NYLON INSERT LOCKNUT M20 x 2.5	S.S. 316		MAINTENANCE 117858		
89	SEE 52290		LIFTING BRACKET FOR ø900mm CHANNEL	S.S. 316L		MAINTENANCE IFI-01856		
90		1	IDENTIFICATION PL, CONCENTRIC CHANNEL TYPE	DURABLACK		IFI-01915-2		
109		12	HEX BOLT M20 x 2.5 x 200mm LG.	S.S. 304		107888KP		
109		12	HEX NUT M20 x 2.5 DIN 934	S.S. 316		IFI-01925KP		
109		24	FLAT WASHER M20 DIN 125A	S.S. 316		IFI-01926KP		
110		2	WHEEL WASH WATER SYSTEM ASSEMBLY	S.S. 316		26939		
123		13	HEX BOLT M12 x 1.75 x 130mm LG.	S.S. 316		100601KP		
123		13	HEX NUT M12 x 1.75 DIN 934	S.S. 316		100576KP		
123		26	FLAT WASHER M12 DIN 125A	S.S. 316		100561KP		
124		4	HEX BOLT M12 x 1.75 x 140mm LG.	S.S. 316		117882KP		
124		4	HEX NUT M12 x 1.75 DIN 934	S.S. 316		100576KP		
124		8	FLAT WASHER M12 DIN 125A	S.S. 316		100561KP		
145		28	HEX-SOCKET HEAD CAP SCREW M10x1.5x60mm	S.S. 316		104683KP		
146		28	FLAT WASHER M10 DIN125A	S.S. 316		100560KP		
147		112	ø3/8" BELLEVILLE WASHER K0750-C-062	S.S 17-7		117782KP		
154		6	HEX BOLT M10 x 1.50 x 60mm LG.	S.S. 316		100592KP		
154		6	HEX NUT M10 x 1.50 DIN 934	S.S. 316		100575KP		
154		12	FLAT WASHER M10 DIN 125A	S.S. 316		100558KP		
164		60	HEX BOLT M8 x 1.0 x 70mm LG (70 MAX/69 MIN)	S.S. 316		(FINE THREAD) IFI-01763KP		
167		60	FLAT WASHER M8 DIN 433 SPAE-NAUR #659-036	S.S. 316		100557KP		
191		6	HEX BOLT M10 x 1.50 x 20mm LG	NYLON		SPA-353-071KP		
212	SEE 52290		EYE BOLT M16 x 2.0 SHOULDER TYPE	STEEL		MAINTENANCE SPA-026-004		
214		4	BUTTON HEAD HEX DRIVE SCREW M4x7.0x15mm LG	S.S. 316		BT-ISO7380-M4x15KP		
215		4	NYLON INSERTION NUT M4x0.7	S.S. 316		178184KP		
216		4	WASHER M4	S.S. 316		178167KP		

(1) LA QUANTITÉ EST DONNÉE POUR UN ASSEMBLAGE / QUANTITY GIVEN IS FOR ONE ASSEMBLY.
(2) LA QUANTITÉ EST DONNÉE POUR UN ASSEMBLAGE EXCLUANT LES ARTICLES MARQUÉS D'UN ASTÉRISQUE / QUANTITY GIVEN FOR ONE ASSEMBLY EXCLUDING ITEMS MARKED WITH AN ASTERISK.

PEINTURE(m2) PAINT SURFACE(2)	0	CAOUTCHOUC(m2) RUBBER SURFACE(2)	0	PL.USURE(kg) WEIGHT OF LINERS(2)	0	POIDS TOT.(kg) TOT. WEIGHT(2)	818	REQUIS TOTAL TOTAL REQ'D	6

Grand./Size D | Dessin No / Drawing No. 53389 | Page/Sheet 1 of 1 | Révision 00

No Projet / Project No. 2023-11911 | No Production / Job No. 23-8456

LÉGENDE/LEGEND

1 @ 299 = ASSEMBLAGES FABRIQUÉS / FABRICATED ASSEMBLY
300 @ 499 = COMPOSANTES MÉCANIQUE / MECHANICAL COMPONENTS
500 @ 699 = BOULONNERIE / BOLTS

NOTES GÉNÉRALES/GENERAL NOTES

NO.	REVISIONS	DATE (DD-MM-YY)	BY/PAR

THIRD ANGLE PROJECTION
PROJECTION TROISIEME ANGLE

SURFACE FINISH 125 FINITION SURFACE

Tolérances sauf indications contraires/Tolerances unless otherwise stated
SYSTÈME IMPÉRIAL / IMPERIAL SYSTEM: FRACTION ± 1/16" | 2 PLACES .XX ± .010" | 3 PLACES .XXX ± .005" | ANGLES ± 1/2°
SYSTÈME MÉTRIQUE / METRIC SYSTEM: 0 - 36" 0 - 1000mm 1000mm + | ENTIER / INTEGER ± 1 mm ± 2mm | 1 PLACES .X ± .50 mm | 2 PLACES .XX ± .25 mm | 3 PLACES .XXX ± .125 mm
Ébavurer les arêtes vives (S.I.C.)/Deburring sharp edges (U.O.S)

Weld inspection according CSA W59 section 11 except otherwise noted
VT: 100% PT: As per symbol
UT: As per symbol MT: As per symbol
Sealed welds: 100% LT (leak test)
Lifting lugs: 100% MT , 100%VT

Inspection des soudures selon CSA W59 section 11 sauf indication contraire
VT: 100% PT: Selon symbole
UT: Selon symbole MT: Selon symbole
Soudures étanches: 100% LT (essai d'étanchéité)
Anneaux de levage: 100% MT , 100%VT

THIS DRAWING AND ALL THE INFORMATION IT CONTAINS ARE THE EXCLUSIVE PROPERTY OF LES INDUSTRIES FOURNIER INC. IT IS STRICTLY FORBIDDEN TO COMMUNICATE OR USE THE INFORMATION FOR PURPOSES OTHER THAN THE ORIGINAL INTENDED ONES OR IF THE USE COULD BE HARMFUL TO THE INTERESTS OF LES INDUSTRIES FOURNIER INC. THIS DRAWING IN WHOLE OR IN PART MAY NOT BE REPRODUCED IN ANY MANNER AND HAS TO BE RETURNED TO LES INDUSTRIES FOURNIER INC. UPON REQUEST.

CE DESSIN ET TOUTES LES INFORMATIONS QUI L'ONTIENNENT SONT LA PROPRIÉTÉ EXCLUSIVE DE LES INDUSTRIES FOURNIER INC. IL EST STRICTEMENT INTERDIT DE COMMUNIQUER OU UTILISER LES INFORMATIONS À DES FINS AUTRES QUE CELLES PRÉVUES ORIGINALEMENT OU POUVANT ÊTRE PRÉJUDICIABLE AUX INTÉRÊTS DE LES INDUSTRIES FOURNIER INC. TOUTE REPRODUCTION DE CE DESSIN EST INTERDITE ET IL DOIT ÊTRE RETOURNÉ SUR DEMANDE.

Lire conjointement avec PRIE approuvé / Read in conjunction with the approved ITP

Par	Date (DD/MM/YY)								
ETAPES	1	2	3	4	5	6	7	8	9

23-8456

FOURNIER INDUSTRIES INC.
LES INDUSTRIES FOURNIER INC.
3787 BOUL. FRONTENAC, THETFORD-MINES
QUÉBEC, CANADA, G6H-2B5

WINNIPEG, MB
ROTARY PRESS ø900mm CVP
CHANNEL 75mm X 265mm
C/W STAINLESS STEEL COVER
CHANNEL ASSEMBLY - 304L

Dessiné / Drawn	Vérifié / Checked	Approuvé / Approved	No IFI / IFI No.
M.BERNIER	E.GAMACHE	D. CLICHÉ	IFI-02552
Date 26-06-2023	Echelle / Scale 1:6	No Équipement du Client / Customer Equipment No.	

Grand./Size D | Dessin No / Drawing No. 53389 | Page/Sheet 1 of 1 | Révision 00

FQF084 (06-2017)

ARTICLE ITEM	REPÈRE REF.	NOMBRE QTY(1)	DÉSIGNATION / DESIGNATION	MATÉRIEL MATERIAL	POIDS(kg) WEIGHT UNIT.(1)	REMARQUES / NOTES	AUTRES OTHERS

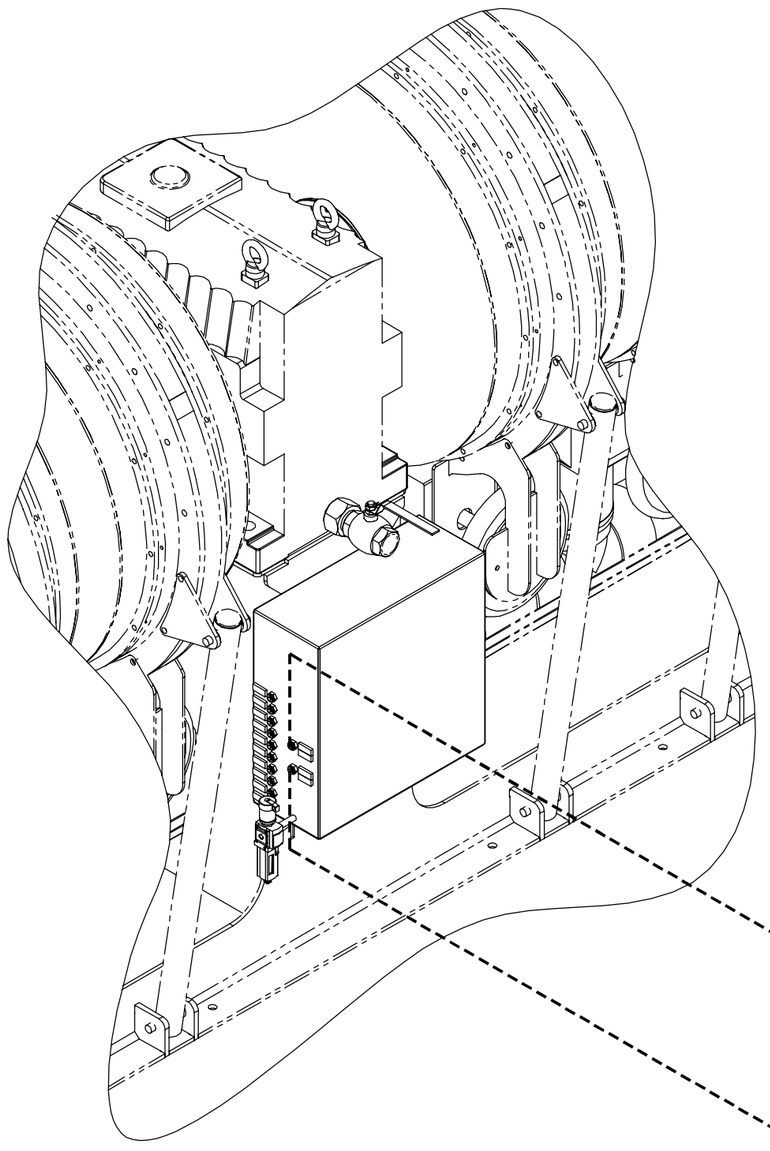

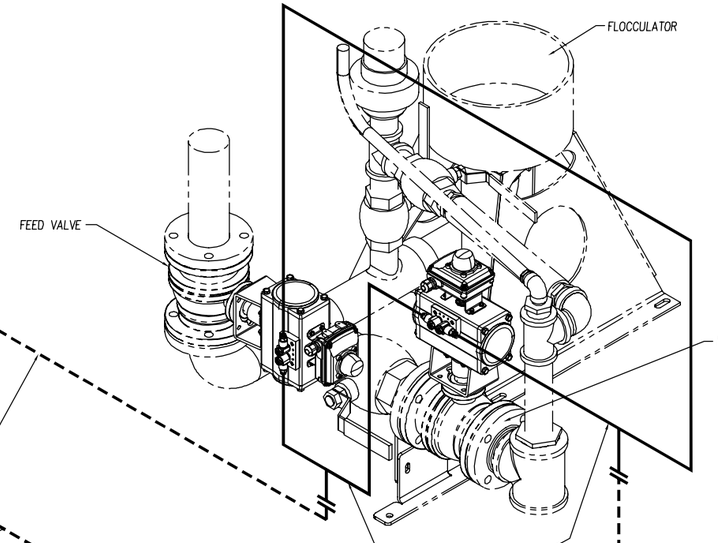

(1) LA QUANTITÉ EST DONNÉE POUR UN ASSEMBLAGE / QUANTITY GIVEN IS FOR ONE ASSEMBLY.
(2) LA QUANTITÉ EST DONNÉE POUR UN ASSEMBLAGE EXCLUANT LES ARTICLES MARQUÉS D'UN ASTÉRISQUE / QUANTITY GIVEN FOR ONE ASSEMBLY EXCLUDING ITEMS MARKED WITH AN ASTERISK.

PEINTURE(m2) PAINT SURFACE(2)	0	CAOUTCHOUC(m2) RUBBER SURFACE(2)	0	PLUSURE(kg) WEIGHT OF LINERS(2)	0	POIDS TOT.(kg) TOT. WEIGHT(2)	0	REQUIS TOTAL TOTAL REQ'D	1

Grand. / Size: D | Dessin No / Drawing No.: STD-1417 | Page/Sheet: 1 de 1 | Revision: 00

No Projet / Project No.: 2018-XXXX | No Production / Job No.: XX-XXXX

LÉGENDE/LEGEND

1 @ 299 = ASSEMBLAGES FABRIQUÉS / FABRICATED ASSEMBLY
300 @ 499 = COMPOSANTES MÉCANIQUE / MECHANICAL COMPONENTS
500 @ 699 = BOULONNERIE / BOLTS

NOTES GÉNÉRALES/GENERAL NOTES

NO.	REVISIONS	DATE (DD-MM-YY)	BY/PAR

THIRD ANGLE PROJECTION
PROJECTION TROISIEME ANGLE

SURFACE FINISH / FINITION SURFACE

Tolérances sauf indications contraires/Tolerances unless otherwise stated
SYSTÈME IMPÉRIAL / IMPERIAL SYSTEM | SYSTÈME MÉTRIQUE / METRIC SYSTEM

			0 - 36"	36" +	0 - 1000mm	1000mm +
FRACTION	± 1/16"	± 1/8"	ENTIER / INTEGER	± 1 mm	± 2mm
2 PLACES .XX	± .010"	——	1 PLACES .X	± .50 mm	——
3 PLACES .XXX	± .005"	——	2 PLACES .XX	± .25 mm	——
ANGLES		± 1/2°	3 PLACES .XXX	± .125 mm	——

Weld inspection according CSA W59 section 11 except otherwise noted
VT: 100% PT: As per symbol
UT: As per symbol MT: As per symbol
Sealed welds: 100% LT (leak test)
Lifting lugs: 100% MT, 1000YT

Inspection des soudures selon CSA W59 section 11 sauf indication contraire
VT: 100% PT: Selon symbole
UT: Selon symbole MT: Selon symbole
Soudures étanches: 100% LT (essai d'étanchéité)
Anneaux de levage: 100% MT, 1000YT

THIS DRAWING AND ALL THE INFORMATION IT CONTAINS ARE THE EXCLUSIVE PROPERTY OF LES INDUSTRIES FOURNIER INC. IT IS STRICTLY FORBIDDEN TO COMMUNICATE OR USE THE INFORMATION FOR PURPOSES OTHER THAN THE ORIGINAL INTENDED ONES OR IF THIS USE COULD BE HARMFUL TO THE INTERESTS OF LES INDUSTRIES FOURNIER INC. THIS DRAWING IN WHOLE OR IN PART MAY NOT BE REPRODUCED IN ANY FASHION AND HAS TO BE RETURNED TO LES INDUSTRIES FOURNIER INC. UPON REQUEST.

LE DESSIN ET TOUTES LES INFORMATIONS QUIL CONTIENT SONT LA PROPRIÉTÉ EXCLUSIVE DE LES INDUSTRIES FOURNIER INC. IL EST STRICTEMENT INTERDIT DE COMMUNIQUER OU UTILISER POUR DES FINS AUTRES QUE CELLES PERMISES ORIGINALEMENT OU POUVANT ÊTRE PRÉJUDICIABLES AUX INTÉRÊTS DE LES INDUSTRIES FOURNIER INC. TOUTE REPRODUCTION EN CE DESSIN EST INTERDITE ET IL DOIT ÊTRE RETOURNÉ SUR DEMANDE.

Lire conjointement avec PRIE approuvé / Read in conjunction with the approved ITP

Par / By: AMD	Date (DD-MM-YY): 26-06-18	MONT							
ETAPES	1	2	3	4	5	6	7	8	9

XX-XXXX

FOURNIER INDUSTRIES INC.
LES INDUSTRIES FOURNIER INC.
3787 BOUL. FRONTENAC, THETFORD-MINES
QUEBEC, CANADA, G6H-2B5

ø1/4 PIPE - FIELD CONNECTION GENERAL ARRANGEMENT

Dessiné / Drawn	Vérifié / Checked	Approuvé / Approved	No IFI / IFI No.
AMD	E. GAMACHE	R. ROY	
Date: 12-06-2018	Echelle / Scale	No Équipement du Client / Customer Equipment No.	

Grand. / Size: D | Dessin No / Drawing No.: STD-1417 | Page/Sheet: 1 de 1 | Revision: 00

FoFE44 (04-2017)

Section 2

Electrical Drawings

WINNIPEG, MB

2 X ROTARY PRESS – 3(4)–900/4000CVP

	PROJECT	SHEET	REVISION	LOCALISATION	DESCRIPTION
GENERAL	23–8460	0	0.0		DRAWING LIST – (1 OF 2)
	23–8460	1	0.0		DRAWING LIST – (2 OF 2)
	23–8460	2	0.0		SINGLE LINE DIAGRAM – (1 OF 2)
	23–8460	3	0.0		SINGLE LINE DIAGRAM – (2 OF 2)
	23–8460	4	0.0		LIST OF MATERIAL – EXTERNAL COMPONENTS
	23–8460	5	0.0		LIST OF REFERENCES
	23–8460	6	0.0		ASSEMBLY & WIRING INSTRUCTIONS
POWER PANEL	23–8460	100	0.0	POWER PANEL	GENERAL ARRANGEMENT
	23–8460	101	0.0	POWER PANEL	LIST OF MATERIAL – (1 OF 2)
	23–8460	102	0.0	POWER PANEL	LIST OF MATERIAL – (2 OF 2)
	23–8460	110	0.0	POWER PANEL	ELECTRICAL ARRANGEMENT – 480 VAC
	23–8460	111	0.0	POWER PANEL	ELECTRICAL ARRANGEMENT – 120 VAC
	23–8460	112	0.0	POWER PANEL	ELECTRICAL ARRANGEMENT – 24 VDC
	23–8460	113	0.0	POWER PANEL	SAFETY – EMERGENCY STOP
	23–8460	114	0.0	POWER PANEL	NETWORK ARRANGEMENT
	23–8460	115	0.0	POWER PANEL	VFD – ROTARY PRESS 1 & 2
	23–8460	116	0.0	POWER PANEL	VFD – FLOCCULATOR 1 & 2
CONTROL PANEL	23–8460	200	0.0	CONTROL PANEL	GENERAL ARRANGEMENT
	23–8460	201	0.0	CONTROL PANEL	LIST OF MATERIAL – (1 OF 2)
	23–8460	202	0.0	CONTROL PANEL	LIST OF MATERIAL – (2 OF 2)
	23–8460	210	0.0	CONTROL PANEL	ELECTRICAL ARRANGEMENT – 120 VAC
	23–8460	211	0.0	CONTROL PANEL	ELECTRICAL ARRANGEMENT – 24 VDC
	23–8460	212	0.0	CONTROL PANEL	SAFETY ARRANGEMENT
	23–8460	213	0.0	CONTROL PANEL	PLC & NETWORK ARRANGEMENT
	23–8460	214	0.0	CONTROL PANEL	ANALOG INPUTS – MODULE 1
	23–8460	215	0.0	CONTROL PANEL	ANALOG INPUTS – MODULE 2
	23–8460	216	0.0	CONTROL PANEL	ANALOG INPUTS – MODULE 3
	23–8460	217	0.0	CONTROL PANEL	ANALOG OUTPUTS – MODULE 1
	23–8460	218	0.0	CONTROL PANEL	ANALOG OUTPUTS – MODULE 2
	23–8460	219	0.0	CONTROL PANEL	DISCRETE INPUTS – MODULE 1 – (1 OF 2)
	23–8460	220	0.0	CONTROL PANEL	DISCRETE INPUTS – MODULE 1 – (2 OF 2)
	23–8460	221	0.0	CONTROL PANEL	DISCRETE INPUTS – MODULE 2 – (1 OF 2)
	23–8460	222	0.0	CONTROL PANEL	DISCRETE INPUTS – MODULE 2 – (2 OF 2)

NOT TO BE USED FOR INSTALLATION

USE REV 2.X
(FOR CONSTRUCTION)

Notes générales / General notes

Rev.	Description	Date	Dessiné / Drawn
0.0	FOR APPROVAL	04/07/2023	D. MARTEL

LES INDUSTRIES FOURNIER INC.
FOURNIER INDUSTRIES INC.
3787 BOUL. FRONTENAC OUEST
THETFORD MINES, QUÉBEC, CANADA, G6H 2B5

CE DESSIN ET TOUTES LES INFORMATIONS QU'IL CONTIENT SONT LA PROPRIÉTÉ EXCLUSIVE DE LES INDUSTRIES FOURNIER INC. IL EST STRICTEMENT INTERDIT DE COMMUNIQUER OU UTILISER SON CONTENU À D'AUTRES FINS QUE CELLES PERMISES ORIGINALEMENT OU POUVANT ÊTRE PRÉJUDICIABLES AUX INTÉRÊTS DE LES INDUSTRIES FOURNIER INC. TOUTE REPRODUCTION DE CE DESSIN EST INTERDITE ET IL DOIT ÊTRE RETOURNÉ SUR DEMANDE.

THIS DRAWING AND ALL THE INFORMATION IT CONTAINS ARE THE EXCLUSIVE PROPERTY OF FOURNIER INDUSTRIES INC. IT IS STRICTLY FORBIDDEN TO COMMUNICATE OR USE THE INFORMATION FOR PURPOSES OTHER THAN THE ORIGINAL INTENDED ONES OR IF THE USE COULD BE HARMFUL TO THE INTERESTS OF FOURNIER INDUSTRIES INC. THIS DRAWING IN WHOLE OR IN PART MAY NOT BE REPRODUCED IN ANY FASHION AND HAS TO BE RETURNED TO FOURNIER INDUSTRIES INC. UPON REQUEST.

Sceau / Stamp

Créer par / Created by	D. MARTEL
Vérifié / Checked	G. ARCAND
Approuvé / Approuved	M.–A. TURGEON
Date de création / Creation date	16/06/2023
Échelle / Scale	

WINNIPEG, MB

2 X ROTARY PRESS 3(4)–900/4000CVP

DRAWING LIST – (1 OF 2)

No Projet / Project No.	No Dessin/ Drawing No.	Revision
2023-11911	D- 23-8460 - 0	0.0

WINNIPEG, MB

2 X ROTARY PRESS – 3(4)–900/4000CVP

	PROJECT	SHEET	REVISION	LOCALISATION	DESCRIPTION
CONTROL PANEL	23–8460	223	0.0	CONTROL PANEL	DISCRETE OUTPUTS – MODULE 1
	23–8460	224	0.0	CONTROL PANEL	DISCRETE OUTPUTS – MODULE 2
	23–8460	225	0.0	CONTROL PANEL	DISCRETE OUTPUTS – CONTACTS – (1 OF 2)
	23–8460	226	0.0	CONTROL PANEL	DISCRETE OUTPUTS – CONTACTS – (2 OF 2)
	23–8460	227	0.0	CONTROL PANEL	POLYMER SYSTEM
HMI PANEL	23–8460	300	0.0	HMI PANEL	PANEL ARRANGEMENT
	23–8460	301	0.0	HMI PANEL	LIST OF MATERIAL
	23–8460	310	0.0	HMI PANEL	ELECTRICAL & NETWORK ARRANGEMENT
ROTARY PRESS 1 JUNCTION BOX	23–8460	400	0.0	ROTARY PRESS 1 – JB	PANEL ARRANGEMENT
	23–8460	401	0.0	ROTARY PRESS 1 – JB	LIST OF MATERIAL
	23–8460	410	0.0	ROTARY PRESS 1 – JB	PNEUMATIC ARRANGEMENT
	23–8460	411	0.0	ROTARY PRESS 1 – JB	ELECTRICAL ARRANGEMENT – (1 OF 2)
	23–8460	412	0.0	ROTARY PRESS 1 – JB	ELECTRICAL ARRANGEMENT – (2 OF 2)
ROTARY PRESS 2 JUNCTION BOX	23–8460	500	0.0	ROTARY PRESS 2 – JB	PANEL ARRANGEMENT
	23–8460	501	0.0	ROTARY PRESS 2 – JB	LIST OF MATERIAL
	23–8460	510	0.0	ROTARY PRESS 2 – JB	PNEUMATIC ARRANGEMENT
	23–8460	511	0.0	ROTARY PRESS 2 – JB	ELECTRICAL ARRANGEMENT – (1 OF 2)
	23–8460	512	0.0	ROTARY PRESS 2 – JB	ELECTRICAL ARRANGEMENT – (2 OF 2)
MISC	23–8460	1000	0.0	MISC	LEGEND PLATES

NOT TO BE USED FOR INSTALLATION

USE REV 2.X
(FOR CONSTRUCTION)

Notes générales / General notes

Rev.	Description	Date	Dessiné / Drawn
0.0	FOR APPROVAL	04/07/2023	D. MARTEL

CE DESSIN ET TOUTES LES INFORMATIONS QU'IL CONTIENT SONT LA PROPRIÉTÉ EXCLUSIVE DE LES INDUSTRIES FOURNIER INC. IL EST STRICTEMENT INTERDIT DE COMMUNIQUER OU UTILISER SON CONTENU À D'AUTRES FINS QUE CELLES PERMISES ORIGINALEMENT OU POUVANT ÊTRE PRÉJUDICIABLES AUX INTÉRÊTS DE LES INDUSTRIES FOURNIER INC. TOUTE REPRODUCTION DE CE DESSIN EST INTERDITE ET IL DOIT ÊTRE RETOURNÉ SUR DEMANDE.

THIS DRAWING AND ALL THE INFORMATION IT CONTAINS ARE THE EXCLUSIVE PROPERTY OF FOURNIER INDUSTRIES INC. IT IS STRICTLY FORBIDDEN TO COMMUNICATE OR USE THE INFORMATION FOR PURPOSES OTHER THAN THE ORIGINAL INTENDED ONES OR IF THE USE COULD BE HARMFUL TO THE INTERESTS OF FOURNIER INDUSTRIES INC. THIS DRAWING IN WHOLE OR IN PART MAY NOT BE REPRODUCED IN ANY FASHION AND HAS TO BE RETURNED TO FOURNIER INDUSTRIES INC. UPON REQUEST.

LES INDUSTRIES FOURNIER INC.
FOURNIER INDUSTRIES INC.
3787 BOUL. FRONTENAC OUEST
THETFORD MINES, QUÉBEC, CANADA, G6H 2B5

Sceau / Stamp

Créer par / Created by	D. MARTEL
Vérifié / Checked	G. ARCAND
Approuvé / Approuved	M.–A. TURGEON
Date de création / Creation date	16/06/2023
Échelle / Scale	

WINNIPEG, MB
2 X ROTARY PRESS 3(4)–900/4000CVP

DRAWING LIST – (2 OF 2)

No Projet / Project No.	No Dessin/ Drawing No.	Revision
2023-11911	D - 23-8460 - 1	0.0

CABLE: SUPPLIED AND INSTALLED BY FOURNIER.
CABLE: SUPPLIED AND INSTALLED BY OTHERS.
ENET ETHERNET CABLE: SUPPLIED AND INSTALLED BY OTHERS.

CONTROL PANEL (LCP-3110B)

POWER PANEL (LCP-3110A)

CONTROL PANEL (LCP-3110B)

POWER PANEL (LCP-3110A)

NOT TO BE USED FOR INSTALLATION

USE REV 2.X (FOR CONSTRUCTION)

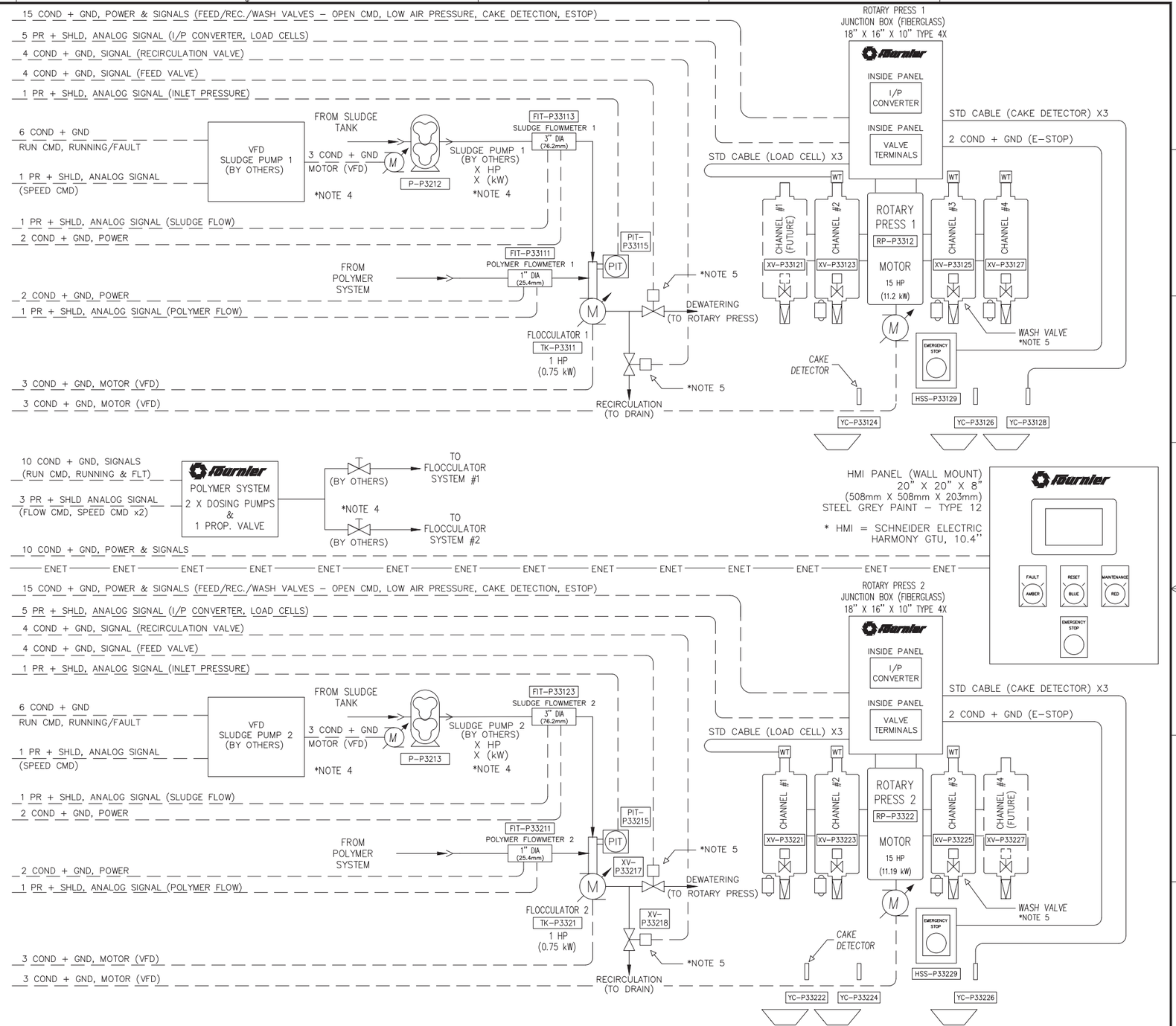

Notes générales / General notes

NOTE 1:
SLUDGE PUMP SPEED NEEDS TO BE VFD CONTROLLED TO KEEP A CONSTANT INLET PRESSURE.

NOTE 2:
LOCAL MOTORS DISCONNECT SWITCHES TO BE PROVIDED BY OTHERS.

NOTE 3:
POLYMER PUMP SPEED NEEDS TO BE VFD CONTROLLED TO KEEP A CONSTANT POLYMER / SLUDGE RATIO.

NOTE 4:
COULD BE SUPPLIED ON REQUEST.

NOTE 5:
PNEUMATICALLY ACTIVATED.

Rev.	Description	Date	Dessiné / Drawn
0.0	FOR APPROVAL	04/07/2023	D. MARTEL

LES INDUSTRIES FOURNIER INC.
FOURNIER INDUSTRIES INC.
3787 BOUL. FRONTENAC OUEST
THETFORD MINES, QUÉBEC, CANADA, G6H 2B5

CE DESSIN ET TOUTES LES INFORMATIONS QU'IL CONTIENT SONT LA PROPRIÉTÉ EXCLUSIVE DE LES INDUSTRIES FOURNIER INC. IL EST STRICTEMENT INTERDIT DE COMMUNIQUER OU UTILISER SON CONTENU À D'AUTRES FINS QUE CELLES PERMISES ORIGINALEMENT OU POUVANT ÊTRE PRÉJUDICIABLES AUX INTÉRÊTS DE LES INDUSTRIES FOURNIER INC. TOUTE REPRODUCTION DE CE DESSIN EST INTERDITE ET IL DOIT ÊTRE RETOURNÉ SUR DEMANDE.

THIS DRAWING AND ALL THE INFORMATION IT CONTAINS ARE THE EXCLUSIVE PROPERTY OF FOURNIER INDUSTRIES INC., IT IS STRICTLY FORBIDDEN TO COMMUNICATE OR USE THE INFORMATION FOR PURPOSES OTHER THAN THE ORIGINAL INTENDED ONES OR IF THE USE COULD BE HARMFUL TO THE INTERESTS OF FOURNIER INDUSTRIES INC. THIS DRAWING IN WHOLE OR IN PART MAY NOT BE REPRODUCED IN ANY FASHION AND HAS TO BE RETURNED TO FOURNIER INDUSTRIES INC. UPON REQUEST.

Sceau / Stamp

Créer par / Created by	D. MARTEL
Vérifié / Checked	G. ARCAND
Approuvé / Approuved	M.-A. TURGEON
Date de création / Creation date	16/06/2023
Échelle / Scale	

WINNIPEG, MB

2 X ROTARY PRESS 3(4)-900/4000CVP

SINGLE LINE DIAGRAM – (1 OF 2)

No Projet / Project No.	No Dessin/ Drawing No.	Revision
2023-11911	D - 23-8460 - 2	0.0

FQF-076R2 (171020)

CABLE: SUPPLIED AND INSTALLED BY FOURNIER.
CABLE: SUPPLIED AND INSTALLED BY OTHERS.
ENET ETHERNET CABLE: SUPPLIED AND INSTALLED BY OTHERS.

LCP-3110B

CONTROL PANEL (FLOOR-MOUNT)
60" X 36" X 12"
(1524mm X 914mm X 305mm)
STEEL GREY PAINT – TYPE 12

POWER
(BY OTHERS)
120V, 20 AMP

ENET ENET → TO INTERNET SOURCE

ENET ENET → ETHERNET I/P COMMUNICATION TO SCADA

* PLC = SCHNEIDER ELECTRIC
MODICON M580

LAPTOP SHELF

UPS

12 COND + GND, SIGNALS (CONTROL, SAFETY)

ETHERNET COMMUNICATION (VFD CONTROL)
ENET ENET ENET ENET ENET ENET ENET

LCP-3110A

POWER PANEL (FLOOR-MOUNT)
60" X 36" X 12"
(1524mm X 914mm X 305mm)
STEEL GREY PAINT – TYPE 12

POWER
(BY OTHERS)
600 VAC, 40AMP
3PH 60HZ

A/C

HS-P33120 HS-P33110 HS-P33220 HS-P33210

RUNNING GREEN · FAULT AMBER · OFF MAN AUTO · SPEED

* VFD = SCHNEIDER ELECTRIC
ALTIVAR 930 X2
ALTIVAR 320 X2

INSIDE PANEL
VFD104
FLOCCULATOR 2
ALTIVAR 320
1 HP
(0.75 kW)
116(7G)

INSIDE PANEL
VFD101
ROTARY PRESS 1
ALTIVAR 930
15 HP
(11.19 kW)
115(3G)

INSIDE PANEL
VFD102
ROTARY PRESS 2
ALTIVAR 930
15 HP
(11.19 kW)
115(7G)

INSIDE PANEL
VFD103
FLOCCULATOR 1
ALTIVAR 320
1 HP
(0.75 kW)
116(3G)

NOT TO BE USED FOR INSTALLATION

USE REV 2.X
(FOR CONSTRUCTION)

Notes générales / General notes

Rev.	Description	Date	Dessiné / Drawn
0.0	FOR APPROVAL	04/07/2023	D. MARTEL

CE DESSIN ET TOUTES LES INFORMATIONS QU'IL CONTIENT SONT LA PROPRIÉTÉ EXCLUSIVE DE LES INDUSTRIES FOURNIER INC. IL EST STRICTEMENT INTERDIT DE COMMUNIQUER OU UTILISER SON CONTENU À D'AUTRES FINS QUE CELLES PERMISES ORIGINALEMENT OU POUVANT ÊTRE PRÉJUDICIABLES AUX INTÉRÊTS DE LES INDUSTRIES FOURNIER INC. TOUTE REPRODUCTION DE CE DESSIN EST INTERDITE ET IL DOIT ÊTRE RETOURNÉ SUR DEMANDE.

THIS DRAWING AND ALL THE INFORMATION IT CONTAINS ARE THE EXCLUSIVE PROPERTY OF FOURNIER INDUSTRIES INC. IT IS STRICTLY FORBIDDEN TO COMMUNICATE OR USE THE INFORMATION FOR PURPOSES OTHER THAN THE ORIGINAL INTENDED ONES OR IF THE USE COULD BE HARMFUL TO THE INTERESTS OF FOURNIER INDUSTRIES INC. THIS DRAWING IN WHOLE OR IN PART MAY NOT BE REPRODUCED IN ANY FASHION AND HAS TO BE RETURNED TO FOURNIER INDUSTRIES INC. UPON REQUEST.

LES INDUSTRIES FOURNIER INC.
FOURNIER INDUSTRIES INC.
3787 BOUL. FRONTENAC OUEST
THETFORD MINES, QUÉBEC, CANADA, G6H 2B5

Sceau / Stamp

Créer par / Created by	D. MARTEL
Vérifié / Checked	G. ARCAND
Approuvé / Approuved	M.-A. TURGEON
Date de création / Creation date	16/06/2023
Échelle / Scale	

WINNIPEG, MB
2 X ROTARY PRESS 3(4)-900/4000CVP

SINGLE LINE DIAGRAM – (2 OF 2)

No Projet / Project No.	No Dessin/ Drawing No.	Revision
2023-11911	D - 23-8460 - 3	0.0

TAG	QTY	DESCRIPTION	CAT. NO.	CAT. NO. (FOURNIER)	MANUFACTURER
FIT-P33111	1	FLOWMETER 1", SUPPLY 24VDC, 4-20MA HART, WITH LCD, CSA US APPROUVED	5WBB25-CPDADBJA0 DQA120AA1	END-5WBB25-24V	ENDRESS + HAUSER
FIT-P33113	1	FLOWMETER 3", SUPPLY 24VDC, 4-20MA HART, WITH LCD, CSA US APPROUVED	5WBB80-CPDADBJA0 DUA120AA1	END-5WBB80-24V	ENDRESS + HAUSER
FIT-P33123	1	FLOWMETER 3", SUPPLY 24VDC, 4-20MA HART, WITH LCD, CSA US APPROUVED	5WBB80-CPDADBJA0 DUA120AA1	END-5WBB80-24V	ENDRESS + HAUSER
FIT-P33211	1	FLOWMETER 1", SUPPLY 24VDC, 4-20MA HART, WITH LCD, CSA US APPROUVED	5WBB25-CPDADBJA0 DQA120AA1	END-5WBB25-24V	ENDRESS + HAUSER
LC402	1	LOAD CELL 5KLB, 3/4-16 UNF-2B, CFMUS & CE APPROVED	101NH-5KLB	IFI-02027-ANYLOAD	ANYLOAD
LC403	1	LOAD CELL 5KLB, 3/4-16 UNF-2B, CFMUS & CE APPROVED	101NH-5KLB	IFI-02027-ANYLOAD	ANYLOAD
LC404	1	LOAD CELL 5KLB, 3/4-16 UNF-2B, CFMUS & CE APPROVED	101NH-5KLB	IFI-02027-ANYLOAD	ANYLOAD
LC501	1	LOAD CELL 5KLB, 3/4-16 UNF-2B, CFMUS & CE APPROVED	101NH-5KLB	IFI-02027-ANYLOAD	ANYLOAD
LC502	1	LOAD CELL 5KLB, 3/4-16 UNF-2B, CFMUS & CE APPROVED	101NH-5KLB	IFI-02027-ANYLOAD	ANYLOAD
LC503	1	LOAD CELL 5KLB, 3/4-16 UNF-2B, CFMUS & CE APPROVED	101NH-5KLB	IFI-02027-ANYLOAD	ANYLOAD
PIT-P33115	1	PRESSURE TRANSMITTER, 30 PSI, 4-20MA HART, WITH LCD, CSA US APPROUVED	PMC71B-CABADJH6A 3KFA1VXJD	END-PMC71B-24V	ENDRESS + HAUSER
PIT-P33215	1	PRESSURE TRANSMITTER, 30 PSI, 4-20MA HART, WITH LCD, CSA US APPROUVED	PMC71B-CABADJH6A 3KFA1VXJD	END-PMC71B-24V	ENDRESS + HAUSER
POL201	1	LIQUID POLYMER SYSTEM, 1/2", PUMP - 100-240VAC 50/60HZ, CONTROL VALVE - 24VDC & 4-20mA IN, ON SKID, CUSTOM	POLYSYS-1/2-120V CUSTOM		FOURNIER
W-YCP33124-C1	1	M12 CABLE, SAC-4P-10,0-PUR/M12FR, 90 DEG, FREE CABLE END, 10M, 22 AWG	1681389	IFI-01942KE	PHOENIX CONTACT
W-YCP33126-C1	1	M12 CABLE, SAC-4P-10,0-PUR/M12FR, 90 DEG, FREE CABLE END, 10M, 22 AWG	1681389	IFI-01942KE	PHOENIX CONTACT
W-YCP33128-C1	1	M12 CABLE, SAC-4P-10,0-PUR/M12FR, 90 DEG, FREE CABLE END, 10M, 22 AWG	1681389	IFI-01942KE	PHOENIX CONTACT
W-YCP33222-C1	1	M12 CABLE, SAC-4P-10,0-PUR/M12FR, 90 DEG, FREE CABLE END, 10M, 22 AWG	1681389	IFI-01942KE	PHOENIX CONTACT
W-YCP33224-C1	1	M12 CABLE, SAC-4P-10,0-PUR/M12FR, 90 DEG, FREE CABLE END, 10M, 22 AWG	1681389	IFI-01942KE	PHOENIX CONTACT
W-YCP33226-C1	1	M12 CABLE, SAC-4P-10,0-PUR/M12FR, 90 DEG, FREE CABLE END, 10M, 22 AWG	1681389	IFI-01942KE	PHOENIX CONTACT
YC-P33124	1	PLASTIC CAPACITIVE PROXIMITY SENSOR, M18, 4-WIRE DC, PNP, NON FLUSH MOUNT	XT218A1PCM12	IFI-02165KE	SCHNEIDER ELECTRIC
YC-P33126	1	PLASTIC CAPACITIVE PROXIMITY SENSOR, M18, 4-WIRE DC, PNP, NON FLUSH MOUNT	XT218A1PCM12	IFI-02165KE	SCHNEIDER ELECTRIC
YC-P33128	1	PLASTIC CAPACITIVE PROXIMITY SENSOR, M18, 4-WIRE DC, PNP, NON FLUSH MOUNT	XT218A1PCM12	IFI-02165KE	SCHNEIDER ELECTRIC
YC-P33222	1	PLASTIC CAPACITIVE PROXIMITY SENSOR, M18, 4-WIRE DC, PNP, NON FLUSH MOUNT	XT218A1PCM12	IFI-02165KE	SCHNEIDER ELECTRIC
YC-P33224	1	PLASTIC CAPACITIVE PROXIMITY SENSOR, M18, 4-WIRE DC, PNP, NON FLUSH MOUNT	XT218A1PCM12	IFI-02165KE	SCHNEIDER ELECTRIC
YC-P33226	1	PLASTIC CAPACITIVE PROXIMITY SENSOR, M18, 4-WIRE DC, PNP, NON FLUSH MOUNT	XT218A1PCM12	IFI-02165KE	SCHNEIDER ELECTRIC
YE401	1	UNION Y-SHAPED 1/4" X 1/4" X 1/4" TUBE	D3140-4	DOM-D3140-4KE	DOMINION FITTING
YE402	1	UNION Y-SHAPED 1/4" X 1/4" X 1/4" TUBE	D3140-4	DOM-D3140-4KE	DOMINION FITTING
YE501	1	UNION Y-SHAPED 1/4" X 1/4" X 1/4" TUBE	D3140-4	DOM-D3140-4KE	DOMINION FITTING
YE502	1	UNION Y-SHAPED 1/4" X 1/4" X 1/4" TUBE	D3140-4	DOM-D3140-4KE	DOMINION FITTING

NOT TO BE USED FOR INSTALLATION

USE REV 2.X
(FOR CONSTRUCTION)

Notes générales / General notes

Rev.	Description	Date	Dessiné / Drawn
0.0	FOR APPROVAL	04/07/2023	D. MARTEL

CE DESSIN ET TOUTES LES INFORMATIONS QU'IL CONTIENT SONT LA PROPRIÉTÉ EXCLUSIVE DE LES INDUSTRIES FOURNIER INC. IL EST STRICTEMENT INTERDIT DE COMMUNIQUER OU UTILISER SON CONTENU À D'AUTRES FINS QUE CELLES PERMISES ORIGINALEMENT OU POUVANT ÊTRE PRÉJUDICIABLES AUX INTÉRÊTS DE LES INDUSTRIES FOURNIER INC. TOUTE REPRODUCTION DE CE DESSIN EST INTERDITE ET IL DOIT ÊTRE RETOURNÉ SUR DEMANDE.

THIS DRAWING AND ALL THE INFORMATION IT CONTAINS ARE THE EXCLUSIVE PROPERTY OF FOURNIER INDUSTRIES INC. IT IS STRICTLY FORBIDDEN TO COMMUNICATE OR USE THE INFORMATION FOR PURPOSES OTHER THAN THE ORIGINAL INTENDED ONES OR IF THE USE COULD BE HARMFUL TO THE INTERESTS OF FOURNIER INDUSTRIES INC. THIS DRAWING IN WHOLE OR IN PART MAY NOT BE REPRODUCED IN ANY FASHION AND HAS TO BE RETURNED TO FOURNIER INDUSTRIES INC. UPON REQUEST.

LES INDUSTRIES FOURNIER INC.
FOURNIER INDUSTRIES INC.
3787 BOUL. FRONTENAC OUEST
THETFORD MINES, QUÉBEC, CANADA, G6H 2B5

Sceau / Stamp

Créer par / Created by: D. MARTEL
Vérifié / Checked: G. ARCAND
Approuvé / Approuved: M.-A. TURGEON
Date de création / Creation date: 16/06/2023
Échelle / Scale:

WINNIPEG, MB
2 X ROTARY PRESS 3(4)-900/4000CVP

LIST OF MATERIAL - EXTERNAL COMPONENTS

No Projet / Project No.	No Dessin/ Drawing No.	Revision
2023-11911	D - 23-8460 - 4	0.0

TAG	LOCALISATION	SHEET	REF.
AC101	POWER PANEL	111	2G
AI201	CONTROL PANEL	214	4H
AI201	CONTROL PANEL	214	8H
AI202	CONTROL PANEL	215	4H
AI202	CONTROL PANEL	215	8H
AI203	CONTROL PANEL	216	4H
AI203	CONTROL PANEL	216	8H
AO201	CONTROL PANEL	217	1H
AO201	CONTROL PANEL	217	5H
AO202	CONTROL PANEL	218	1H
AO202	CONTROL PANEL	218	5H
BH401	ROTARY PRESS 1 – JB	410	7G
BH402	ROTARY PRESS 1 – JB	410	3C
BH403	ROTARY PRESS 1 – JB	410	3E
BH404	ROTARY PRESS 1 – JB	410	3G
BH405	ROTARY PRESS 1 – JB	410	3E
BH406	ROTARY PRESS 1 – JB	410	3H
BH407	ROTARY PRESS 1 – JB	410	3E
BH408	ROTARY PRESS 1 – JB	410	3H
BH409	ROTARY PRESS 1 – JB	410	7F
BH501	ROTARY PRESS 2 – JB	510	7G
BH502	ROTARY PRESS 2 – JB	510	3C
BH503	ROTARY PRESS 2 – JB	510	3E
BH504	ROTARY PRESS 2 – JB	510	3G
BH505	ROTARY PRESS 2 – JB	510	3E
BH506	ROTARY PRESS 2 – JB	510	3H
BH507	ROTARY PRESS 2 – JB	510	3E
BH508	ROTARY PRESS 2 – JB	510	3H
BH509	ROTARY PRESS 2 – JB	510	7F
CB1–1	POWER PANEL	112	1H
CB1–2	CONTROL PANEL	211	1H
CB10–2	CONTROL PANEL	211	5D
CB101	POWER PANEL	110	4C
CB102	POWER PANEL	111	1H
CB103	POWER PANEL	111	1G
CB2–1	POWER PANEL	112	1G
CB2–2	CONTROL PANEL	211	1D
CB201	CONTROL PANEL	210	1G
CB202	CONTROL PANEL	210	1E
CB203	CONTROL PANEL	210	1E
CB204	CONTROL PANEL	210	1C
CB205	CONTROL PANEL	210	5H
CB206	CONTROL PANEL	210	5C
CB3–2	CONTROL PANEL	211	1C
CB4–2	CONTROL PANEL	211	5H
CB5–2	CONTROL PANEL	211	5G
CB6–2	CONTROL PANEL	211	5G
CB7–2	CONTROL PANEL	211	5F
CB8–2	CONTROL PANEL	211	5F
CB9–2	CONTROL PANEL	211	5E
CR201	CONTROL PANEL	223	3F
CR202	CONTROL PANEL	223	3E
CR203	CONTROL PANEL	223	3E
CR204	CONTROL PANEL	223	3D
CR205	CONTROL PANEL	223	3C
CR206	CONTROL PANEL	223	7H
CR207	CONTROL PANEL	223	7G
CR208	CONTROL PANEL	223	7G
CR209	CONTROL PANEL	223	7F
CR210	CONTROL PANEL	223	7E
CR211	CONTROL PANEL	223	7E
CR212	CONTROL PANEL	223	7D
CR213	CONTROL PANEL	223	7C
CR214	CONTROL PANEL	224	3H

TAG	LOCALISATION	SHEET	REF.
CR215	CONTROL PANEL	224	3G
CR216	CONTROL PANEL	224	3G
DA201	CONTROL PANEL	210	3C
DI201	CONTROL PANEL	219	4H
DI201	CONTROL PANEL	220	4H
DI201	CONTROL PANEL	220	8H
DI202	CONTROL PANEL	221	4H
DO201	CONTROL PANEL	223	1H
DO202	CONTROL PANEL	224	1H
ESR101	POWER PANEL	113	1A
ESR201A	CONTROL PANEL	212	7H
ESR201B	CONTROL PANEL	212	1A
FIT–P33111	FIELD – RP–1 SYSTEM	214	2E
FIT–P33113	FIELD – RP–1 SYSTEM	214	2F
FIT–P33123	FIELD – RP–2 SYSTEM	215	2F
FIT–P33211	FIELD – RP–2 SYSTEM	215	2E
FU101	POWER PANEL	110	4F
FVC201	FIELD – RP–1 SYSTEM	219	2E
FVC202	FIELD – RP–2 SYSTEM	220	2G
FVO201	FIELD – RP–1 SYSTEM	219	2E
FVO202	FIELD – RP–2 SYSTEM	220	2H
GND101	POWER PANEL	110	2G
GND102	POWER PANEL	110	4D
GND201	CONTROL PANEL	210	2G
GND202	CONTROL PANEL	210	3D
GND203	CONTROL PANEL	214	7B
GND401	ROTARY PRESS 1 – JB	411	1G
GND501	ROTARY PRESS 2 – JB	511	1G
HS–P33110	POWER PANEL	116	3G
HS–P33120	POWER PANEL	115	3G
HS–P33210	POWER PANEL	116	7G
HS–P33220	POWER PANEL	115	7G
HSS–P33129	ROTARY PRESS 1 – JB	411	4H
HSS–P33229	ROTARY PRESS 2 – JB	511	4H
HUB101	POWER PANEL	112	2H
HUB201	CONTROL PANEL	211	2C
HUB202	CONTROL PANEL	211	2C
IP401	ROTARY PRESS 1 – JB	411	3G
IP501	ROTARY PRESS 2 – JB	511	3G
LC402	ROTARY PRESS 1	412	4F
LC403	ROTARY PRESS 1	412	4E
LC404	ROTARY PRESS 1	412	4D
LC501	ROTARY PRESS 2	512	4H
LC502	ROTARY PRESS 2	512	4F
LC503	ROTARY PRESS 2	512	4E
LCC402	ROTARY PRESS 1 – JB	412	2F
LCC403	ROTARY PRESS 1 – JB	412	2E
LCC404	ROTARY PRESS 1 – JB	412	2D
LCC501	ROTARY PRESS 2 – JB	512	2H
LCC502	ROTARY PRESS 2 – JB	512	2F
LCC503	ROTARY PRESS 2 – JB	512	2E
LF101A	POWER PANEL	110	5F
LF101B	POWER PANEL	110	5D
LF102A	POWER PANEL	110	6F
LF102B	POWER PANEL	110	6D
LF103A	POWER PANEL	110	7F
LF103B	POWER PANEL	110	7D
LF104A	POWER PANEL	110	8F
LF104B	POWER PANEL	110	8D
LT101	POWER PANEL	115	2C
LT102	POWER PANEL	115	2D
LT103	POWER PANEL	115	6C
LT104	POWER PANEL	115	6D
LT105	POWER PANEL	116	2C

TAG	LOCALISATION	SHEET	REF.
LT106	POWER PANEL	116	2D
LT107	POWER PANEL	116	6C
LT108	POWER PANEL	116	6D
LT201	CONTROL PANEL	210	3F
LT202	CONTROL PANEL	210	7E
LT301	HMI PANEL	310	3F
LT302	HMI PANEL	310	3E
MCR301	HMI PANEL	310	3G
MOT101	FIELD – RP–1 SYSTEM	110	5C
MOT102	FIELD – RP–2 SYSTEM	110	6C
MOT103	FIELD – RP–1 SYSTEM	110	7C
MOT104	FIELD – RP–2 SYSTEM	110	8C
MS101	POWER PANEL	110	5G
MS102	POWER PANEL	110	6G
MS103	POWER PANEL	110	7G
MS104	POWER PANEL	110	8G
OI301	HMI PANEL	310	3C
PD101	POWER PANEL	110	2H
PIT–P33115	FIELD – RP–1 SYSTEM	214	2H
PIT–P33215	FIELD – RP–2 SYSTEM	215	2H
PLC201	CONTROL PANEL	213	5H
PLCPS201	CONTROL PANEL	213	4H
POL201	FIELD	227	3G
POT101	POWER PANEL	115	2B
POT102	POWER PANEL	115	6B
POT103	POWER PANEL	116	2B
POT104	POWER PANEL	116	6B
PS101	POWER PANEL	111	2E
PS201	CONTROL PANEL	210	6E
PW101	POWER PANEL	110	3F
Q101	POWER PANEL	110	2H
RACK201	CONTROL PANEL	213	4G
REG401	ROTARY PRESS 1 – JB	410	7D
REG501	ROTARY PRESS 2 – JB	510	7D
RVC201	FIELD – RP–1 SYSTEM	219	2C
RVC202	FIELD – RP–2 SYSTEM	220	2F
RVO201	FIELD – RP–1 SYSTEM	219	2D
RVO202	FIELD – RP–2 SYSTEM	220	2G
S301	HMI PANEL	310	3H
SE401	ROTARY PRESS 1 – JB	410	2C
SE402	ROTARY PRESS 1 – JB	410	2B
SE403	ROTARY PRESS 1 – JB	410	2B
SE404	ROTARY PRESS 1 – JB	410	7D
SE501	ROTARY PRESS 2 – JB	510	2C
SE502	ROTARY PRESS 2 – JB	510	2B
SE503	ROTARY PRESS 2 – JB	510	2B
SE504	ROTARY PRESS 2 – JB	510	7D
SEL101	POWER PANEL	115	1H
SEL102	POWER PANEL	115	5H
SEL103	POWER PANEL	116	1H
SEL104	POWER PANEL	116	5H
SS101	POWER PANEL	111	2G
SS201	CONTROL PANEL	210	3E
T101	POWER PANEL	110	4D
TE401	ROTARY PRESS 1 – JB	410	5E
TE402	ROTARY PRESS 1 – JB	410	6G
TE403	ROTARY PRESS 1 – JB	410	6F
TE501	ROTARY PRESS 2 – JB	510	5E
TE502	ROTARY PRESS 2 – JB	510	6G
TE503	ROTARY PRESS 2 – JB	510	6F
TSH101	POWER PANEL	112	8H
UPS201	CONTROL PANEL	210	5G
VFD101	POWER PANEL	115	3G
VFD102	POWER PANEL	115	7G

TAG	LOCALISATION	SHEET	REF.
VFD103	POWER PANEL	116	3G
VFD104	POWER PANEL	116	7G
VT401	ROTARY PRESS 1 – JB	411	3E
VT501	ROTARY PRESS 2 – JB	511	3E
YC–P33124	ROTARY PRESS 1	411	8G
YC–P33126	ROTARY PRESS 1	411	8F
YC–P33128	ROTARY PRESS 1	411	8F
YC–P33222	ROTARY PRESS 2	511	8H
YC–P33224	ROTARY PRESS 2	511	8G
YC–P33226	ROTARY PRESS 2	511	8F
YE401	FIELD – RP–1 SYSTEM	410	4E
YE402	FIELD – RP–1 SYSTEM	410	4G
YE501	FIELD – RP–2 SYSTEM	510	4E
YE502	FIELD – RP–2 SYSTEM	510	4G

NOT TO BE USED FOR INSTALLATION
REV. 2.X
(FOR CONSTRUCTION)

Notes générales / General notes

Rev.	Description	Date	Dessiné / Drawn
0.0	FOR APPROVAL	04/07/2023	D. MARTEL

LES INDUSTRIES FOURNIER INC.
FOURNIER INDUSTRIES INC.
3787 BOUL. FRONTENAC OUEST
THETFORD MINES, QUÉBEC, CANADA, G6H 2B5

CE DESSIN ET TOUTES LES INFORMATIONS QU'IL CONTIENT SONT LA PROPRIÉTÉ EXCLUSIVE DE LES INDUSTRIES FOURNIER INC. IL EST STRICTEMENT INTERDIT DE COMMUNIQUER OU UTILISER SON CONTENU À D'AUTRES FINS QUE CELLES PERMISES ORIGNALEMENT OU POUVANT ÊTRE PRÉJUDICIABLES AUX INTÉRÊTS DE LES INDUSTRIES FOURNIER INC. TOUTE REPRODUCTION DE CE DESSIN EST INTERDITE ET IL DOIT ÊTRE RETOURNÉ SUR DEMANDE.

THIS DRAWING AND ALL THE INFORMATION IT CONTAINS ARE THE EXCLUSIVE PROPERTY OF FOURNIER INDUSTRIES INC. IT IS STRICTLY FORBIDDEN TO COMMUNICATE OR USE THE INFORMATION FOR PURPOSES OTHER THAN THE ORIGINAL INTENDED ONES OR IF THE USE COULD BE HARMFUL TO THE INTERESTS OF FOURNIER INDUSTRIES INC. THIS DRAWING IN WHOLE OR IN PART MAY NOT BE REPRODUCED IN ANY FASHION AND HAS TO BE RETURNED TO FOURNIER INDUSTRIES INC. UPON REQUEST.

Sceau / Stamp

Créer par / Created by: D. MARTEL
Vérifié / Checked: G. ARCAND
Approuvé / Approuved: M.–A. TURGEON
Date de création / Creation date: 16/06/2023
Échelle / Scale:

WINNIPEG, MB

2 X ROTARY PRESS 3(4)–900/4000CVP

LIST OF REFERENCES

No Projet / Project No.	No Dessin/ Drawing No.	Revision
2023-11911	D- 23-8460 - 5	0.0

* IMPORTANT – WIRING REQUIREMENTS

NOTE 1 : CONDUCTORS NEED TO BE PROPERLY IDENTIFIED WITH APPROPRIATE TAPE OR MARKERS.

NOTE 2 : CONDUCTORS NEED TO RESPECT THE FOLLOWING WIRING COLOR CODE.

* CUSTOM WIRING COLOR CODE

3 PHASES WIRING:

600 VAC – LINE 1	BLACK
600 VAC – LINE 2	BLACK
600 VAC – LINE 3	BLACK
GROUND	GREEN

GENERAL WIRING:

POWER – 120/240 VAC SUPPLY	BLACK
POWER – 120/240 VAC NEUTRAL	WHITE
POWER – 24 VDC SUPPLY (+)	BLUE
POWER – 24 VDC COMMON (–)	BROWN
DISCRETE CONTROL – AC	RED
DISCRETE CONTROL – DC	BLUE
INTRINSICALLY SAFE (IS)	IS (LIGHT) BLUE
PROTECTIVE EARTH (PE)	GREEN
SIGNAL GROUND / INSTRUMENTATION EARTH (IE)	GREEN/YELLOW

NOT TO BE USED FOR INSTALLATION

USE REV 2.X
(FOR CONSTRUCTION)

Notes générales / General notes

Rev.	Description	Date	Dessiné / Drawn
0.0	FOR APPROVAL	04/07/2023	D. MARTEL

LES INDUSTRIES FOURNIER INC.
FOURNIER INDUSTRIES INC.
3787 BOUL. FRONTENAC OUEST
THETFORD MINES, QUÉBEC, CANADA, G6H 2B5

CE DESSIN ET TOUTES LES INFORMATIONS QU'IL CONTIENT SONT LA PROPRIÉTÉ EXCLUSIVE DE LES INDUSTRIES FOURNIER INC. IL EST STRICTEMENT INTERDIT DE COMMUNIQUER OU UTILISER SON CONTENU À D'AUTRES FINS QUE CELLES PERMISES ORIGINALEMENT OU POUVANT ÊTRE PRÉJUDICIABLES AUX INTÉRÊTS DE LES INDUSTRIES FOURNIER INC. TOUTE REPRODUCTION DE CE DESSIN EST INTERDITE ET IL DOIT ÊTRE RETOURNÉ SUR DEMANDE.

THIS DRAWING AND ALL THE INFORMATION IT CONTAINS ARE THE EXCLUSIVE PROPERTY OF FOURNIER INDUSTRIES INC. IT IS STRICTLY FORBIDDEN TO COMMUNICATE OR USE THE INFORMATION FOR PURPOSES OTHER THAN THE ORIGINAL INTENDED ONES OR IF THE USE COULD BE HARMFUL TO THE INTERESTS OF FOURNIER INDUSTRIES INC. THIS DRAWING IN WHOLE OR IN PART MAY NOT BE REPRODUCED IN ANY FASHION AND HAS TO BE RETURNED TO FOURNIER INDUSTRIES INC. UPON REQUEST.

Sceau / Stamp

Créer par / Created by	D. MARTEL
Vérifié / Checked	G. ARCAND
Approuvé / Approuved	M.–A. TURGEON
Date de création / Creation date	16/06/2023
Échelle / Scale	

WINNIPEG, MB

2 X ROTARY PRESS 3(4)–900/4000CVP

ASSEMBLY & WIRING INSTRUCTIONS

No Projet / Project No.	No Dessin/ Drawing No.	Revision
2023-11911	D - 23-8460 - 6	0.0

FRONT VIEW

LCP–3110A

60"(H) x 36"(W) x 12"(D)
(1524 x 914 x 305 mm)

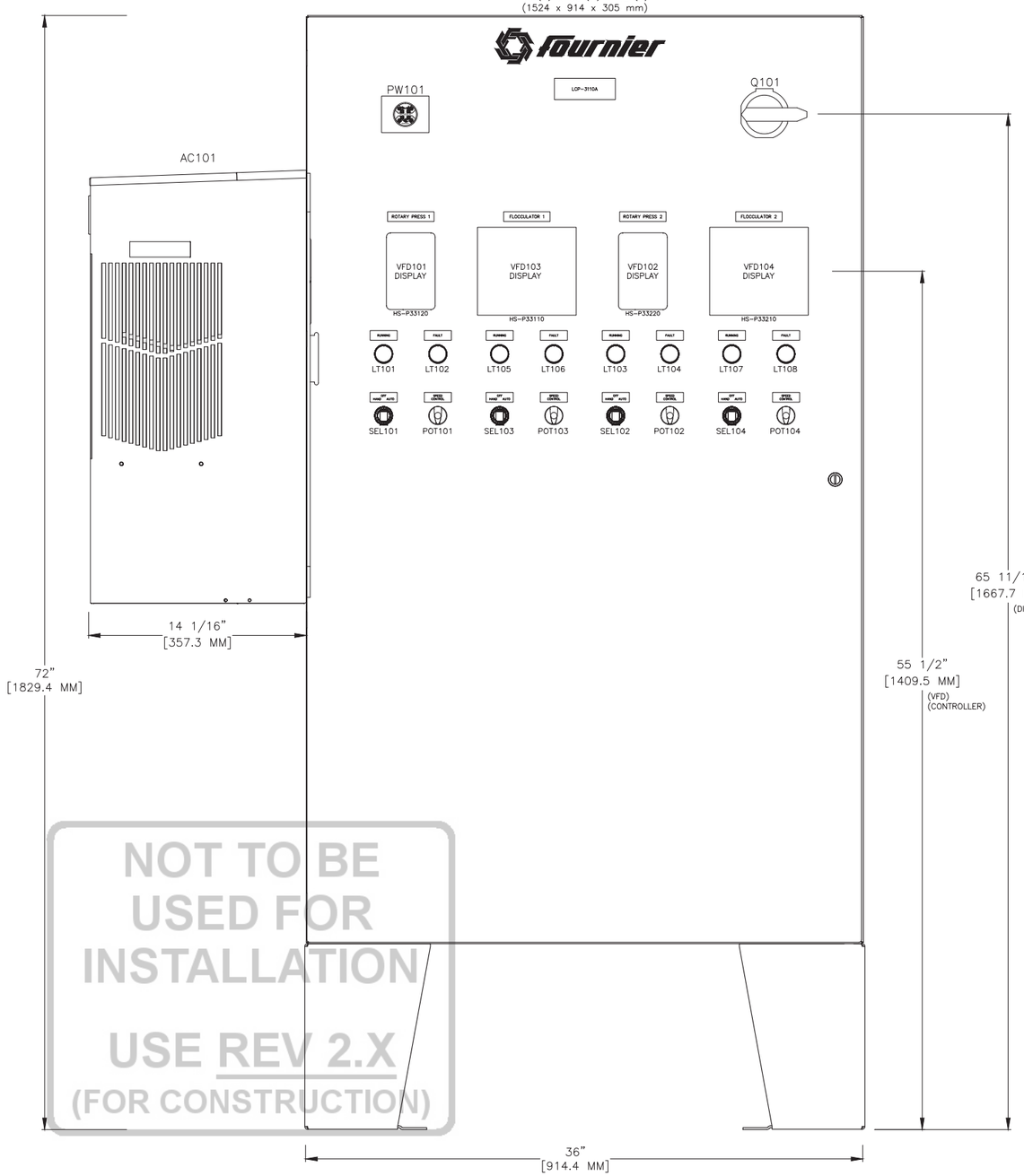

NOT TO BE USED FOR INSTALLATION

USE REV 2.X
(FOR CONSTRUCTION)

BACKPLATE

BP101

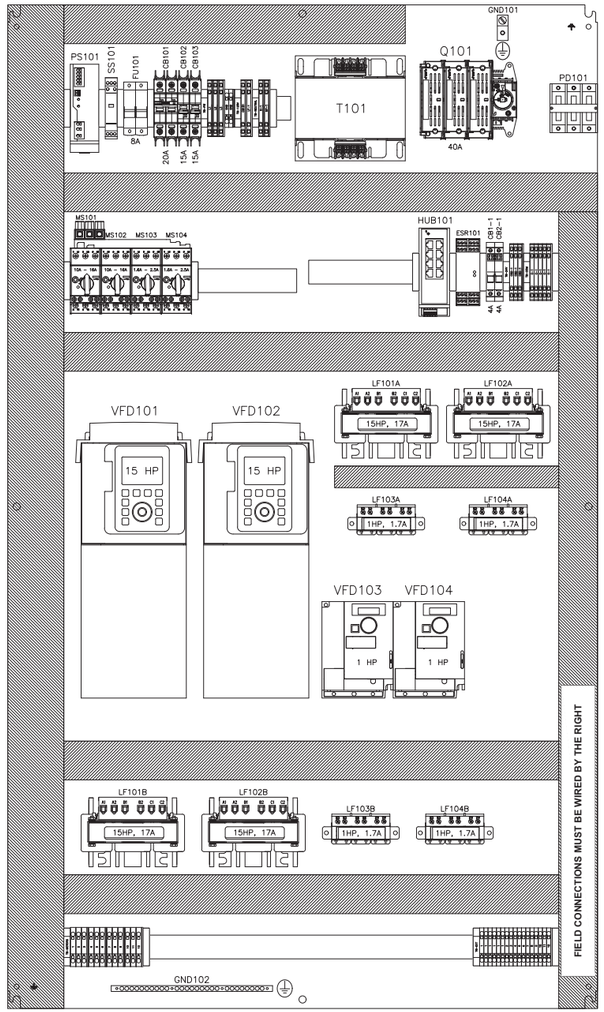

* INSTALLED INSIDE. ON THE RIGHT SIDE OF THE PANEL.

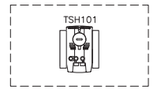

Notes générales / General notes

* IMPORTANT
FINAL DESIGN WILL BE ON
"FOR CONSTRUCTION" REVISION

Rev.	Description	Date	Dessiné / Drawn
0.0	FOR APPROVAL	04/07/2023	D. MARTEL

LES INDUSTRIES FOURNIER INC.
FOURNIER INDUSTRIES INC.
3787 BOUL. FRONTENAC OUEST
THETFORD MINES, QUÉBEC, CANADA, G6H 2B5

CE DESSIN ET TOUTES LES INFORMATIONS QU'IL CONTIENT SONT LA PROPRIÉTÉ EXCLUSIVE DE LES INDUSTRIES FOURNIER INC. IL EST STRICTEMENT INTERDIT DE COMMUNIQUER OU UTILISER SON CONTENU À D'AUTRES FINS QUE CELLES PERMISES ORIGINALEMENT OU POUVANT ÊTRE PRÉJUDICIABLES AUX INTÉRÊTS DE LES INDUSTRIES FOURNIER INC. TOUTE REPRODUCTION DE CE DESSIN EST INTERDITE ET IL DOIT ÊTRE RETOURNÉ SUR DEMANDE.

THIS DRAWING AND ALL THE INFORMATION IT CONTAINS ARE THE EXCLUSIVE PROPERTY OF FOURNIER INDUSTRIES INC. IT IS STRICTLY FORBIDDEN TO COMMUNICATE OR USE THE INFORMATION FOR PURPOSES OTHER THAN THE ORIGINAL INTENDED ONES OR IF THE USE COULD BE HARMFUL TO THE INTERESTS OF FOURNIER INDUSTRIES INC. THIS DRAWING IN WHOLE OR IN PART MAY NOT BE REPRODUCED IN ANY FASHION AND HAS TO BE RETURNED TO FOURNIER INDUSTRIES INC. UPON REQUEST.

Sceau / Stamp

Créer par / Created by	D. MARTEL
Vérifié / Checked	G. ARCAND
Approuvé / Approuved	M.–A. TURGEON
Date de création / Creation date	16/06/2023
Échelle / Scale	

WINNIPEG, MB

2 X ROTARY PRESS 3(4)–900/4000CVP

POWER PANEL
GENERAL ARRANGEMENT

No Projet / Project No.	No Dessin/ Drawing No.	Revision
2023-11911	D - 23-8460 - 100	0.0

TAG	QTY	DESCRIPTION	CAT. NO.	CAT. NO. (FOURNIER)	MANUFACTURER
AC101	1	AIR CONDITIONER 4000 BTU, 120V 60HZ, NEMA 12, 3R, 4	N280416G050	HOF-N280416G050	HOFFMAN
BP101	1	GALVANIZED BACK PLATE 60" X 36"	CP6036G	HOF-CP6036G	HOFFMAN
CB1-1	1	UT 6-TMC M, THERMOMAGNETIC BREAKER, 1P, 4A, MAX 240VAC, MAX 24VDC	0916606	PHO-0916606	PHOENIX CONTACT
CB101	1	CIRCUIT BREAKER, 2 POLE, 20A, 480Y/277VAC, 96VDC, UL489/CSA 22.2, CURVE C	1489-M2C200		AB
CB102	1	CIRCUIT BREAKER, 1 POLE, 15A, 277VAC, 48VDC, UL489/CSA 22.2, CURVE C	1489-M1C150	ALL-1489-M1C150	AB
CB103	1	CIRCUIT BREAKER, 1 POLE, 15A, 277VAC, 48VDC, UL489/CSA 22.2, CURVE C	1489-M1C150	ALL-1489-M1C150	AB
CB2-1	1	UT 6-TMC M, THERMOMAGNETIC BREAKER, 1P, 4A, MAX 240VAC, MAX 24VDC	0916606	PHO-0916606	PHOENIX CONTACT
EB101	11	END BRACKET, CLIPFIX 35, GREY	3022218	PHO-3022218KE	PHOENIX CONTACT
ESR101	1	SAFETY RELAY EXPANSION MODULE, 5 SPST-NO, 1 SPST-NC, 24 VDC	2963734	PHO-2963734	PHOENIX CONTACT
FU101	1	2 POLE FUSE BLOCK - CLASS CC	USCC2	FER-USCC2	FERRAZ SHAWMUT
	2	FUSE - CLASS CC - 8A	ATQR8		FERRAZ SHAWMUT
GND101	1	TERMINAL, ALUMINIUM, 2/0AWG, 1/4	LAMA2/0-14-QY	PAN-LAMA2/014-QYKE	PANDUIT
GND102	1	TERMINAL ALUMINIUM #6-2/0 CU/AL, 9.25", 27 SCREW CONNECTIONS, 1/4	PK27GTA	SCH-PK27GTAKE	SCHNEIDER ELECTRIC
HS-P33110	1	ALTIVAR 320, DISPLAY TERMINAL MOUNTING KIT	VW3A1102		SCHNEIDER ELECTRIC
	1	ALTIVAR 320, DISPLAY TERMINAL	VW3A1101		SCHNEIDER ELECTRIC
HS-P33120	1	ALTIVAR 630/930, DISPLAY TERMINAL MOUNTING KIT	VW3A1112		SCHNEIDER ELECTRIC
HS-P33210	1	ALTIVAR 320, DISPLAY TERMINAL MOUNTING KIT	VW3A1102		SCHNEIDER ELECTRIC
	1	ALTIVAR 320, DISPLAY TERMINAL	VW3A1101		SCHNEIDER ELECTRIC
HS-P33220	1	ALTIVAR 630/930, DISPLAY TERMINAL MOUNTING KIT	VW3A1112		SCHNEIDER ELECTRIC
HUB101	1	INDUSTRIAL ETHERNET SWITCH, MANAGED, 8 PORTS, 10/100 MBPS, 24 VDC	2702324	PHO-2702324	PHOENIX CONTACT
LCP-3110A	1	CONCEPT WALL-MOUNT ENCLOSURE (60" X 36" X 12"), NEMA 4, 12, 13, IP66	CSD603612		HOFFMAN
	1	CORROSION INHIBITOR, EMITTER FOR 10 CUBIC FOOT (12 PER PACKAGE)	AHCI10E	HOF-AHCI10EKE	HOFFMAN
	1	CORROSION INHIBITOR, EMITTER FOR 5 CUBIC FOOT (25 PER PACKAGE)	AHCI5E	HOF-AHCI5EKE	HOFFMAN
	1	DATA POCKET 12" X 12"	ADP2		HOFFMAN
	1	FLOOR STAND KIT, STEEL, 12" X 12", NEMA 4, 12	AFK1212		HOFFMAN
LF101A	1	LINE REACTOR, 575/600V, 3% IMPEDANCE, 15 HP, 17A	KDRB45L		TRANSFAB
LF101B	1	LINE REACTOR, 575/600V, 3% IMPEDANCE, 15 HP, 17A	KDRB45L		TRANSFAB
LF102A	1	LINE REACTOR, 575/600V, 3% IMPEDANCE, 15 HP, 17A	KDRB45L		TRANSFAB
LF102B	1	LINE REACTOR, 575/600V, 3% IMPEDANCE, 15 HP, 17A	KDRB45L		TRANSFAB
LF103A	1	LINE REACTOR, 575/600V, 3% IMPEDANCE, 1 HP, 1.7A	KDRMA45L1		TRANSFAB
LF103B	1	LINE REACTOR, 575/600V, 3% IMPEDANCE, 1 HP, 1.7A	KDRMA45L1		TRANSFAB
LF104A	1	LINE REACTOR, 575/600V, 3% IMPEDANCE, 1 HP, 1.7A	KDRMA45L1		TRANSFAB
LF104B	1	LINE REACTOR, 575/600V, 3% IMPEDANCE, 1 HP, 1.7A	KDRMA45L1		TRANSFAB
LT101	1	PLASTIC PILOT LIGHT, 22.5MM, FLUSH, GREEN, IP66	800FP-P3		AB
	1	METAL LATCH FOR 800F OPERATOR	800F-ALM	ALL-800FALMKE	AB
	1	INTEGRATED LED - GREEN, 24V AC/DC	800F-N3G		AB
LT102	1	PLASTIC PILOT LIGHT, 22.5MM, FLUSH, ORANGE, IP66	800FP-P0		AB
	1	METAL LATCH FOR 800F OPERATOR	800F-ALM	ALL-800FALMKE	AB
	1	INTEGRATED LED - WHITE, 24V AC/DC	800F-N3W	ALL-800F-N3W	AB
LT103	1	PLASTIC PILOT LIGHT, 22.5MM, FLUSH, GREEN, IP66	800FP-P3		AB
	1	METAL LATCH FOR 800F OPERATOR	800F-ALM	ALL-800FALMKE	AB
	1	INTEGRATED LED - GREEN, 24V AC/DC	800F-N3G		AB
LT104	1	PLASTIC PILOT LIGHT, 22.5MM, FLUSH, ORANGE, IP66	800FP-P0		AB
	1	METAL LATCH FOR 800F OPERATOR	800F-ALM	ALL-800FALMKE	AB
	1	INTEGRATED LED - WHITE, 24V AC/DC	800F-N3W	ALL-800F-N3W	AB
LT105	1	PLASTIC PILOT LIGHT, 22.5MM, FLUSH, GREEN, IP66	800FP-P3		AB
	1	METAL LATCH FOR 800F OPERATOR	800F-ALM	ALL-800FALMKE	AB
	1	INTEGRATED LED - GREEN, 24V AC/DC	800F-N3G		AB
LT106	1	PLASTIC PILOT LIGHT, 22.5MM, FLUSH, ORANGE, IP66	800FP-P0		AB
	1	METAL LATCH FOR 800F OPERATOR	800F-ALM	ALL-800FALMKE	AB
	1	INTEGRATED LED - WHITE, 24V AC/DC	800F-N3W	ALL-800F-N3W	AB
LT107	1	PLASTIC PILOT LIGHT, 22.5MM, FLUSH, GREEN, IP66	800FP-P3		AB
	1	METAL LATCH FOR 800F OPERATOR	800F-ALM	ALL-800FALMKE	AB
	1	INTEGRATED LED - GREEN, 24V AC/DC	800F-N3G		AB
LT108	1	PLASTIC PILOT LIGHT, 22.5MM, FLUSH, ORANGE, IP66	800FP-P0		AB

TAG	QTY	DESCRIPTION	CAT. NO.	CAT. NO. (FOURNIER)	MANUFACTURER
	1	METAL LATCH FOR 800F OPERATOR	800F-ALM	ALL-800FALMKE	AB
	1	INTEGRATED LED - WHITE, 24V AC/DC	800F-N3W	ALL-800F-N3W	AB
MS101	1	140MT, MOTOR PROTECTION CIRCUIT BREAKER, STD MAGNETIC TRIP, 10A TO 16A, (C-FRAME)	140MT-C3E-C16		AB
	1	COMPACT BUSBAR FEEDER TERMINAL, FOR 140MT-C, 140MT-D, NOMINAL 64A, UL	140MT-C-WTEN		AB
	1	140MT, 3-PHASE COMM. LINK FOR 140MT-C,-D, 45MM SPACING, 4 STARTERS, NOMINAL 64A	140MT-C-W454		AB
MS102	1	140MT, MOTOR PROTECTION CIRCUIT BREAKER, STD MAGNETIC TRIP, 10A TO 16A, (C-FRAME)	140MT-C3E-C16		AB
MS103	1	140MT, MOTOR PROTECTION CIRCUIT BREAKER, STD MAGNETIC TRIP, 1.6A TO 2.5A, (C-FRAME)	140MT-C3E-B25		AB
MS104	1	140MT, MOTOR PROTECTION CIRCUIT BREAKER, STD MAGNETIC TRIP, 1.6A TO 2.5A, (C-FRAME)	140MT-C3E-B25		AB
PD101	1	POWER DISTRIBUTION BLOCK, 175A, 600V, LINE : 1 X 2/0 TO #14AWG, LOAD 4 X #4 TO #14 AWG	1492-PD3141	ALL-1492PD3141KE	AB
	1	POWER BLOCK COVER FOR 1492-PD3141 and 1492-100X	1492-PBC1	ALL-1492-PBC1	AB
POT101	1	POTENTIOMETER OPERATOR, COMPLETE KIT, SINGLE TURN, 22.5MM, 10K OHM, BLACK	800FP-POT6		AB
POT102	1	POTENTIOMETER OPERATOR, COMPLETE KIT, SINGLE TURN, 22.5MM, 10K OHM, BLACK	800FP-POT6		AB
POT103	1	POTENTIOMETER OPERATOR, COMPLETE KIT, SINGLE TURN, 22.5MM, 10K OHM, BLACK	800FP-POT6		AB
POT104	1	POTENTIOMETER OPERATOR, COMPLETE KIT, SINGLE TURN, 22.5MM, 10K OHM, BLACK	800FP-POT6		AB
PS101	1	TRIO POWER SUPPLY, 24...28 VDC, 100...240 VAC INPUT VOLTAGE, 240W, 10A	2903149	PHO-PS24V10A	PHOENIX CONTACT
PW101	1	POWER WARNING ALERT 40-750VAC 1PH OR 3PH	R-3W		GRACE ENGINEER
	1	POWER WARNING ALERT LABEL	R-3W-L	GRA-R3W-LKE	GRACE ENGINEER
Q101	1	RED/YELLOW OPERATING HANDLES UP TO 60A DISCONNECT SWITCHES	194R-PY	ALL-194R-PY	AB
	1	DISCONNECT SWITCH, 31-60A, 3P, FUSING TYPE: UL CLASS J/CSA HRCI-J, OPEN STYLE, 194R	194R-J60-1753	ALL-194R-J60-1753	AB
	1	12" OPERATING SHAFT FOR DISCONNECT SWITCH 30A TO 60A	194R-S1	ALL-194R-S1	AB
	3	FUSE - CLASS J - 40A	AJT40	GOU-AJT40KE	FERRAZ SHAWMUT
SEL101	1	800F 3 POSITION SELECTOR SWITCH - PLASTIC, MAINTAINED, BLACK, STANDARD KNOB, STANDARD ORIENTATION	800FP-SM32		AB
	1	METAL LATCH FOR 800F OPERATOR	800F-ALM	ALL-800FALMKE	AB
	4	SCREW CONTACT BLOCK 1 N.O FOR 22.5MM OPERATOR	800F-X10	ALL-800FX10KE	AB
SEL102	1	800F 3 POSITION SELECTOR SWITCH - PLASTIC, MAINTAINED, BLACK, STANDARD KNOB, STANDARD ORIENTATION	800FP-SM32		AB
	1	METAL LATCH FOR 800F OPERATOR	800F-ALM	ALL-800FALMKE	AB
	4	SCREW CONTACT BLOCK 1 N.O FOR 22.5MM OPERATOR	800F-X10	ALL-800FX10KE	AB
SEL103	1	800F 3 POSITION SELECTOR SWITCH - PLASTIC, MAINTAINED, BLACK, STANDARD KNOB, STANDARD ORIENTATION	800FP-SM32		AB
	1	METAL LATCH FOR 800F OPERATOR	800F-ALM	ALL-800FALMKE	AB
	4	SCREW CONTACT BLOCK 1 N.O FOR 22.5MM OPERATOR	800F-X10	ALL-800FX10KE	AB
SEL104	1	800F 3 POSITION SELECTOR SWITCH - PLASTIC, MAINTAINED, BLACK, STANDARD KNOB, STANDARD ORIENTATION	800FP-SM32		AB
	1	METAL LATCH FOR 800F OPERATOR	800F-ALM	ALL-800FALMKE	AB
	4	SCREW CONTACT BLOCK 1 N.O FOR 22.5MM OPERATOR	800F-X10	ALL-800FX10KE	AB
SS101	1	SURGE SUPPRESSOR 120V 26A, FOR 3-CONDUCTOR SYSTEM (L1, N, PE), SCREW	2907918	PHO-2907918	PHOENIX CONTACT
T101	1	TRANSFORMER 480-600/120-240 2000VA	SP2000ACP	HAM-SP2000ACP	HAMMOND
	2	FINGER GUARDS, FOR TRANSFORMER KHP-SP-NJ, (50-1500VA), ACP-MQMJ (50-3000VA)	SPFG1	HPS-SPFG1KE	HAMMOND
TB-120V	1	GROUP MARKER FOR END BRACKET CLIPFIX 35, HEIGHT-ADJUSTABLE, GRAY	0811969	PHO-0811969KE	PHOENIX CONTACT
	2	PTTB4, PUSH-IN TERMINAL, 2 LEVELS, 28A, GREY, 10-24 AWG	3211786	PHO-3211786KE	PHOENIX CONTACT
	2	PTTB4 PARTITION PLATE, GREY, (D-STTB4)	3030462	PHO-3030462KE	PHOENIX CONTACT
TB-24V	1	GROUP MARKER FOR END BRACKET CLIPFIX 35, HEIGHT-ADJUSTABLE, GRAY	0811969	PHO-0811969KE	PHOENIX CONTACT
	3	PTTB4, PUSH-IN TERMINAL, 2 LEVELS, 28A, GREY, 10-24 AWG	3211786	PHO-3211786KE	PHOENIX CONTACT
	1	PTTB4 PARTITION PLATE, GREY, (D-STTB4)	3030462	PHO-3030462KE	PHOENIX CONTACT
TB-COM	1	END BRACKET, CLIPFIX 35, GREY	3022218	PHO-3022218KE	PHOENIX CONTACT
	1	GROUP MARKER FOR END BRACKET CLIPFIX 35, HEIGHT-ADJUSTABLE, GRAY	0811969	PHO-0811969KE	PHOENIX CONTACT
	5	PTTB4, PUSH-IN TERMINAL, 2 LEVELS, 28A, GREY, 10-24 AWG	3211786	PHO-3211786KE	PHOENIX CONTACT
	1	PTTB4 PARTITION PLATE, GREY, (D-STTB4)	3030462	PHO-3030462KE	PHOENIX CONTACT
TB-EXT	1	END BRACKET, CLIPFIX 35, GREY	3022218	PHO-3022218KE	PHOENIX CONTACT
	1	GROUP MARKER FOR END BRACKET CLIPFIX 35, HEIGHT-ADJUSTABLE, GRAY	0811969	PHO-0811969KE	PHOENIX CONTACT
	1	PT4 PARTITION PLATE, GREY, (D-ST4)	3030420	PHO-3030420KE	PHOENIX CONTACT
	17	PT4, PUSH-IN TERMINAL, 1 LEVEL, 32A, GREY, 10-24 AWG	3211757	PHO-3211757KE	PHOENIX CONTACT
TB-MOTORS	1	END BRACKET, CLIPFIX 35, GREY	3022218	PHO-3022218KE	PHOENIX CONTACT
	1	GROUP MARKER FOR END BRACKET CLIPFIX 35, LONG, HEIGHT-ADJUSTABLE, GRAY	0814788	PHO-0814788KE	PHOENIX CONTACT
	12	PT6, PUSH-IN TERMINAL, 1 LEVEL, 41A, GREY, 8-20 AWG	3211813	PHO-3211813KE	PHOENIX CONTACT
	4	PT6 PARTITION PLATE, GREY, (D-PT6)	3212044	PHO-3212044KE	PHOENIX CONTACT
TB-NEUTRAL	1	END BRACKET, CLIPFIX 35, GREY	3022218	PHO-3022218KE	PHOENIX CONTACT

NOT FOR CONSTRUCTION
INSPECTION
USE REV 2.X
(FOR CONSTRUCTION)

Notes générales / General notes

Rev.	Description	Date	Dessiné / Drawn
0.0	FOR APPROVAL	04/07/2023	D. MARTEL

LES INDUSTRIES FOURNIER INC.
FOURNIER INDUSTRIES INC.
3787 BOUL. FRONTENAC OUEST
THETFORD MINES, QUÉBEC, CANADA, G6H 2B5

CE DESSIN ET TOUTES LES INFORMATIONS QU'IL CONTIENT SONT LA PROPRIÉTÉ EXCLUSIVE DE LES INDUSTRIES FOURNIER INC. IL EST STRICTEMENT INTERDIT DE COMMUNIQUER OU UTILISER SON CONTENU À D'AUTRES FINS QUE CELLES PERMISES ORIGINALEMENT OU POUVANT ÊTRE PRÉJUDICIABLES AUX INTÉRÊTS DE LES INDUSTRIES FOURNIER INC. TOUTE REPRODUCTION DE CE DESSIN EST INTERDITE ET IL DOIT ÊTRE RETOURNÉ SUR DEMANDE.

THIS DRAWING AND ALL THE INFORMATION IT CONTAINS ARE THE EXCLUSIVE PROPERTY OF FOURNIER INDUSTRIES INC. IT IS STRICTLY FORBIDDEN TO COMMUNICATE OR USE THE INFORMATION FOR PURPOSES OTHER THAN THE ORIGINAL INTENDED ONES OR IF THE USE COULD BE HARMFUL TO THE INTERESTS OF FOURNIER INDUSTRIES INC. THIS DRAWING IN WHOLE OR IN PART MAY NOT BE REPRODUCED IN ANY FASHION AND HAS TO BE RETURNED TO FOURNIER INDUSTRIES INC. UPON REQUEST.

Sceau / Stamp

Créer par / Created by	D. MARTEL
Vérifié / Checked	G. ARCAND
Approuvé / Approuved	M.-A. TURGEON
Date de création / Creation date	16/06/2023
Échelle / Scale	

WINNIPEG, MB

2 X ROTARY PRESS 3(4)-900/4000CVP

POWER PANEL
LIST OF MATERIAL - (1 OF 2)

No Projet / Project No.	No Dessin/ Drawing No.	Revision
2023-11911	D - 23-8460 - 101	0.0

TAG	QTY	DESCRIPTION	CAT. NO.	CAT. NO. (FOURNIER)	MANUFACTURER
	1	GROUP MARKER FOR END BRACKET CLIPFIX 35, HEIGHT-ADJUSTABLE, GRAY	0811969	PHO-0811969KE	PHOENIX CONTACT
	2	PTTB4, PUSH-IN TERMINAL, 2 LEVELS, 28A, GREY, 10-24 AWG	3211786	PHO-3211786KE	PHOENIX CONTACT
	2	PTTB4 PARTITION PLATE, GREY, (D-STTB4)	3030462	PHO-3030462KE	PHOENIX CONTACT
TB-PW	1	GROUP MARKER FOR END BRACKET CLIPFIX 35, HEIGHT-ADJUSTABLE, GRAY	0811969	PHO-0811969KE	PHOENIX CONTACT
	3	PTTB4, PUSH-IN TERMINAL, 2 LEVELS, 28A, GREY, 10-24 AWG	3211786	PHO-3211786KE	PHOENIX CONTACT
	3	PTTB4 PARTITION PLATE, GREY, (D-STTB4)	3030462	PHO-3030462KE	PHOENIX CONTACT
	2	PT4-PE, PUSH-IN TERMINAL, 1 LEVEL, GND, YELLOW/GREEN, 10-24 AWG	3211766	PHO-3211766KE	PHOENIX CONTACT
	1	PT4 PARTITION PLATE, GREY, (D-ST4)	3030420	PHO-3030420KE	PHOENIX CONTACT
TSH101	1	THERMOSTAT, CONTROL COOLING (NO) EQUIPEMENTS, CELSIUS	SKT011419NO-C	HAM-SKT011419NOCKE	HAMMOND
VFD101	1	ALTIVAR 930, 600VAC, VFD 20HP ND, 15HP HD, WITH HMI	ATV930D15S6X		SCHNEIDER ELECTRIC
VFD102	1	ALTIVAR 930, 600VAC, VFD 20HP ND, 15HP HD, WITH HMI	ATV930D15S6X		SCHNEIDER ELECTRIC
VFD103	1	ALTIVAR 320, 525-600VAC, VFD 1 HP HD, 0.75KW	ATV320U07S6C		SCHNEIDER ELECTRIC
	1	ALTIVAR 320, DUAL-PORT MODBUS & ETHERNET/IP MODULE	VW3A3616		SCHNEIDER ELECTRIC
	1	ALTIVAR 320, COMMUNICATION CARD ADAPTATOR MODULE	VW3A3600		SCHNEIDER ELECTRIC
VFD104	1	ALTIVAR 320, 525-600VAC, VFD 1 HP HD, 0.75KW	ATV320U07S6C		SCHNEIDER ELECTRIC
	1	ALTIVAR 320, DUAL-PORT MODBUS & ETHERNET/IP MODULE	VW3A3616		SCHNEIDER ELECTRIC
	1	ALTIVAR 320, COMMUNICATION CARD ADAPTATOR MODULE	VW3A3600		SCHNEIDER ELECTRIC

NOT TO BE USED FOR INSTALLATION

USE REV 2.X
(FOR CONSTRUCTION)

Notes générales / General notes

Rev.	Description	Date	Dessiné / Drawn
0.0	FOR APPROVAL	04/07/2023	D. MARTEL

LES INDUSTRIES FOURNIER INC.
FOURNIER INDUSTRIES INC.
3787 BOUL. FRONTENAC OUEST
THETFORD MINES, QUÉBEC, CANADA, G6H 2B5

CE DESSIN ET TOUTES LES INFORMATIONS QU'IL CONTIENT SONT LA PROPRIÉTÉ EXCLUSIVE DE LES INDUSTRIES FOURNIER INC. IL EST STRICTEMENT INTERDIT DE COMMUNIQUER OU UTILISER SON CONTENU À D'AUTRES FINS QUE CELLES PERMISES ORIGINALEMENT OU POUVANT ÊTRE PRÉJUDICIABLES AUX INTÉRÊTS DE LES INDUSTRIES FOURNIER INC. TOUTE REPRODUCTION DE CE DESSIN EST INTERDITE ET IL DOIT ÊTRE RETOURNÉ SUR DEMANDE.

THIS DRAWING AND ALL THE INFORMATION IT CONTAINS ARE THE EXCLUSIVE PROPERTY OF FOURNIER INDUSTRIES INC. IT IS STRICTLY FORBIDDEN TO COMMUNICATE OR USE THE INFORMATION FOR PURPOSES OTHER THAN THE ORIGINAL INTENDED ONES OR IF THE USE COULD BE HARMFUL TO THE INTERESTS OF FOURNIER INDUSTRIES INC. THIS DRAWING IN WHOLE OR IN PART MAY NOT BE REPRODUCED IN ANY FASHION AND HAS TO BE RETURNED TO FOURNIER INDUSTRIES INC. UPON REQUEST.

Sceau / Stamp

Créer par / Created by	D. MARTEL
Vérifié / Checked	G. ARCAND
Approuvé / Approuved	M.-A. TURGEON
Date de création / Creation date	16/06/2023
Échelle / Scale	

WINNIPEG, MB
2 X ROTARY PRESS 3(4)-900/4000CVP

POWER PANEL
LIST OF MATERIAL – (2 OF 2)

No Projet / Project No.	No Dessin/ Drawing No.	Revision
2023-11911	D - 23-8460 - 102	0.0

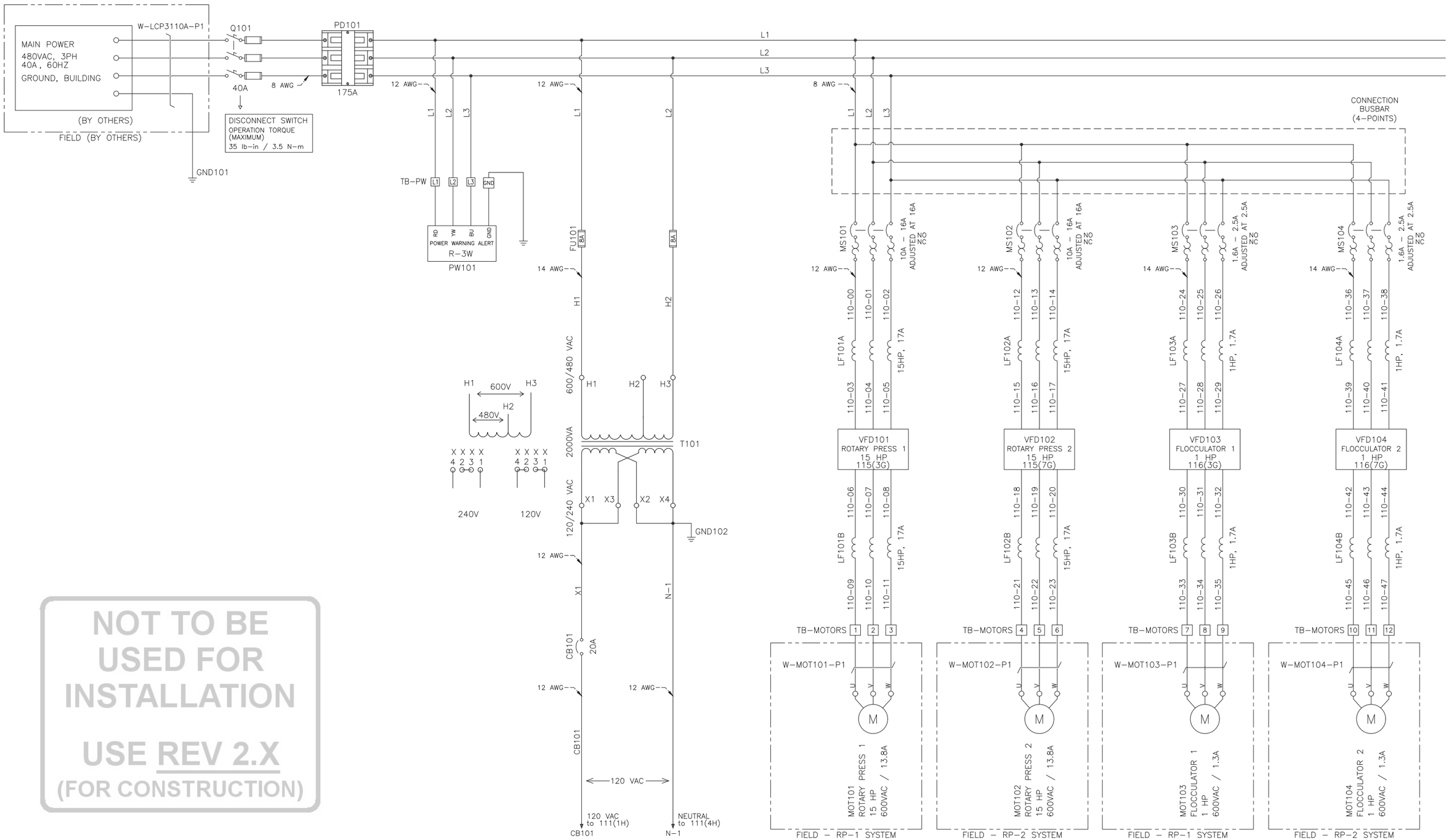

NOT TO BE USED FOR INSTALLATION

USE REV 2.X
(FOR CONSTRUCTION)

Notes générales / General notes

Rev.	Description	Date	Dessiné / Drawn
0.0	FOR APPROVAL	04/07/2023	D. MARTEL

LES INDUSTRIES FOURNIER INC.
FOURNIER INDUSTRIES INC.
3787 BOUL. FRONTENAC OUEST
THETFORD MINES, QUÉBEC, CANADA, G6H 2B5

CE DESSIN ET TOUTES LES INFORMATIONS QU'IL CONTIENT SONT LA PROPRIÉTÉ EXCLUSIVE DE LES INDUSTRIES FOURNIER INC.. IL EST STRICTEMENT INTERDIT DE COMMUNIQUER OU UTILISER SON CONTENU À D'AUTRES FINS QUE CELLES PERMISES ORIGINALEMENT OU POUVANT ÊTRE PRÉJUDICIABLES AUX INTÉRÊTS DE LES INDUSTRIES FOURNIER INC.. TOUTE REPRODUCTION DE CE DESSIN EST INTERDITE ET IL DOIT ÊTRE RETOURNÉ SUR DEMANDE.

THIS DRAWING AND ALL THE INFORMATION IT CONTAINS ARE THE EXCLUSIVE PROPERTY OF FOURNIER INDUSTRIES INC.. IT IS STRICTLY FORBIDDEN TO COMMUNICATE OR USE THE INFORMATION FOR PURPOSES OTHER THAN THE ORIGINAL INTENDED ONES OR IF THE USE COULD BE HARMFUL TO THE INTERESTS OF FOURNIER INDUSTRIES INC.. THIS DRAWING IN WHOLE OR IN PART MAY NOT BE REPRODUCED IN ANY FASHION AND HAS TO BE RETURNED TO FOURNIER INDUSTRIES INC. UPON REQUEST.

Sceau / Stamp

Créer par / Created by	D. MARTEL
Vérifié / Checked	G. ARCAND
Approuvé / Approuved	M.-A. TURGEON
Date de création / Creation date	16/06/2023
Échelle / Scale	

WINNIPEG, MB

2 X ROTARY PRESS 3(4)-900/4000CVP

POWER PANEL
ELECTRICAL ARRANGEMENT - 480 VAC

No Projet / Project No.	No Dessin/ Drawing No.	Revision
2023-11911	D- 23-8460 - 110	0.0

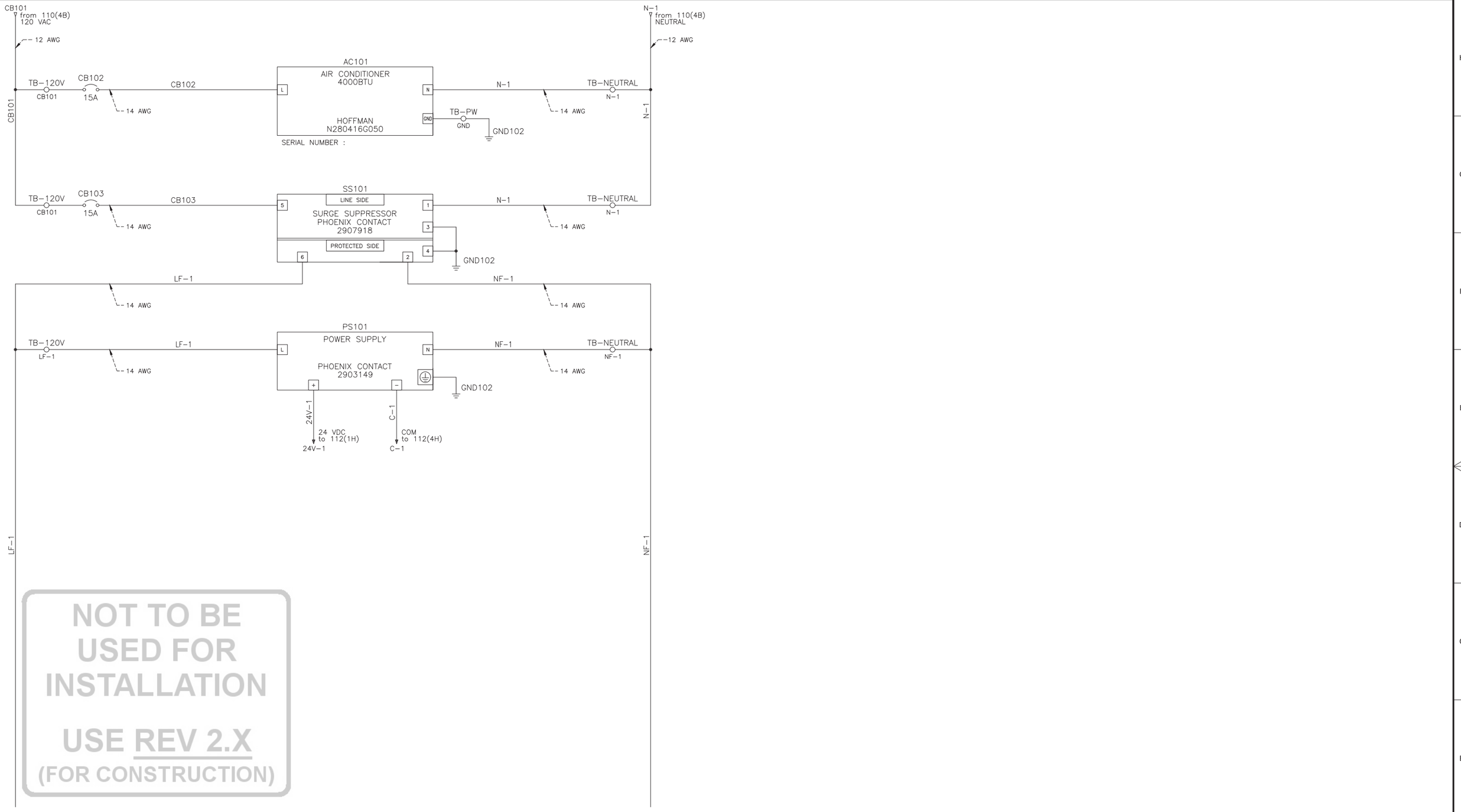

Notes générales / General notes

Rev.	Description	Date	Dessiné / Drawn
0.0	FOR APPROVAL	04/07/2023	D. MARTEL

CE DESSIN ET TOUTES LES INFORMATIONS QU'IL CONTIENT SONT LA PROPRIÉTÉ EXCLUSIVE DE LES INDUSTRIES FOURNIER INC. IL EST STRICTEMENT INTERDIT DE COMMUNIQUER OU UTILISER SON CONTENU À D'AUTRES FINS QUE CELLES PERMISES ORIGINALEMENT OU POUVANT ÊTRE PRÉJUDICIABLES AUX INTÉRÊTS DE LES INDUSTRIES FOURNIER INC. TOUTE REPRODUCTION DE CE DESSIN EST INTERDITE ET IL DOIT ÊTRE RETOURNÉ SUR DEMANDE.

THIS DRAWING AND ALL THE INFORMATION IT CONTAINS ARE THE EXCLUSIVE PROPERTY OF FOURNIER INDUSTRIES INC. IT IS STRICTLY FORBIDDEN TO COMMUNICATE OR USE THE INFORMATION FOR PURPOSES OTHER THAN THE ORIGINAL INTENDED ONES OR IF THE USE COULD BE HARMFUL TO THE INTERESTS OF FOURNIER INDUSTRIES INC.. THIS DRAWING IN WHOLE OR IN PART MAY NOT BE REPRODUCED IN ANY FASHION AND HAS TO BE RETURNED TO FOURNIER INDUSTRIES INC. UPON REQUEST.

LES INDUSTRIES FOURNIER INC.
FOURNIER INDUSTRIES INC.
3787 BOUL. FRONTENAC OUEST
THETFORD MINES, QUÉBEC, CANADA, G6H 2B5

Sceau / Stamp

Créer par / Created by	D. MARTEL
Vérifié / Checked	G. ARCAND
Approuvé / Approuved	M.-A. TURGEON
Date de création / Creation date	16/06/2023
Échelle / Scale	

WINNIPEG, MB

2 X ROTARY PRESS 3(4)-900/4000CVP

POWER PANEL
ELECTRICAL ARRANGEMENT – 120 VAC

No Projet / Project No.	No Dessin/ Drawing No.	Revision
2023-11911	D - 23-8460 - 111	0.0

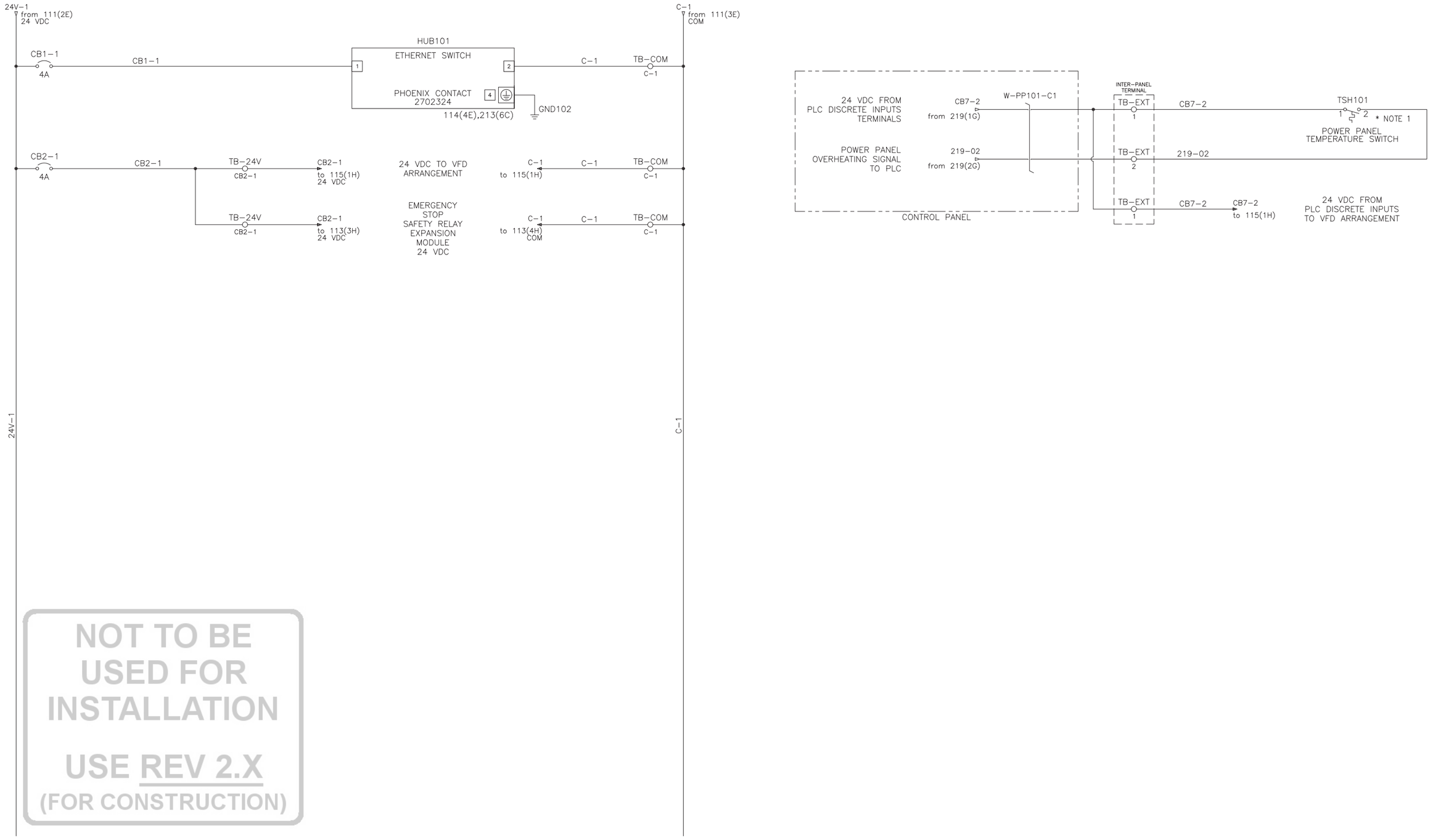

NOT TO BE USED FOR INSTALLATION

USE REV 2.X
(FOR CONSTRUCTION)

Notes générales / General notes

NOTE 1:

TEMPERATURE SWITCH (TSH101)
ADJUSTED AT 45°C/113°F

Rev.	Description	Date	Dessiné / Drawn
0.0	FOR APPROVAL	04/07/2023	D. MARTEL

CE DESSIN ET TOUTES LES INFORMATIONS QU'IL CONTIENT SONT LA PROPRIÉTÉ EXCLUSIVE DE LES INDUSTRIES FOURNIER INC. IL EST STRICTEMENT INTERDIT DE COMMUNIQUER OU UTILISER SON CONTENU À D'AUTRES FINS QUE CELLES PERMISES ORIGINALEMENT OU POUVANT ÊTRE PRÉJUDICIABLES AUX INTÉRÊTS DE LES INDUSTRIES FOURNIER INC. TOUTE REPRODUCTION DE CE DESSIN EST INTERDITE ET IL DOIT ÊTRE RETOURNÉ SUR DEMANDE.

THIS DRAWING AND ALL THE INFORMATION IT CONTAINS ARE THE EXCLUSIVE PROPERTY OF FOURNIER INDUSTRIES INC. IT IS STRICTLY FORBIDDEN TO COMMUNICATE OR USE THE INFORMATION FOR PURPOSES OTHER THAN THE ORIGINAL INTENDED ONES OR IF THE USE COULD BE HARMFUL TO THE INTERESTS OF FOURNIER INDUSTRIES INC. THIS DRAWING IN WHOLE OR IN PART MAY NOT BE REPRODUCED IN ANY FASHION AND HAS TO BE RETURNED TO FOURNIER INDUSTRIES INC. UPON REQUEST.

LES INDUSTRIES FOURNIER INC.
FOURNIER INDUSTRIES INC.
3787 BOUL. FRONTENAC OUEST
THETFORD MINES, QUÉBEC, CANADA, G6H 2B5

Sceau / Stamp

Créer par / Created by	D. MARTEL
Vérifié / Checked	G. ARCAND
Approuvé / Approuved	M.-A. TURGEON
Date de création / Creation date	16/06/2023
Échelle / Scale	

WINNIPEG, MB

2 X ROTARY PRESS 3(4)-900/4000CVP

POWER PANEL
ELECTRICAL ARRANGEMENT – 24 VDC

No Projet / Project No.	No Dessin/ Drawing No.	Revision
2023-11911	D - 23-8460 - 112	0.0

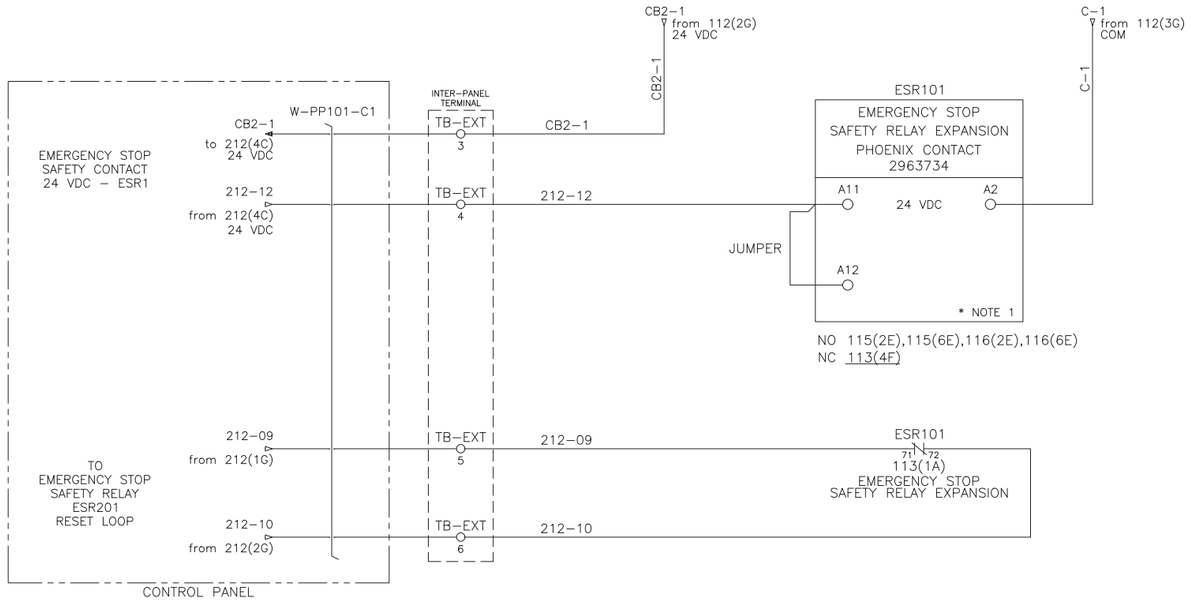

NOT TO BE USED FOR INSTALLATION

USE REV 2.X
(FOR CONSTRUCTION)

Notes générales / General notes

NOTE 1:

PHOENIX CONTACT
2963734

CONTACT RATING
250V AC/DC, 6A

Rev.	Description	Date	Dessiné / Drawn
0.0	FOR APPROVAL	04/07/2023	D. MARTEL

LES INDUSTRIES FOURNIER INC.
FOURNIER INDUSTRIES INC.
3787 BOUL. FRONTENAC OUEST
THETFORD MINES, QUÉBEC, CANADA, G6H 2B5

CE DESSIN ET TOUTES LES INFORMATIONS QU'IL CONTIENT SONT LA PROPRIÉTÉ EXCLUSIVE DE LES INDUSTRIES FOURNIER INC. IL EST STRICTEMENT INTERDIT DE COMMUNIQUER OU UTILISER SON CONTENU À D'AUTRES FINS QUE CELLES PERMISES ORIGINALEMENT OU POUVANT ÊTRE PRÉJUDICIABLES AUX INTÉRÊTS DE LES INDUSTRIES FOURNIER INC. TOUTE REPRODUCTION DE CE DESSIN EST INTERDITE ET IL DOIT ÊTRE RETOURNÉ SUR DEMANDE.

THIS DRAWING AND ALL THE INFORMATION IT CONTAINS ARE THE EXCLUSIVE PROPERTY OF FOURNIER INDUSTRIES INC. IT IS STRICTLY FORBIDDEN TO COMMUNICATE OR USE THE INFORMATION FOR PURPOSES OTHER THAN THE ORIGINAL INTENDED ONES OR IF THE USE COULD BE HARMFUL TO THE INTERESTS OF FOURNIER INDUSTRIES INC. THIS DRAWING IN WHOLE OR IN PART MAY NOT BE REPRODUCED IN ANY FASHION AND HAS TO BE RETURNED TO FOURNIER INDUSTRIES INC. UPON REQUEST.

Sceau / Stamp

Créer par / Created by: D. MARTEL
Vérifié / Checked: G. ARCAND
Approuvé / Approuved: M.-A. TURGEON
Date de création / Creation date: 16/06/2023
Échelle / Scale:

WINNIPEG, MB
2 X ROTARY PRESS 3(4)-900/4000CVP

POWER PANEL
SAFETY - EMERGENCY STOP

No Projet / Project No.	No Dessin/ Drawing No.	Revision
2023-11911	D - 23-8460 - 113	0.0

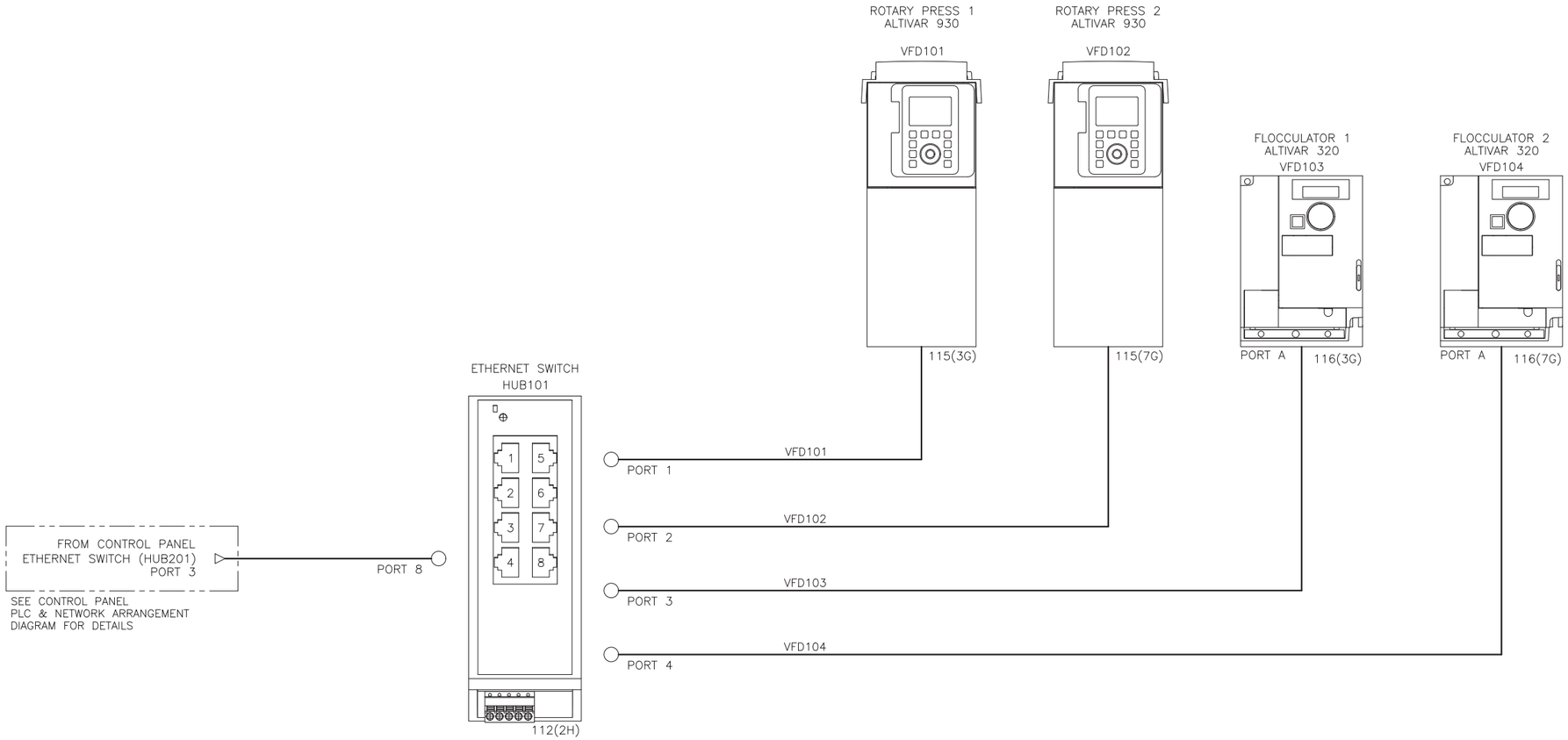

ETHERNET SWITCH (HUB101) – ADDRESSING

PORT	DESCRIPTION	IP ADDRESS
1	VFD – ROTARY PRESS 1	192.168.100.30
2	VFD – ROTARY PRESS 2	192.168.100.31
3	VFD – FLOCCULATOR 1	192.168.100.32
4	VFD – FLOCCULATOR 2	192.168.100.33
5	SPARE	–
6	SPARE	–
7	SPARE	–
8	ETHERNET SWITCH (HUB201)	192.168.100.1
	LOCAL ETHERNET SWITCH (HUB101)	192.168.100.2

NOT TO BE USED FOR INSTALLATION

USE REV 2.X
(FOR CONSTRUCTION)

Notes générales / General notes

Rev.	Description	Date	Dessiné / Drawn
0.0	FOR APPROVAL	04/07/2023	D. MARTEL

CE DESSIN ET TOUTES LES INFORMATIONS QU'IL CONTIENT SONT LA PROPRIÉTÉ EXCLUSIVE DE LES INDUSTRIES FOURNIER INC. IL EST STRICTEMENT INTERDIT DE COMMUNIQUER OU UTILISER SON CONTENU À D'AUTRES FINS QUE CELLES PERMISES ORIGINALEMENT OU POUVANT ÊTRE PRÉJUDICIABLES AUX INTÉRÊTS DE LES INDUSTRIES FOURNIER INC. TOUTE REPRODUCTION DE CE DESSIN EST INTERDITE ET IL DOIT ÊTRE RETOURNÉ SUR DEMANDE.

THIS DRAWING AND ALL THE INFORMATION IT CONTAINS ARE THE EXCLUSIVE PROPERTY OF FOURNIER INDUSTRIES INC. IT IS STRICTLY FORBIDDEN TO COMMUNICATE OR USE THE INFORMATION FOR PURPOSES OTHER THAN THE ORIGINAL INTENDED ONES OR IF THE USE COULD BE HARMFUL TO THE INTERESTS OF FOURNIER INDUSTRIES INC. THIS DRAWING IN WHOLE OR IN PART MAY NOT BE REPRODUCED IN ANY FASHION AND HAS TO BE RETURNED TO FOURNIER INDUSTRIES INC. UPON REQUEST.

LES INDUSTRIES FOURNIER INC.
FOURNIER INDUSTRIES INC.
3787 BOUL. FRONTENAC OUEST
THETFORD MINES, QUÉBEC, CANADA, G6H 2B5

Sceau / Stamp

Créer par / Created by: D. MARTEL
Vérifié / Checked: G. ARCAND
Approuvé / Approuved: M.–A. TURGEON
Date de création / Creation date: 16/06/2023
Échelle / Scale:

WINNIPEG, MB
2 X ROTARY PRESS 3(4)–900/4000CVP

POWER PANEL
NETWORK ARRANGEMENT

No Projet / Project No.	No Dessin/ Drawing No.	Revision
2023-11911	D - 23-8460 - 114	0.0

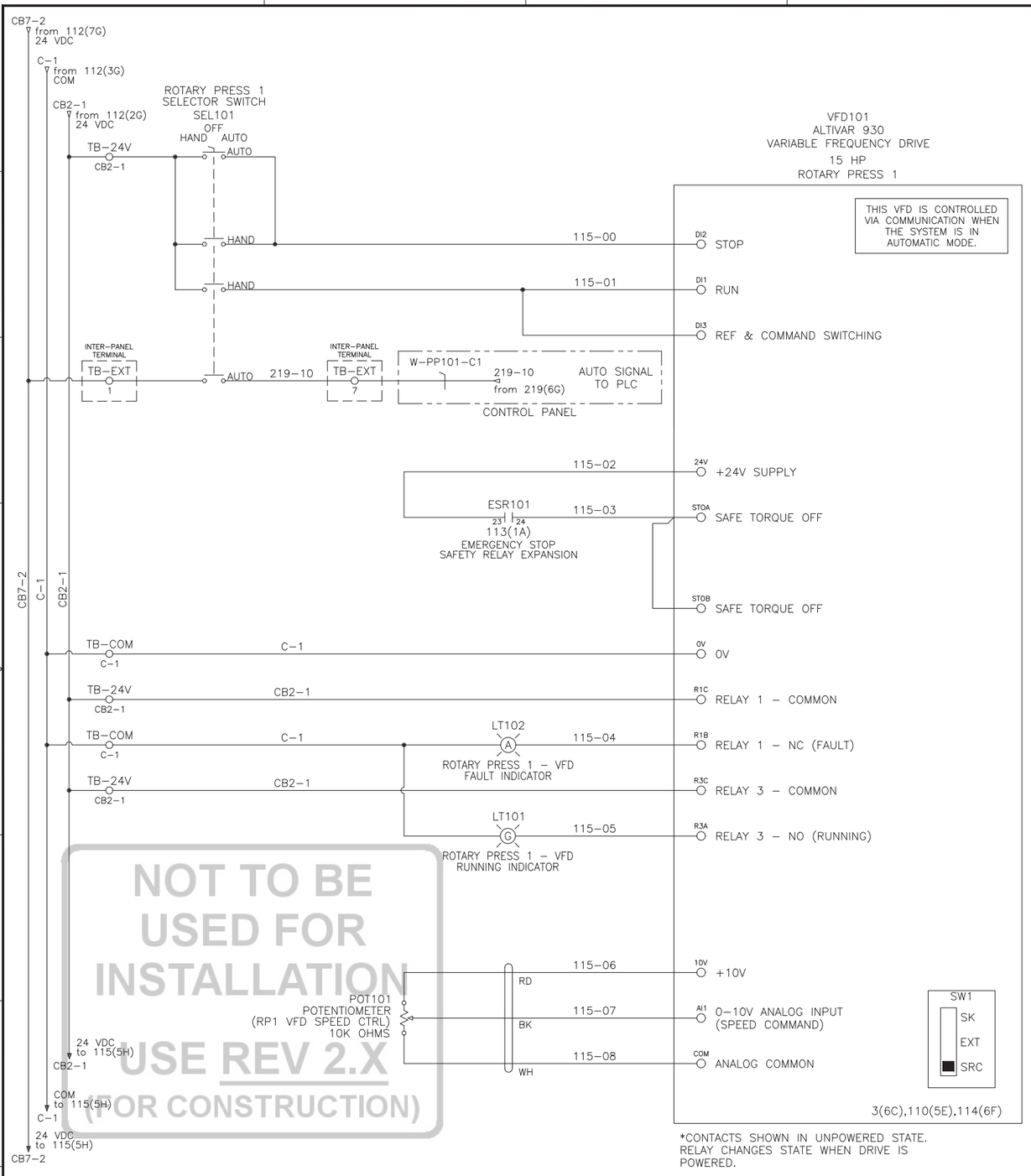

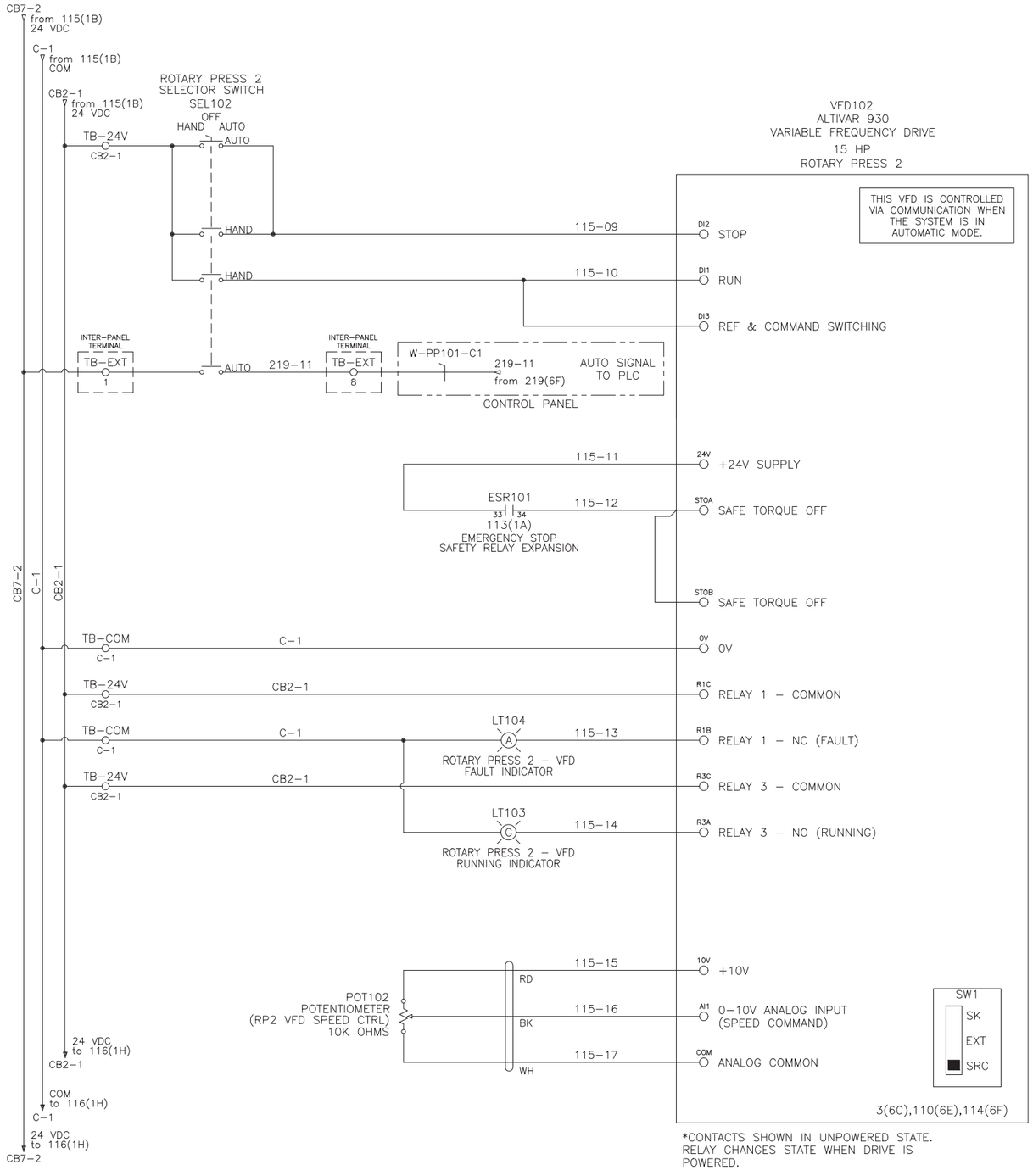

NOT TO BE USED FOR INSTALLATION
USE REV 2.X
(FOR CONSTRUCTION)

Notes générales / General notes

Rev.	Description	Date	Dessiné / Drawn
0.0	FOR APPROVAL	04/07/2023	D. MARTEL

LES INDUSTRIES FOURNIER INC.
FOURNIER INDUSTRIES INC.
3787 BOUL. FRONTENAC OUEST
THETFORD MINES, QUÉBEC, CANADA, G6H 2B5

CE DESSIN ET TOUTES LES INFORMATIONS QU'IL CONTIENT SONT LA PROPRIÉTÉ EXCLUSIVE DE LES INDUSTRIES FOURNIER INC. IL EST STRICTEMENT INTERDIT DE COMMUNIQUER OU UTILISER SON CONTENU À D'AUTRES FINS QUE CELLES PERMISES ORIGINALEMENT OU POUVANT ÊTRE PRÉJUDICIABLES AUX INTÉRÊTS DE LES INDUSTRIES FOURNIER INC. TOUTE REPRODUCTION DE CE DESSIN EST INTERDITE ET IL DOIT ÊTRE RETOURNÉ SUR DEMANDE.

THIS DRAWING AND ALL THE INFORMATION IT CONTAINS ARE THE EXCLUSIVE PROPERTY OF FOURNIER INDUSTRIES INC. IT IS STRICTLY FORBIDDEN TO COMMUNICATE OR USE THE INFORMATION FOR PURPOSES OTHER THAN THE ORIGINAL INTENDED ONES OR IF THE USE COULD BE HARMFUL TO THE INTERESTS OF FOURNIER INDUSTRIES INC. THIS DRAWING IN WHOLE OR IN PART MAY NOT BE REPRODUCED IN ANY FASHION AND HAS TO BE RETURNED TO FOURNIER INDUSTRIES INC. UPON REQUEST.

Sceau / Stamp

Créer par / Created by	D. MARTEL
Vérifié / Checked	G. ARCAND
Approuvé / Approuved	M.-A. TURGEON
Date de création / Creation date	16/06/2023
Échelle / Scale	

WINNIPEG, MB

2 X ROTARY PRESS 3(4)-900/4000CVP

POWER PANEL
VFD – ROTARY PRESS 1 & 2

No Projet / Project No.	No Dessin/ Drawing No.	Revision
2023-11911	D - 23-8460 - 115	0.0

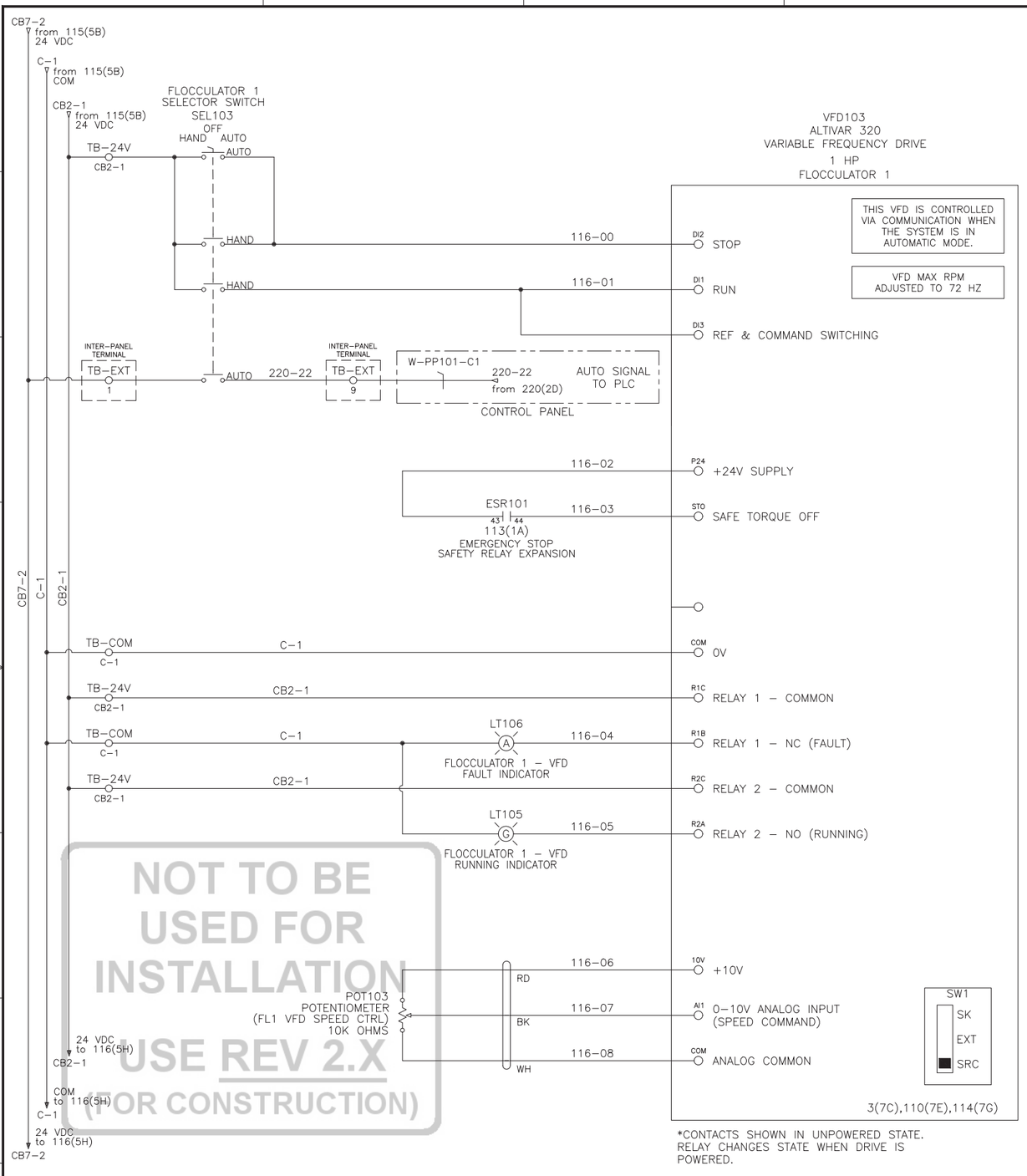

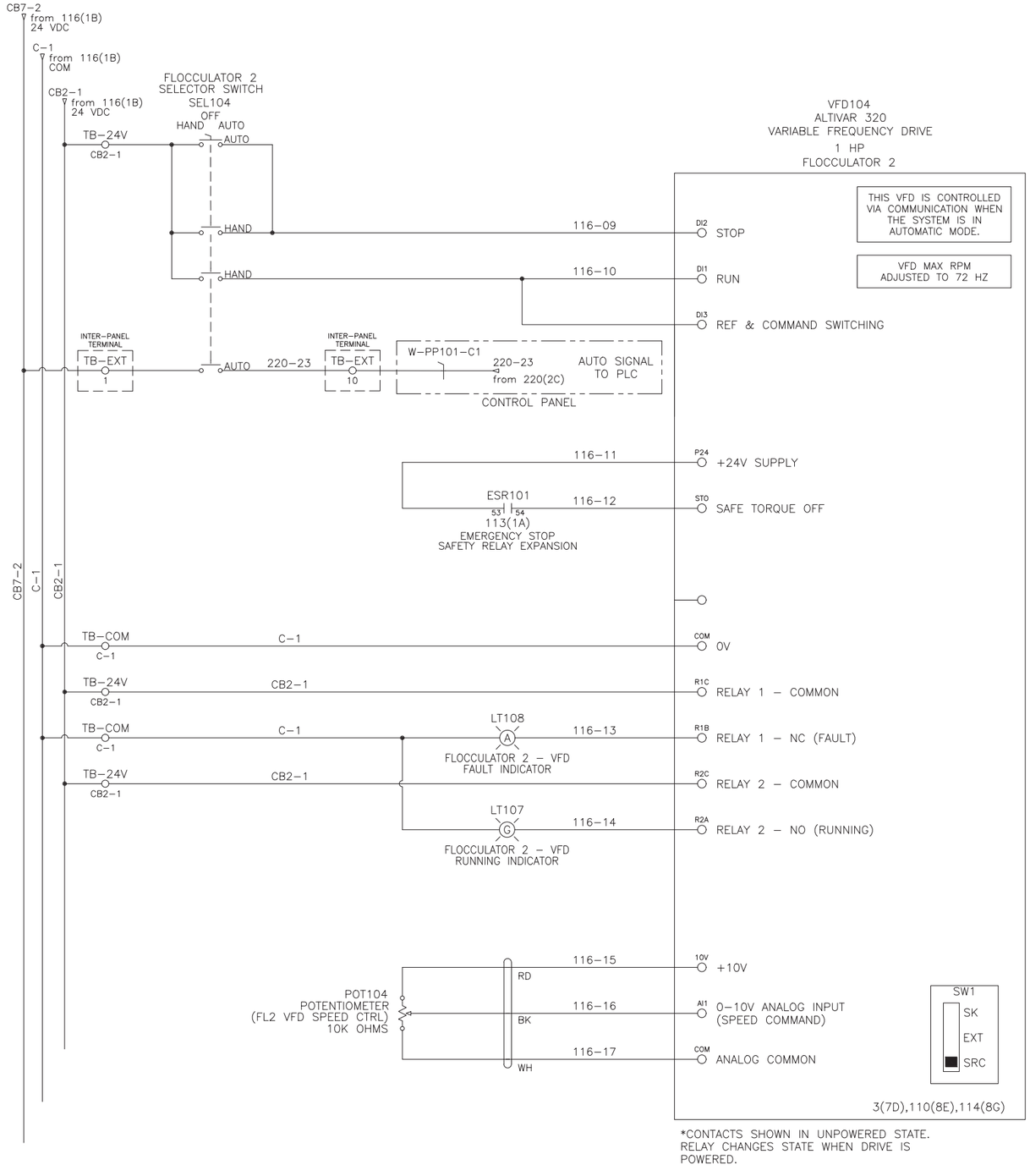

NOT TO BE USED FOR INSTALLATION
USE REV 2.X
(FOR CONSTRUCTION)

Notes générales / General notes

Rev.	Description	Date	Dessiné / Drawn
0.0	FOR APPROVAL	04/07/2023	D. MARTEL

CE DESSIN ET TOUTES LES INFORMATIONS QU'IL CONTIENT SONT LA PROPRIÉTÉ EXCLUSIVE DE LES INDUSTRIES FOURNIER INC. IL EST STRICTEMENT INTERDIT DE COMMUNIQUER OU UTILISER SON CONTENU À D'AUTRES FINS QUE CELLES PERMISES ORIGINALEMENT OU POUVANT ÉTRE PRÉJUDICIABLES AUX INTÉRETS DE LES INDUSTRIES FOURNIER INC. TOUTE REPRODUCTION DE CE DESSIN EST INTERDITE ET IL DOIT ÉTRE RETOURNÉ SUR DEMANDE.

THIS DRAWING AND ALL THE INFORMATION IT CONTAINS ARE THE EXCLUSIVE PROPERTY OF FOURNIER INDUSTRIES INC. IT IS STRICTLY FORBIDDEN TO COMMUNICATE OR USE THE INFORMATION FOR PURPOSES OTHER THAN THE ORIGINAL INTENDED ONES OR IF THE USE COULD BE HARMFUL TO THE INTERESTS OF FOURNIER INDUSTRIES INC. THIS DRAWING IN WHOLE OR IN PART MAY NOT BE REPRODUCED IN ANY FASHION AND HAS TO BE RETURNED TO FOURNIER INDUSTRIES INC. UPON REQUEST.

LES INDUSTRIES FOURNIER INC.
FOURNIER INDUSTRIES INC.
3787 BOUL. FRONTENAC OUEST
THETFORD MINES, QUÉBEC, CANADA, G6H 2B5

Sceau / Stamp

Créer par / Created by	D. MARTEL
Vérifié / Checked	G. ARCAND
Approuvé / Approuved	M.-A. TURGEON
Date de création / Creation date	16/06/2023
Échelle / Scale	

WINNIPEG, MB
2 X ROTARY PRESS 3(4)-900/4000CVP

POWER PANEL
VFD - FLOCCULATOR 1 & 2

No Projet / Project No.	No Dessin/ Drawing No.	Revision
2023-11911	D - 23-8460 - 116	0.0

FRONT VIEW

PC201

60"(H) x 36"(W) x 12"(D)
(1524 x 914 x 305 mm)

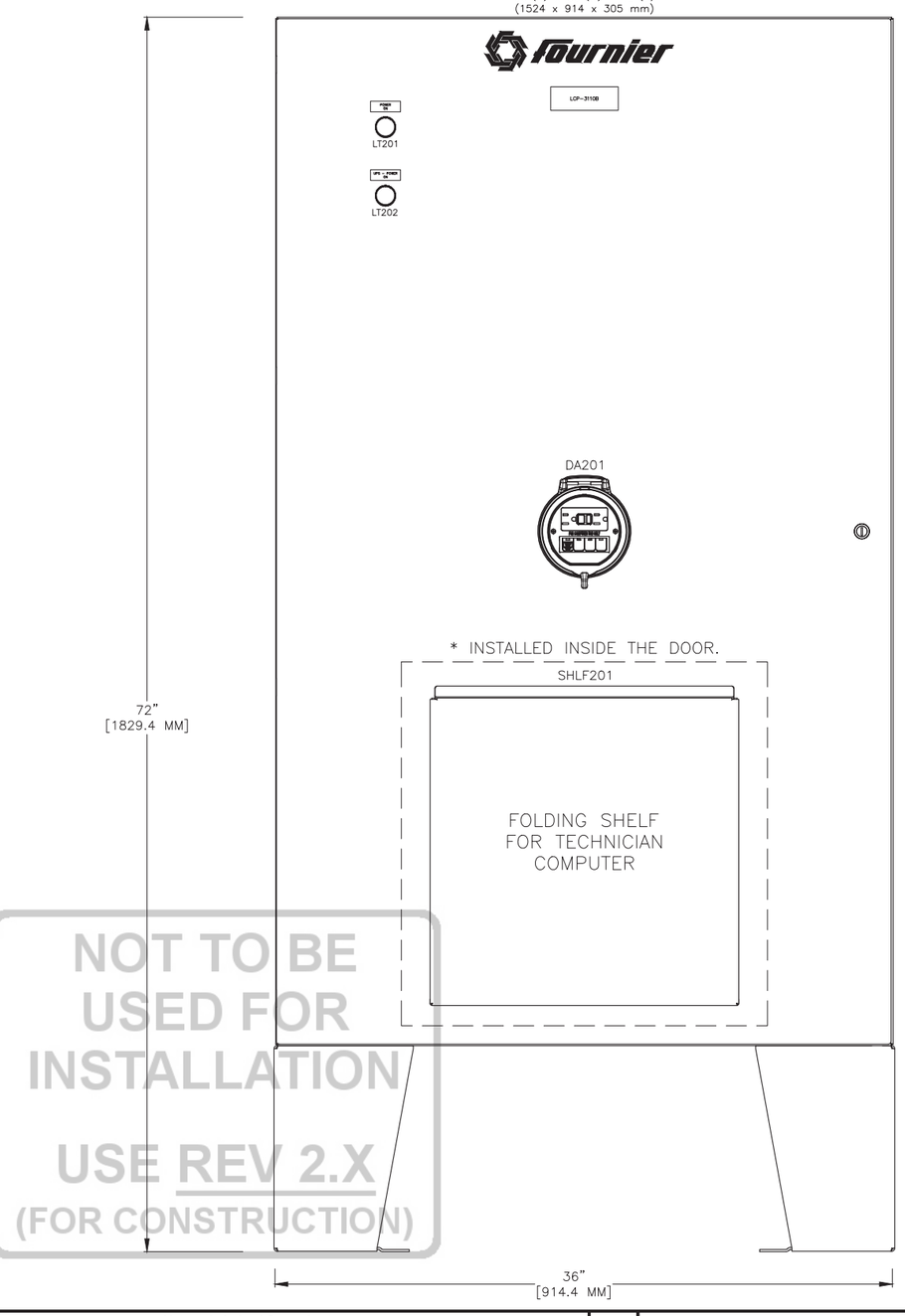

NOT TO BE USED FOR INSTALLATION

USE REV 2.X
(FOR CONSTRUCTION)

BACKPLATE

BP201

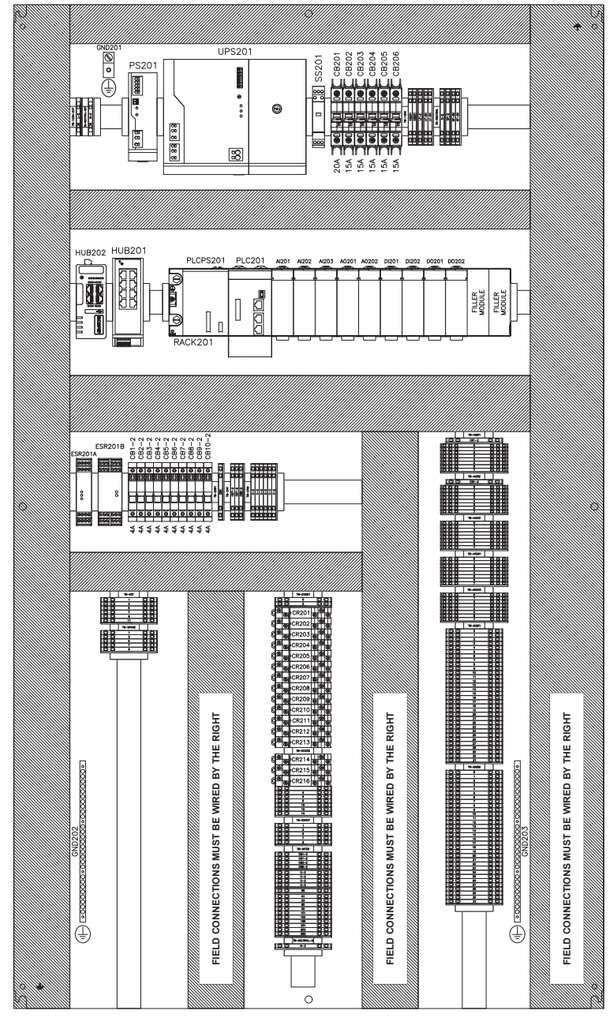

Notes générales / General notes

* IMPORTANT
FINAL DESIGN WILL BE ON
"FOR CONSTRUCTION" REVISION

Rev.	Description	Date	Dessiné / Drawn
0.0	FOR APPROVAL	04/07/2023	D. MARTEL

LES INDUSTRIES FOURNIER INC.
FOURNIER INDUSTRIES INC.
3787 BOUL. FRONTENAC OUEST
THETFORD MINES, QUÉBEC, CANADA, G6H 2B5

CE DESSIN ET TOUTES LES INFORMATIONS QU'IL CONTIENT SONT LA PROPRIÉTÉ EXCLUSIVE DE LES INDUSTRIES FOURNIER INC. IL EST STRICTEMENT INTERDIT DE COMMUNIQUER OU UTILISER SON CONTENU À D'AUTRES FINS QUE CELLES PERMISES ORIGINALEMENT OU POUVANT ÊTRE PRÉJUDICIABLES AUX INTÉRÊTS DE LES INDUSTRIES FOURNIER INC. TOUTE REPRODUCTION DE CE DESSIN EST INTERDITE ET IL DOIT ÊTRE RETOURNÉ SUR DEMANDE.

THIS DRAWING AND ALL THE INFORMATION IT CONTAINS ARE THE EXCLUSIVE PROPERTY OF FOURNIER INDUSTRIES INC. IT IS STRICTLY FORBIDDEN TO COMMUNICATE OR USE THE INFORMATION FOR PURPOSES OTHER THAN THE ORIGINAL INTENDED ONES OR IF THE USE COULD BE HARMFUL TO THE INTERESTS OF FOURNIER INDUSTRIES INC. THIS DRAWING IN WHOLE OR IN PART MAY NOT BE REPRODUCED IN ANY FASHION AND HAS TO BE RETURNED TO FOURNIER INDUSTRIES INC. UPON REQUEST.

Sceau / Stamp

Créer par / Created by	D. MARTEL
Vérifié / Checked	G. ARCAND
Approuvé / Approuved	M.-A. TURGEON
Date de création / Creation date	16/06/2023
Échelle / Scale	

WINNIPEG, MB

2 X ROTARY PRESS 3(4)-900/4000CVP

CONTROL PANEL
GENERAL ARRANGEMENT

No Projet / Project No.	No Dessin/ Drawing No.	Revision
2023-11911	D - 23-8460 - 200	0.0

TAG	QTY	DESCRIPTION	CAT. NO.	CAT. NO. (FOURNIER)	MANUFACTURER
AI201	1	MODICON X80, ANALOG INPUT MODULE, 8-CH ISOLATED	BMX AMI 0810		SCHNEIDER ELECTRIC
AI202	1	MODICON X80, ANALOG INPUT MODULE, 8-CH ISOLATED	BMX AMI 0810		SCHNEIDER ELECTRIC
AI203	1	MODICON X80, ANALOG INPUT MODULE, 8-CH ISOLATED	BMX AMI 0810		SCHNEIDER ELECTRIC
AO201	1	MODICON X80, ANALOG OUTPUT MODULE, 8-CH	BMX AMO 0802		SCHNEIDER ELECTRIC
AO202	1	MODICON X80, ANALOG OUTPUT MODULE, 8-CH	BMX AMO 0802		SCHNEIDER ELECTRIC
BP201	1	GALVANIZED BACK PLATE 60" X 36"	CP6036G	HOF-CP6036G	HOFFMAN
CB1-2	1	UT 6-TMC M, THERMOMAGNETIC BREAKER, 1P, 4A, MAX 240VAC, MAX 24VDC	0916606	PHO-0916606	PHOENIX CONTACT
CB10-2	1	UT 6-TMC M, THERMOMAGNETIC BREAKER, 1P, 4A, MAX 240VAC, MAX 24VDC	0916606	PHO-0916606	PHOENIX CONTACT
CB2-2	1	UT 6-TMC M, THERMOMAGNETIC BREAKER, 1P, 4A, MAX 240VAC, MAX 24VDC	0916606	PHO-0916606	PHOENIX CONTACT
CB201	1	CIRCUIT BREAKER, 1 POLE, 20A, 277VAC, 48VDC, UL489/CSA 22.2, CURVE C	1489-M1C200		AB
CB202	1	CIRCUIT BREAKER, 1 POLE, 15A, 277VAC, 48VDC, UL489/CSA 22.2, CURVE C	1489-M1C150	ALL-1489-M1C150	AB
CB203	1	CIRCUIT BREAKER, 1 POLE, 15A, 277VAC, 48VDC, UL489/CSA 22.2, CURVE C	1489-M1C150	ALL-1489-M1C150	AB
CB204	1	CIRCUIT BREAKER, 1 POLE, 15A, 277VAC, 48VDC, UL489/CSA 22.2, CURVE C	1489-M1C150	ALL-1489-M1C150	AB
CB205	1	CIRCUIT BREAKER, 1 POLE, 15A, 277VAC, 48VDC, UL489/CSA 22.2, CURVE C	1489-M1C150	ALL-1489-M1C150	AB
CB206	1	CIRCUIT BREAKER, 1 POLE, 15A, 277VAC, 48VDC, UL489/CSA 22.2, CURVE C	1489-M1C150	ALL-1489-M1C150	AB
CB3-2	1	UT 6-TMC M, THERMOMAGNETIC BREAKER, 1P, 4A, MAX 240VAC, MAX 24VDC	0916606	PHO-0916606	PHOENIX CONTACT
CB4-2	1	UT 6-TMC M, THERMOMAGNETIC BREAKER, 1P, 4A, MAX 240VAC, MAX 24VDC	0916606	PHO-0916606	PHOENIX CONTACT
CB5-2	1	UT 6-TMC M, THERMOMAGNETIC BREAKER, 1P, 4A, MAX 240VAC, MAX 24VDC	0916606	PHO-0916606	PHOENIX CONTACT
CB6-2	1	UT 6-TMC M, THERMOMAGNETIC BREAKER, 1P, 4A, MAX 240VAC, MAX 24VDC	0916606	PHO-0916606	PHOENIX CONTACT
CB7-2	1	UT 6-TMC M, THERMOMAGNETIC BREAKER, 1P, 4A, MAX 240VAC, MAX 24VDC	0916606	PHO-0916606	PHOENIX CONTACT
CB8-2	1	UT 6-TMC M, THERMOMAGNETIC BREAKER, 1P, 4A, MAX 240VAC, MAX 24VDC	0916606	PHO-0916606	PHOENIX CONTACT
CB9-2	1	UT 6-TMC M, THERMOMAGNETIC BREAKER, 1P, 4A, MAX 240VAC, MAX 24VDC	0916606	PHO-0916606	PHOENIX CONTACT
CBL-2020	1	PRE-ASSEMBLY CABLE, ONE 28 WAY WITH CONNECTOR, ONE END FLYING LEADS, SHIELDED, 3M	BMX FTW 308S		SCHNEIDER ELECTRIC
CBL-2030	1	PRE-ASSEMBLY CABLE, ONE 28 WAY WITH CONNECTOR, ONE END FLYING LEADS, SHIELDED, 3M	BMX FTW 308S		SCHNEIDER ELECTRIC
CBL-2040	1	PRE-ASSEMBLY CABLE, ONE 28 WAY WITH CONNECTOR, ONE END FLYING LEADS, SHIELDED, 3M	BMX FTW 308S		SCHNEIDER ELECTRIC
CBL-2050	1	PRE-ASSEMBLY CABLE, ONE 20 WAY WITH CONNECTOR, ONE END FLYING LEADS, SHIELDED, 3M	BMX FTW 301S		SCHNEIDER ELECTRIC
CBL-2060	1	PRE-ASSEMBLY CABLE, ONE 20 WAY WITH CONNECTOR, ONE END FLYING LEADS, SHIELDED, 3M	BMX FTW 301S		SCHNEIDER ELECTRIC
CBL-2070	1	PRE-ASSEMBLY CABLE, ONE 40-WAY CONNECTOR, ONE END FLYING LEADS, 3M	BMX FCW 301		SCHNEIDER ELECTRIC
CBL-2080	1	PRE-ASSEMBLY CABLE, ONE 40-WAY CONNECTOR, ONE END FLYING LEADS, 3M	BMX FCW 301		SCHNEIDER ELECTRIC
CBL-2090	1	PRE-ASSEMBLY CABLE, ONE 20 WAY WITH CONNECTOR, ONE END FLYING LEADS, 3M	BMX FTW 301		SCHNEIDER ELECTRIC
CBL-2100	1	PRE-ASSEMBLY CABLE, ONE 20 WAY WITH CONNECTOR, ONE END FLYING LEADS, 3M	BMX FTW 301		SCHNEIDER ELECTRIC
CR201	1	HK TYPE SLIM LINE RELAY, 16A, 1 POLE, 24 VDC, WITH SOCKET 700-HN221	700-HK36Z24	ALL-700HK36Z24KE	AB
	1	SCREW TERMINAL MINIATURE SOCKET	700-HN221	ALL-700HN221KE	AB
CR202	1	HK TYPE SLIM LINE RELAY, 16A, 1 POLE, 24 VDC, WITH SOCKET 700-HN221	700-HK36Z24	ALL-700HK36Z24KE	AB
	1	SCREW TERMINAL MINIATURE SOCKET	700-HN221	ALL-700HN221KE	AB
CR203	1	HK TYPE SLIM LINE RELAY, 16A, 1 POLE, 24 VDC, WITH SOCKET 700-HN221	700-HK36Z24	ALL-700HK36Z24KE	AB
	1	SCREW TERMINAL MINIATURE SOCKET	700-HN221	ALL-700HN221KE	AB
CR204	1	HK TYPE SLIM LINE RELAY, 16A, 1 POLE, 24 VDC, WITH SOCKET 700-HN221	700-HK36Z24	ALL-700HK36Z24KE	AB
	1	SCREW TERMINAL MINIATURE SOCKET	700-HN221	ALL-700HN221KE	AB
CR205	1	HK TYPE SLIM LINE RELAY, 16A, 1 POLE, 24 VDC, WITH SOCKET 700-HN221	700-HK36Z24	ALL-700HK36Z24KE	AB
	1	SCREW TERMINAL MINIATURE SOCKET	700-HN221	ALL-700HN221KE	AB
CR206	1	HK TYPE SLIM LINE RELAY, 16A, 1 POLE, 24 VDC, WITH SOCKET 700-HN221	700-HK36Z24	ALL-700HK36Z24KE	AB
	1	SCREW TERMINAL MINIATURE SOCKET	700-HN221	ALL-700HN221KE	AB
CR207	1	HK TYPE SLIM LINE RELAY, 16A, 1 POLE, 24 VDC, WITH SOCKET 700-HN221	700-HK36Z24	ALL-700HK36Z24KE	AB
	1	SCREW TERMINAL MINIATURE SOCKET	700-HN221	ALL-700HN221KE	AB
CR208	1	HK TYPE SLIM LINE RELAY, 16A, 1 POLE, 24 VDC, WITH SOCKET 700-HN221	700-HK36Z24	ALL-700HK36Z24KE	AB
	1	SCREW TERMINAL MINIATURE SOCKET	700-HN221	ALL-700HN221KE	AB
CR209	1	HK TYPE SLIM LINE RELAY, 16A, 1 POLE, 24 VDC, WITH SOCKET 700-HN221	700-HK36Z24	ALL-700HK36Z24KE	AB
	1	SCREW TERMINAL MINIATURE SOCKET	700-HN221	ALL-700HN221KE	AB
CR210	1	HK TYPE SLIM LINE RELAY, 16A, 1 POLE, 24 VDC, WITH SOCKET 700-HN221	700-HK36Z24	ALL-700HK36Z24KE	AB
	1	SCREW TERMINAL MINIATURE SOCKET	700-HN221	ALL-700HN221KE	AB
CR211	1	HK TYPE SLIM LINE RELAY, 16A, 1 POLE, 24 VDC, WITH SOCKET 700-HN221	700-HK36Z24	ALL-700HK36Z24KE	AB
	1	SCREW TERMINAL MINIATURE SOCKET	700-HN221	ALL-700HN221KE	AB
CR212	1	HK TYPE SLIM LINE RELAY, 16A, 1 POLE, 24 VDC, WITH SOCKET 700-HN221	700-HK36Z24	ALL-700HK36Z24KE	AB
	1	SCREW TERMINAL MINIATURE SOCKET	700-HN221	ALL-700HN221KE	AB

TAG	QTY	DESCRIPTION	CAT. NO.	CAT. NO. (FOURNIER)	MANUFACTURER
CR213	1	HK TYPE SLIM LINE RELAY, 16A, 1 POLE, 24 VDC, WITH SOCKET 700-HN221	700-HK36Z24	ALL-700HK36Z24KE	AB
	1	SCREW TERMINAL MINIATURE SOCKET	700-HN221	ALL-700HN221KE	AB
CR214	1	HK TYPE SLIM LINE RELAY, 16A, 1 POLE, 24 VDC, WITH SOCKET 700-HN221	700-HK36Z24	ALL-700HK36Z24KE	AB
	1	SCREW TERMINAL MINIATURE SOCKET	700-HN221	ALL-700HN221KE	AB
CR215	1	HK TYPE SLIM LINE RELAY, 16A, 1 POLE, 24 VDC, WITH SOCKET 700-HN221	700-HK36Z24	ALL-700HK36Z24KE	AB
	1	SCREW TERMINAL MINIATURE SOCKET	700-HN221	ALL-700HN221KE	AB
CR216	1	HK TYPE SLIM LINE RELAY, 16A, 1 POLE, 24 VDC, WITH SOCKET 700-HN221	700-HK36Z24	ALL-700HK36Z24KE	AB
	1	SCREW TERMINAL MINIATURE SOCKET	700-HN221	ALL-700HN221KE	AB
DA201	1	DATA ACCESS PORT, ELECTRICAL GFCI DUPLEX OUTLET 15A, 120VAC, RJ45 TO RJ45 MODULE, NEMA 4X	DAP4BC-G0-6	PAN-DAP4BC-G0-6	PANDUIT
DI201	1	MODICON X80, DISCRETE INPUT MODULE, 32-PT, 24 VDC INSULATED INPUTS	BMX DDI 3202K		SCHNEIDER ELECTRIC
DI202	1	MODICON X80, DISCRETE INPUT MODULE, 32-PT, 24 VDC INSULATED INPUTS	BMX DDI 3202K		SCHNEIDER ELECTRIC
DO201	1	MODICON X80, DISCRETE OUTPUT MODULE, 16 ISOLATED OUTPUTS	BMX DDO 1602		SCHNEIDER ELECTRIC
DO202	1	MODICON X80, DISCRETE OUTPUT MODULE, 16 ISOLATED OUTPUTS	BMX DDO 1602		SCHNEIDER ELECTRIC
EB201	12	END BRACKET, CLIPFIX 35, GREY	3022218	PHO-3022218KE	PHOENIX CONTACT
ESR201A	1	MONITORING SAFETY RELAY, 3 SPST-NO, 1 SPST-NC, 24 VDC	2981059	PHO-2981059	PHOENIX CONTACT
ESR201B	1	SAFETY RELAY EXPANSION MODULE, 5 SPST-NO, 1 SPST-NC, 24 VDC	2963734	PHO-2963734	PHOENIX CONTACT
GND201	1	TERMINAL, ALUMINIUM, 2AWG, 1/4	LAMA2-14-QY	PAN-LAMA2-14QYKE	PANDUIT
GND202	1	TERMINAL ALUMINIUM #6-2/0 CU/AL, 9.25", 27 SCREW CONNECTIONS, 1/4	PK27GTA	SCH-PK27GTAKE	SCHNEIDER ELECTRIC
GND203	1	TERMINAL ALUMINIUM #6-2/0 CU/AL, 9.25", 27 SCREW CONNECTIONS, 1/4	PK27GTA	SCH-PK27GTAKE	SCHNEIDER ELECTRIC
HUB201	1	INDUSTRIAL ETHERNET SWITCH, MANAGED, 8 PORTS, 10/100 MBPS, 24 VDC	2702324	PHO-2702324	PHOENIX CONTACT
HUB202	1	INDUSTRIAL LAN ROUTER MODEL EWON COSY+, 4 PORTS, 24 VDC	EC71330	EWO-EC71330	EWON
LT201	1	PLASTIC PILOT LIGHT, 22.5MM, FLUSH, CLEAR, IP66	800FP-P7		AB
	1	METAL LATCH FOR 800F OPERATOR	800F-ALM	ALL-800FALMKE	AB
	1	INTEGRATED LED - WHITE, 120 VAC	800F-N5W	ALL-800F-N5W	AB
LT202	1	PLASTIC PILOT LIGHT, 22.5MM, FLUSH, CLEAR, IP66	800FP-P7		AB
	1	METAL LATCH FOR 800F OPERATOR	800F-ALM	ALL-800FALMKE	AB
	1	INTEGRATED LED - WHITE, 120 VAC	800F-N5W	ALL-800F-N5W	AB
PC201	1	CONCEPT WALL-MOUNT ENCLOSURE (60" X 36" X 12"), NEMA 4, 12, 13, IP66	CSD603612		HOFFMAN
	1	CORROSION INHIBITOR, EMITTER FOR 10 CUBIC FOOT (12 PER PACKAGE)	AHCI10E	HOF-AHCI10EKE	HOFFMAN
	1	CORROSION INHIBITOR, EMITTER FOR 5 CUBIC FOOT (25 PER PACKAGE)	AHCI5E	HOF-AHCI5EKE	HOFFMAN
	1	DATA POCKET 12" X 12"	ADP2		HOFFMAN
	1	FLOOR STAND KIT, STEEL, 12" X 12", NEMA 4, 12	AFK1212		HOFFMAN
	2	PARFLEX, PNEUMATIC TUBING, POLYETHYLENE, 120 PSI MAX, 1/4" OUT DIAMETER, BLUE, 100' REEL	E-43-B-0100	PAR-E-43-0100KP	PARKER
PLC201	1	M580 PROCESSOR MODULE, MODBUS/ETHERNET, 8MB MEMORY	BME P58 2020		SCHNEIDER ELECTRIC
PLCPS201	1	MODICON X80, POWER SUPPLY MODULE, 85-264 VAC, 36W	BMX CPS 3500		SCHNEIDER ELECTRIC
PS201	1	TRIO POWER SUPPLY, 24...28 VDC, 100...240 VAC INPUT VOLTAGE, 240W, 10A	2903149	PHO-PS24V10A	PHOENIX CONTACT
RACK201	1	MODICON X80, RACK, 12 MODULE SLOTS	BMX XBP 1200		SCHNEIDER ELECTRIC
	2	MODICON X80, FILLER MODULE COVER	BMX XEM 010		SCHNEIDER ELECTRIC
SHLF201	1	FOLDING SHELF, 18" X 18"	AASHLF1818		HOFFMAN
SS201	1	SURGE SUPPRESSOR 120V 26A, FOR 3-CONDUCTOR SYSTEM (L1, N, PE), SCREW	2907918	PHO-2907918	PHOENIX CONTACT
TB-120V	1	GROUP MARKER FOR END BRACKET CLIPFIX 35, HEIGHT-ADJUSTABLE, GRAY	0811969	PHO-0811969KE	PHOENIX CONTACT
	5	PTTB4, PUSH-IN TERMINAL, 2 LEVELS, 28A, GREY, 10-24 AWG	3211786	PHO-3211786KE	PHOENIX CONTACT
	3	PTTB4 PARTITION PLATE, GREY, (D-STTB4)	3030462	PHO-3030462KE	PHOENIX CONTACT
TB-120V-EXT	1	GROUP MARKER FOR END BRACKET CLIPFIX 35, HEIGHT-ADJUSTABLE, GRAY	0811969	PHO-0811969KE	PHOENIX CONTACT
	1	PT4, PUSH-IN TERMINAL, 1 LEVEL, 32A, GREY, 10-24 AWG	3211757	PHO-3211757KE	PHOENIX CONTACT
	1	PT4 PARTITION PLATE, GREY, (D-ST4)	3030420	PHO-3030420KE	PHOENIX CONTACT
TB-24V	1	GROUP MARKER FOR END BRACKET CLIPFIX 35, HEIGHT-ADJUSTABLE, GRAY	0811969	PHO-0811969KE	PHOENIX CONTACT
	3	PTTB4, PUSH-IN TERMINAL, 2 LEVELS, 28A, GREY, 10-24 AWG	3211786	PHO-3211786KE	PHOENIX CONTACT
	1	PTTB4 PARTITION PLATE, GREY, (D-STTB4)	3030462	PHO-3030462KE	PHOENIX CONTACT
TB-AI201	1	GROUP MARKER FOR END BRACKET CLIPFIX 35, HEIGHT-ADJUSTABLE, GRAY	0811969	PHO-0811969KE	PHOENIX CONTACT
	1	PTTB4, PUSH-IN TERMINAL, 2 LEVELS, 28A, GREY, 10-24 AWG	3211786	PHO-3211786KE	PHOENIX CONTACT
	1	PTTB4 PARTITION PLATE, GREY, (D-STTB4)	3030462	PHO-3030462KE	PHOENIX CONTACT
	8	PT 2,5-3L, SPRING CAGE TERMINAL, 3 LEVELS, 20A, 12-26 AWG, GREY	3210499	PHO-3210499KE	PHOENIX CONTACT
	1	PT 2.5-3L, PARTITION PLATE, 3 LEVELS, GREY	3211647	PHO-3211647KE	PHOENIX CONTACT
TB-AI202	1	PTTB4, PUSH-IN TERMINAL, 2 LEVELS, 28A, GREY, 10-24 AWG	3211786	PHO-3211786KE	PHOENIX CONTACT

NOT FOR CONSTRUCTION INSPECTION
USE REV 2.X
(FOR CONSTRUCTION)

Notes générales / General notes

Rev.	Description	Date	Dessiné / Drawn
0.0	FOR APPROVAL	04/07/2023	D. MARTEL

LES INDUSTRIES FOURNIER INC.
FOURNIER INDUSTRIES INC.
3787 BOUL. FRONTENAC OUEST
THETFORD MINES, QUÉBEC, CANADA, G6H 2B5

CE DESSIN ET TOUTES LES INFORMATIONS QU'IL CONTIENT SONT LA PROPRIÉTÉ EXCLUSIVE DE LES INDUSTRIES FOURNIER INC. IL EST STRICTEMENT INTERDIT DE COMMUNIQUER OU UTILISER SON CONTENU À D'AUTRES FINS QUE CELLES PERMISES ORIGINALEMENT OU POUVANT ÊTRE PRÉJUDICIABLES AUX INTÉRÊTS DE LES INDUSTRIES FOURNIER INC. TOUTE REPRODUCTION DE CE DESSIN EST INTERDITE ET IL DOIT ÊTRE RETOURNÉ SUR DEMANDE.

THIS DRAWING AND ALL THE INFORMATION IT CONTAINS ARE THE EXCLUSIVE PROPERTY OF FOURNIER INDUSTRIES INC. IT IS STRICTLY FORBIDDEN TO COMMUNICATE OR USE THE INFORMATION FOR PURPOSES OTHER THAN THE ORIGINAL INTENDED ONES OR IF THE USE COULD BE HARMFUL TO THE INTERESTS OF FOURNIER INDUSTRIES INC. THIS DRAWING IN WHOLE OR IN PART MAY NOT BE REPRODUCED IN ANY FASHION AND HAS TO BE RETURNED TO FOURNIER INDUSTRIES INC. UPON REQUEST.

Sceau / Stamp

Créer par / Created by	D. MARTEL
Vérifié / Checked	G. ARCAND
Approuvé / Approuved	M.-A. TURGEON
Date de création / Creation date	16/06/2023
Échelle / Scale	

WINNIPEG, MB

2 X ROTARY PRESS 3(4)-900/4000CVP

CONTROL PANEL
LIST OF MATERIAL - (1 OF 2)

No Projet / Project No.	No Dessin/ Drawing No.	Revision
2023-11911	D - 23-8460 - 201	0.0

TAG	QTY	DESCRIPTION	CAT. NO.	CAT. NO. (FOURNIER)	MANUFACTURER
	1	PTTB4 PARTITION PLATE, GREY, (D-STTB4)	3030462	PHO-3030462KE	PHOENIX CONTACT
	8	PT 2,5-3L, SPRING CAGE TERMINAL, 3 LEVELS, 20A, 12-26 AWG, GREY	3210499	PHO-3210499KE	PHOENIX CONTACT
	1	PT 2.5-3L, PARTITION PLATE, 3 LEVELS, GREY	3211647	PHO-3211647KE	PHOENIX CONTACT
	1	GROUP MARKER FOR END BRACKET CLIPFIX 35, LONG, HEIGHT-ADJUSTABLE, GRAY	0814788	PHO-0814788KE	PHOENIX CONTACT
TB-AI203	8	PT 2,5-3L, SPRING CAGE TERMINAL, 3 LEVELS, 20A, 12-26 AWG, GREY	3210499	PHO-3210499KE	PHOENIX CONTACT
	1	PT 2.5-3L, PARTITION PLATE, 3 LEVELS, GREY	3211647	PHO-3211647KE	PHOENIX CONTACT
	1	GROUP MARKER FOR END BRACKET CLIPFIX 35, LONG, HEIGHT-ADJUSTABLE, GRAY	0814788	PHO-0814788KE	PHOENIX CONTACT
TB-AO201	8	PT 2,5-3L, SPRING CAGE TERMINAL, 3 LEVELS, 20A, 12-26 AWG, GREY	3210499	PHO-3210499KE	PHOENIX CONTACT
	1	PT 2.5-3L, PARTITION PLATE, 3 LEVELS, GREY	3211647	PHO-3211647KE	PHOENIX CONTACT
	1	GROUP MARKER FOR END BRACKET CLIPFIX 35, LONG, HEIGHT-ADJUSTABLE, GRAY	0814788	PHO-0814788KE	PHOENIX CONTACT
TB-AO202	8	PT 2,5-3L, SPRING CAGE TERMINAL, 3 LEVELS, 20A, 12-26 AWG, GREY	3210499	PHO-3210499KE	PHOENIX CONTACT
	1	PT 2.5-3L, PARTITION PLATE, 3 LEVELS, GREY	3211647	PHO-3211647KE	PHOENIX CONTACT
	1	GROUP MARKER FOR END BRACKET CLIPFIX 35, LONG, HEIGHT-ADJUSTABLE, GRAY	0814788	PHO-0814788KE	PHOENIX CONTACT
TB-COM	1	END BRACKET, CLIPFIX 35, GREY	3022218	PHO-3022218KE	PHOENIX CONTACT
	1	GROUP MARKER FOR END BRACKET CLIPFIX 35, HEIGHT-ADJUSTABLE, GRAY	0811969	PHO-0811969KE	PHOENIX CONTACT
	6	PTTB4, PUSH-IN TERMINAL, 2 LEVELS, 28A, GREY, 10-24 AWG	3211786	PHO-3211786KE	PHOENIX CONTACT
	1	PTTB4 PARTITION PLATE, GREY, (D-STTB4)	3030462	PHO-3030462KE	PHOENIX CONTACT
TB-DI201	1	GROUP MARKER FOR END BRACKET CLIPFIX 35, HEIGHT-ADJUSTABLE, GRAY	0811969	PHO-0811969KE	PHOENIX CONTACT
	32	PTTB4, PUSH-IN TERMINAL, 2 LEVELS, 28A, GREY, 10-24 AWG	3211786	PHO-3211786KE	PHOENIX CONTACT
	1	PTTB4 PARTITION PLATE, GREY, (D-STTB4)	3030462	PHO-3030462KE	PHOENIX CONTACT
TB-DI202	1	END BRACKET, CLIPFIX 35, GREY	3022218	PHO-3022218KE	PHOENIX CONTACT
	1	GROUP MARKER FOR END BRACKET CLIPFIX 35, HEIGHT-ADJUSTABLE, GRAY	0811969	PHO-0811969KE	PHOENIX CONTACT
	32	PTTB4, PUSH-IN TERMINAL, 2 LEVELS, 28A, GREY, 10-24 AWG	3211786	PHO-3211786KE	PHOENIX CONTACT
	1	PTTB4 PARTITION PLATE, GREY, (D-STTB4)	3030462	PHO-3030462KE	PHOENIX CONTACT
TB-DO201	1	GROUP MARKER FOR END BRACKET CLIPFIX 35, HEIGHT-ADJUSTABLE, GRAY	0811969	PHO-0811969KE	PHOENIX CONTACT
	2	PTTB4, PUSH-IN TERMINAL, 2 LEVELS, 28A, GREY, 10-24 AWG	3211786	PHO-3211786KE	PHOENIX CONTACT
	1	PTTB4 PARTITION PLATE, GREY, (D-STTB4)	3030462	PHO-3030462KE	PHOENIX CONTACT
TB-DO202	1	GROUP MARKER FOR END BRACKET CLIPFIX 35, HEIGHT-ADJUSTABLE, GRAY	0811969	PHO-0811969KE	PHOENIX CONTACT
	7	PTTB4, PUSH-IN TERMINAL, 2 LEVELS, 28A, GREY, 10-24 AWG	3211786	PHO-3211786KE	PHOENIX CONTACT
	1	PTTB4 PARTITION PLATE, GREY, (D-STTB4)	3030462	PHO-3030462KE	PHOENIX CONTACT
TB-ESR1	1	GROUP MARKER FOR END BRACKET CLIPFIX 35, HEIGHT-ADJUSTABLE, GRAY	0811969	PHO-0811969KE	PHOENIX CONTACT
	1	PTTB4, PUSH-IN TERMINAL, 2 LEVELS, 28A, GREY, 10-24 AWG	3211786	PHO-3211786KE	PHOENIX CONTACT
	1	PTTB4 PARTITION PLATE, GREY, (D-STTB4)	3030462	PHO-3030462KE	PHOENIX CONTACT
TB-ESTOP	1	GROUP MARKER FOR END BRACKET CLIPFIX 35, HEIGHT-ADJUSTABLE, GRAY	0811969	PHO-0811969KE	PHOENIX CONTACT
	5	PTTB4, PUSH-IN TERMINAL, 2 LEVELS, 28A, GREY, 10-24 AWG	3211786	PHO-3211786KE	PHOENIX CONTACT
	1	PTTB4 PARTITION PLATE, GREY, (D-STTB4)	3030462	PHO-3030462KE	PHOENIX CONTACT
TB-EXT	1	GROUP MARKER FOR END BRACKET CLIPFIX 35, HEIGHT-ADJUSTABLE, GRAY	0811969	PHO-0811969KE	PHOENIX CONTACT
	6	PTTB4, PUSH-IN TERMINAL, 2 LEVELS, 28A, GREY, 10-24 AWG	3211786	PHO-3211786KE	PHOENIX CONTACT
	1	PTTB4 PARTITION PLATE, GREY, (D-STTB4)	3030462	PHO-3030462KE	PHOENIX CONTACT
TB-INTER	1	GROUP MARKER FOR END BRACKET CLIPFIX 35, HEIGHT-ADJUSTABLE, GRAY	0811969	PHO-0811969KE	PHOENIX CONTACT
	19	PTTB4, PUSH-IN TERMINAL, 2 LEVELS, 28A, GREY, 10-24 AWG	3211786	PHO-3211786KE	PHOENIX CONTACT
	4	PTTB4 PARTITION PLATE, GREY, (D-STTB4)	3030462	PHO-3030462KE	PHOENIX CONTACT
TB-NEUTRAL	1	END BRACKET, CLIPFIX 35, GREY	3022218	PHO-3022218KE	PHOENIX CONTACT
	1	GROUP MARKER FOR END BRACKET CLIPFIX 35, HEIGHT-ADJUSTABLE, GRAY	0811969	PHO-0811969KE	PHOENIX CONTACT
	4	PTTB4, PUSH-IN TERMINAL, 2 LEVELS, 28A, GREY, 10-24 AWG	3211786	PHO-3211786KE	PHOENIX CONTACT
	3	PTTB4 PARTITION PLATE, GREY, (D-STTB4)	3030462	PHO-3030462KE	PHOENIX CONTACT
TB-NEUTRAL-2	1	END BRACKET, CLIPFIX 35, GREY	3022218	PHO-3022218KE	PHOENIX CONTACT
	1	GROUP MARKER FOR END BRACKET CLIPFIX 35, HEIGHT-ADJUSTABLE, GRAY	0811969	PHO-0811969KE	PHOENIX CONTACT
	1	PTTB4, PUSH-IN TERMINAL, 2 LEVELS, 28A, GREY, 10-24 AWG	3211786	PHO-3211786KE	PHOENIX CONTACT
	1	PTTB4 PARTITION PLATE, GREY, (D-STTB4)	3030462	PHO-3030462KE	PHOENIX CONTACT
TB-NEUTRAL-EXT	1	END BRACKET, CLIPFIX 35, GREY	3022218	PHO-3022218KE	PHOENIX CONTACT
	1	GROUP MARKER FOR END BRACKET CLIPFIX 35, HEIGHT-ADJUSTABLE, GRAY	0811969	PHO-0811969KE	PHOENIX CONTACT
	1	PT4, PUSH-IN TERMINAL, 1 LEVEL, 32A, GREY, 10-24 AWG	3211757	PHO-3211757KE	PHOENIX CONTACT
	1	PT4 PARTITION PLATE, GREY, (D-ST4)	3030420	PHO-3030420KE	PHOENIX CONTACT
TB-SPARE	1	END BRACKET, CLIPFIX 35, GREY	3022218	PHO-3022218KE	PHOENIX CONTACT

TAG	QTY	DESCRIPTION	CAT. NO.	CAT. NO. (FOURNIER)	MANUFACTURER
	1	GROUP MARKER FOR END BRACKET CLIPFIX 35, HEIGHT-ADJUSTABLE, GRAY	0811969	PHO-0811969KE	PHOENIX CONTACT
	5	PTTB4, PUSH-IN TERMINAL, 2 LEVELS, 28A, GREY, 10-24 AWG	3211786	PHO-3211786KE	PHOENIX CONTACT
	1	PTTB4 PARTITION PLATE, GREY, (D-STTB4)	3030462	PHO-3030462KE	PHOENIX CONTACT
UPS201	1	UPS, 120 VAC INPUT/OUTPUT, 750VA, 6, WITH INTEGRATED ENERGY STORAGE, 4 AH	2905908		PHOENIX CONTACT

NOT TO BE USED FOR INSTALLATION
USE REV 2.X
(FOR CONSTRUCTION)

Notes générales / General notes

Rev.	Description	Date	Dessiné / Drawn
0.0	FOR APPROVAL	04/07/2023	D. MARTEL

CE DESSIN ET TOUTES LES INFORMATIONS QU'IL CONTIENT SONT LA PROPRIÉTÉ EXCLUSIVE DE LES INDUSTRIES FOURNIER INC. IL EST STRICTEMENT INTERDIT DE COMMUNIQUER OU UTILISER SON CONTENU À D'AUTRES FINS QUE CELLES PERMISES ORIGINALEMENT OU POUVANT ÊTRE PRÉJUDICIABLES AUX INTÉRÊTS DE LES INDUSTRIES FOURNIER INC. TOUTE REPRODUCTION DE CE DESSIN EST INTERDITE ET IL DOIT ÊTRE RETOURNÉ SUR DEMANDE.

THIS DRAWING AND ALL THE INFORMATION IT CONTAINS ARE THE EXCLUSIVE PROPERTY OF FOURNIER INDUSTRIES INC. IT IS STRICTLY FORBIDDEN TO COMMUNICATE OR USE THE INFORMATION FOR PURPOSES OTHER THAN THE ORIGINAL INTENDED ONES OR IF THE USE COULD BE HARMFUL TO THE INTERESTS OF FOURNIER INDUSTRIES INC. THIS DRAWING IN WHOLE OR IN PART MAY NOT BE REPRODUCED IN ANY FASHION AND HAS TO BE RETURNED TO FOURNIER INDUSTRIES INC. UPON REQUEST.

LES INDUSTRIES FOURNIER INC.
FOURNIER INDUSTRIES INC.
3787 BOUL. FRONTENAC OUEST
THETFORD MINES, QUÉBEC, CANADA, G6H 2B5

Sceau / Stamp

Créer par / Created by	D. MARTEL
Vérifié / Checked	G. ARCAND
Approuvé / Approuved	M.-A. TURGEON
Date de création / Creation date	16/06/2023
Échelle / Scale	

WINNIPEG, MB

2 X ROTARY PRESS 3(4)-900/4000CVP

CONTROL PANEL
LIST OF MATERIAL – (2 OF 2)

No Projet / Project No.	No Dessin/ Drawing No.	Revision
2023-11911	D - 23-8460 - 202	0.0

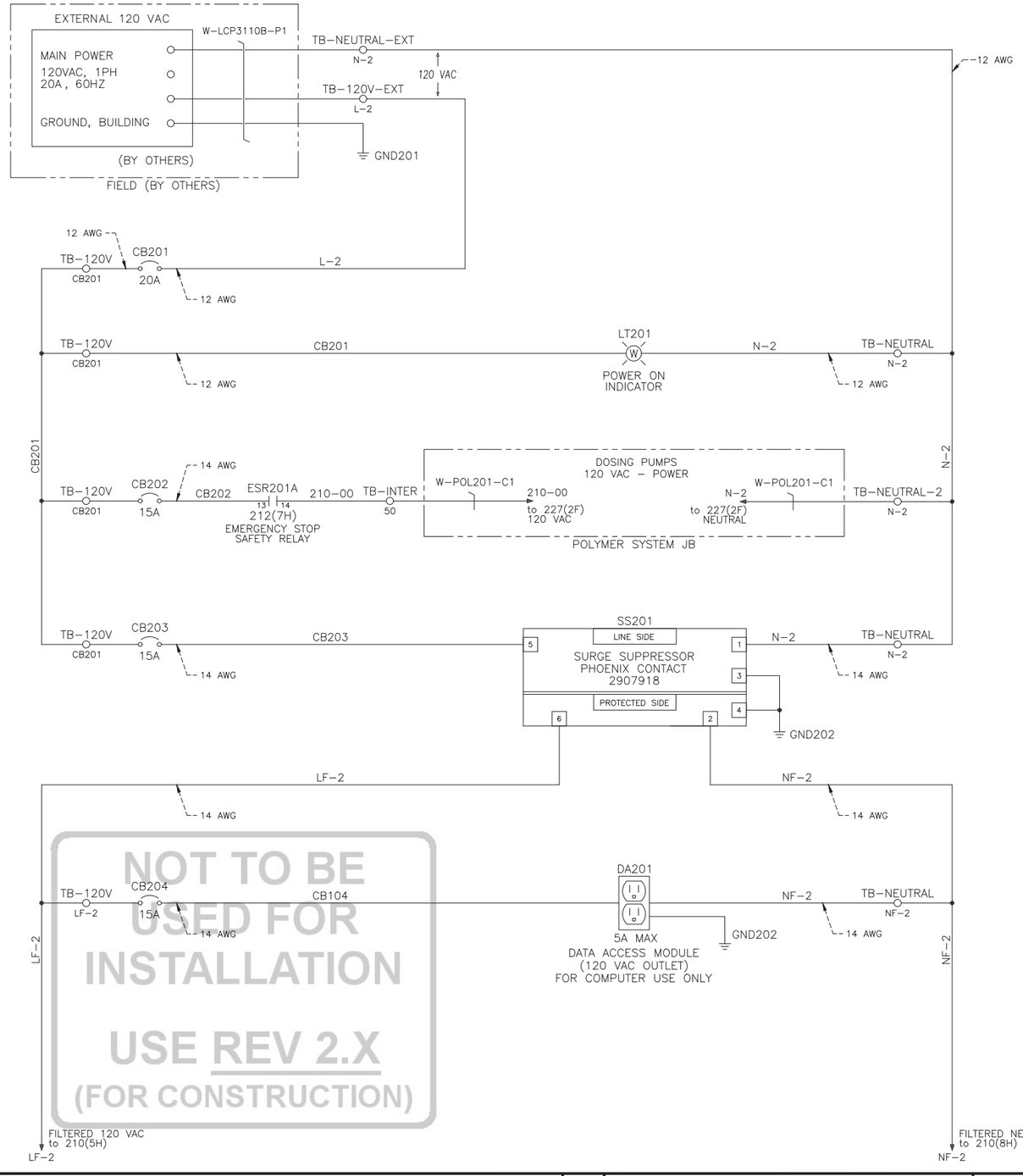

NOT TO BE USED FOR INSTALLATION

USE REV 2.X
(FOR CONSTRUCTION)

Notes générales / General notes

NOTE 1:
BUILT-IN WITH 6.3A INPUT FUSE.

Rev.	Description	Date	Dessiné / Drawn
0.0	FOR APPROVAL	04/07/2023	D. MARTEL

LES INDUSTRIES FOURNIER INC.
FOURNIER INDUSTRIES INC.
3787 BOUL. FRONTENAC OUEST
THETFORD MINES, QUÉBEC, CANADA, G6H 2B5

CE DESSIN ET TOUTES LES INFORMATIONS QU'IL CONTIENT SONT LA PROPRIÉTÉ EXCLUSIVE DE LES INDUSTRIES FOURNIER INC. IL EST STRICTEMENT INTERDIT DE COMMUNIQUER OU UTILISER SON CONTENU À D'AUTRES FINS QUE CELLES PERMISES ORIGINALEMENT OU POUVANT ÊTRE PRÉJUDICIABLES AUX INTÉRÊTS DE LES INDUSTRIES FOURNIER INC. TOUTE REPRODUCTION DE CE DESSIN EST INTERDITE ET IL DOIT ÊTRE RETOURNÉ SUR DEMANDE.

THIS DRAWING AND ALL THE INFORMATION IT CONTAINS ARE THE EXCLUSIVE PROPERTY OF FOURNIER INDUSTRIES INC. IT IS STRICTLY FORBIDDEN TO COMMUNICATE OR USE THE INFORMATION FOR PURPOSES OTHER THAN THE ORIGINAL INTENDED ONES OR IF THE USE COULD BE HARMFUL TO THE INTERESTS OF FOURNIER INDUSTRIES INC. THIS DRAWING IN WHOLE OR IN PART MAY NOT BE REPRODUCED IN ANY FASHION AND HAS TO BE RETURNED TO FOURNIER INDUSTRIES INC. UPON REQUEST.

Sceau / Stamp

Créer par / Created by	D. MARTEL
Vérifié / Checked	G. ARCAND
Approuvé / Approuved	M.-A. TURGEON
Date de création / Creation date	16/06/2023
Échelle / Scale	

WINNIPEG, MB
2 X ROTARY PRESS 3(4)-900/4000CVP

CONTROL PANEL
ELECTRICAL ARRANGEMENT - 120 VAC

No Projet / Project No.	No Dessin/ Drawing No.	Revision
2023-11911	D- 23-8460 - 210	0.0

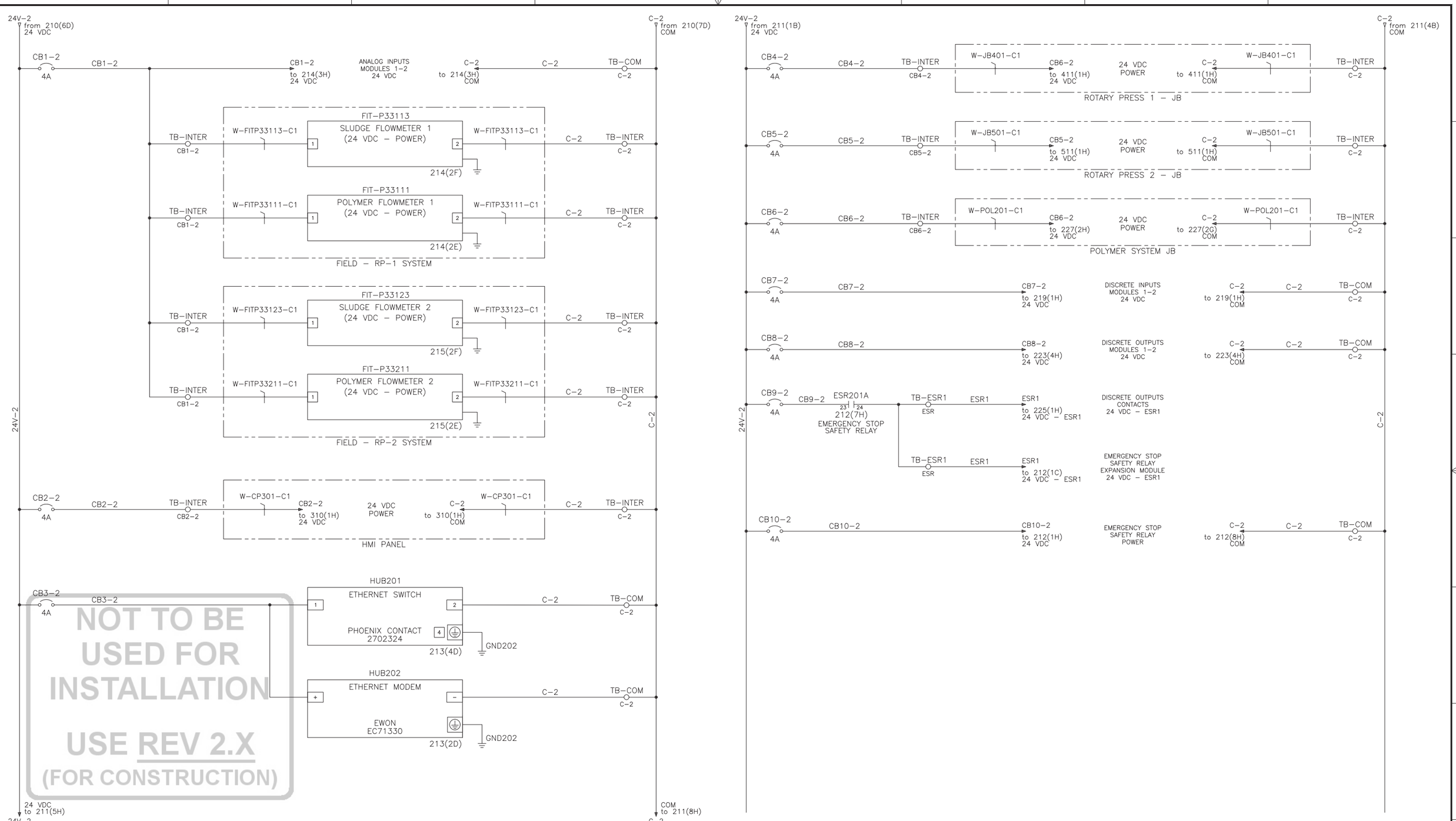

Notes générales / General notes

Rev.	Description	Date	Dessiné / Drawn
0.0	FOR APPROVAL	04/07/2023	D. MARTEL

CE DESSIN ET TOUTES LES INFORMATIONS QU'IL CONTIENT SONT LA PROPRIÉTÉ EXCLUSIVE DE LES INDUSTRIES FOURNIER INC. IL EST STRICTEMENT INTERDIT DE COMMUNIQUER OU UTILISER SON CONTENU À D'AUTRES FINS QUE CELLES PERMISES ORIGINALEMENT OU POUVANT ÊTRE PRÉJUDICIABLES AUX INTÉRÊTS DE LES INDUSTRIES FOURNIER INC. TOUTE REPRODUCTION DE CE DESSIN EST INTERDITE ET IL DOIT ÊTRE RETOURNÉ SUR DEMANDE.

THIS DRAWING AND ALL THE INFORMATION IT CONTAINS ARE THE EXCLUSIVE PROPERTY OF FOURNIER INDUSTRIES INC. IT IS STRICTLY FORBIDDEN TO COMMUNICATE OR USE THE INFORMATION FOR PURPOSES OTHER THAN THE ORIGINAL INTENDED ONES OR IF THE USE COULD BE HARMFUL TO THE INTERESTS OF FOURNIER INDUSTRIES INC. THIS DRAWING IN WHOLE OR IN PART MAY NOT BE REPRODUCED IN ANY FASHION AND HAS TO BE RETURNED TO FOURNIER INDUSTRIES INC. UPON REQUEST.

LES INDUSTRIES FOURNIER INC.
FOURNIER INDUSTRIES INC.
3787 BOUL. FRONTENAC OUEST
THETFORD MINES, QUÉBEC, CANADA, G6H 2B5

Sceau / Stamp

Créer par / Created by	D. MARTEL
Vérifié / Checked	G. ARCAND
Approuvé / Approuved	M.-A. TURGEON
Date de création / Creation date	16/06/2023
Échelle / Scale	

WINNIPEG, MB

2 X ROTARY PRESS 3(4)-900/4000CVP

CONTROL PANEL
ELECTRICAL ARRANGEMENT - 24 VDC

No Projet / Project No.	No Dessin/ Drawing No.	Revision
2023-11911	D- 23-8460 - 211	0.0

CB10-2
from 211(6D)
24 VDC

CB10-2

C-2
from 211(7D)
COM

ESR201A
EMERGENCY STOP
SAFETY RELAY
PHOENIX CONTACT
2981059

CB10-2 — A1 — 24 VDC — A2 — C-2

212-09 — TB-ESTOP 9 — ESR201B 71/72 212(1A) EMERGENCY STOP SAFETY RELAY EXPANSION MODULE — 212-07 — TB-ESTOP 7 — 212-07 — S33 RESET 1-A

INTER-PANEL TERMINAL
TB-EXT 5 — W-LCP3110A-C1 — 212-09 to 113(2F) — EMERGENCY STOP SAFETY RELAY EXPANSION MODULE CONTACT — 212-10 to 113(2F) — W-LCP3110A-C1 — INTER-PANEL TERMINAL TB-EXT 6
POWER PANEL

212-10 — TB-ESTOP 10 — W-CP301-C1 — 212-10 to 310(2G) — MASTER CONTROL RESET CONTACT #1 — 212-08 to 310(2G) — W-CP301-C1 — 212-08 — TB-ESTOP 8 — 212-08 — S34 RESET 1-B

CB7-2 — CB7-2 to 310(2F) — MASTER CONTROL RESET CONTACT #2 — 219-01 to 310(2F) — 219-01 — 219-01 from 219(2G) — MASTER CONTROL RESET CONTACT #2 SIGNAL TO PLC — S35
HMI PANEL

CB7-2 — CB7-2 from 219(1G)

212-04 — TB-ESTOP 4 — W-CP301-C1 — 212-04 to 310(2H) — EMERGENCY STOP PUSHBUTTON CONTACT — 212-05 to 310(2H) — W-CP301-C1 — 212-05 — TB-ESTOP 5 — JUMPER — TB-ESTOP 6 — 212-06 — S11 INPUT 1-A
HMI PANEL

212-03 — TB-ESTOP 3 — W-JB501-C1 — 212-04 to 511(2H) — EMERGENCY STOP PUSHBUTTON CONTACT — 212-03 to 511(2H) — W-JB501-C1
ROTARY PRESS 2 – JB

212-03 — TB-ESTOP 3 — W-JB401-C1 — 212-03 to 411(2H) — EMERGENCY STOP PUSHBUTTON CONTACT — 212-02 to 411(2H) — W-JB401-C1
ROTARY PRESS 1 – JB

212-02 — TB-ESTOP 2 — JUMPER — TB-ESTOP 1 — 212-01 — S12 INPUT 1-B

JUMPER — S22 1 CHANNEL MODE

* NOTE 1

NO 210(2E),211(5E),212(2C)
NC 219(2H)

CB2-1 — INTER-PANEL TERMINAL TB-EXT 3 — W-LCP3110A-C1 — CB2-1 from 113(2H) 24 VDC — SAFETY CONTACT TO POWER PANEL

212-12 — TB-EXT 4 — 212-12 to 113(2G) 24 VDC – ESR1
POWER PANEL

ESR201A 33/34 212(7H) EMERGENCY STOP SAFETY RELAY

ESR1
from 211(6E)
24 VDC – ESR1

ESR1

ESR201B
EMERGENCY STOP
SAFETY RELAY
EXPANSION MODULE
PHOENIX CONTACT
2963734

ESR1 — A11 — 24 VDC — A2 — C-2

JUMPER — A12

NO 226(2G),226(2H)
NC 212(4G)

NOT TO BE USED FOR INSTALLATION
USE REV 2.X
(FOR CONSTRUCTION)

Notes générales / General notes

NOTE 1:

PHOENIX CONTACT
2981059 & 2963734

CONTACT RATING
250V AC/DC, 6A

Rev.	Description	Date	Dessiné / Drawn
0.0	FOR APPROVAL	04/07/2023	D. MARTEL

LES INDUSTRIES FOURNIER INC.
FOURNIER INDUSTRIES INC.
3787 BOUL. FRONTENAC OUEST
THETFORD MINES, QUÉBEC, CANADA, G6H 2B5

CE DESSIN ET TOUTES LES INFORMATIONS QU'IL CONTIENT SONT LA PROPRIÉTÉ EXCLUSIVE DE LES INDUSTRIES FOURNIER INC. IL EST STRICTEMENT INTERDIT DE COMMUNIQUER OU UTILISER SON CONTENU À D'AUTRES FINS QUE CELLES PERMISES ORIGINALEMENT OU POUVANT ÊTRE PRÉJUDICIABLES AUX INTÉRÊTS DE LES INDUSTRIES FOURNIER INC. TOUTE REPRODUCTION DE CE DESSIN EST INTERDITE ET IL DOIT ÊTRE RETOURNÉ SUR DEMANDE.

THIS DRAWING AND ALL THE INFORMATION IT CONTAINS ARE THE EXCLUSIVE PROPERTY OF FOURNIER INDUSTRIES INC. IT IS STRICTLY FORBIDDEN TO COMMUNICATE OR USE THE INFORMATION FOR PURPOSES OTHER THAN THE ORIGINAL INTENDED ONES OR IF THE USE COULD BE HARMFUL TO THE INTERESTS OF FOURNIER INDUSTRIES INC. THIS DRAWING IN WHOLE OR IN PART MAY NOT BE REPRODUCED IN ANY FASHION AND HAS TO BE RETURNED TO FOURNIER INDUSTRIES INC. UPON REQUEST.

Sceau / Stamp

Créer par / Created by	D. MARTEL
Vérifié / Checked	G. ARCAND
Approuvé / Approuved	M.-A. TURGEON
Date de création / Creation date	16/06/2023
Échelle / Scale	

WINNIPEG, MB
2 X ROTARY PRESS 3(4)-900/4000CVP

CONTROL PANEL
SAFETY ARRANGEMENT

No Projet / Project No.	No Dessin/ Drawing No.	Revision
2023-11911	D - 23-8460 - 212	0.0

HMI PANEL

OPERATOR INTERFACE
OI301

310(3C)

RACK201	PLCPS201	SLOT 0–1	SLOT 2	SLOT 3	SLOT 4	SLOT 5	SLOT 6	SLOT 7	SLOT 8	SLOT 9	SLOT 10	SLOT 11	SLOT 12
		PLC201	AI201	AI202	AI203	AO201	AO202	DI201	DI202	DO201	DO202		
SCHNEIDER ELECTRIC BMX XBP 1200	SCHNEIDER ELECTRIC BMX CPS 3500	SCHNEIDER ELECTRIC BME P58 2020 01 02 03	8–PT ANALOG INPUTS	8–PT ANALOG INPUTS	8–PT ANALOG INPUTS	8–CH ANALOG OUTPUTS	8–CH ANALOG OUTPUTS	32–PT DISCRETE INPUTS	32–PT DISCRETE INPUTS	16–PT DISCRETE OUTPUTS	16–PT DISCRETE OUTPUTS	FILLER MODULE	FILLER MODULE
210(6C)			214(4H)	215(4H)	216(4H)	217(1H)	218(1H)	219(4H)	221(4H)	223(1H)	224(1H)		

W–CP301–E1
PORT 1

ETHERNET SWITCH
HUB201

PORT 2
PLC201

PORT 4
DA201

DATA ACCESS MODULE
(ETHERNET PORT)
DA201

TECHNICIAN COMPUTER

FOR COMPUTER USE ONLY

TO ETHERNET COUPLER

210(3C)

ETHERNET MODEM
HUB202

INTERNET SOURCE
W–LCP3110B–E2

HUB202
PORT 7

TO PLANT SCADA
W–LCP3110B–E1
PORT 8

211(2C)

W–LCP3110A–E1
PORT 3

ETHERNET SWITCH
HUB101

PORT 8

112(2H)

CONNECTED DEVICES

VFD – ROTARY PRESS 1
VFD – ROTARY PRESS 2
VFD – FLOCCULATOR 1
VFD – FLOCCULATOR 2

SEE NETWORK ARRANGEMENT DIAGRAM FOR DETAILS.

POWER PANEL

NOT TO BE USED FOR INSTALLATION
USE REV 2 X
(FOR CONSTRUCTION)

DEVICES CONNECTED TO ETHERNET MODEM HUB202

PORT	DEVICE DESCRIPTION	IP ADDRESS
1	ETHERNET SWITCH (HUB201)	192.168.100.1
2	SPARE	–
3	SPARE	–
4	INTERNET SOURCE	–
	ETHERNET MODEM (HUB202)	192.168.100.25

DEVICES CONNECTED TO ETHERNET SWITCH HUB201

PORT	DEVICE DESCRIPTION	IP ADDRESS
1	OPERATOR INTERFACE (OI301)	192.168.100.12
2	PLC (PLC201)	192.168.100.11
3	POWER PANEL SWITCH (HUB101)	192.168.100.2
4	DATA ACCESS MODULE (DA201)	192.168.100.13
5	SPARE	–
6	SPARE	–
7	ETHERNET MODEM (HUB202)	192.168.100.25
8	TO PLANT SCADA	–
	ETHERNET SWITCH (HUB201)	192.168.100.1

Notes générales / General notes

Rev.	Description	Date	Dessiné / Drawn
0.0	FOR APPROVAL	04/07/2023	D. MARTEL

LES INDUSTRIES FOURNIER INC.
FOURNIER INDUSTRIES INC.
3787 BOUL. FRONTENAC OUEST
THETFORD MINES, QUÉBEC, CANADA, G6H 2B5

CE DESSIN ET TOUTES LES INFORMATIONS QU'IL CONTIENT SONT LA PROPRIÉTÉ EXCLUSIVE DE LES INDUSTRIES FOURNIER INC. IL EST STRICTEMENT INTERDIT DE COMMUNIQUER OU UTILISER SON CONTENU À D'AUTRES FINS QUE CELLES PERMISES ORIGNALEMENT OU POUVANT ÊTRE PRÉJUDICIABLES AUX INTÉRÊTS DE LES INDUSTRIES FOURNIER INC. TOUTE REPRODUCTION DE CE DESSIN EST INTERDITE ET IL DOIT ÊTRE RETOURNÉ SUR DEMANDE.

THIS DRAWING AND ALL THE INFORMATION IT CONTAINS ARE THE EXCLUSIVE PROPERTY OF FOURNIER INDUSTRIES INC. IT IS STRICTLY FORBIDDEN TO COMMUNICATE OR USE THE INFORMATION FOR PURPOSES OTHER THAN THE ORIGINAL INTENDED ONES OR IF THE USE COULD BE HARMFUL TO THE INTERESTS OF FOURNIER INDUSTRIES INC. THIS DRAWING IN WHOLE OR IN PART MAY NOT BE REPRODUCED IN ANY FASHION AND HAS TO BE RETURNED TO FOURNIER INDUSTRIES INC. UPON REQUEST.

Sceau / Stamp

Créer par / Created by: D. MARTEL
Vérifié / Checked: G. ARCAND
Approuvé / Approuved: M.–A. TURGEON
Date de création / Creation date: 16/06/2023
Échelle / Scale:

WINNIPEG, MB

2 X ROTARY PRESS 3(4)–900/4000CVP

CONTROL PANEL
PLC & NETWORK ARRANGEMENT

No Projet / Project No.	No Dessin/ Drawing No.	Revision
2023-11911	D - 23-8460 - 213	0.0

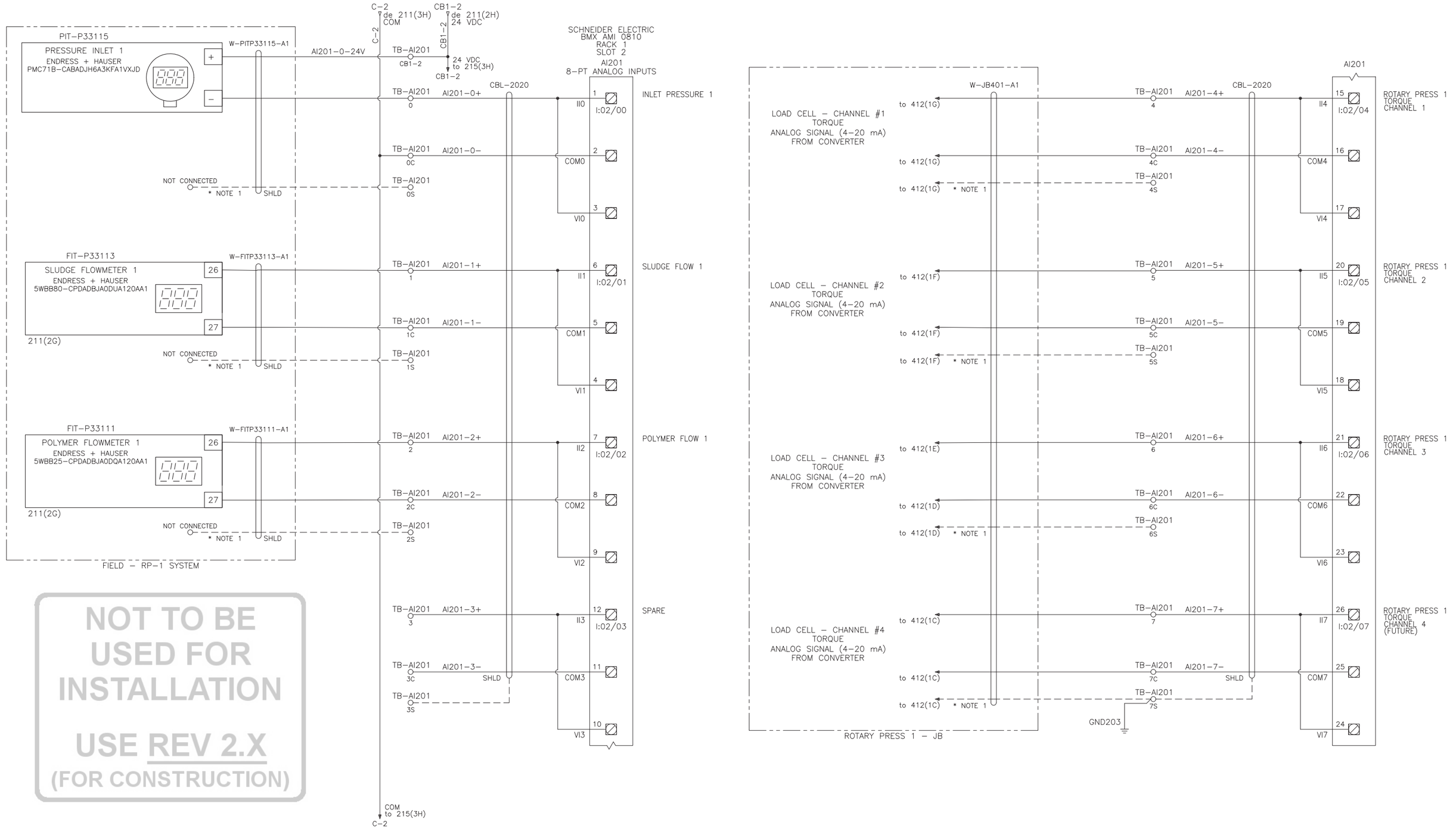

NOT TO BE USED FOR INSTALLATION

USE REV 2.X
(FOR CONSTRUCTION)

Notes générales / General notes

NOTE 1:
CABLE SHIELDING MUST STAY UNCONNECTED ON THIS SIDE.

Rev.	Description	Date	Dessiné / Drawn
0.0	FOR APPROVAL	04/07/2023	D. MARTEL

LES INDUSTRIES FOURNIER INC.
FOURNIER INDUSTRIES INC.
3787 BOUL. FRONTENAC OUEST
THETFORD MINES, QUÉBEC, CANADA, G6H 2B5

CE DESSIN ET TOUTES LES INFORMATIONS QU'IL CONTIENT SONT LA PROPRIÉTÉ EXCLUSIVE DE LES INDUSTRIES FOURNIER INC. IL EST STRICTEMENT INTERDIT DE COMMUNIQUER OU UTILISER SON CONTENU À D'AUTRES FINS QUE CELLES PERMISES ORIGINALEMENT OU POUVANT ÊTRE PRÉJUDICIABLES AUX INTÉRÊTS DE LES INDUSTRIES FOURNIER INC. TOUTE REPRODUCTION DE CE DESSIN EST INTERDITE ET IL DOIT ÊTRE RETOURNÉ SUR DEMANDE.

THIS DRAWING AND ALL THE INFORMATION IT CONTAINS ARE THE EXCLUSIVE PROPERTY OF FOURNIER INDUSTRIES INC. IT IS STRICTLY FORBIDDEN TO COMMUNICATE OR USE THE INFORMATION FOR PURPOSES OTHER THAN THE ORIGINAL INTENDED ONES OR IF THE USE COULD BE HARMFUL TO THE INTERESTS OF FOURNIER INDUSTRIES INC. THIS DRAWING IN WHOLE OR IN PART, MAY NOT BE REPRODUCED IN ANY FASHION AND HAS TO BE RETURNED TO FOURNIER INDUSTRIES INC. UPON REQUEST.

Sceau / Stamp

Créer par / Created by	D. MARTEL
Vérifié / Checked	G. ARCAND
Approuvé / Approuved	M.–A. TURGEON
Date de création / Creation date	16/06/2023
Échelle / Scale	

WINNIPEG, MB

2 X ROTARY PRESS 3(4)–900/4000CVP

CONTROL PANEL
ANALOG INPUTS – MODULE 1

No Projet / Project No.	No Dessin/ Drawing No.	Revision
2023-11911	D - 23-8460 - 214	0.0

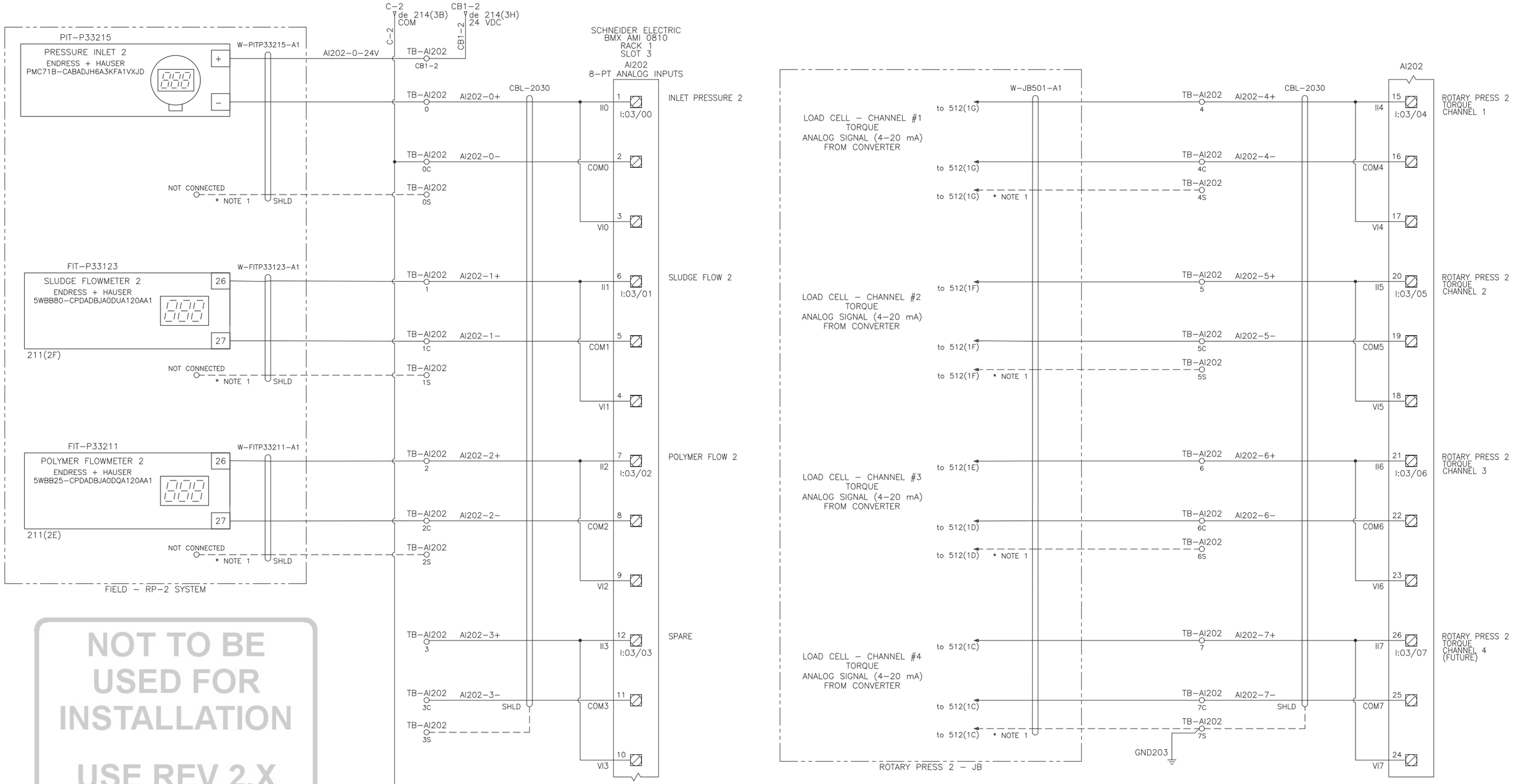

NOT TO BE USED FOR INSTALLATION

USE REV 2.X
(FOR CONSTRUCTION)

Notes générales / General notes

NOTE 1:
CABLE SHIELDING MUST STAY UNCONNECTED ON THIS SIDE.

Rev.	Description	Date	Dessiné / Drawn
0.0	FOR APPROVAL	04/07/2023	D. MARTEL

LES INDUSTRIES FOURNIER INC.
FOURNIER INDUSTRIES INC.
3787 BOUL. FRONTENAC OUEST
THETFORD MINES, QUÉBEC, CANADA, G6H 2B5

CE DESSIN ET TOUTES LES INFORMATIONS QU'IL CONTIENT SONT LA PROPRIÉTÉ EXCLUSIVE DE LES INDUSTRIES FOURNIER INC. IL EST STRICTEMENT INTERDIT DE COMMUNIQUER OU UTILISER SON CONTENU À D'AUTRES FINS QUE CELLES PERMISES ORIGINALEMENT OU POUVANT ÊTRE PRÉJUDICIABLES AUX INTÉRÊTS DE LES INDUSTRIES FOURNIER INC. TOUTE REPRODUCTION DE CE DESSIN EST INTERDITE ET IL DOIT ÊTRE RETOURNÉ SUR DEMANDE.

THIS DRAWING AND ALL THE INFORMATION IT CONTAINS ARE THE EXCLUSIVE PROPERTY OF FOURNIER INDUSTRIES INC. IT IS STRICTLY FORBIDDEN TO COMMUNICATE OR USE THE INFORMATION FOR PURPOSES OTHER THAN THE ORIGINAL INTENDED ONES OR IF THE USE COULD BE HARMFUL TO THE INTERESTS OF FOURNIER INDUSTRIES INC. THIS DRAWING IN WHOLE OR IN PART MAY NOT BE REPRODUCED IN ANY FASHION AND HAS TO BE RETURNED TO FOURNIER INDUSTRIES INC. UPON REQUEST.

Sceau / Stamp

Créer par / Created by	D. MARTEL
Vérifié / Checked	G. ARCAND
Approuvé / Approuved	M.–A. TURGEON
Date de création / Creation date	16/06/2023
Échelle / Scale	

WINNIPEG, MB

2 X ROTARY PRESS 3(4)–900/4000CVP

CONTROL PANEL
ANALOG INPUTS – MODULE 2

No Projet / Project No.	No Dessin/ Drawing No.	Revision
2023-11911	D - 23-8460 - 215	0.0

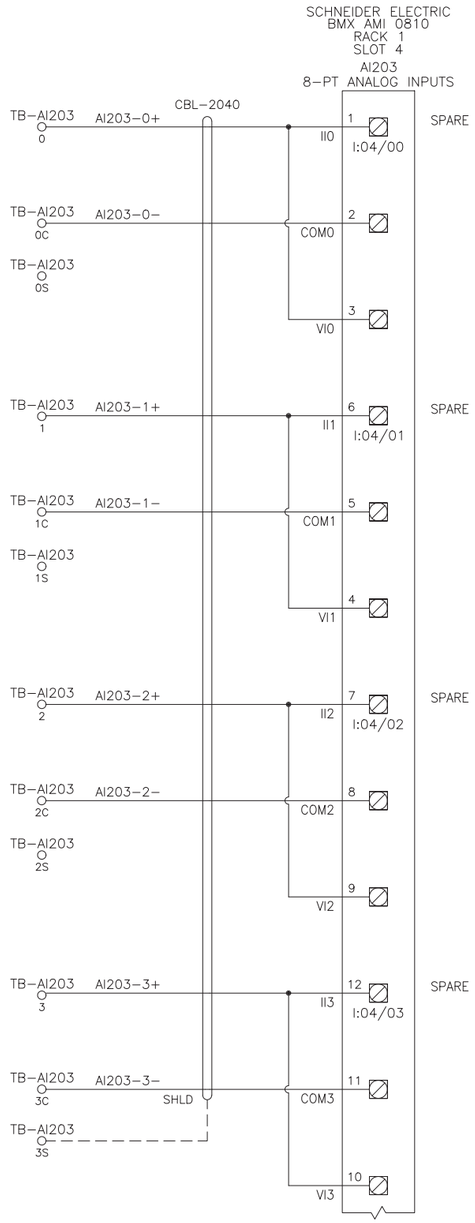

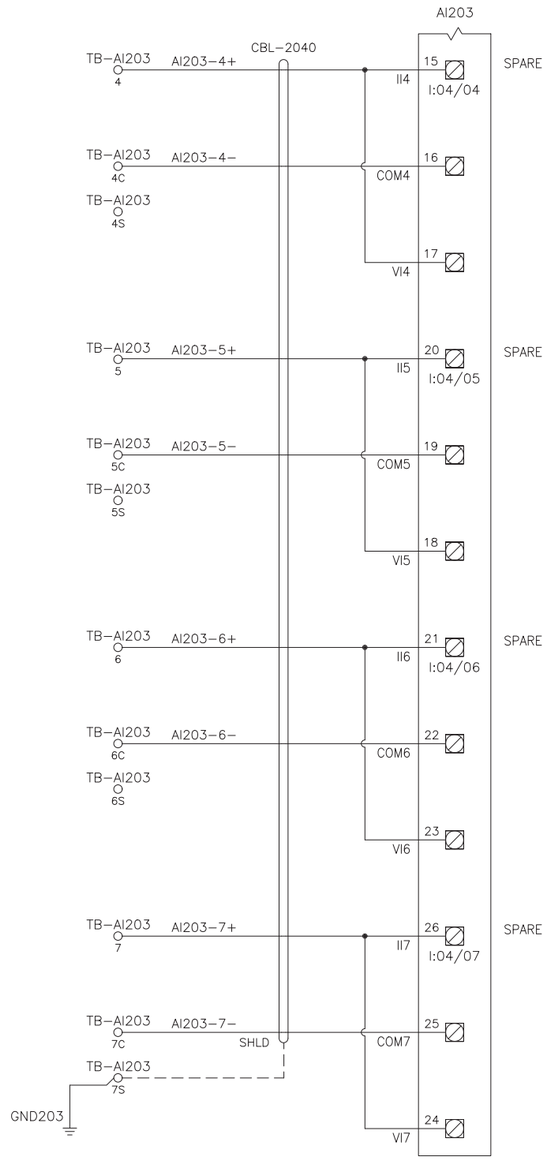

NOT TO BE USED FOR INSTALLATION

USE REV 2.X
(FOR CONSTRUCTION)

Notes générales / General notes

NOTE 1:
CABLE SHIELDING MUST STAY UNCONNECTED ON THIS SIDE.

Rev.	Description	Date	Dessiné / Drawn
0.0	FOR APPROVAL	04/07/2023	D. MARTEL

LES INDUSTRIES FOURNIER INC.
FOURNIER INDUSTRIES INC.
3787 BOUL. FRONTENAC OUEST
THETFORD MINES, QUÉBEC, CANADA, G6H 2B5

CE DESSIN ET TOUTES LES INFORMATIONS QU'IL CONTIENT SONT LA PROPRIÉTÉ EXCLUSIVE DE LES INDUSTRIES FOURNIER INC. IL EST STRICTEMENT INTERDIT DE COMMUNIQUER OU UTILISER SON CONTENU À D'AUTRES FINS QUE CELLES PERMISES ORIGINALEMENT OU POUVANT ÊTRE PRÉJUDICIABLES AUX INTÉRÊTS DE LES INDUSTRIES FOURNIER INC. TOUTE REPRODUCTION DE CE DESSIN EST INTERDITE ET IL DOIT ÊTRE RETOURNÉ SUR DEMANDE.

THIS DRAWING AND ALL THE INFORMATION IT CONTAINS ARE THE EXCLUSIVE PROPERTY OF FOURNIER INDUSTRIES INC. IT IS STRICTLY FORBIDDEN TO COMMUNICATE OR USE THE INFORMATION FOR PURPOSES OTHER THAN THE ORIGINAL INTENDED ONES OR IF THE USE COULD BE HARMFUL TO THE INTERESTS OF FOURNIER INDUSTRIES INC. THIS DRAWING IN WHOLE OR IN PART MAY NOT BE REPRODUCED IN ANY FASHION AND HAS TO BE RETURNED TO FOURNIER INDUSTRIES INC. UPON REQUEST.

Sceau / Stamp

Créer par / Created by	D. MARTEL
Vérifié / Checked	G. ARCAND
Approuvé / Approuved	M.-A. TURGEON
Date de création / Creation date	16/06/2023
Échelle / Scale	

WINNIPEG, MB

2 X ROTARY PRESS 3(4)-900/4000CVP

CONTROL PANEL
ANALOG INPUTS – MODULE 3

No Projet / Project No.	No Dessin/ Drawing No.	Revision
2023-11911	D - 23-8460 - 216	0.0

FQF-076R2 (171020)

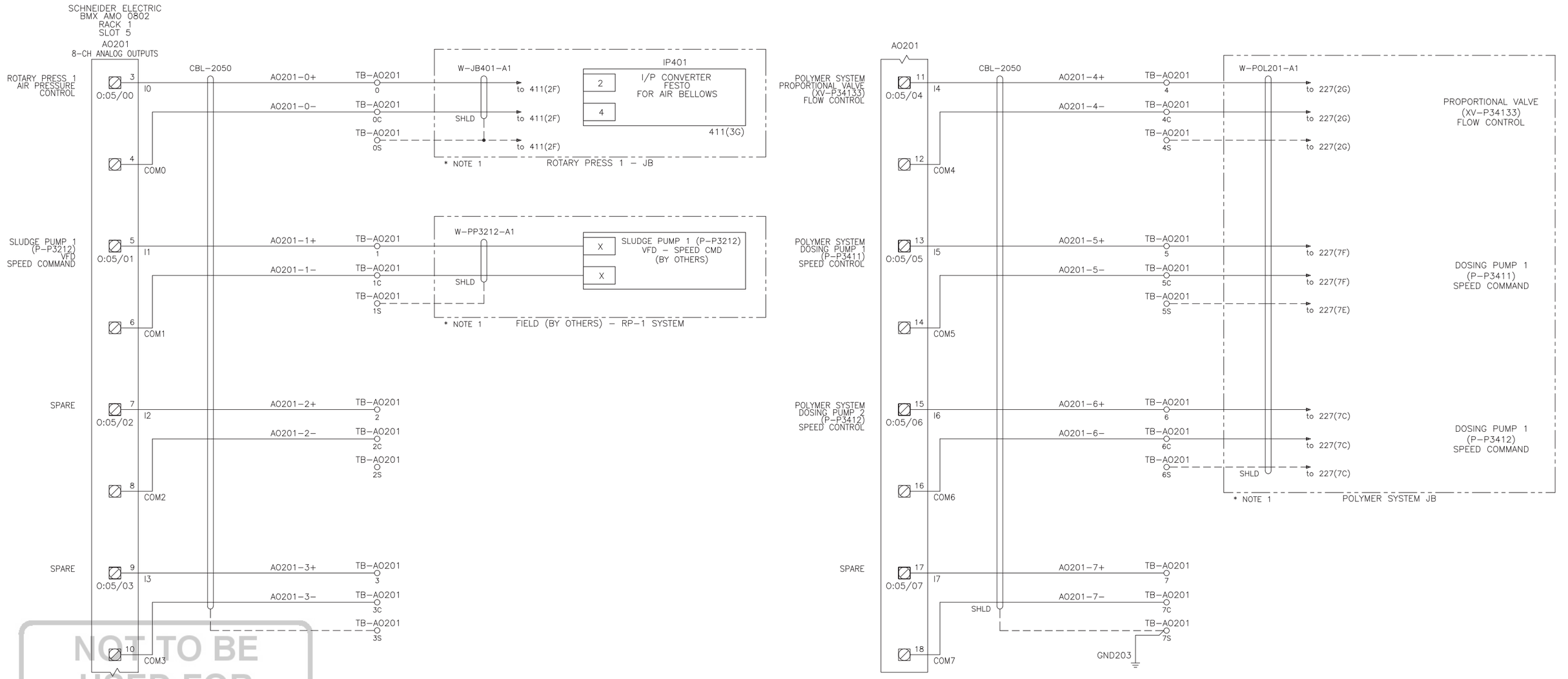

NOT TO BE USED FOR INSTALLATION

USE REV 2.X
(FOR CONSTRUCTION)

Notes générales / General notes

NOTE 1:
CABLE SHIELDING MUST STAY UNCONNECTED ON FIELD SIDE.

Rev.	Description	Date	Dessiné / Drawn
0.0	FOR APPROVAL	04/07/2023	D. MARTEL

LES INDUSTRIES FOURNIER INC.
FOURNIER INDUSTRIES INC.
3787 BOUL. FRONTENAC OUEST
THETFORD MINES, QUÉBEC, CANADA, G6H 2B5

CE DESSIN ET TOUTES LES INFORMATIONS QU'IL CONTIENT SONT LA PROPRIÉTÉ EXCLUSIVE DE LES INDUSTRIES FOURNIER INC. IL EST STRICTEMENT INTERDIT DE COMMUNIQUER OU UTILISER SON CONTENU À D'AUTRES FINS QUE CELLES PERMISES ORIGINALEMENT OU POUVANT ÊTRE PRÉJUDICIABLES AUX INTÉRÊTS DE LES INDUSTRIES FOURNIER INC. TOUTE REPRODUCTION DE CE DESSIN EST INTERDITE ET IL DOIT ÊTRE RETOURNÉ SUR DEMANDE.

THIS DRAWING AND ALL THE INFORMATION IT CONTAINS ARE THE EXCLUSIVE PROPERTY OF FOURNIER INDUSTRIES INC. IT IS STRICTLY FORBIDDEN TO COMMUNICATE OR USE THE INFORMATION FOR PURPOSES OTHER THAN THE ORIGINAL INTENDED ONES OR IF THE USE COULD BE HARMFUL TO THE INTERESTS OF FOURNIER INDUSTRIES INC. THIS DRAWING IN WHOLE OR IN PART MAY NOT BE REPRODUCED IN ANY FASHION AND HAS TO BE RETURNED TO FOURNIER INDUSTRIES INC. UPON REQUEST.

Sceau / Stamp

Créer par / Created by	D. MARTEL
Vérifié / Checked	G. ARCAND
Approuvé / Approuved	M.-A. TURGEON
Date de création / Creation date	16/06/2023
Échelle / Scale	

WINNIPEG, MB
2 X ROTARY PRESS 3(4)-900/4000CVP

CONTROL PANEL
ANALOG OUTPUTS - MODULE 1

No Projet / Project No.	No Dessin/ Drawing No.	Revision
2023-11911	D- 23-8460 - 217	0.0

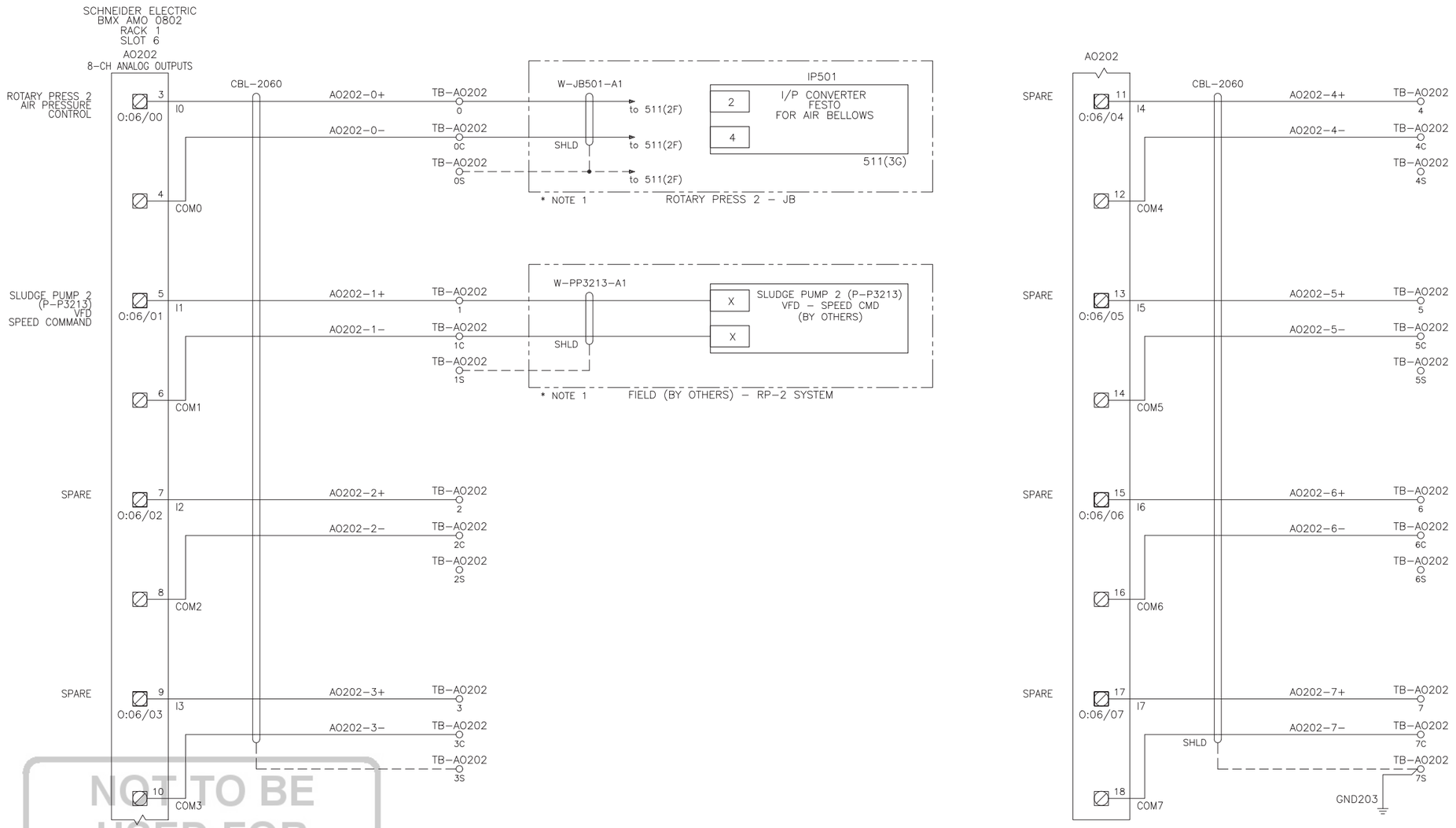

NOT TO BE USED FOR INSTALLATION

USE REV 2.X
(FOR CONSTRUCTION)

Notes générales / General notes

NOTE 1:
CABLE SHIELDING MUST STAY UNCONNECTED ON FIELD SIDE.

Rev.	Description	Date	Dessiné / Drawn
0.0	FOR APPROVAL	04/07/2023	D. MARTEL

LES INDUSTRIES FOURNIER INC.
FOURNIER INDUSTRIES INC.
3787 BOUL. FRONTENAC OUEST
THETFORD MINES, QUÉBEC, CANADA, G6H 2B5

CE DESSIN ET TOUTES LES INFORMATIONS QU'IL CONTIENT SONT LA PROPRIÉTÉ EXCLUSIVE DE LES INDUSTRIES FOURNIER INC. IL EST STRICTEMENT INTERDIT DE COMMUNIQUER OU UTILISER SON CONTENU À D'AUTRES FINS QUE CELLES PERMISES ORIGINALEMENT OU POUVANT ÊTRE PRÉJUDICIABLES AUX INTÉRÊTS DE LES INDUSTRIES FOURNIER INC. TOUTE REPRODUCTION DE CE DESSIN EST INTERDITE ET IL DOIT ÊTRE RETOURNÉ SUR DEMANDE.

THIS DRAWING AND ALL THE INFORMATION IT CONTAINS ARE THE EXCLUSIVE PROPERTY OF FOURNIER INDUSTRIES INC. IT IS STRICTLY FORBIDDEN TO COMMUNICATE OR USE THE INFORMATION FOR PURPOSES OTHER THAN THE ORIGINAL INTENDED ONES OR IF THE USE COULD BE HARMFUL TO THE INTERESTS OF FOURNIER INDUSTRIES INC. THIS DRAWING IN WHOLE OR IN PART MAY NOT BE REPRODUCED IN ANY FASHION AND HAS TO BE RETURNED TO FOURNIER INDUSTRIES INC. UPON REQUEST.

Sceau / Stamp

Créer par / Created by	D. MARTEL
Vérifié / Checked	G. ARCAND
Approuvé / Approuved	M.-A. TURGEON
Date de création / Creation date	16/06/2023
Échelle / Scale	

WINNIPEG, MB
2 X ROTARY PRESS 3(4)-900/4000CVP

CONTROL PANEL
ANALOG OUTPUTS - MODULE 2

No Projet / Project No.	No Dessin/ Drawing No.	Revision
2023-11911	D- 23-8460 - 218	0.0

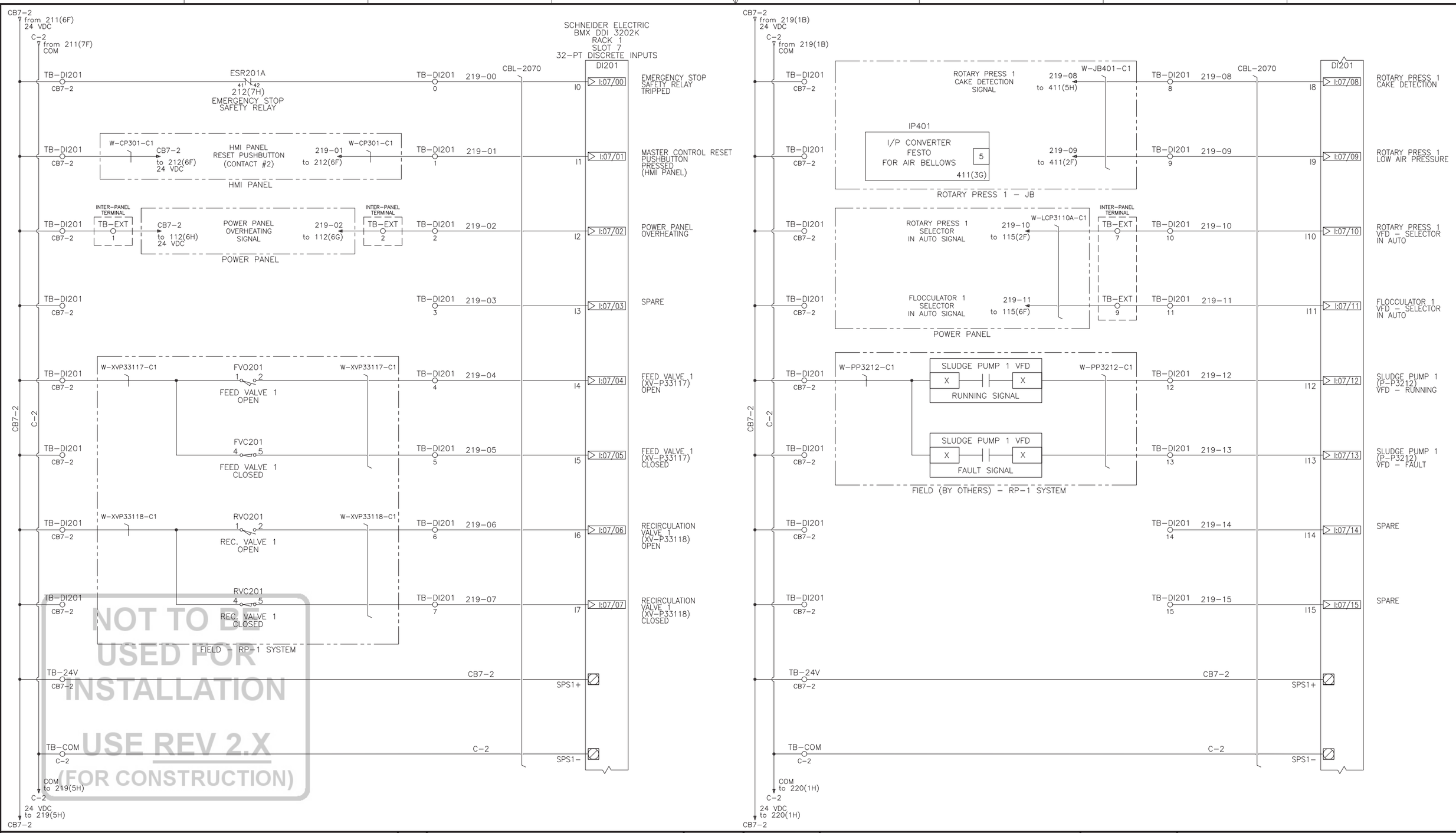

NOT TO BE USED FOR INSTALLATION
USE REV 2.X
(FOR CONSTRUCTION)

Notes générales / General notes

NOTE 1:

TEMPERATURE SWITCH (TSH101)
ADJUSTED AT 45°C/113°F

Rev.	Description	Date	Dessiné / Drawn
0.0	FOR APPROVAL	04/07/2023	D. MARTEL

LES INDUSTRIES FOURNIER INC.
FOURNIER INDUSTRIES INC.
3787 BOUL. FRONTENAC OUEST
THETFORD MINES, QUÉBEC, CANADA, G6H 2B5

CE DESSIN ET TOUTES LES INFORMATIONS QU'IL CONTIENT SONT LA PROPRIÉTÉ EXCLUSIVE DE LES INDUSTRIES FOURNIER INC. IL EST STRICTEMENT INTERDIT DE COMMUNIQUER OU UTILISER SON CONTENU À D'AUTRES FINS QUE CELLES PERMISES ORIGINALEMENT OU POUVANT ÊTRE PRÉJUDICIABLES AUX INTÉRÊTS DE LES INDUSTRIES FOURNIER INC. TOUTE REPRODUCTION DE CE DESSIN EST INTERDITE ET IL DOIT ÊTRE RETOURNÉ SUR DEMANDE.

THIS DRAWING AND ALL THE INFORMATION IT CONTAINS ARE THE EXCLUSIVE PROPERTY OF FOURNIER INDUSTRIES INC. IT IS STRICTLY FORBIDDEN TO COMMUNICATE OR USE THE INFORMATION FOR PURPOSES OTHER THAN THE ORIGINAL INTENDED ONES OR IF THE USE COULD BE HARMFUL TO THE INTERESTS OF FOURNIER INDUSTRIES INC. THIS DRAWING IN WHOLE OR IN PART MAY NOT BE REPRODUCED IN ANY FASHION AND HAS TO BE RETURNED TO FOURNIER INDUSTRIES INC. UPON REQUEST.

Sceau / Stamp

Créer par / Created by	D. MARTEL
Vérifié / Checked	G. ARCAND
Approuvé / Approuved	M.-A. TURGEON
Date de création / Creation date	16/06/2023
Échelle / Scale	

WINNIPEG, MB
2 X ROTARY PRESS 3(4)-900/4000CVP

CONTROL PANEL
DISCRETE INPUTS - MODULE 1 - (1 OF 2)

No Projet / Project No.	No Dessin/ Drawing No.	Revision
2023-11911	D- 23-8460 - 219	0.0

FQF-076R2 (171020)

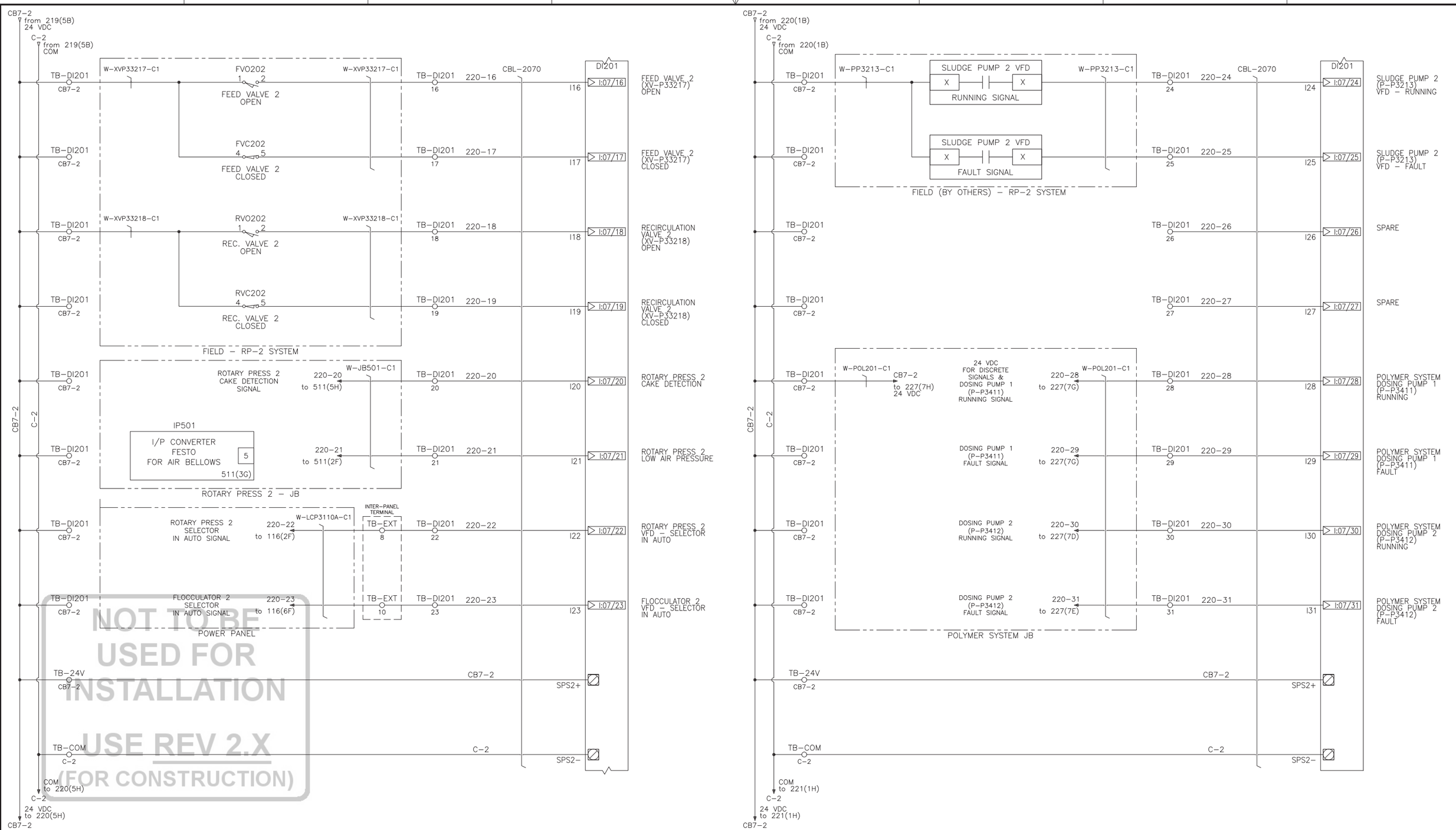

Notes générales / General notes

Rev.	Description	Date	Dessiné / Drawn
0.0	FOR APPROVAL	04/07/2023	D. MARTEL

LES INDUSTRIES FOURNIER INC.
FOURNIER INDUSTRIES INC.
3787 BOUL. FRONTENAC OUEST
THETFORD MINES, QUÉBEC, CANADA, G6H 2B5

CE DESSIN ET TOUTES LES INFORMATIONS QU'IL CONTIENT SONT LA PROPRIÉTÉ EXCLUSIVE DE LES INDUSTRIES FOURNIER INC. IL EST STRICTEMENT INTERDIT DE COMMUNIQUER OU UTILISER SON CONTENU À D'AUTRES FINS QUE CELLES PERMISES ORIGINALEMENT OU POUVANT ÊTRE PRÉJUDICIABLES AUX INTÉRÊTS DE LES INDUSTRIES FOURNIER INC. TOUTE REPRODUCTION DE CE DESSIN EST INTERDITE ET IL DOIT ÊTRE RETOURNÉ SUR DEMANDE.

THIS DRAWING AND ALL THE INFORMATION IT CONTAINS ARE THE EXCLUSIVE PROPERTY OF FOURNIER INDUSTRIES INC. IT IS STRICTLY FORBIDDEN TO COMMUNICATE OR USE THE INFORMATION FOR PURPOSES OTHER THAN THE ORIGINAL INTENDED ONES OR IF THE USE COULD BE HARMFUL TO THE INTERESTS OF FOURNIER INDUSTRIES INC. THIS DRAWING IN WHOLE OR IN PART MAY NOT BE REPRODUCED IN ANY FASHION AND HAS TO BE RETURNED TO FOURNIER INDUSTRIES INC. UPON REQUEST.

Sceau / Stamp

Créer par / Created by	D. MARTEL
Vérifié / Checked	G. ARCAND
Approuvé / Approuved	M.-A. TURGEON
Date de création / Creation date	16/06/2023
Échelle / Scale	

WINNIPEG, MB

2 X ROTARY PRESS 3(4)-900/4000CVP

CONTROL PANEL
DISCRETE INPUTS - MODULE 1 - (2 OF 2)

No Projet / Project No.	No Dessin/ Drawing No.	Revision
2023-11911	D- 23-8460 - 220	0.0

FQF-076R2 (171020)

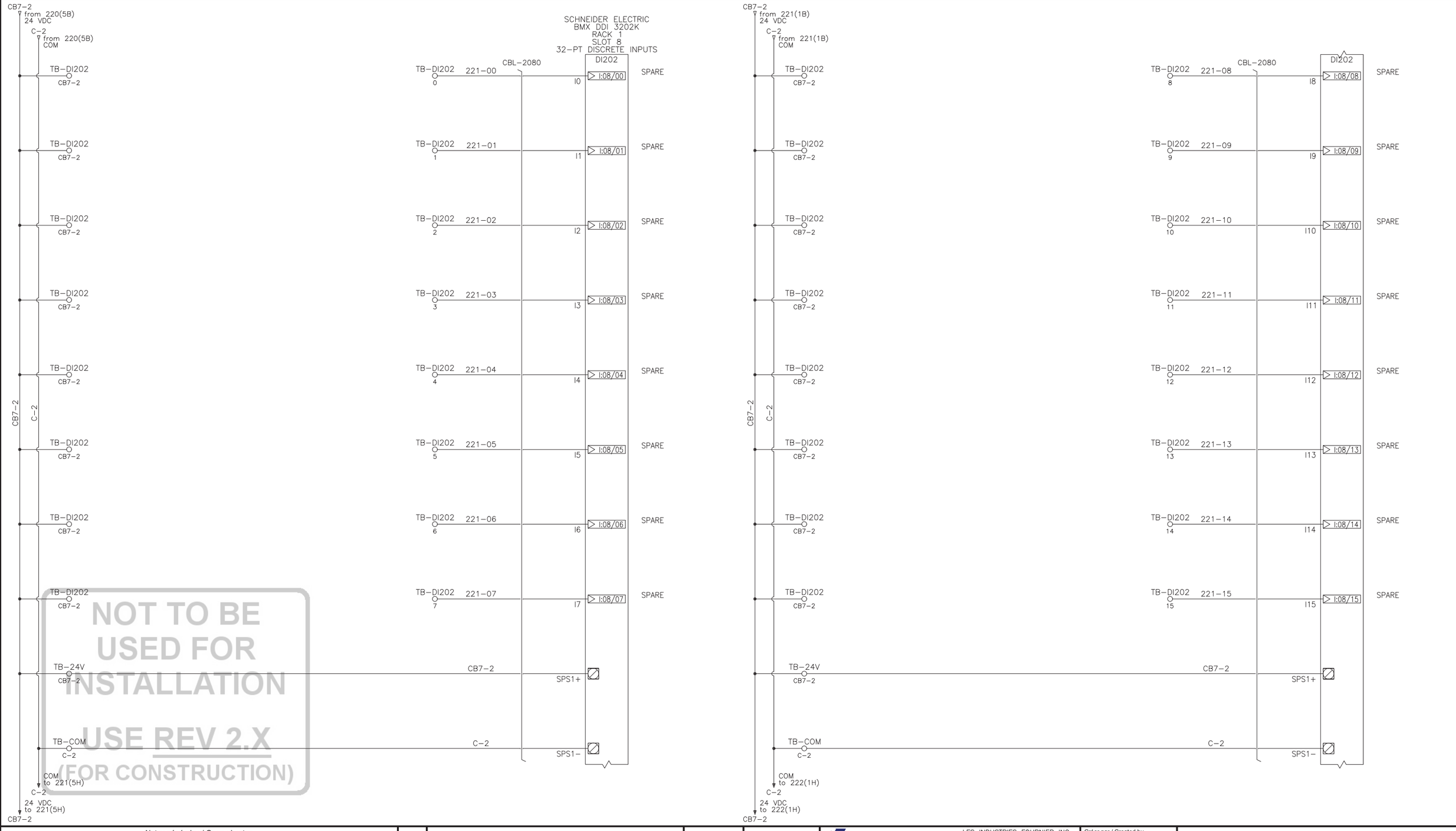

NOT TO BE USED FOR INSTALLATION

USE REV 2.X
(FOR CONSTRUCTION)

Notes générales / General notes

Rev.	Description	Date	Dessiné / Drawn
0.0	FOR APPROVAL	04/07/2023	D. MARTEL

LES INDUSTRIES FOURNIER INC.
FOURNIER INDUSTRIES INC.
3787 BOUL. FRONTENAC OUEST
THETFORD MINES, QUÉBEC, CANADA, G6H 2B5

CE DESSIN ET TOUTES LES INFORMATIONS QU'IL CONTIENT SONT LA PROPRIÉTÉ EXCLUSIVE DE LES INDUSTRIES FOURNIER INC. IL EST STRICTEMENT INTERDIT DE COMMUNIQUER OU UTILISER SON CONTENU À D'AUTRES FINS QUE CELLES PERMISES ORIGINALEMENT OU POUVANT ÊTRE PRÉJUDICIABLES AUX INTÉRÊTS DE LES INDUSTRIES FOURNIER INC. TOUTE REPRODUCTION DE CE DESSIN EST INTERDITE ET IL DOIT ÊTRE RETOURNÉ SUR DEMANDE.

THIS DRAWING AND ALL THE INFORMATION IT CONTAINS ARE THE EXCLUSIVE PROPERTY OF FOURNIER INDUSTRIES INC. IT IS STRICTLY FORBIDDEN TO COMMUNICATE OR USE THE INFORMATION FOR PURPOSES OTHER THAN THE ORIGINAL INTENDED ONES OR IF THE USE COULD BE HARMFUL TO THE INTERESTS OF FOURNIER INDUSTRIES INC. THIS DRAWING IN WHOLE OR IN PART MAY NOT BE REPRODUCED IN ANY FASHION AND HAS TO BE RETURNED TO FOURNIER INDUSTRIES INC. UPON REQUEST.

Sceau / Stamp

Créer par / Created by	D. MARTEL
Vérifié / Checked	G. ARCAND
Approuvé / Approuved	M.-A. TURGEON
Date de création / Creation date	16/06/2023
Échelle / Scale	

WINNIPEG, MB

2 X ROTARY PRESS 3(4)-900/4000CVP

CONTROL PANEL
DISCRETE INPUTS – MODULE 2 – (1 OF 2)

No Projet / Project No.	No Dessin/ Drawing No.	Revision
2023-11911	D - 23-8460 - 221	0.0

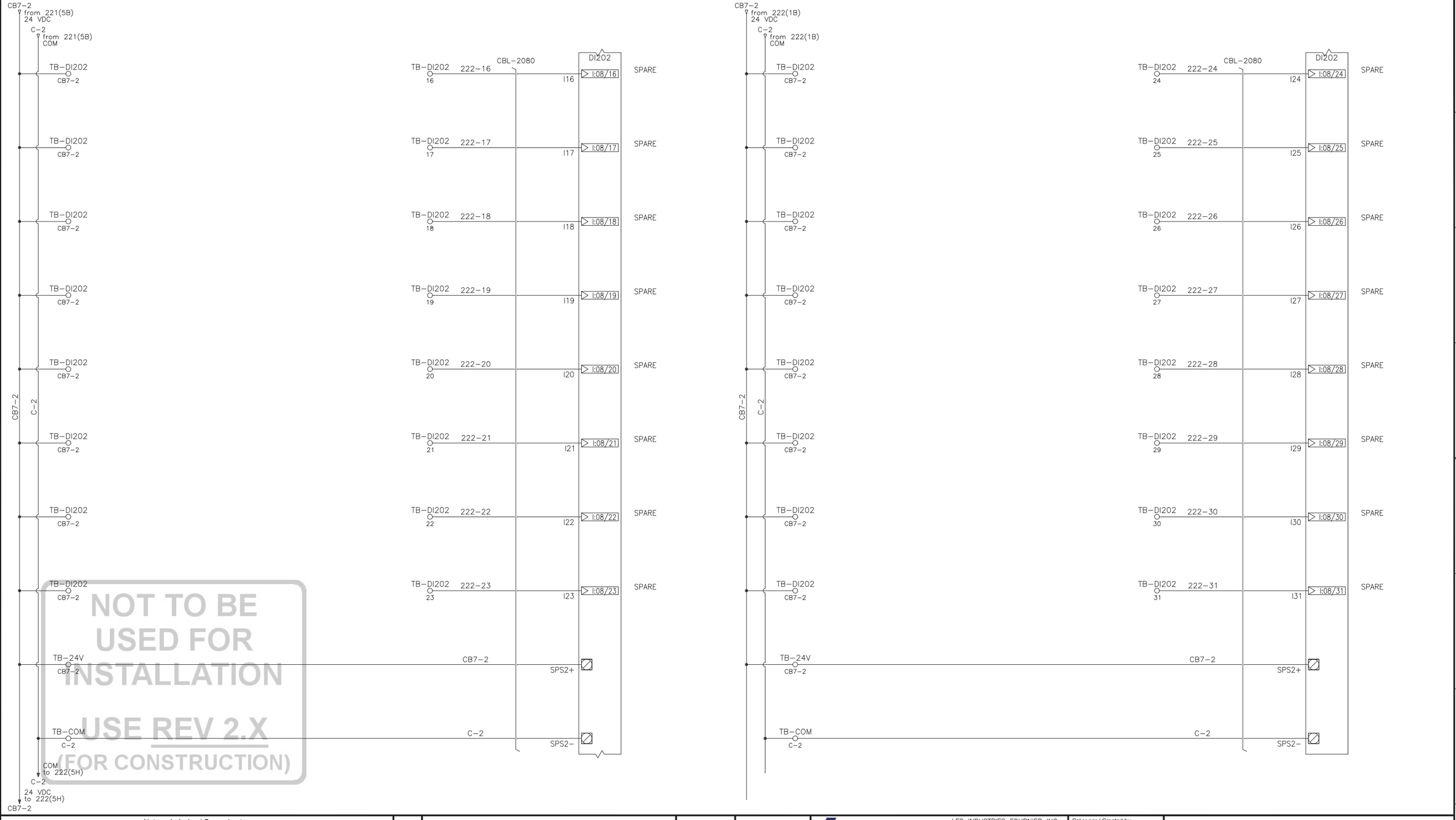

NOT TO BE USED FOR INSTALLATION

USE REV 2.X
(FOR CONSTRUCTION)

Notes générales / General notes

Rev.	Description	Date	Dessiné / Drawn
0.0	FOR APPROVAL	04/07/2023	D. MARTEL

LES INDUSTRIES FOURNIER INC.
FOURNIER INDUSTRIES INC.
3787 BOUL. FRONTENAC OUEST
THETFORD MINES, QUÉBEC, CANADA, G6H 2B5

CE DESSIN ET TOUTES LES INFORMATIONS QU'IL CONTIENT SONT LA PROPRIÉTÉ EXCLUSIVE DE LES INDUSTRIES FOURNIER INC. IL EST STRICTEMENT INTERDIT DE COMMUNIQUER OU UTILISER SON CONTENU À D'AUTRES FINS QUE CELLES PERMISES ORIGINALEMENT OU POUVANT ÊTRE PRÉJUDICIABLES AUX INTÉRÊTS DE LES INDUSTRIES FOURNIER INC. TOUTE REPRODUCTION DE CE DESSIN EST INTERDITE ET IL DOIT ÊTRE RETOURNÉ SUR DEMANDE.

THIS DRAWING AND ALL THE INFORMATION IT CONTAINS ARE THE EXCLUSIVE PROPERTY OF FOURNIER INDUSTRIES INC. IT IS STRICTLY FORBIDDEN TO COMMUNICATE OR USE THE INFORMATION FOR PURPOSES OTHER THAN THE ORIGINAL INTENDED ONES OR IF THE USE COULD BE HARMFUL TO THE INTERESTS OF FOURNIER INDUSTRIES INC. THIS DRAWING IN WHOLE OR IN PART MAY NOT BE REPRODUCED IN ANY FASHION AND HAS TO BE RETURNED TO FOURNIER INDUSTRIES INC. UPON REQUEST.

Sceau / Stamp

Créer par / Created by	D. MARTEL
Vérifié / Checked	G. ARCAND
Approuvé / Approuved	M.-A. TURGEON
Date de création / Creation date	16/06/2023
Échelle / Scale	

WINNIPEG, MB

2 X ROTARY PRESS 3(4)-900/4000CVP

CONTROL PANEL
DISCRETE INPUTS – MODULE 2 – (2 OF 2)

No Projet / Project No.	No Dessin/ Drawing No.	Revision
2023-11911	D - 23-8460 - 222	0.0

SCHNEIDER ELECTRIC
BMX DDO 1602
RACK 1
SLOT 9
16-PT DISCRETE OUTPUTS

DO201

CBL-2090

CB8-2 ▽ from 211(6F) 24 VDC

C-2 ▽ from 211(7F) COM

MASTER CONTROL RESET LIGHT MODULE ACTIVATE COMMAND (HMI PANEL) — 0:09/00 — Q0 — 223-00 — TB-DO201 0 — W-CP301-C1 — 223-00 to 310(2D) — RESET PUSHBUTTON LIGHT MODULE

GENERAL FAULT LIGHT MODULE ACTIVATE COMMAND (HMI PANEL) — 0:09/01 — Q1 — 223-01 — TB-DO201 1 — 223-01 to 310(2F) — GENERAL FAULT LIGHT MODULE

MAINTENANCE LIGHT MODULE ACTIVATE COMMAND (HMI PANEL) — 0:09/02 — Q2 — 223-02 — TB-DO201 2 — 223-02 to 310(2E) — MAINTENANCE LIGHT MODULE

HMI PANEL

ROTARY PRESS 1 FEED/REC. VALVE (XV-P33117/8) OPEN COMMAND — 0:09/03 — Q3 — 223-03 — CR201 (A1/A2) ROTARY PRESS 1 FEED/REC. VALVE OPEN COMMAND — NO 225(1H) / NC

ROTARY PRESS 1 WASH VALVE 1 (XV-P33121) (FUTURE) OPEN COMMAND — 0:09/04 — Q4 — 223-04 — CR202 (A1/A2) ROTARY PRESS 1 WASH VALVE 1 OPEN COMMAND — NO 225(1G) / NC

ROTARY PRESS 1 WASH VALVE 2 (XV-P33123) OPEN COMMAND — 0:09/05 — Q5 — 223-05 — CR203 (A1/A2) ROTARY PRESS 1 WASH VALVE 2 OPEN COMMAND — NO 225(1G) / NC

ROTARY PRESS 1 WASH VALVE 3 (XV-P33125) OPEN COMMAND — 0:09/06 — Q6 — 223-06 — CR204 (A1/A2) ROTARY PRESS 1 WASH VALVE 3 OPEN COMMAND — NO 225(1F) / NC

ROTARY PRESS 1 WASH VALVE 4 (XV-P33127) OPEN COMMAND — 0:09/07 — Q7 — 223-07 — CR205 (A1/A2) ROTARY PRESS 1 WASH VALVE 4 OPEN COMMAND — NO 225(1F) / NC

PPS1+ — CB8-2 — TB-24V CB8-2

PPS1- — C-2 — TB-COM C-2

COM to 223(8H) C-2

24 VDC to 223(8H) CB8-2

NOT TO BE USED FOR INSTALLATION

USE REV 2.X (FOR CONSTRUCTION)

DO201

CBL-2090

CB8-2 ▽ from 223(4B) 24 VDC

C-2 ▽ from 223(4B) COM

ROTARY PRESS 2 FEED/REC. VALVE (XV-P33217/8) OPEN COMMAND — 0:09/08 — Q8 — 223-08 — CR206 (A1/A2) ROTARY PRESS 2 FEED/REC. VALVE OPEN COMMAND — NO 225(5H) / NC

ROTARY PRESS 2 WASH VALVE 1 (XV-P33221) OPEN COMMAND — 0:09/09 — Q9 — 223-09 — CR207 (A1/A2) ROTARY PRESS 2 WASH VALVE 1 OPEN COMMAND — NO 225(5G) / NC

ROTARY PRESS 2 WASH VALVE 2 (XV-P33223) OPEN COMMAND — 0:09/10 — Q10 — 223-10 — CR208 (A1/A2) ROTARY PRESS 2 WASH VALVE 2 OPEN COMMAND — NO 225(5G) / NC

ROTARY PRESS 2 WASH VALVE 3 (XV-P33225) OPEN COMMAND — 0:09/11 — Q11 — 223-11 — CR209 (A1/A2) ROTARY PRESS 2 WASH VALVE 3 OPEN COMMAND — NO 225(5F) / NC

ROTARY PRESS 2 WASH VALVE 4 (XV-P33227) (FUTURE) OPEN COMMAND — 0:09/12 — Q12 — 223-12 — CR210 (A1/A2) ROTARY PRESS 2 WASH VALVE 4 OPEN COMMAND — NO 225(5F) / NC

SLUDGE PUMP 1 (P-P3212) VFD RUN COMMAND — 0:09/13 — Q13 — 223-13 — CR211 (A1/A2) SLUDGE PUMP 1 – VFD RUN COMMAND — NO 226(2H) / NC

SLUDGE PUMP 2 (P-P3213) VFD RUN COMMAND — 0:09/14 — Q14 — 223-14 — CR212 (A1/A2) SLUDGE PUMP 2 – VFD RUN COMMAND — NO 226(2G) / NC

POLYMER SYSTEM DOSING PUMP 1 RUN COMMAND — 0:09/15 — Q15 — 223-15 — CR213 (A1/A2) POLYMER SYSTEM DOSING PUMP 1 RUN COMMAND — NO 226(6H) / NC

PPS1+ — CB8-2 — TB-24V CB8-2

PPS1- — C-2 — TB-COM C-2

COM to 224(4H) C-2

24 VDC to 224(4H) CB8-2

Notes générales / General notes

Rev.	Description	Date	Dessiné / Drawn
0.0	FOR APPROVAL	04/07/2023	D. MARTEL

LES INDUSTRIES FOURNIER INC.
FOURNIER INDUSTRIES INC.
3787 BOUL. FRONTENAC OUEST
THETFORD MINES, QUÉBEC, CANADA, G6H 2B5

CE DESSIN ET TOUTES LES INFORMATIONS QU'IL CONTIENT SONT LA PROPRIÉTÉ EXCLUSIVE DE LES INDUSTRIES FOURNIER INC. IL EST STRICTEMENT INTERDIT DE COMMUNIQUER OU UTILISER SON CONTENU À D'AUTRES FINS QUE CELLES PERMISES ORIGINALEMENT OU POUVANT ÊTRE PRÉJUDICIABLES AUX INTÉRÊTS DE LES INDUSTRIES FOURNIER INC. TOUTE REPRODUCTION DE CE DESSIN EST INTERDITE ET IL DOIT ÊTRE RETOURNÉ SUR DEMANDE.

THIS DRAWING AND ALL THE INFORMATION IT CONTAINS ARE THE EXCLUSIVE PROPERTY OF FOURNIER INDUSTRIES INC. IT IS STRICTLY FORBIDDEN TO COMMUNICATE OR USE THE INFORMATION FOR PURPOSES OTHER THAN THE ORIGINAL INTENDED ONES OR IF THE USE COULD BE HARMFUL TO THE INTERESTS OF FOURNIER INDUSTRIES INC. THIS DRAWING IN WHOLE OR IN PART MAY NOT BE REPRODUCED IN ANY FASHION AND HAS TO BE RETURNED TO FOURNIER INDUSTRIES INC. UPON REQUEST.

Sceau / Stamp

Créer par / Created by	D. MARTEL
Vérifié / Checked	G. ARCAND
Approuvé / Approuved	M.-A. TURGEON
Date de création / Creation date	16/06/2023
Échelle / Scale	

WINNIPEG, MB

2 X ROTARY PRESS 3(4)-900/4000CVP

CONTROL PANEL
DISCRETE OUTPUTS – MODULE 1

No Projet / Project No.	No Dessin/ Drawing No.	Revision
2023-11911	D - 23-8460 - 223	0.0

SCHNEIDER ELECTRIC
BMX DDO 1602
RACK 1
SLOT 10
16-PT DISCRETE OUTPUTS

DO202

CBL-2100

CB8-2
from 223(8B)
24 VDC

C-2
from 223(8B)
COM

POLYMER SYSTEM DOSING PUMP 2 RUN COMMAND	0:10/00	Q0	224-00	CR214 A1 A2 POLYMER SYSTEM DOSING PUMP 2 RUN COMMAND	NO 226(6G)	
					NC	
SPARE	0:10/01	Q1	224-01	CR215 A1 A2 SPARE	NO	
					NC	
SPARE	0:10/02	Q2	224-02	CR216 A1 A2 SPARE	NO	
					NC	
SPARE	0:10/03	Q3	224-03	TB-DO202 3		
SPARE	0:10/04	Q4	224-04	TB-DO202 4		
SPARE	0:10/05	Q5	224-05	TB-DO202 5		
SPARE	0:10/06	Q6	224-06	TB-DO202 6		
SPARE	0:10/07	Q7	224-07	TB-DO202 7		
	PPS1+		CB8-2	TB-24V CB8-2		
	PPS1-		C-2	TB-COM C-2		

CB8-2 C-2

COM
to 224(8H)
C-2

24 VDC
to 224(8H)
CB8-2

DO202

CBL-2100

CB8-2
from 224(4B)
24 VDC

C-2
from 224(4B)
COM

SPARE	0:10/08	Q8	224-08	TB-DO202 8
SPARE	0:10/09	Q9	224-09	TB-DO202 9
SPARE	0:10/10	Q10	224-10	TB-DO202 10
SPARE	0:10/11	Q11	224-11	TB-DO202 11
SPARE	0:10/12	Q12	224-12	TB-DO202 12
SPARE	0:10/13	Q13	224-13	TB-DO202 13
SPARE	0:10/14	Q14	224-14	TB-DO202 14
SPARE	0:10/15	Q15	224-15	TB-DO202 15
	PPS1+		CB8-2	TB-24V CB8-2
	PPS1-		C-2	TB-COM C-2

CB8-2 C-2

NOT TO BE USED FOR INSTALLATION

USE REV 2.X
(FOR CONSTRUCTION)

Notes générales / General notes

Rev.	Description	Date	Dessiné / Drawn
0.0	FOR APPROVAL	04/07/2023	D. MARTEL

CE DESSIN ET TOUTES LES INFORMATIONS QU'IL CONTIENT SONT LA PROPRIÉTÉ EXCLUSIVE DE LES INDUSTRIES FOURNIER INC. IL EST STRICTEMENT INTERDIT DE COMMUNIQUER OU UTILISER SON CONTENU À D'AUTRES FINS QUE CELLES PERMISES ORIGINALEMENT OU POUVANT ÊTRE PRÉJUDICIABLES AUX INTÉRÊTS DE LES INDUSTRIES FOURNIER INC. TOUTE REPRODUCTION DE CE DESSIN EST INTERDITE ET IL DOIT ÊTRE RETOURNÉ SUR DEMANDE.

THIS DRAWING AND ALL THE INFORMATION IT CONTAINS ARE THE EXCLUSIVE PROPERTY OF FOURNIER INDUSTRIES INC. IT IS STRICTLY FORBIDDEN TO COMMUNICATE OR USE THE INFORMATION FOR PURPOSES OTHER THAN THE ORIGINAL INTENDED ONES OR IF THE USE COULD BE HARMFUL TO THE INTERESTS OF FOURNIER INDUSTRIES INC. THIS DRAWING IN WHOLE OR IN PART MAY NOT BE REPRODUCED IN ANY FASHION AND HAS TO BE RETURNED TO FOURNIER INDUSTRIES INC. UPON REQUEST.

LES INDUSTRIES FOURNIER INC.
FOURNIER INDUSTRIES INC.
3787 BOUL. FRONTENAC OUEST
THETFORD MINES, QUÉBEC, CANADA, G6H 2B5

Sceau / Stamp

Créer par / Created by	D. MARTEL
Vérifié / Checked	G. ARCAND
Approuvé / Approuved	M.-A. TURGEON
Date de création / Creation date	16/06/2023
Échelle / Scale	

WINNIPEG, MB
2 X ROTARY PRESS 3(4)-900/4000CVP

CONTROL PANEL
DISCRETE OUTPUTS – MODULE 2

No Projet / Project No.	No Dessin/ Drawing No.	Revision
2023-11911	D - 23-8460 - 224	0.0

ESR1
from 211(6E)
24 VDC – ESR1

CR201 11 14 223(3F) ROTARY PRESS 1 FEED/REC. VALVE OPEN COMMAND	225–00	TB–INTER 150	W–JB401–C1	225–00 to 411(2D)	FEED/REC. VALVE (XV–P33117/8) OPEN COMMMAND
CR202 11 14 223(3E) ROTARY PRESS 1 WASH VALVE 1 OPEN COMMAND	225–01	TB–INTER 101		225–01 to 411(2E)	WASH VALVE 1 (FUTURE) (XV–P33121) OPEN COMMMAND
CR203 11 14 223(3E) ROTARY PRESS 1 WASH VALVE 2 OPEN COMMAND	225–02	TB–INTER 102		225–02 to 411(2E)	WASH VALVE 2 (XV–P33123) OPEN COMMMAND
CR204 11 14 223(3D) ROTARY PRESS 1 WASH VALVE 3 OPEN COMMAND	225–03	TB–INTER 103		225–03 to 411(2D)	WASH VALVE 3 (XV–P33125) OPEN COMMMAND
CR205 11 14 223(3C) ROTARY PRESS 1 WASH VALVE 4 OPEN COMMAND	225–04	TB–INTER 104		225–04 to 411(2D)	WASH VALVE 4 (XV–P33127) OPEN COMMMAND

ROTARY PRESS 1 – JB

ESR1

NOT TO BE USED FOR INSTALLATION

USE REV 2.X
(FOR CONSTRUCTION)

24 VDC – ESR1
to 225(5H)
ESR1

ESR1
from 225(1B)
24 VDC – ESR1

CR206 11 14 223(7H) ROTARY PRESS 2 FEED/REC. VALVE OPEN COMMAND	225–100	TB–INTER 250	W–JB501–C1	225–100 to 511(2D)	FEED/REC. VALVE (XV–P33217/8) OPEN COMMMAND
CR207 11 14 223(7G) ROTARY PRESS 2 WASH VALVE 1 OPEN COMMAND	225–101	TB–INTER 201		225–101 to 511(2E)	WASH VALVE 1 (XV–P33221) OPEN COMMMAND
CR208 11 14 223(7G) ROTARY PRESS 2 WASH VALVE 2 OPEN COMMAND	225–102	TB–INTER 202		225–102 to 511(2E)	WASH VALVE 2 (XV–P33223) OPEN COMMMAND
CR209 11 14 223(7F) ROTARY PRESS 2 WASH VALVE 3 OPEN COMMAND	225–103	TB–INTER 203		225–103 to 511(2D)	WASH VALVE 3 (XV–P33225) OPEN COMMMAND
CR210 11 14 223(7E) ROTARY PRESS 2 WASH VALVE 4 OPEN COMMAND	225–104	TB–INTER 204		225–104 to 511(2D)	WASH VALVE 4 (XV–P33227) (FUTURE) OPEN COMMMAND

ROTARY PRESS 2 – JB

ESR1

Notes générales / General notes

Rev.	Description	Date	Dessiné / Drawn
0.0	FOR APPROVAL	04/07/2023	D. MARTEL

CE DESSIN ET TOUTES LES INFORMATIONS QU'IL CONTIENT SONT LA PROPRIÉTÉ EXCLUSIVE DE LES INDUSTRIES FOURNIER INC. IL EST STRICTEMENT INTERDIT DE COMMUNIQUER OU UTILISER SON CONTENU À D'AUTRES FINS QUE CELLES PERMISES ORIGINALEMENT OU POUVANT ÊTRE PRÉJUDICIABLES AUX INTÉRÊTS DE LES INDUSTRIES FOURNIER INC. TOUTE REPRODUCTION DE CE DESSIN EST INTERDITE ET IL DOIT ÊTRE RETOURNÉ SUR DEMANDE.

THIS DRAWING AND ALL THE INFORMATION IT CONTAINS ARE THE EXCLUSIVE PROPERTY OF FOURNIER INDUSTRIES INC. IT IS STRICTLY FORBIDDEN TO COMMUNICATE OR USE THE INFORMATION FOR PURPOSES OTHER THAN THE ORIGINAL INTENDED ONES OR IF THE USE COULD BE HARMFUL TO THE INTERESTS OF FOURNIER INDUSTRIES INC. THIS DRAWING IN WHOLE OR IN PART MAY NOT BE REPRODUCED IN ANY FASHION AND HAS TO BE RETURNED TO FOURNIER INDUSTRIES INC. UPON REQUEST.

LES INDUSTRIES FOURNIER INC.
FOURNIER INDUSTRIES INC.
3787 BOUL. FRONTENAC OUEST
THETFORD MINES, QUÉBEC, CANADA, G6H 2B5

Sceau / Stamp

Créer par / Created by: D. MARTEL
Vérifié / Checked: G. ARCAND
Approuvé / Approuved: M.–A. TURGEON
Date de création / Creation date: 16/06/2023
Échelle / Scale:

WINNIPEG, MB
2 X ROTARY PRESS 3(4)–900/4000CVP

CONTROL PANEL
DISCRETE OUTPUTS – CONTACTS – (1 OF 2)

No Projet / Project No.	No Dessin/ Drawing No.	Revision
2023-11911	D - 23-8460 - 225	0.0

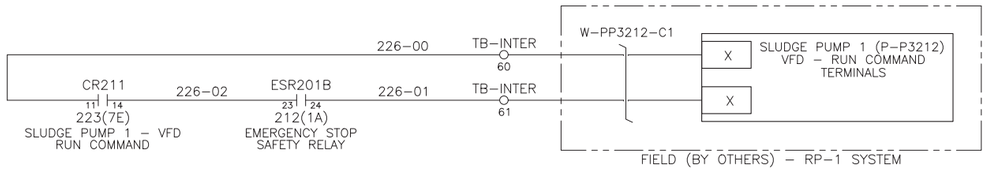

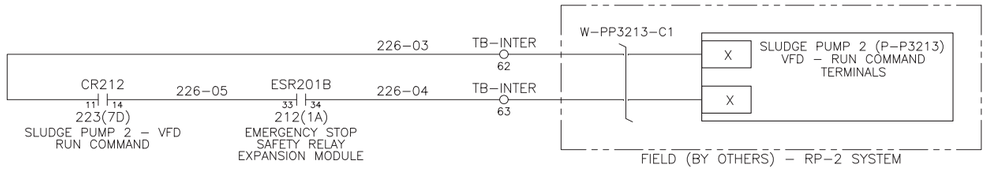

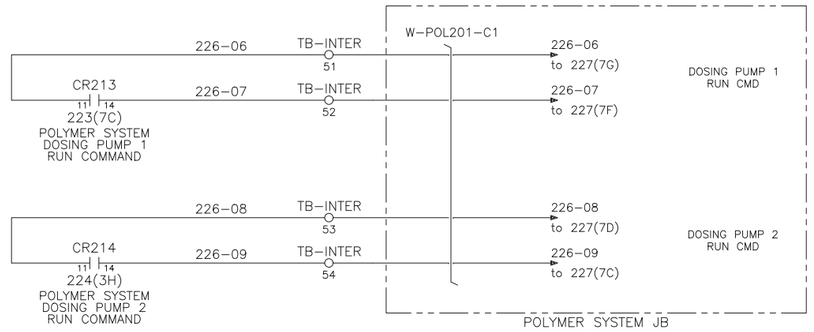

NOT TO BE
USED FOR
INSTALLATION

USE REV 2.X
(FOR CONSTRUCTION)

Notes générales / General notes

Rev.	Description	Date	Dessiné / Drawn
0.0	FOR APPROVAL	04/07/2023	D. MARTEL

LES INDUSTRIES FOURNIER INC.
FOURNIER INDUSTRIES INC.
3787 BOUL. FRONTENAC OUEST
THETFORD MINES, QUÉBEC, CANADA, G6H 2B5

CE DESSIN ET TOUTES LES INFORMATIONS QU'IL CONTIENT SONT LA PROPRIÉTÉ EXCLUSIVE DE LES INDUSTRIES FOURNIER INC. IL EST STRICTEMENT INTERDIT DE COMMUNIQUER OU UTILISER SON CONTENU À D'AUTRES FINS QUE CELLES PERMISES ORIGINALEMENT OU POUVANT ÊTRE PRÉJUDICIABLES AUX INTÉRÊTS DE LES INDUSTRIES FOURNIER INC. TOUTE REPRODUCTION DE CE DESSIN EST INTERDITE ET IL DOIT ÊTRE RETOURNÉ SUR DEMANDE.

THIS DRAWING AND ALL THE INFORMATION IT CONTAINS ARE THE EXCLUSIVE PROPERTY OF FOURNIER INDUSTRIES INC. IT IS STRICTLY FORBIDDEN TO COMMUNICATE OR USE THE INFORMATION FOR PURPOSES OTHER THAN THE ORIGINAL INTENDED ONES OR IF THE USE COULD BE HARMFUL TO THE INTERESTS OF FOURNIER INDUSTRIES INC. THIS DRAWING IN WHOLE OR IN PART MAY NOT BE REPRODUCED IN ANY FASHION AND HAS TO BE RETURNED TO FOURNIER INDUSTRIES INC. UPON REQUEST.

Sceau / Stamp

Créer par / Created by	D. MARTEL
Vérifié / Checked	G. ARCAND
Approuvé / Approuved	M.-A. TURGEON
Date de création / Creation date	16/06/2023
Échelle / Scale	

WINNIPEG, MB

2 X ROTARY PRESS 3(4)-900/4000CVP

CONTROL PANEL
DISCRETE OUTPUTS - CONTACTS - (2 OF 2)

No Projet / Project No.	No Dessin/ Drawing No.	Revision
2023-11911	D - 23-8460 - 226	0.0

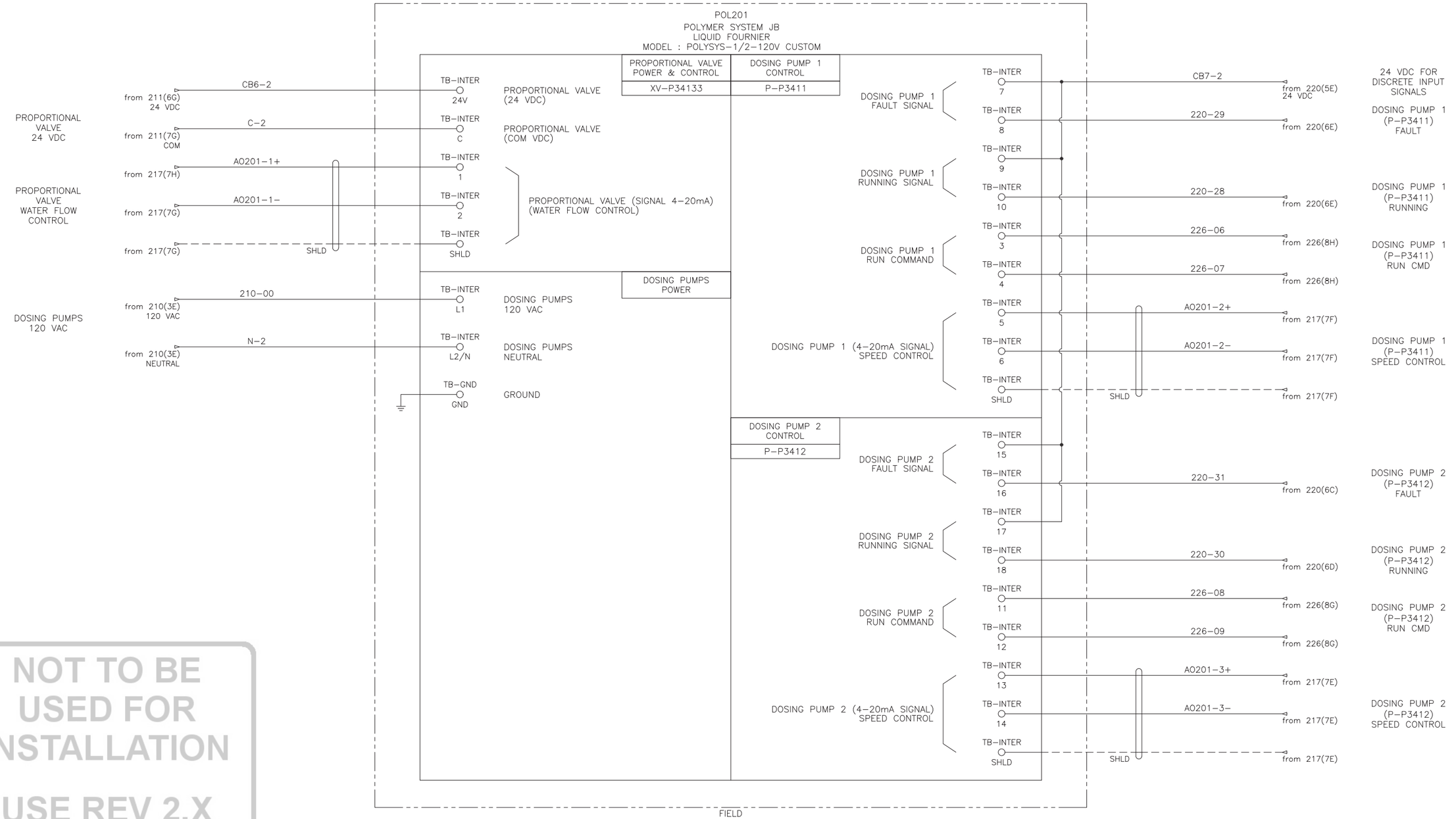

NOT TO BE USED FOR INSTALLATION

USE REV 2.X
(FOR CONSTRUCTION)

Notes générales / General notes

Rev.	Description	Date	Dessiné / Drawn
0.0	FOR APPROVAL	04/07/2023	D. MARTEL

LES INDUSTRIES FOURNIER INC.
FOURNIER INDUSTRIES INC.
3787 BOUL. FRONTENAC OUEST
THETFORD MINES, QUÉBEC, CANADA, G6H 2B5

CE DESSIN ET TOUTES LES INFORMATIONS QU'IL CONTIENT SONT LA PROPRIÉTÉ EXCLUSIVE DE LES INDUSTRIES FOURNIER INC. IL EST STRICTEMENT INTERDIT DE COMMUNIQUER OU UTILISER SON CONTENU À D'AUTRES FINS QUE CELLES PERMISES ORIGINALEMENT OU POUVANT ÊTRE PRÉJUDICIABLES AUX INTÉRÊTS DE LES INDUSTRIES FOURNIER INC. TOUTE REPRODUCTION DE CE DESSIN EST INTERDITE ET IL DOIT ÊTRE RETOURNÉ SUR DEMANDE.

THIS DRAWING AND ALL THE INFORMATION IT CONTAINS ARE THE EXCLUSIVE PROPERTY OF FOURNIER INDUSTRIES INC. IT IS STRICTLY FORBIDDEN TO COMMUNICATE OR USE THE INFORMATION FOR PURPOSES OTHER THAN THE ORIGINAL INTENDED ONES OR IF THE USE COULD BE HARMFUL TO THE INTERESTS OF FOURNIER INDUSTRIES INC. THIS DRAWING IN WHOLE OR IN PART MAY NOT BE REPRODUCED IN ANY FASHION AND HAS TO BE RETURNED TO FOURNIER INDUSTRIES INC. UPON REQUEST.

Sceau / Stamp

Créer par / Created by	D. MARTEL
Vérifié / Checked	G. ARCAND
Approuvé / Approuved	M.-A. TURGEON
Date de création / Creation date	16/06/2023
Échelle / Scale	

WINNIPEG, MB
2 X ROTARY PRESS 3(4)-900/4000CVP

CONTROL PANEL
POLYMER SYSTEM

No Projet / Project No.	No Dessin/ Drawing No.	Revision
2023-11911	D - 23-8460 - 227	0.0

FRONT VIEW

CP301

20"(H) x 20"(W) x 8"(D)
(508 x 508 x 203 mm)

fournier

OI301

EQUIPMENT FAULT

LT301

MASTER CONTROL RESET

MCR301

MAINTENANCE WARNING

LT302

EMERGENCY STOP
ARRÊT D'URGENCE
PUSH-TO-RESET
NOT-HALT

S301

20"
[508.0 MM]

20"
[508.0 MM]

NOT TO BE USED FOR INSTALLATION

USE REV 2.X
(FOR CONSTRUCTION)

BACKPLATE

BP301

TB-24V
24V
24V
TB-COM
C
C
TB-INTER
1
2
3
4
5
6
7
8
9
10
TB-GND
GND
GND

Notes générales / General notes

* IMPORTANT
FINAL DESIGN WILL BE ON
"FOR CONSTRUCTION" REVISION

Rev.	Description	Date	Dessiné / Drawn
0.0	FOR APPROVAL	04/07/2023	D. MARTEL

LES INDUSTRIES FOURNIER INC.
FOURNIER INDUSTRIES INC.
3787 BOUL. FRONTENAC OUEST
THETFORD MINES, QUÉBEC, CANADA, G6H 2B5

CE DESSIN ET TOUTES LES INFORMATIONS QU'IL CONTIENT SONT LA PROPRIÉTÉ EXCLUSIVE DE LES INDUSTRIES FOURNIER INC. IL EST STRICTEMENT INTERDIT DE COMMUNIQUER OU UTILISER SON CONTENU À D'AUTRES FINS QUE CELLES PERMISES ORIGINALEMENT OU POUVANT ÊTRE PRÉJUDICIABLES AUX INTÉRÊTS DE LES INDUSTRIES FOURNIER INC. TOUTE REPRODUCTION DE CE DESSIN EST INTERDITE ET IL DOIT ÊTRE RETOURNÉ SUR DEMANDE.

THIS DRAWING AND ALL THE INFORMATION IT CONTAINS ARE THE EXCLUSIVE PROPERTY OF FOURNIER INDUSTRIES INC. IT IS STRICTLY FORBIDDEN TO COMMUNICATE OR USE THE INFORMATION FOR PURPOSES OTHER THAN THE ORIGINAL INTENDED ONES OR IF THE USE COULD BE HARMFUL TO THE INTERESTS OF FOURNIER INDUSTRIES INC. THIS DRAWING IN WHOLE OR IN PART MAY NOT BE REPRODUCED IN ANY FASHION AND HAS TO BE RETURNED TO FOURNIER INDUSTRIES INC. UPON REQUEST.

Sceau / Stamp

Créer par / Created by	D. MARTEL
Vérifié / Checked	G. ARCAND
Approuvé / Approuved	M.-A. TURGEON
Date de création / Creation date	16/06/2023
Échelle / Scale	

WINNIPEG, MB

2 X ROTARY PRESS 3(4)-900/4000CVP

HMI PANEL
PANEL ARRANGEMENT

No Projet / Project No.	No Dessin/ Drawing No.	Revision
2023-11911	D - 23-8460 - 300	0.0

TAG	QTY	DESCRIPTION	CAT. NO.	CAT. NO. (FOURNIER)	MANUFACTURER
BP301	1	GALVANIZED BACK PLATE 20" X 20"	CP2020G		HOFFMAN
CP301	1	CONCEPT WALL-MOUNT ENCLOSURE (20" X 20" X 8"), NEMA 4, 12, 13, IP66	CSD20208		HOFFMAN
	1	CORROSION INHIBITOR, EMITTER FOR 5 CUBIC FOOT (25 PER PACKAGE)	AHCI5E	HOF-AHCI5EKE	HOFFMAN
	1	MOUNTING BRACKET KIT - TYPE 304 STAINLESS STEEL	CMFKSS		HOFFMAN
LT301	1	PLASTIC PILOT LIGHT, 22.5MM, FLUSH, ORANGE, IP66	800FP-P0		AB
	1	METAL LATCH FOR 800F OPERATOR	800F-ALM	ALL-800FALMKE	AB
	1	INTEGRATED LED - WHITE, 24V AC/DC	800F-N3W	ALL-800F-N3W	AB
LT302	1	PLASTIC PILOT LIGHT, 22.5MM, FLUSH, RED, IP66	800FP-P4		AB
	1	METAL LATCH FOR 800F OPERATOR	800F-ALM	ALL-800FALMKE	AB
	1	INTEGRATED LED - RED, 24V AC/DC	800F-N3R		AB
MCR301	1	PLASTIC ILLUMINATED PUSH BUTTON, 22.5MM, FLUSH, BLUE, MOMENTARY, IP66	800FP-LF6	ALL-800FP-LF6	AB
	1	METAL LATCH FOR 800F OPERATOR	800F-ALM	ALL-800FALMKE	AB
	2	SCREW CONTACT BLOCK 1 N.O FOR 22.5MM OPERATOR	800F-X10	ALL-800FX10KE	AB
	1	INTEGRATED LED - WHITE, 24V AC/DC	800F-N3W	ALL-800F-N3W	AB
OI301	1	MAGELIS GTO, COLOR OPERATOR INTERFACE, TOUCH, 10.4", 24VDC, ETHERNET, 96MB	HMIGTO5310		SCHNEIDER ELECTRIC
	1	SD CARD, MIN 16GB	TS2GSDC	MEM-CARTESDKE	TRANSCEND
S301	1	PLASTIC EMERGENCY STOP, 22.5MM, HEAD 40MM TWIST LOCK, RED, IP66	800FP-MT44	ALL-800FPMT44KE	AB
	1	METAL LATCH FOR 800F OPERATOR	800F-ALM	ALL-800FALMKE	AB
	1	SCREW CONTACT BLOCK 1 N.C FOR 22.5MM OPERATOR	800F-X01	ALL-800FX01KE	AB
	1	UNIVERSAL E-STOP LEGEND PLATE, 22.5MM, 3 LANGUAGES, YELLOW WITH BLACK MARKING	800F-15YSM112	ALL-800F15YSM112KE	AB
TB-24V	1	GROUP MARKER FOR END BRACKET CLIPFIX 35, HEIGHT-ADJUSTABLE, GRAY	0811969	PHO-0811969KE	PHOENIX CONTACT
	2	PT4, PUSH-IN TERMINAL, 1 LEVEL, 32A, GREY, 10-24 AWG	3211757	PHO-3211757KE	PHOENIX CONTACT
	1	PT4 PARTITION PLATE, GREY, (D-ST4)	3030420	PHO-3030420KE	PHOENIX CONTACT
TB-COM	1	GROUP MARKER FOR END BRACKET CLIPFIX 35, HEIGHT-ADJUSTABLE, GRAY	0811969	PHO-0811969KE	PHOENIX CONTACT
	2	PT4, PUSH-IN TERMINAL, 1 LEVEL, 32A, GREY, 10-24 AWG	3211757	PHO-3211757KE	PHOENIX CONTACT
	1	PT4 PARTITION PLATE, GREY, (D-ST4)	3030420	PHO-3030420KE	PHOENIX CONTACT
TB-GND	1	GROUP MARKER FOR END BRACKET CLIPFIX 35, HEIGHT-ADJUSTABLE, GRAY	0811969	PHO-0811969KE	PHOENIX CONTACT
	1	PT4 PARTITION PLATE, GREY, (D-ST4)	3030420	PHO-3030420KE	PHOENIX CONTACT
	2	PT4-PE, PUSH-IN TERMINAL, 1 LEVEL, GND, YELLOW/GREEN, 10-24 AWG	3211766	PHO-3211766KE	PHOENIX CONTACT
	1	END BRACKET, CLIPFIX 35, GREY	3022218	PHO-3022218KE	PHOENIX CONTACT
TB-INTER	1	GROUP MARKER FOR END BRACKET CLIPFIX 35, HEIGHT-ADJUSTABLE, GRAY	0811969	PHO-0811969KE	PHOENIX CONTACT
	10	PT4, PUSH-IN TERMINAL, 1 LEVEL, 32A, GREY, 10-24 AWG	3211757	PHO-3211757KE	PHOENIX CONTACT
	1	PT4 PARTITION PLATE, GREY, (D-ST4)	3030420	PHO-3030420KE	PHOENIX CONTACT

NOT TO BE USED FOR INSTALLATION

USE REV 2.X
(FOR CONSTRUCTION)

Notes générales / General notes

Rev.	Description	Date	Dessiné / Drawn
0.0	FOR APPROVAL	04/07/2023	D. MARTEL

LES INDUSTRIES FOURNIER INC.
FOURNIER INDUSTRIES INC.
3787 BOUL. FRONTENAC OUEST
THETFORD MINES, QUÉBEC, CANADA, G6H 2B5

CE DESSIN ET TOUTES LES INFORMATIONS QU'IL CONTIENT SONT LA PROPRIÉTÉ EXCLUSIVE DE LES INDUSTRIES FOURNIER INC. IL EST STRICTEMENT INTERDIT DE COMMUNIQUER OU UTILISER SON CONTENU À D'AUTRES FINS QUE CELLES PERMISES ORIGINALEMENT OU POUVANT ÊTRE PRÉJUDICIABLES AUX INTÉRÊTS DE LES INDUSTRIES FOURNIER INC. TOUTE REPRODUCTION DE CE DESSIN EST INTERDITE ET IL DOIT ÊTRE RETOURNÉ SUR DEMANDE.

THIS DRAWING AND ALL THE INFORMATION IT CONTAINS ARE THE EXCLUSIVE PROPERTY OF FOURNIER INDUSTRIES INC. IT IS STRICTLY FORBIDDEN TO COMMUNICATE OR USE THE INFORMATION FOR PURPOSES OTHER THAN THE ORIGINAL INTENDED ONES OR IF THE USE COULD BE HARMFUL TO THE INTERESTS OF FOURNIER INDUSTRIES INC.. THIS DRAWING IN WHOLE OR IN PART MAY NOT BE REPRODUCED IN ANY FASHION AND HAS TO BE RETURNED TO FOURNIER INDUSTRIES INC. UPON REQUEST.

Sceau / Stamp

Créer par / Created by	D. MARTEL
Vérifié / Checked	G. ARCAND
Approuvé / Approuved	M.-A. TURGEON
Date de création / Creation date	16/06/2023
Échelle / Scale	

WINNIPEG, MB
2 X ROTARY PRESS 3(4)-900/4000CVP

HMI PANEL
LIST OF MATERIAL

No Projet / Project No.	No Dessin/ Drawing No.	Revision
2023-11911	D - 23-8460 - 301	0.0

CB2-2
from 211(2D)
24 VDC

24 VDC
POWER SUPPLY

C-2
from 211(3D)
COM

CB2-2

C-2

SAFETY RELAY
INPUT LOOP

212-04 — TB-INTER 1 — from 212(4E)

EMERGENCY STOP
(HMI PANEL)
S301

212-05 — TB-INTER 2 — from 212(5E)

SAFETY RELAY
RESET LOOP
(CONTACT #1)

212-10 — TB-INTER 3 — from 212(4G)

MASTER CONTROL RESET
PUSHBUTTON
MCR301

212-08 — TB-INTER 4 — from 212(5G)

SAFETY RELAY
RESET LOOP
(CONTACT #2)

CB7-2 — TB-INTER 5 — from 212(4F)

219-01 — TB-INTER 6 — from 212(5F)

GENERAL FAULT
LIGHT MODULE
ACTIVATE
COMMAND

223-01 — TB-INTER 7 — from 223(3G)

EQUIPMENT
FAULT
LT301
(A)

MAINTENANCE
LIGHT MODULE
ACTIVATE
COMMAND

223-02 — TB-INTER 8 — from 223(3G)

MAINTENANCE
WARNING
LT302
(R)

SAFETY RELAY
LIGHT MODULE
RUN COMMAND

223-00 — TB-INTER 9 — from 223(3H)

MASTER CONTROL RESET
PUSHBUTTON
MCR301
(B)
310(3G)

CONTROL PANEL

C-2 — TB-COM C

CB2-2 — TB-24V 24V

OI301
OPERATOR INTERFACE
+
-
SCHNEIDER ELECTRIC
HMIGTO5310
213(2F),310(7F)

C-2 — TB-COM C

NOT TO BE
USED FOR
INSTALLATION

USE REV 2.X
(FOR CONSTRUCTION)

NETWORK ARRANGEMENT

OPERATOR INTERFACE
OI301

310(3C)

FROM
CONTROL PANEL
ETHERNET SWITCH
(HUB201) – PORT 1

W-CP301-E1
HMI PANEL
ETHERNET CABLE

DESCRIPTION	ADRESSE IP
LOCAL OPERATOR INTERFACE	192.168.100.12

SEE CONTROL PANEL
PLC & NETWORK ARRANGEMENT
DIAGRAM FOR DETAILS

Notes générales / General notes

Rev.	Description	Date	Dessiné / Drawn
0.0	FOR APPROVAL	04/07/2023	D. MARTEL

LES INDUSTRIES FOURNIER INC.
FOURNIER INDUSTRIES INC.
3787 BOUL. FRONTENAC OUEST
THETFORD MINES, QUÉBEC, CANADA, G6H 2B5

CE DESSIN ET TOUTES LES INFORMATIONS QU'IL CONTIENT SONT LA PROPRIÉTÉ EXCLUSIVE DE LES INDUSTRIES FOURNIER INC. IL EST STRICTEMENT INTERDIT DE COMMUNIQUER OU UTILISER SON CONTENU À D'AUTRES FINS QUE CELLES PERMISES ORIGINALEMENT OU POUVANT ÊTRE PRÉJUDICIABLES AUX INTÉRÊTS DE LES INDUSTRIES FOURNIER INC. TOUTE REPRODUCTION DE CE DESSIN EST INTERDITE ET IL DOIT ÊTRE RETOURNÉ SUR DEMANDE.

THIS DRAWING AND ALL THE INFORMATION IT CONTAINS ARE THE EXCLUSIVE PROPERTY OF FOURNIER INDUSTRIES INC. IT IS STRICTLY FORBIDDEN TO COMMUNICATE OR USE THE INFORMATION FOR PURPOSES OTHER THAN THE ORIGINAL INTENDED ONES OR IF THE USE COULD BE HARMFUL TO THE INTERESTS OF FOURNIER INDUSTRIES INC. THIS DRAWING IN WHOLE OR IN PART MAY NOT BE REPRODUCED IN ANY FASHION AND HAS TO BE RETURNED TO FOURNIER INDUSTRIES INC. UPON REQUEST.

Sceau / Stamp

Créer par / Created by: D. MARTEL
Vérifié / Checked: G. ARCAND
Approuvé / Approuved: M.-A. TURGEON
Date de création / Creation date: 16/06/2023
Échelle / Scale:

WINNIPEG, MB
2 X ROTARY PRESS 3(4)-900/4000CVP

HMI PANEL
ELECTRICAL & NETWORK ARRANGEMENT

No Projet / Project No.	No Dessin/ Drawing No.	Revision
2023-11911	D - 23-8460 - 310	0.0

LEFT VIEW

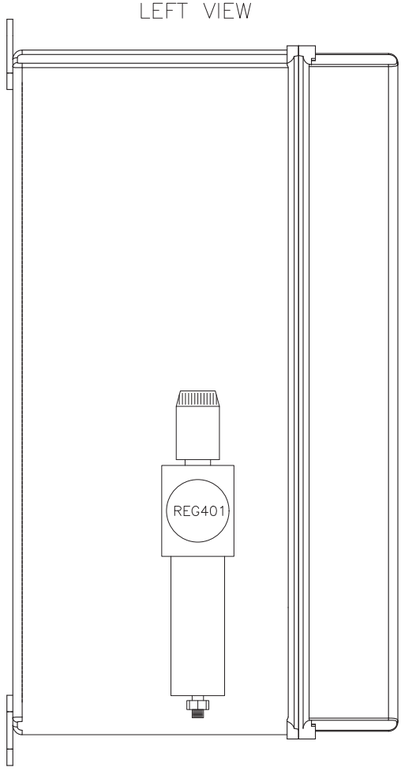

$10\frac{1}{2}$"
[266.2 MM]

FRONT VIEW

JB401

18.58"(H) x 16.99"(W) x 10.32"(D)
(472 x 432 x 263 mm)

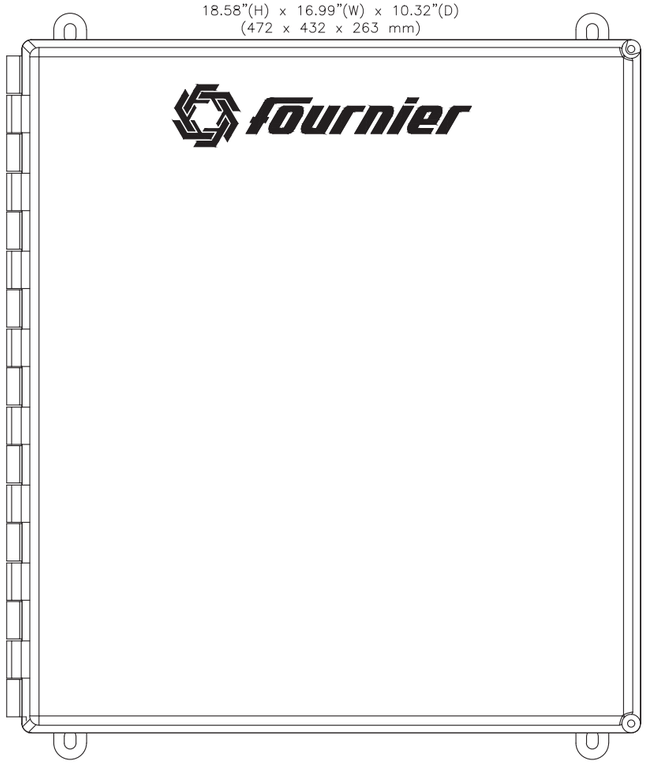

$18\frac{9}{16}$"
[471.9 MM]

BP401

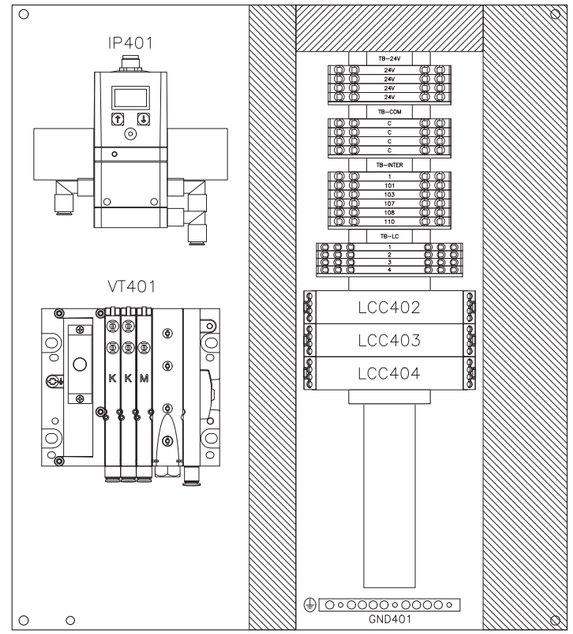

BOTTOM VIEW

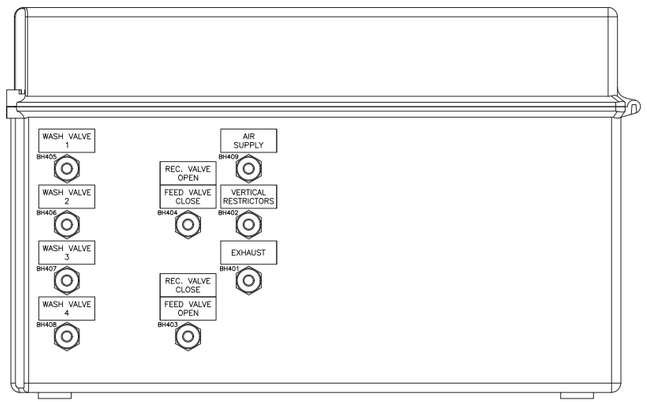

17"
[431.6 MM]

HSS-P33129

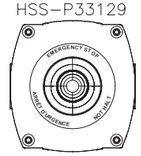

LOCATED ON THE MOTOR
OF THE ROTARY PRESS

NOT TO BE USED FOR INSTALLATION

USE REV 2.X
(FOR CONSTRUCTION)

Notes générales / General notes

* IMPORTANT
FINAL DESIGN WILL BE ON
"FOR CONSTRUCTION" REVISION.

Rev.	Description	Date	Dessiné / Drawn
0.0	FOR APPROVAL	04/07/2023	D. MARTEL

LES INDUSTRIES FOURNIER INC.
FOURNIER INDUSTRIES INC.
3787 BOUL. FRONTENAC OUEST
THETFORD MINES, QUÉBEC, CANADA, G6H 2B5

CE DESSIN ET TOUTES LES INFORMATIONS QU'IL CONTIENT SONT LA PROPRIÉTÉ EXCLUSIVE DE LES INDUSTRIES FOURNIER INC. IL EST STRICTEMENT INTERDIT DE COMMUNIQUER OU UTILISER SON CONTENU À D'AUTRES FINS QUE CELLES PERMISES ORIGINALEMENT OU POUVANT ÉTRE PRÉJUDICIABLES AUX INTÉRÊTS DE LES INDUSTRIES FOURNIER INC. TOUTE REPRODUCTION DE CE DESSIN EST INTERDITE ET IL DOIT ÉTRE RETOURNÉ SUR DEMANDE.

THIS DRAWING AND ALL THE INFORMATION IT CONTAINS ARE THE EXCLUSIVE PROPERTY OF FOURNIER INDUSTRIES INC. IT IS STRICTLY FORBIDDEN TO COMMUNICATE OR USE THE INFORMATION FOR PURPOSES OTHER THAN THE ORIGINAL INTENDED ONES OR IF THE USE COULD BE HARMFUL TO THE INTERESTS OF FOURNIER INDUSTRIES INC.. THIS DRAWING IN WHOLE OR IN PART MAY NOT BE REPRODUCED IN ANY FASHION AND HAS TO BE RETURNED TO FOURNIER INDUSTRIES INC. UPON REQUEST.

Sceau / Stamp

Créer par / Created by	D. MARTEL
Vérifié / Checked	G. ARCAND
Approuvé / Approuved	M.-A. TURGEON
Date de création / Creation date	16/06/2023
Échelle / Scale	

WINNIPEG, MB
2 X ROTARY PRESS 3(4)-900/4000CVP

ROTARY PRESS 1 – JB
PANEL ARRANGEMENT

No Projet / Project No.	No Dessin/ Drawing No.	Revision
2023-11911	D - 23-8460 - 400	0.0

TAG	QTY	DESCRIPTION	CAT. NO.	CAT. NO. (FOURNIER)	MANUFACTURER
BH401	1	BULKHEAD UNION, 1/4" TUBE, QBS-1/4T-U, METRIC THREAD	564750	FES-564750KE	FESTO
	1	SEALING RING, OL-M14, FOR BULKHEAD UNION, TUBE 1/4"	161183	FES-161183KE	FESTO
	1	DURABLACK PLATE : EXHAUST, WHITE ON BLACK, 1 1/2" x 5/8" x 1/16", ADHESIVE TYPE	PLATE_FOU_EXH	SUM-EXHAUSTKE	FOURNIER
BH402	1	BULKHEAD UNION, 1/4" TUBE, QBS-1/4T-U, METRIC THREAD	564750	FES-564750KE	FESTO
	1	SEALING RING, OL-M14, FOR BULKHEAD UNION, TUBE 1/4"	161183	FES-161183KE	FESTO
	1	DURABLACK PLATE : VERTICAL RESTRICTORS, WHITE ON BLACK, 1 1/2" x 5/8" x 1/16", ADHESIVE TYPE	PLATE_FOU_VER	SUM-VERTRESTRICTKE	FOURNIER
BH403	1	BULKHEAD UNION, 1/4" TUBE, QBS-1/4T-U, METRIC THREAD	564750	FES-564750KE	FESTO
	1	SEALING RING, OL-M14, FOR BULKHEAD UNION, TUBE 1/4"	161183	FES-161183KE	FESTO
	1	DURABLACK PLATE : FEED VALVE - OPEN, WHITE ON BLACK, 1 1/2" x 5/8" x 1/16", ADHESIVE TYPE	PLATE_FOU_FVO	SUM-FEEDVALOPENKE	FOURNIER
	1	DURABLACK PLATE : REC VALVE - CLOSE, WHITE ON BLACK, 1 1/2" x 5/8" x 1/16", ADHESIVE TYPE	PLATE_FOU_RVC	SUM-RECVALVCLOSEKE	FOURNIER
BH404	1	BULKHEAD UNION, 1/4" TUBE, QBS-1/4T-U, METRIC THREAD	564750	FES-564750KE	FESTO
	1	SEALING RING, OL-M14, FOR BULKHEAD UNION, TUBE 1/4"	161183	FES-161183KE	FESTO
	1	DURABLACK PLATE : FEED VALVE - CLOSE, WHITE ON BLACK, 1 1/2" x 5/8" x 1/16", ADHESIVE TYPE	PLATE_FOU_FVC	SUM-FEEDVALCLOSEKE	FOURNIER
	1	DURABLACK PLATE : REC VALVE - OPEN, WHITE ON BLACK, 1 1/2" x 5/8" x 1/16", ADHESIVE TYPE	PLATE_FOU_RVO	SUM-RECVALVEOPENKE	FOURNIER
BH405	1	BULKHEAD UNION, 1/4" TUBE, QBS-1/4T-U, METRIC THREAD	564750	FES-564750KE	FESTO
	1	SEALING RING, OL-M14, FOR BULKHEAD UNION, TUBE 1/4"	161183	FES-161183KE	FESTO
	1	DURABLACK PLATE : WASH VALVE 1, WHITE ON BLACK, 1 1/2" x 5/8" x 1/16", ADHESIVE TYPE	PLATE_FOU_WV1	SUM-WASHVALVE1KE	FOURNIER
	1	PUSH-TO-CONNECT PLUG FOR PNEUMATIC FITTING, 1\4", PLASTIC	SCO-P9- 1/4KE	SCO-P9- 1/4KE	FOURNIER
BH406	1	BULKHEAD UNION, 1/4" TUBE, QBS-1/4T-U, METRIC THREAD	564750	FES-564750KE	FESTO
	1	SEALING RING, OL-M14, FOR BULKHEAD UNION, TUBE 1/4"	161183	FES-161183KE	FESTO
	1	DURABLACK PLATE : WASH VALVE 2, WHITE ON BLACK, 1 1/2" x 5/8" x 1/16", ADHESIVE TYPE	PLATE_FOU_WV2	SUM-WASHVALVE2KE	FOURNIER
BH407	1	BULKHEAD UNION, 1/4" TUBE, QBS-1/4T-U, METRIC THREAD	564750	FES-564750KE	FESTO
	1	SEALING RING, OL-M14, FOR BULKHEAD UNION, TUBE 1/4"	161183	FES-161183KE	FESTO
	1	DURABLACK PLATE : WASH VALVE 3, WHITE ON BLACK, 1 1/2" x 5/8" x 1/16", ADHESIVE TYPE	PLATE_FOU_WV3	SUM-WASHVALVE3KE	FOURNIER
BH408	1	BULKHEAD UNION, 1/4" TUBE, QBS-1/4T-U, METRIC THREAD	564750	FES-564750KE	FESTO
	1	SEALING RING, OL-M14, FOR BULKHEAD UNION, TUBE 1/4"	161183	FES-161183KE	FESTO
	1	DURABLACK PLATE : WASH VALVE 4, WHITE ON BLACK, 1 1/2" x 5/8" x 1/16", ADHESIVE TYPE	PLATE_FOU_WV4	SUM-WASHVALVE4KE	FOURNIER
BH409	1	BULKHEAD UNION, 1/4" TUBE, QBS-1/4T-U, METRIC THREAD	564750	FES-564750KE	FESTO
	1	SEALING RING, OL-M14, FOR BULKHEAD UNION, TUBE 1/4"	161183	FES-161183KE	FESTO
	1	DURABLACK PLATE : AIR SUPPLY, WHITE ON BLACK, 1 1/2" x 5/8" x 1/16", ADHESIVE TYPE	PLATE_FOU_AIR	SUM-AIRSUPPLYKE	FOURNIER
	1	PUSH-TO-CONNECT PLUG FOR PNEUMATIC FITTING, 1\4", PLASTIC	SCO-P9- 1/4KE	SCO-P9- 1/4KE	FOURNIER
BP401	1	GALVANIZED BACK PLATE 18" X 16"	A18P16G	HOF-A18P16G	HOFFMAN
EB401	1	END BRACKET, CLIPFIX 35, GREY	3022218	PHO-3022218KE	PHOENIX CONTACT
GND401	1	TERMINAL ALUMINIUM #6-2/0 CU/AL, 3.75", 9 SCREW CONNECTIONS, 1/4	PK9GTA	SCH-PK9GTAKE	SCHNEIDER ELECTRIC
HSS-P33129	1	ENCLOSURE 1-HOLE, 22.5MM, PLASTIC, NEMA 4X	800F-1PP	ALL-800F1PPKE	AB
	1	PLASTIC EMERGENCY STOP, 22.5MM, HEAD 40MM TWIST LOCK, RED, IP66	800FP-MT44	ALL-800FPMT44KE	AB
	1	METAL LATCH FOR 800F OPERATOR	800F-ALM	ALL-800FALMKE	AB
	1	SCREW CONTACT BLOCK 1 N.C FOR 22.5MM OPERATOR	800F-X01	ALL-800FX01KE	AB
	1	UNIVERSAL E-STOP LEGEND PLATE, 22.5MM, 3 LANGUAGES, YELLOW WITH BLACK MARKING	800F-15YSM112	ALL-800F15YSM112KE	AB
	1	MOUNTING BRACKET FOR ENCLOSURE 800F-1PP OR 800H-1HZ4R	IFI-02112	IFI-02112	FOURNIER
	1	LIQUID TIGHT CONNECTOR, SWIVEL STRAIGHT TO 90, FOR 3/8" CONDUIT, 1/2 NPT, PLASTIC	PS0389NGY	TEC-CCNY-375-8KE	HUBBELL
	12	LIQUID TIGHT CONDUIT, 3/8", IN FEET	FTPV3758C	TEC-FTPV375-8CKE	TECHSPAN
	1	REDUCING ADAPTER, M20 ISO TO 1/2" NPT THREAD	M20-50	ADP-500NPTM2050KE.	THOMAS & BETTS
IP401	1	I/P CONVERTER, 0-87 PSI (6 BARS), 24VDC, 4-20MA, OUTPUT PNP	VPPE-3-1-1/8-6-420-E1	FES-13109707	FESTO
JB401	1	FIBERGLASS ENCLOSURE (18" X16" X 10")	A181610CHSCFG	HOF-A181610CHSCFG	HOFFMAN
	1	CORROSION INHIBITOR, EMITTER FOR 5 CUBIC FOOT (25 PER PACKAGE)	AHCI5E	HOF-AHCI5EKE	HOFFMAN
LCC402	1	ACT20P-BRIDGE-S, MEASURING BRIDGE CONVERTER, RESISTANCE MEASURING, 0(4)-20mA	1067250000	WEI-1067250000	WEIDMULLER
LCC403	1	ACT20P-BRIDGE-S, MEASURING BRIDGE CONVERTER, RESISTANCE MEASURING, 0(4)-20mA	1067250000	WEI-1067250000	WEIDMULLER
LCC404	1	ACT20P-BRIDGE-S, MEASURING BRIDGE CONVERTER, RESISTANCE MEASURING, 0(4)-20mA	1067250000	WEI-1067250000	WEIDMULLER
REG401	1	FILTER REGULATOR, WITH AUTOMATIC DRAIN	MS4N-LFR-0.25-D7-CRV-AS	IFI-02067	FESTO
	1	NIPPLE 1/4" TUBE (BRASS)	FAI-122-B	FAI-122-BKP	FAIRVIEW
	1	BULKHEAD 3/4" FOR UNION 1/4" TUBE (BRASS)	207ACBH-4	PAR-207ACBH-4KP	PARKER

TAG	QTY	DESCRIPTION	CAT. NO.	CAT. NO. (FOURNIER)	MANUFACTURER
SE401	1	SWIVEL ELBOW 90 1/4" TUBE 1/4" THREAD	D6069-4B	DOM-D6069-4BKP	DOMINION FITTING
SE402	1	SWIVEL ELBOW 90 1/4" TUBE 1/4" THREAD	D6069-4B	DOM-D6069-4BKP	DOMINION FITTING
SE403	1	SWIVEL ELBOW 90 1/4" TUBE 1/4" THREAD	D6069-4B	DOM-D6069-4BKP	DOMINION FITTING
SE404	1	SWIVEL ELBOW 90 1/4" TUBE 1/4" THREAD	D6069-4B	DOM-D6069-4BKP	DOMINION FITTING
TB-24V	1	GROUP MARKER FOR END BRACKET CLIPFIX 35, HEIGHT-ADJUSTABLE, GRAY	0811969	PHO-0811969KE	PHOENIX CONTACT
	4	PTTB4, PUSH-IN TERMINAL, 2 LEVELS, 28A, GREY, 10-24 AWG	3211786	PHO-3211786KE	PHOENIX CONTACT
	1	PTTB4 PARTITION PLATE, GREY, (D-STTB4)	3030462	PHO-3030462KE	PHOENIX CONTACT
TB-COM	1	GROUP MARKER FOR END BRACKET CLIPFIX 35, HEIGHT-ADJUSTABLE, GRAY	0811969	PHO-0811969KE	PHOENIX CONTACT
	4	PTTB4, PUSH-IN TERMINAL, 2 LEVELS, 28A, GREY, 10-24 AWG	3211786	PHO-3211786KE	PHOENIX CONTACT
	1	PTTB4 PARTITION PLATE, GREY, (D-STTB4)	3030462	PHO-3030462KE	PHOENIX CONTACT
TB-INTER	1	GROUP MARKER FOR END BRACKET CLIPFIX 35, HEIGHT-ADJUSTABLE, GRAY	0811969	PHO-0811969KE	PHOENIX CONTACT
	6	PTTB4, PUSH-IN TERMINAL, 2 LEVELS, 28A, GREY, 10-24 AWG	3211786	PHO-3211786KE	PHOENIX CONTACT
	1	PTTB4 PARTITION PLATE, GREY, (D-STTB4)	3030462	PHO-3030462KE	PHOENIX CONTACT
TB-LC	1	END BRACKET, CLIPFIX 35, GREY	3022218	PHO-3022218KE	PHOENIX CONTACT
	1	GROUP MARKER FOR END BRACKET CLIPFIX 35, HEIGHT-ADJUSTABLE, GRAY	0811969	PHO-0811969KE	PHOENIX CONTACT
	4	PT 2,5-3L, SPRING CAGE TERMINAL, 3 LEVELS, 20A, 12-26 AWG, GREY	3210499	PHO-3210499KE	PHOENIX CONTACT
	1	PT 2.5-3L, PARTITION PLATE, 3 LEVELS, GREY	3211647	PHO-3211647KE	PHOENIX CONTACT
TE401	1	UNION TEE 1/4" X 1/4" X 1/4" TUBE	D6064-4	DOM-D6064-4KP	DOMINION FITTING
TE402	1	UNION TEE 1/4" X 1/4" X 1/4" TUBE	D6064-4	DOM-D6064-4KP	DOMINION FITTING
TE403	1	UNION TEE 1/4" X 1/4" X 1/4" TUBE	D6064-4	DOM-D6064-4KP	DOMINION FITTING
VT401	1	VALVE TERMINALS, 24VDC, 25PIN DSUB, 1/4 PORTS, MODULES - K (2), M (1)	34P-MS1-SGUGKLGAL-3AU-KKM+HDD	FES-13112521	FESTO
	2	PUSH-IN FITTING FOR MPA-L VALVE TERMINAL	QB-1/4-1/4-U-M	FES-533219KE	FESTO

NOT TO BE USED FOR INSPECTION USE REV 2.X (FOR CONSTRUCTION)

Notes générales / General notes

Rev.	Description	Date	Dessiné / Drawn
0.0	FOR APPROVAL	04/07/2023	D. MARTEL

LES INDUSTRIES FOURNIER INC.
FOURNIER INDUSTRIES INC.
3787 BOUL. FRONTENAC OUEST
THETFORD MINES, QUÉBEC, CANADA, G6H 2B5

CE DESSIN ET TOUTES LES INFORMATIONS QU'IL CONTIENT SONT LA PROPRIÉTÉ EXCLUSIVE DE LES INDUSTRIES FOURNIER INC. IL EST STRICTEMENT INTERDIT DE COMMUNIQUER OU UTILISER SON CONTENU À D'AUTRES FINS QUE CELLES PERMISES ORIGINALEMENT OU POUVANT ÊTRE PRÉJUDICIABLES AUX INTÉRÊTS DE LES INDUSTRIES FOURNIER INC. TOUTE REPRODUCTION DE CE DESSIN EST INTERDITE ET IL DOIT ÊTRE RETOURNÉ SUR DEMANDE.

THIS DRAWING AND ALL THE INFORMATION IT CONTAINS ARE THE EXCLUSIVE PROPERTY OF FOURNIER INDUSTRIES INC. IT IS STRICTLY FORBIDDEN TO COMMUNICATE OR USE THE INFORMATION FOR PURPOSES OTHER THAN THE ORIGINAL INTENDED ONES OR IF THE USE COULD BE HARMFUL TO THE INTERESTS OF FOURNIER INDUSTRIES INC. THIS DRAWING IN WHOLE OR IN PART MAY NOT BE REPRODUCED IN ANY FASHION AND HAS TO BE RETURNED TO FOURNIER INDUSTRIES INC. UPON REQUEST.

Sceau / Stamp

Créer par / Created by	D. MARTEL
Vérifié / Checked	G. ARCAND
Approuvé / Approuved	M.-A. TURGEON
Date de création / Creation date	16/06/2023
Échelle / Scale	

WINNIPEG, MB

2 X ROTARY PRESS 3(4)-900/4000CVP

ROTARY PRESS 1 - JB
LIST OF MATERIAL

No Projet / Project No.	No Dessin/ Drawing No.	Revision
2023-11911	D- 23-8460 - 401	0.0

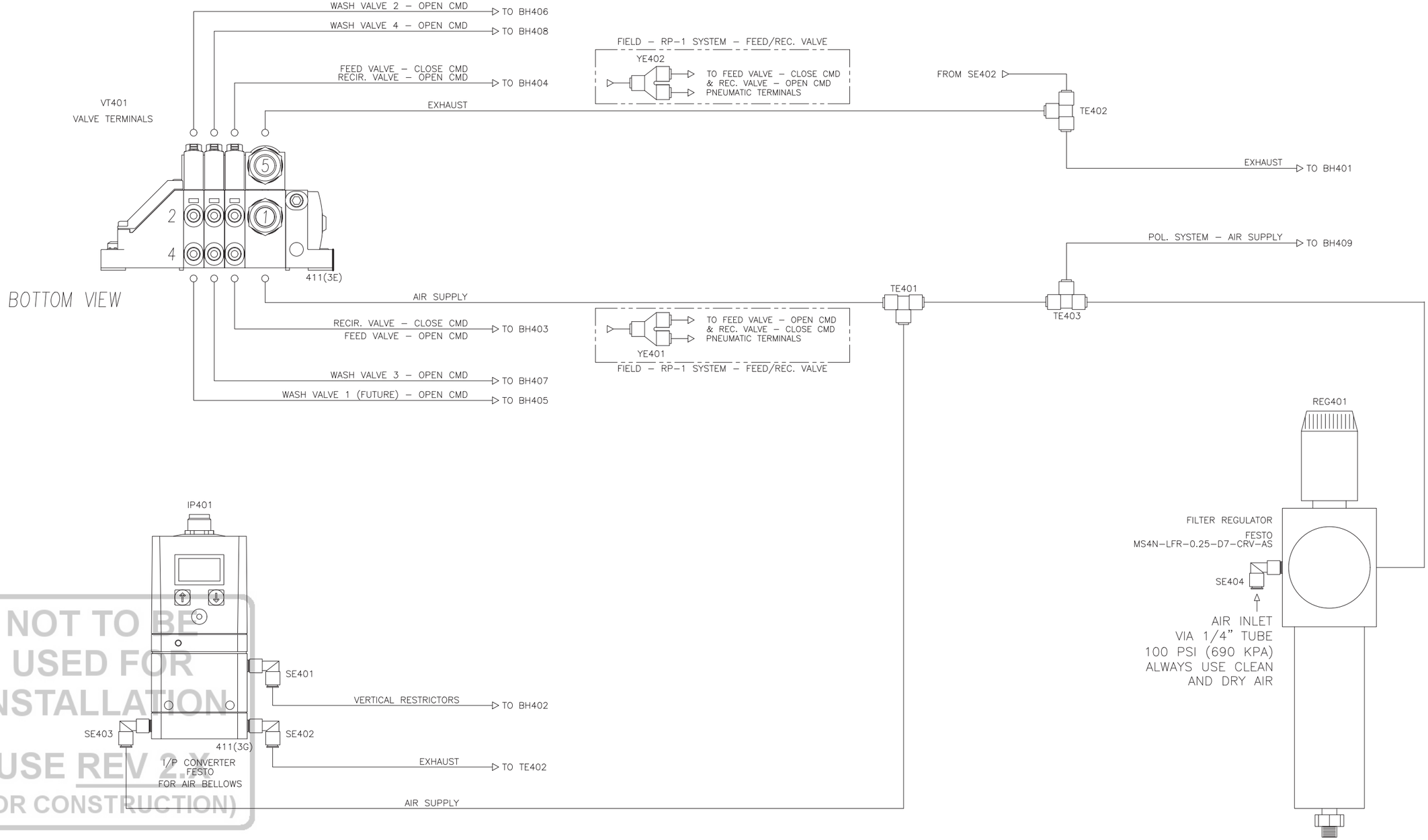

NOT TO BE USED FOR INSTALLATION
USE REV 2.X
(FOR CONSTRUCTION)

Notes générales / General notes

Rev.	Description	Date	Dessiné / Drawn
0.0	FOR APPROVAL	04/07/2023	D. MARTEL

LES INDUSTRIES FOURNIER INC.
FOURNIER INDUSTRIES INC.
3787 BOUL. FRONTENAC OUEST
THETFORD MINES, QUÉBEC, CANADA, G6H 2B5

CE DESSIN ET TOUTES LES INFORMATIONS QU'IL CONTIENT SONT LA PROPRIÉTÉ EXCLUSIVE DE LES INDUSTRIES FOURNIER INC. IL EST STRICTEMENT INTERDIT DE COMMUNIQUER OU UTILISER SON CONTENU À D'AUTRES FINS QUE CELLES PERMISES ORIGINALEMENT OU POUVANT ÊTRE PRÉJUDICIABLES AUX INTÉRÊTS DE LES INDUSTRIES FOURNIER INC. TOUTE REPRODUCTION DE CE DESSIN EST INTERDITE ET IL DOIT ÊTRE RETOURNÉ SUR DEMANDE.

THIS DRAWING AND ALL THE INFORMATION IT CONTAINS ARE THE EXCLUSIVE PROPERTY OF FOURNIER INDUSTRIES INC. IT IS STRICTLY FORBIDDEN TO COMMUNICATE OR USE THE INFORMATION FOR PURPOSES OTHER THAN THE ORIGINAL INTENDED ONES OR IF THE USE COULD BE HARMFUL TO THE INTERESTS OF FOURNIER INDUSTRIES INC. THIS DRAWING IN WHOLE OR IN PART MAY NOT BE REPRODUCED IN ANY FASHION AND HAS TO BE RETURNED TO FOURNIER INDUSTRIES INC. UPON REQUEST.

Sceau / Stamp

Créer par / Created by: D. MARTEL
Vérifié / Checked: G. ARCAND
Approuvé / Approuved: M.–A. TURGEON
Date de création / Creation date: 16/06/2023
Échelle / Scale:

WINNIPEG, MB

2 X ROTARY PRESS 3(4)–900/4000CVP

ROTARY PRESS 1 – JB
PNEUMATIC ARRANGEMENT

No Projet / Project No.	No Dessin/ Drawing No.	Revision
2023-11911	D - 23-8460 - 410	0.0

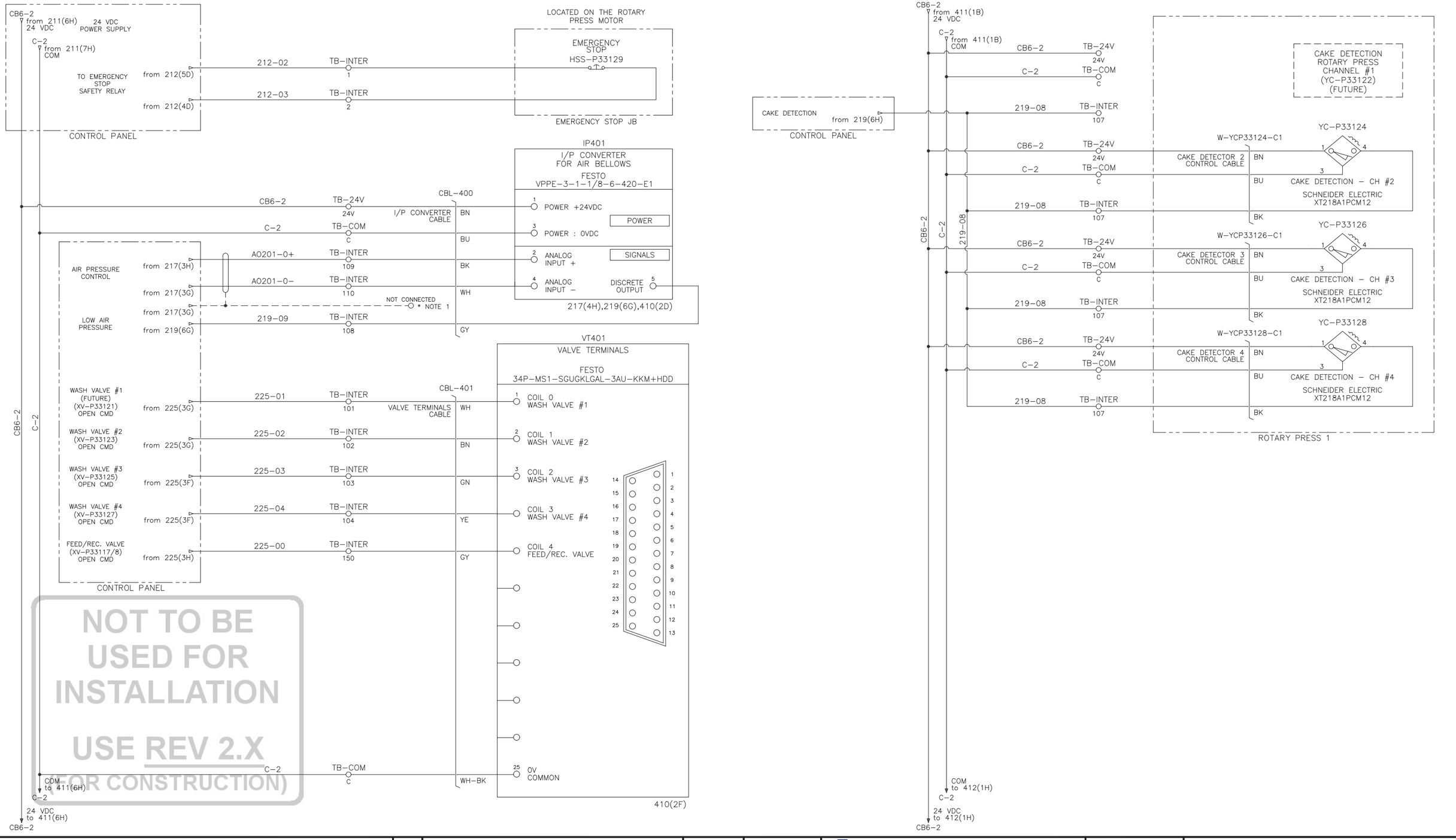

NOT TO BE USED FOR INSTALLATION

USE REV 2.X

(FOR CONSTRUCTION)

Notes générales / General notes

NOTE 1:
CABLE SHIELDING MUST STAY UNCONNECTED ON THIS SIDE.

Rev.	Description	Date	Dessiné / Drawn
0.0	FOR APPROVAL	04/07/2023	D. MARTEL

LES INDUSTRIES FOURNIER INC.
FOURNIER INDUSTRIES INC.
3787 BOUL. FRONTENAC OUEST
THETFORD MINES, QUÉBEC, CANADA, G6H 2B5

CE DESSIN ET TOUTES LES INFORMATIONS QU'IL CONTIENT SONT LA PROPRIÉTÉ EXCLUSIVE DE LES INDUSTRIES FOURNIER INC. IL EST STRICTEMENT INTERDIT DE COMMUNIQUER OU UTILISER SON CONTENU À D'AUTRES FINS QUE CELLES PERMISES ORIGINALEMENT OU POUVANT ÊTRE PRÉJUDICIABLES AUX INTÉRÊTS DE LES INDUSTRIES FOURNIER INC. TOUTE REPRODUCTION DE CE DESSIN EST INTERDITE ET IL DOIT ÊTRE RETOURNÉ SUR DEMANDE.

THIS DRAWING AND ALL THE INFORMATION IT CONTAINS ARE THE EXCLUSIVE PROPERTY OF FOURNIER INDUSTRIES INC. IT IS STRICTLY FORBIDDEN TO COMMUNICATE OR USE THE INFORMATION FOR PURPOSES OTHER THAN THE ORIGINAL INTENDED ONES OR IF THE USE COULD BE HARMFUL TO THE INTERESTS OF FOURNIER INDUSTRIES INC. THIS DRAWING IN WHOLE OR IN PART MAY NOT BE REPRODUCED IN ANY FASHION AND HAS TO BE RETURNED TO FOURNIER INDUSTRIES INC. UPON REQUEST.

Sceau / Stamp

Créer par / Created by	D. MARTEL
Vérifié / Checked	G. ARCAND
Approuvé / Approuved	M.-A. TURGEON
Date de création / Creation date	16/06/2023
Échelle / Scale	

WINNIPEG, MB

2 X ROTARY PRESS 3(4)-900/4000CVP

ROTARY PRESS 1 - JB
ELECTRICAL ARRANGEMENT - (1 OF 2)

No Projet / Project No.	No Dessin/ Drawing No.	Revision
2023-11911	D- 23-8460 - 411	0.0

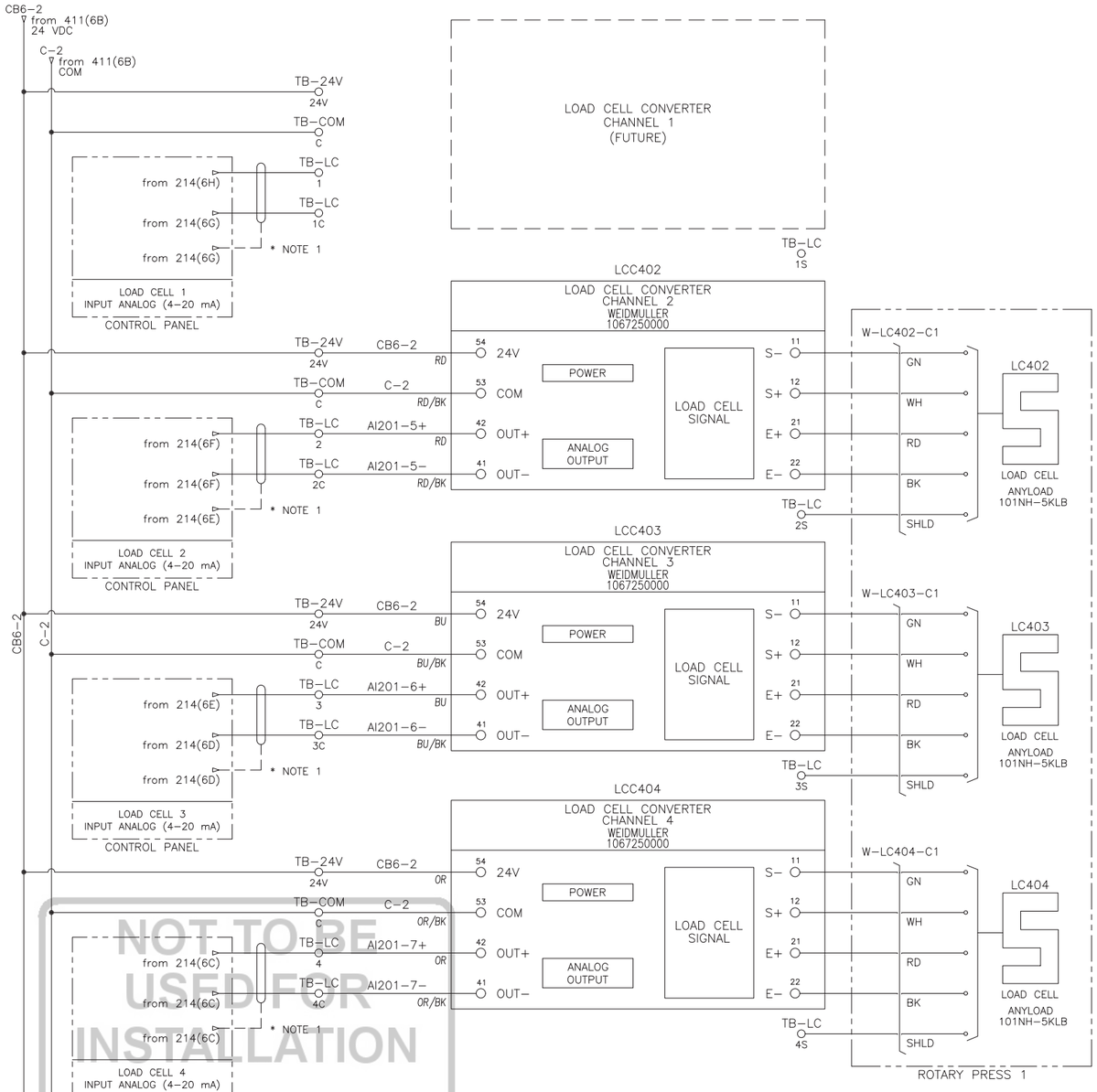

NOT TO BE USED FOR INSTALLATION
USE REV 2.X
(FOR CONSTRUCTION)

DIP SWITCH POSITION ON LOAD CELL CONVERTER

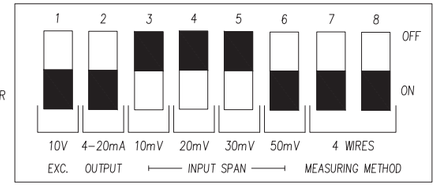

EXCITATION = 10 VDC
LOAD CELL = 3 mV/V
SIGNAL = 0 - 30 mV
4 mA = 0 LBS
20 mA = 8333.33 LBS

* IMPORTANT *

LOAD CELL CABLES MUST REMAIN AT FULL LENGTH. PRECISION WILL BE ALTERED IF THEY ARE SHORTENED.

Notes générales / General notes

NOTE 1:
CABLE SHIELDING MUST STAY UNCONNECTED ON THIS SIDE.

Rev.	Description	Date	Dessiné / Drawn
0.0	FOR APPROVAL	04/07/2023	D. MARTEL

LES INDUSTRIES FOURNIER INC.
FOURNIER INDUSTRIES INC.
3787 BOUL. FRONTENAC OUEST
THETFORD MINES, QUÉBEC, CANADA, G6H 2B5

CE DESSIN ET TOUTES LES INFORMATIONS QU'IL CONTIENT SONT LA PROPRIÉTÉ EXCLUSIVE DE LES INDUSTRIES FOURNIER INC. IL EST STRICTEMENT INTERDIT DE COMMUNIQUER OU UTILISER SON CONTENU À D'AUTRES FINS QUE CELLES PERMISES ORIGINALEMENT OU POUVANT ÊTRE PRÉJUDICIABLES AUX INTÉRÊTS DE LES INDUSTRIES FOURNIER INC. TOUTE REPRODUCTION DE CE DESSIN EST INTERDITE ET IL DOIT ÊTRE RETOURNÉ SUR DEMANDE.

THIS DRAWING AND ALL THE INFORMATION IT CONTAINS ARE THE EXCLUSIVE PROPERTY OF FOURNIER INDUSTRIES INC. IT IS STRICTLY FORBIDDEN TO COMMUNICATE OR USE THE INFORMATION FOR PURPOSES OTHER THAN THE ORIGINAL INTENDED ONES OR IF THE USE COULD BE HARMFUL TO THE INTERESTS OF FOURNIER INDUSTRIES INC. THIS DRAWING IN WHOLE OR IN PART MAY NOT BE REPRODUCED IN ANY FASHION AND HAS TO BE RETURNED TO FOURNIER INDUSTRIES INC. UPON REQUEST.

Sceau / Stamp

Créer par / Created by	D. MARTEL
Vérifié / Checked	G. ARCAND
Approuvé / Approuved	M.-A. TURGEON
Date de création / Creation date	16/06/2023
Échelle / Scale	

WINNIPEG, MB

2 X ROTARY PRESS 3(4)-900/4000CVP

ROTARY PRESS 1 - JB
ELECTRICAL ARRANGEMENT - (2 OF 2)

No Projet / Project No.	No Dessin/ Drawing No.	Revision
2023-11911	D- 23-8460 - 412	0.0

LEFT VIEW

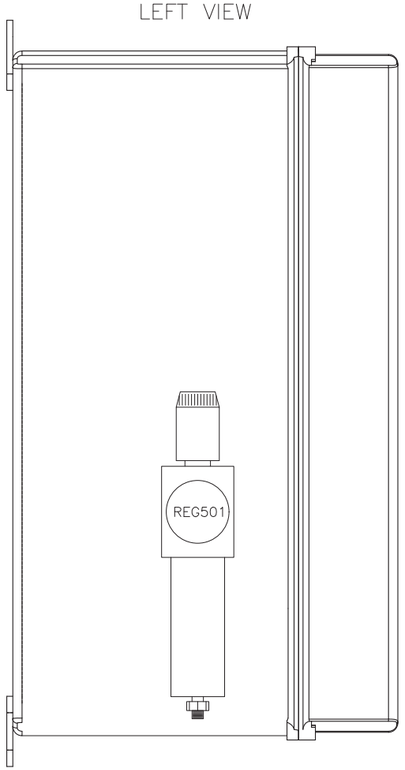

$10\frac{1}{2}$"
[266.2 MM]

FRONT VIEW

JB501

18.58"(H) x 16.99"(W) x 10.32"(D)
(472 x 432 x 263 mm)

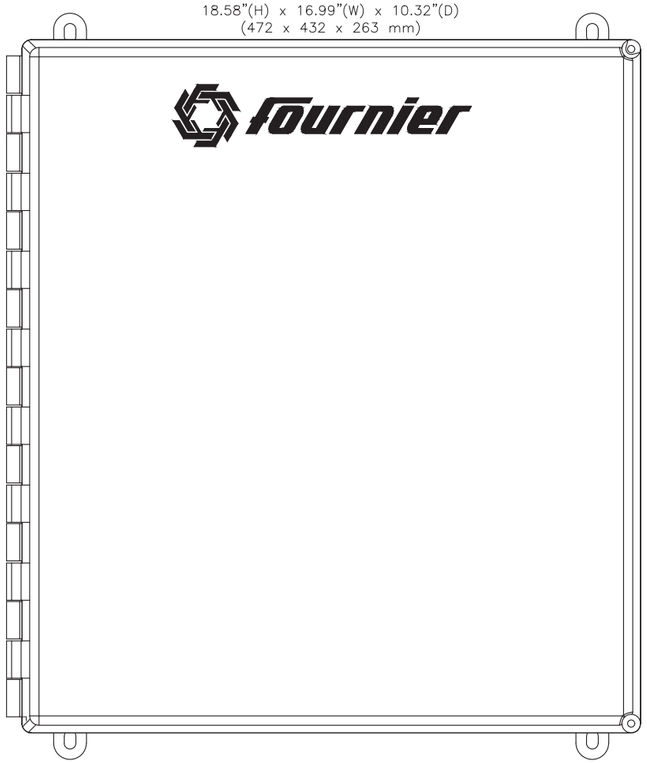

$18\frac{9}{16}$"
[471.9 MM]

BP501

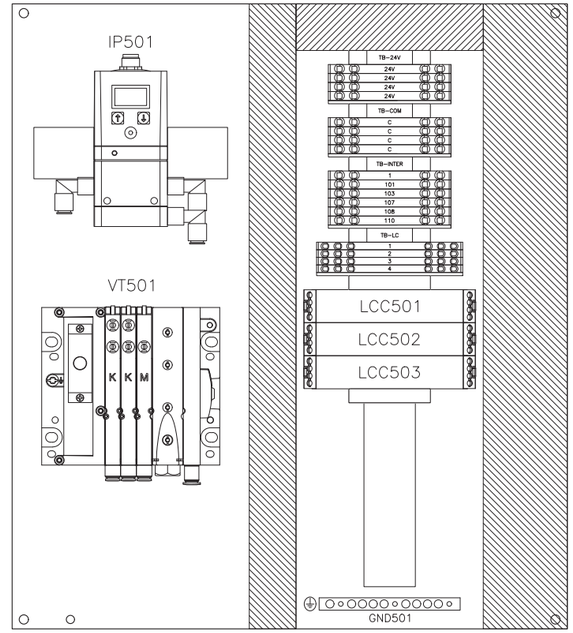

BOTTOM VIEW

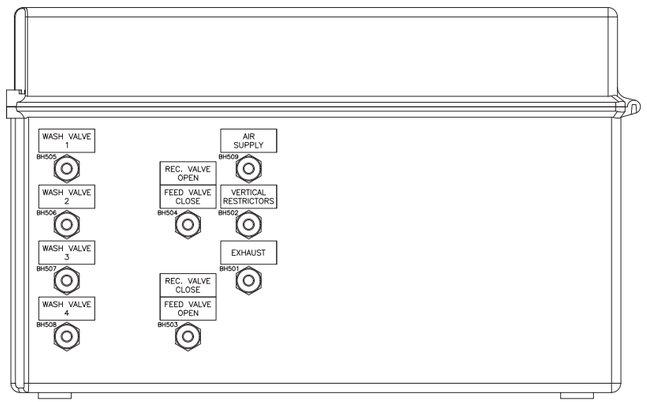

17"
[431.6 MM]

HSS-P33229

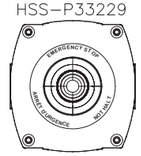

LOCATED ON THE MOTOR
OF THE ROTARY PRESS

NOT TO BE USED FOR INSTALLATION

USE REV 2.X
(FOR CONSTRUCTION)

Notes générales / General notes

* IMPORTANT
FINAL DESIGN WILL BE ON
"FOR CONSTRUCTION" REVISION.

Rev.	Description	Date	Dessiné / Drawn
0.0	FOR APPROVAL	04/07/2023	D. MARTEL

CE DESSIN ET TOUTES LES INFORMATIONS QU'IL CONTIENT SONT LA PROPRIÉTÉ EXCLUSIVE DE LES INDUSTRIES FOURNIER INC. IL EST STRICTEMENT INTERDIT DE COMMUNIQUER OU UTILISER SON CONTENU À D'AUTRES FINS QUE CELLES PERMISES ORIGINALEMENT OU POUVANT ÊTRE PRÉJUDICIABLES AUX INTÉRÊTS DE LES INDUSTRIES FOURNIER INC. TOUTE REPRODUCTION DE CE DESSIN EST INTERDITE ET IL DOIT ÊTRE RETOURNÉ SUR DEMANDE.

THIS DRAWING AND ALL THE INFORMATION IT CONTAINS ARE THE EXCLUSIVE PROPERTY OF FOURNIER INDUSTRIES INC. IT IS STRICTLY FORBIDDEN TO COMMUNICATE OR USE THE INFORMATION FOR PURPOSES OTHER THAN THE ORIGINAL INTENDED ONES OR IF THE USE COULD BE HARMFUL TO THE INTERESTS OF FOURNIER INDUSTRIES INC. THIS DRAWING IN WHOLE OR IN PART MAY NOT BE REPRODUCED IN ANY FASHION AND HAS TO BE RETURNED TO FOURNIER INDUSTRIES INC. UPON REQUEST.

LES INDUSTRIES FOURNIER INC.
FOURNIER INDUSTRIES INC.
3787 BOUL. FRONTENAC OUEST
THETFORD MINES, QUÉBEC, CANADA, G6H 2B5

Sceau / Stamp

Créer par / Created by	D. MARTEL
Vérifié / Checked	G. ARCAND
Approuvé / Approuved	M.-A. TURGEON
Date de création / Creation date	16/06/2023
Échelle / Scale	

WINNIPEG, MB
2 X ROTARY PRESS 3(4)-900/4000CVP

ROTARY PRESS 2 – JB
PANEL ARRANGEMENT

No Projet / Project No.	No Dessin/ Drawing No.	Revision
2023-11911	D - 23-8460 - 500	0.0

TAG	QTY	DESCRIPTION	CAT. NO.	CAT. NO. (FOURNIER)	MANUFACTURER
BH501	1	BULKHEAD UNION, 1/4" TUBE, QBS-1/4T-U, METRIC THREAD	564750	FES-564750KE	FESTO
	1	SEALING RING, OL-M14, FOR BULKHEAD UNION, TUBE 1/4"	161183	FES-161183KE	FESTO
	1	DURABLACK PLATE : EXHAUST, WHITE ON BLACK, 1 1/2" x 5/8" x 1/16", ADHESIVE TYPE	PLATE_FOU_EXH	SUM-EXHAUSTKE	FOURNIER
BH502	1	BULKHEAD UNION, 1/4" TUBE, QBS-1/4T-U, METRIC THREAD	564750	FES-564750KE	FESTO
	1	SEALING RING, OL-M14, FOR BULKHEAD UNION, TUBE 1/4"	161183	FES-161183KE	FESTO
	1	DURABLACK PLATE : VERTICAL RESTRICTORS, WHITE ON BLACK, 1 1/2" x 5/8" x 1/16", ADHESIVE TYPE	PLATE_FOU_VER	SUM-VERTRESTRICTKE	FOURNIER
BH503	1	BULKHEAD UNION, 1/4" TUBE, QBS-1/4T-U, METRIC THREAD	564750	FES-564750KE	FESTO
	1	SEALING RING, OL-M14, FOR BULKHEAD UNION, TUBE 1/4"	161183	FES-161183KE	FESTO
	1	DURABLACK PLATE : FEED VALVE - OPEN, WHITE ON BLACK, 1 1/2" x 5/8" x 1/16", ADHESIVE TYPE	PLATE_FOU_FVO	SUM-FEEDVALOPENKE	FOURNIER
	1	DURABLACK PLATE : REC VALVE - CLOSE, WHITE ON BLACK, 1 1/2" x 5/8" x 1/16", ADHESIVE TYPE	PLATE_FOU_RVC	SUM-RECVALVCLOSEKE	FOURNIER
BH504	1	BULKHEAD UNION, 1/4" TUBE, QBS-1/4T-U, METRIC THREAD	564750	FES-564750KE	FESTO
	1	SEALING RING, OL-M14, FOR BULKHEAD UNION, TUBE 1/4"	161183	FES-161183KE	FESTO
	1	DURABLACK PLATE : FEED VALVE - CLOSE, WHITE ON BLACK, 1 1/2" x 5/8" x 1/16", ADHESIVE TYPE	PLATE_FOU_FVC	SUM-FEEDVALCLOSEKE	FOURNIER
	1	DURABLACK PLATE : REC VALVE - OPEN, WHITE ON BLACK, 1 1/2" x 5/8" x 1/16", ADHESIVE TYPE	PLATE_FOU_RVO	SUM-RECVALVEOPENKE	FOURNIER
BH505	1	BULKHEAD UNION, 1/4" TUBE, QBS-1/4T-U, METRIC THREAD	564750	FES-564750KE	FESTO
	1	SEALING RING, OL-M14, FOR BULKHEAD UNION, TUBE 1/4"	161183	FES-161183KE	FESTO
	1	DURABLACK PLATE : WASH VALVE 1, WHITE ON BLACK, 1 1/2" x 5/8" x 1/16", ADHESIVE TYPE	PLATE_FOU_WV1	SUM-WASHVALVE1KE	FOURNIER
BH506	1	BULKHEAD UNION, 1/4" TUBE, QBS-1/4T-U, METRIC THREAD	564750	FES-564750KE	FESTO
	1	SEALING RING, OL-M14, FOR BULKHEAD UNION, TUBE 1/4"	161183	FES-161183KE	FESTO
	1	DURABLACK PLATE : WASH VALVE 2, WHITE ON BLACK, 1 1/2" x 5/8" x 1/16", ADHESIVE TYPE	PLATE_FOU_WV2	SUM-WASHVALVE2KE	FOURNIER
BH507	1	BULKHEAD UNION, 1/4" TUBE, QBS-1/4T-U, METRIC THREAD	564750	FES-564750KE	FESTO
	1	SEALING RING, OL-M14, FOR BULKHEAD UNION, TUBE 1/4"	161183	FES-161183KE	FESTO
	1	DURABLACK PLATE : WASH VALVE 3, WHITE ON BLACK, 1 1/2" x 5/8" x 1/16", ADHESIVE TYPE	PLATE_FOU_WV3	SUM-WASHVALVE3KE	FOURNIER
BH508	1	BULKHEAD UNION, 1/4" TUBE, QBS-1/4T-U, METRIC THREAD	564750	FES-564750KE	FESTO
	1	SEALING RING, OL-M14, FOR BULKHEAD UNION, TUBE 1/4"	161183	FES-161183KE	FESTO
	1	DURABLACK PLATE : WASH VALVE 4, WHITE ON BLACK, 1 1/2" x 5/8" x 1/16", ADHESIVE TYPE	PLATE_FOU_WV4	SUM-WASHVALVE4KE	FOURNIER
	1	PUSH-TO-CONNECT PLUG FOR PNEUMATIC FITTING, 1\4", PLASTIC	SCO-P9- 1/4KE	SCO-P9- 1/4KE	FOURNIER
BH509	1	BULKHEAD UNION, 1/4" TUBE, QBS-1/4T-U, METRIC THREAD	564750	FES-564750KE	FESTO
	1	SEALING RING, OL-M14, FOR BULKHEAD UNION, TUBE 1/4"	161183	FES-161183KE	FESTO
	1	DURABLACK PLATE : AIR SUPPLY, WHITE ON BLACK, 1 1/2" x 5/8" x 1/16", ADHESIVE TYPE	PLATE_FOU_AIR	SUM-AIRSUPPLYKE	FOURNIER
	1	PUSH-TO-CONNECT PLUG FOR PNEUMATIC FITTING, 1\4", PLASTIC	SCO-P9- 1/4KE	SCO-P9- 1/4KE	FOURNIER
BP501	1	GALVANIZED BACK PLATE 18" X 16"	A18P16G	HOF-A18P16G	HOFFMAN
EB501	1	END BRACKET, CLIPFIX 35, GREY	3022218	PHO-3022218KE	PHOENIX CONTACT
GND501	1	TERMINAL ALUMINIUM #6-2/0 CU/AL, 3.75", 9 SCREW CONNECTIONS, 1/4	PK9GTA	SCH-PK9GTAKE	SCHNEIDER ELECTRIC
HSS-P33229	1	ENCLOSURE 1-HOLE, 22.5MM, PLASTIC, NEMA 4X	800F-1PP	ALL-800F1PPKE	AB
	1	PLASTIC EMERGENCY STOP, 22.5MM, HEAD 40MM TWIST LOCK, RED, IP66	800FP-MT44	ALL-800FPMT44KE	AB
	1	METAL LATCH FOR 800F OPERATOR	800F-ALM	ALL-800FALMKE	AB
	1	SCREW CONTACT BLOCK 1 N.C FOR 22.5MM OPERATOR	800F-X01	ALL-800FX01KE	AB
	1	UNIVERSAL E-STOP LEGEND PLATE, 22.5MM, 3 LANGUAGES, YELLOW WITH BLACK MARKING	800F-15YSM112	ALL-800F15YSM112KE	AB
	1	MOUNTING BRACKET FOR ENCLOSURE 800F-1PP OR 800H-1HZ4R	IFI-02112	IFI-02112	FOURNIER
	1	LIQUID TIGHT CONNECTOR, SWIVEL STRAIGHT TO 90, FOR 3/8" CONDUIT, 1/2 NPT, PLASTIC	PS0389NGY	TEC-CCNY-375-8KE	HUBBELL
	12	LIQUID TIGHT CONDUIT, 3/8", IN FEET	FTPV3758C	TEC-FTPV375-8CKE	TECHSPAN
	1	REDUCING ADAPTER, M20 ISO TO 1/2" NPT THREAD	M20-50	ADP-500NPTM2050KE.	THOMAS & BETTS
IP501	1	I/P CONVERTER, 0-87 PSI (6 BARS), 24VDC, 4-20MA, OUTPUT PNP	VPPE-3-1-1/8-6-420-E1	FES-13109707	FESTO
JB501	1	FIBERGLASS ENCLOSURE (18" X16" X 10")	A181610CHSCFG	HOF-A181610CHSCFG	HOFFMAN
	1	CORROSION INHIBITOR, EMITTER FOR 5 CUBIC FOOT (25 PER PACKAGE)	AHCI5E	HOF-AHCI5EKE	HOFFMAN
LCC501	1	ACT20P-BRIDGE-S, MEASURING BRIDGE CONVERTER, RESISTANCE MEASURING, 0(4)-20mA	1067250000	WEI-1067250000	WEIDMULLER
LCC502	1	ACT20P-BRIDGE-S, MEASURING BRIDGE CONVERTER, RESISTANCE MEASURING, 0(4)-20mA	1067250000	WEI-1067250000	WEIDMULLER
LCC503	1	ACT20P-BRIDGE-S, MEASURING BRIDGE CONVERTER, RESISTANCE MEASURING, 0(4)-20mA	1067250000	WEI-1067250000	WEIDMULLER
REG501	1	FILTER REGULATOR, WITH AUTOMATIC DRAIN	MS4N-LFR-0.25-D7-CRV-AS	IFI-02067	FESTO
	1	NIPPLE 1/4" TUBE (BRASS)	FAI-122-B	FAI-122-BKP	FAIRVIEW
	1	BULKHEAD 3/4" FOR UNION 1/4" TUBE (BRASS)	207ACBH-4	PAR-207ACBH-4KP	PARKER

TAG	QTY	DESCRIPTION	CAT. NO.	CAT. NO. (FOURNIER)	MANUFACTURER
SE501	1	SWIVEL ELBOW 90 1/4" TUBE 1/4" THREAD	D6069-4B	DOM-D6069-4BKP	DOMINION FITTING
SE502	1	SWIVEL ELBOW 90 1/4" TUBE 1/4" THREAD	D6069-4B	DOM-D6069-4BKP	DOMINION FITTING
SE503	1	SWIVEL ELBOW 90 1/4" TUBE 1/4" THREAD	D6069-4B	DOM-D6069-4BKP	DOMINION FITTING
SE504	1	SWIVEL ELBOW 90 1/4" TUBE 1/4" THREAD	D6069-4B	DOM-D6069-4BKP	DOMINION FITTING
TB-24V	1	GROUP MARKER FOR END BRACKET CLIPFIX 35, HEIGHT-ADJUSTABLE, GRAY	0811969	PHO-0811969KE	PHOENIX CONTACT
	4	PTTB4, PUSH-IN TERMINAL, 2 LEVELS, 28A, GREY, 10-24 AWG	3211786	PHO-3211786KE	PHOENIX CONTACT
	1	PTTB4 PARTITION PLATE, GREY, (D-STTB4)	3030462	PHO-3030462KE	PHOENIX CONTACT
TB-COM	1	GROUP MARKER FOR END BRACKET CLIPFIX 35, HEIGHT-ADJUSTABLE, GRAY	0811969	PHO-0811969KE	PHOENIX CONTACT
	4	PTTB4, PUSH-IN TERMINAL, 2 LEVELS, 28A, GREY, 10-24 AWG	3211786	PHO-3211786KE	PHOENIX CONTACT
	1	PTTB4 PARTITION PLATE, GREY, (D-STTB4)	3030462	PHO-3030462KE	PHOENIX CONTACT
TB-INTER	1	GROUP MARKER FOR END BRACKET CLIPFIX 35, HEIGHT-ADJUSTABLE, GRAY	0811969	PHO-0811969KE	PHOENIX CONTACT
	6	PTTB4, PUSH-IN TERMINAL, 2 LEVELS, 28A, GREY, 10-24 AWG	3211786	PHO-3211786KE	PHOENIX CONTACT
	1	PTTB4 PARTITION PLATE, GREY, (D-STTB4)	3030462	PHO-3030462KE	PHOENIX CONTACT
TB-LC	1	END BRACKET, CLIPFIX 35, GREY	3022218	PHO-3022218KE	PHOENIX CONTACT
	1	GROUP MARKER FOR END BRACKET CLIPFIX 35, HEIGHT-ADJUSTABLE, GRAY	0811969	PHO-0811969KE	PHOENIX CONTACT
	4	PT 2,5-3L, SPRING CAGE TERMINAL, 3 LEVELS, 20A, 12-26 AWG, GREY	3210499	PHO-3210499KE	PHOENIX CONTACT
	1	PT 2.5-3L, PARTITION PLATE, 3 LEVELS, GREY	3211647	PHO-3211647KE	PHOENIX CONTACT
TE501	1	UNION TEE 1/4" X 1/4" X 1/4" TUBE	D6064-4	DOM-D6064-4KP	DOMINION FITTING
TE502	1	UNION TEE 1/4" X 1/4" X 1/4" TUBE	D6064-4	DOM-D6064-4KP	DOMINION FITTING
TE503	1	UNION TEE 1/4" X 1/4" X 1/4" TUBE	D6064-4	DOM-D6064-4KP	DOMINION FITTING
VT501	1	VALVE TERMINALS, 24VDC, 25PIN DSUB, 1/4 PORTS, MODULES - K (2), M (1)	34P-MS1-SGUGKLGAL-3AU-KKM+HDD	FES-13112521	FESTO
	2	PUSH-IN FITTING FOR MPA-L VALVE TERMINAL	QB-1/4-1/4-U-M	FES-533219KE	FESTO

NOT TO BE USED FOR INSTALLATION
USE REV 2.X
(FOR CONSTRUCTION)

Notes générales / General notes

Rev.	Description	Date	Dessiné / Drawn
0.0	FOR APPROVAL	04/07/2023	D. MARTEL

LES INDUSTRIES FOURNIER INC.
FOURNIER INDUSTRIES INC.
3787 BOUL. FRONTENAC OUEST
THETFORD MINES, QUÉBEC, CANADA, G6H 2B5

CE DESSIN ET TOUTES LES INFORMATIONS QU'IL CONTIENT SONT LA PROPRIÉTÉ EXCLUSIVE DE LES INDUSTRIES FOURNIER INC. IL EST STRICTEMENT INTERDIT DE COMMUNIQUER OU UTILISER SON CONTENU À D'AUTRES FINS QUE CELLES PERMISES ORIGINALEMENT OU POUVANT ÊTRE PRÉJUDICIABLES AUX INTÉRÊTS DE LES INDUSTRIES FOURNIER INC. TOUTE REPRODUCTION DE CE DESSIN EST INTERDITE ET IL DOIT ÊTRE RETOURNÉ SUR DEMANDE.

THIS DRAWING AND ALL THE INFORMATION IT CONTAINS ARE THE EXCLUSIVE PROPERTY OF FOURNIER INDUSTRIES INC. IT IS STRICTLY FORBIDDEN TO COMMUNICATE OR USE THE INFORMATION FOR PURPOSES OTHER THAN THE ORIGINAL INTENDED ONES OR IF THE USE COULD BE HARMFUL TO THE INTERESTS OF FOURNIER INDUSTRIES INC. THIS DRAWING IN WHOLE OR IN PART MAY NOT BE REPRODUCED IN ANY FASHION AND HAS TO BE RETURNED TO FOURNIER INDUSTRIES INC. UPON REQUEST.

Sceau / Stamp

Créer par / Created by	D. MARTEL
Vérifié / Checked	G. ARCAND
Approuvé / Approuved	M.-A. TURGEON
Date de création / Creation date	16/06/2023
Échelle / Scale	

WINNIPEG, MB

2 X ROTARY PRESS 3(4)-900/4000CVP

ROTARY PRESS 2 - JB
LIST OF MATERIAL

No Projet / Project No.	No Dessin/ Drawing No.	Revision
2023-11911	D- 23-8460 - 501	0.0

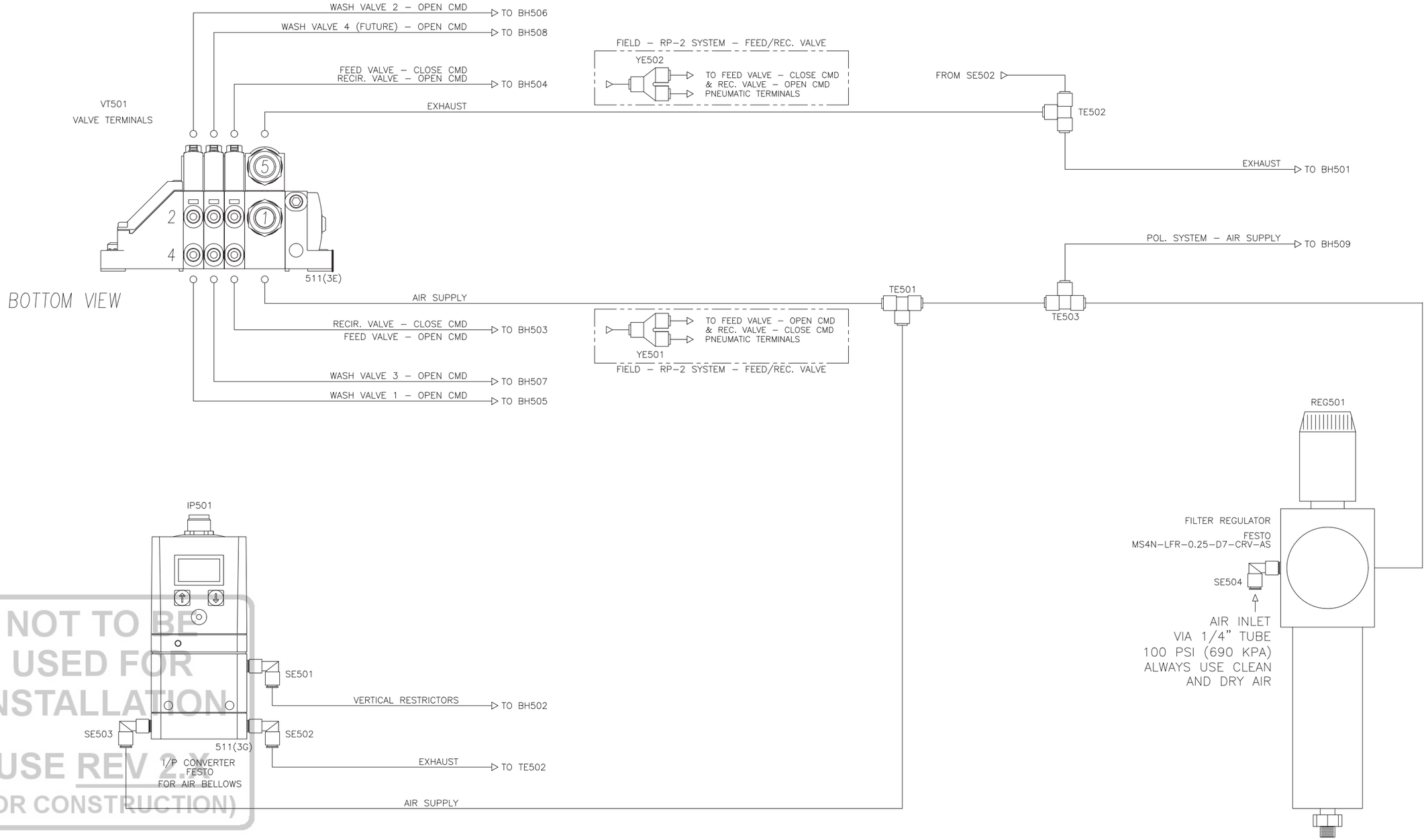

NOT TO BE USED FOR INSTALLATION
USE REV 2.X
(FOR CONSTRUCTION)

Notes générales / General notes

Rev.	Description	Date	Dessiné / Drawn
0.0	FOR APPROVAL	04/07/2023	D. MARTEL

LES INDUSTRIES FOURNIER INC.
FOURNIER INDUSTRIES INC.
3787 BOUL. FRONTENAC OUEST
THETFORD MINES, QUÉBEC, CANADA, G6H 2B5

CE DESSIN ET TOUTES LES INFORMATIONS QU'IL CONTIENT SONT LA PROPRIÉTÉ EXCLUSIVE DE LES INDUSTRIES FOURNIER INC. IL EST STRICTEMENT INTERDIT DE COMMUNIQUER OU UTILISER SON CONTENU À D'AUTRES FINS QUE CELLES PERMISES ORIGINALEMENT OU POUVANT ÊTRE PRÉJUDICIABLES AUX INTÉRÊTS DE LES INDUSTRIES FOURNIER INC. TOUTE REPRODUCTION DE CE DESSIN EST INTERDITE ET IL DOIT ÊTRE RETOURNÉ SUR DEMANDE.

THIS DRAWING AND ALL THE INFORMATION IT CONTAINS ARE THE EXCLUSIVE PROPERTY OF FOURNIER INDUSTRIES INC. IT IS STRICTLY FORBIDDEN TO COMMUNICATE OR USE THE INFORMATION FOR PURPOSES OTHER THAN THE ORIGINAL INTENDED ONES OR IF THE USE COULD BE HARMFUL TO THE INTERESTS OF FOURNIER INDUSTRIES INC. THIS DRAWING IN WHOLE OR IN PART MAY NOT BE REPRODUCED IN ANY FASHION AND HAS TO BE RETURNED TO FOURNIER INDUSTRIES INC. UPON REQUEST.

Sceau / Stamp

Créer par / Created by	D. MARTEL
Vérifié / Checked	G. ARCAND
Approuvé / Approuved	M.–A. TURGEON
Date de création / Creation date	16/06/2023
Échelle / Scale	

WINNIPEG, MB

2 X ROTARY PRESS 3(4)–900/4000CVP

ROTARY PRESS 2 – JB
PNEUMATIC ARRANGEMENT

No Projet / Project No.	No Dessin/ Drawing No.	Revision
2023-11911	D - 23-8460 - 510	0.0

CB5-2
from 211(6G)
24 VDC
24 VDC POWER SUPPLY
C-2
from 211(7G)
COM
TO EMERGENCY STOP SAFETY RELAY
from 212(2D)
from 212(1D)
212-03
212-04
TB-INTER
1
2
CONTROL PANEL
LOCATED ON THE ROTARY PRESS MOTOR
EMERGENCY STOP
HSS-P33229
EMERGENCY STOP JB
IP501
I/P CONVERTER FOR AIR BELLOWS
FESTO
VPPE-3-1-1/8-6-420-E1
CBL-500
CB5-2
TB-24V
24V
I/P CONVERTER CABLE
BN
POWER +24VDC
POWER
C-2
TB-COM
C
BU
POWER : 0VDC
AIR PRESSURE CONTROL
from 218(3H)
A0202-0+
TB-INTER
109
BK
ANALOG INPUT +
SIGNALS
from 218(3G)
A0202-0-
110
WH
ANALOG INPUT -
DISCRETE OUTPUT
5
NOT CONNECTED
* NOTE 1
218(4H),220(2E),510(2D)
LOW AIR PRESSURE
from 218(3G)
from 220(2E)
220-21
108
GY
VT501
VALVE TERMINALS
FESTO
34P-MS1-SGUGKLGAL-3AU-KKM+HDD
CBL-501
WASH VALVE #1 (XV-P33221) OPEN CMD
from 225(7G)
225-101
101
VALVE TERMINALS CABLE
WH
COIL 0 WASH VALVE #1
WASH VALVE #2 (XV-P33223) OPEN CMD
from 225(7G)
225-102
102
BN
COIL 1 WASH VALVE #2
WASH VALVE #3 (XV-P33225) OPEN CMD
from 225(7F)
225-103
103
GN
COIL 2 WASH VALVE #3
WASH VALVE #4 (XV-P33227) (FUTURE) OPEN CMD
from 225(7F)
225-104
104
YE
COIL 3 WASH VALVE #4
FEED/REC. VALVE (XV-P33217/8) OPEN CMD
from 225(7H)
225-100
150
GY
COIL 4 FEED/REC. VALVE
CONTROL PANEL
14 15 16 17 18 19 20 21 22 23 24 25
1 2 3 4 5 6 7 8 9 10 11 12 13
C-2
TB-COM
C
WH-BK
25
0V COMMON
510(2F)
COM to 511(6H)
C-2
24 VDC to 511(6H)
CB5-2
NOT TO BE USED FOR INSTALLATION
USE REV 2.X
(FOR CONSTRUCTION)
CB5-2
from 511(1B)
24 VDC
C-2
from 511(1B)
COM
CAKE DETECTION
from 220(2E)
CONTROL PANEL
CB5-2
C-2
220-20
TB-24V
24V
TB-COM
C
TB-INTER
107
YC-P33222
W-YCP33222-C1
CAKE DETECTOR 1 CONTROL CABLE
BN
BU
BK
CAKE DETECTION - CH #1
SCHNEIDER ELECTRIC XT218A1PCM12
YC-P33224
W-YCP33224-C1
CAKE DETECTOR 2 CONTROL CABLE
CAKE DETECTION - CH #2
SCHNEIDER ELECTRIC XT218A1PCM12
YC-P33226
W-YCP33226-C1
CAKE DETECTOR 3 CONTROL CABLE
CAKE DETECTION - CH #3
SCHNEIDER ELECTRIC XT218A1PCM12
CAKE DETECTION ROTARY PRESS CHANNEL #4 (YC-P33228) (FUTURE)
ROTARY PRESS 2
COM to 512(1H)
C-2
24 VDC to 512(1H)
CB5-2

Notes générales / General notes

NOTE 1:
CABLE SHIELDING MUST STAY UNCONNECTED ON THIS SIDE.

Rev.	Description	Date	Dessiné / Drawn
0.0	FOR APPROVAL	04/07/2023	D. MARTEL

CE DESSIN ET TOUTES LES INFORMATIONS QU'IL CONTIENT SONT LA PROPRIÉTÉ EXCLUSIVE DE LES INDUSTRIES FOURNIER INC. IL EST STRICTEMENT INTERDIT DE COMMUNIQUER OU UTILISER SON CONTENU À D'AUTRES FINS QUE CELLES PERMISES ORIGINALEMENT OU POUVANT ÉTRE PRÉJUDICIABLES AUX INTÉRÊTS DE LES INDUSTRIES FOURNIER INC. TOUTE REPRODUCTION DE CE DESSIN EST INTERDITE ET IL DOIT ÊTRE RETOURNÉ SUR DEMANDE.

THIS DRAWING AND ALL THE INFORMATION IT CONTAINS ARE THE EXCLUSIVE PROPERTY OF FOURNIER INDUSTRIES INC. IT IS STRICTLY FORBIDDEN TO COMMUNICATE OR USE THE INFORMATION FOR PURPOSES OTHER THAN THE ORIGINAL INTENDED ONES OR IF THE USE COULD BE HARMFUL TO THE INTERESTS OF FOURNIER INDUSTRIES INC. THIS DRAWING IN WHOLE OR IN PART MAY NOT BE REPRODUCED IN ANY FASHION AND HAS TO BE RETURNED TO FOURNIER INDUSTRIES INC. UPON REQUEST.

LES INDUSTRIES FOURNIER INC.
FOURNIER INDUSTRIES INC.
3787 BOUL. FRONTENAC OUEST
THETFORD MINES, QUÉBEC, CANADA, G6H 2B5

Sceau / Stamp

Créer par / Created by	D. MARTEL
Vérifié / Checked	G. ARCAND
Approuvé / Approuved	M.-A. TURGEON
Date de création / Creation date	16/06/2023
Échelle / Scale	

WINNIPEG, MB
2 X ROTARY PRESS 3(4)-900/4000CVP

ROTARY PRESS 2 - JB
ELECTRICAL ARRANGEMENT - (1 OF 2)

No Projet / Project No.	No Dessin/ Drawing No.	Revision
2023-11911	D- 23-8460 - 511	0.0

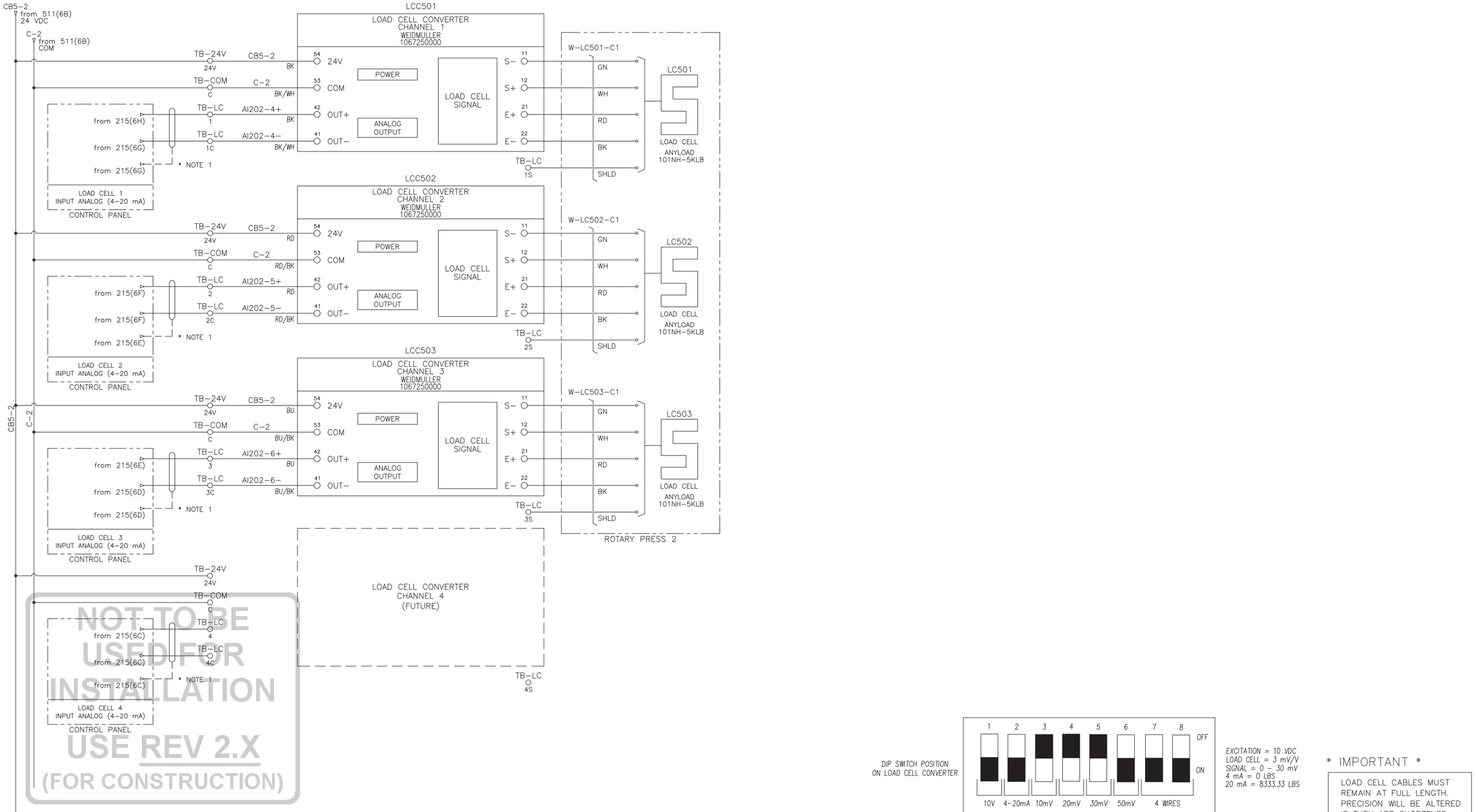

Notes générales / General notes

NOTE 1:
CABLE SHIELDING MUST STAY UNCONNECTED ON THIS SIDE.

Rev.	Description	Date	Dessiné / Drawn
0.0	FOR APPROVAL	04/07/2023	D. MARTEL

Fournier
LES INDUSTRIES FOURNIER INC.
FOURNIER INDUSTRIES INC.
3787 BOUL. FRONTENAC OUEST
THETFORD MINES, QUÉBEC, CANADA, G6H 2B5

CE DESSIN ET TOUTES LES INFORMATIONS QU'IL CONTIENT SONT LA PROPRIÉTÉ EXCLUSIVE DE LES INDUSTRIES FOURNIER INC. IL EST STRICTEMENT INTERDIT DE COMMUNIQUER OU UTILISER SON CONTENU À D'AUTRES FINS QUE CELLES PERMISES ORIGINALEMENT OU POUVANT ÊTRE PRÉJUDICIABLES AUX INTÉRÊTS DE LES INDUSTRIES FOURNIER INC. TOUTE REPRODUCTION DE CE DESSIN EST INTERDITE ET IL DOIT ÊTRE RETOURNÉ SUR DEMANDE.

THIS DRAWING AND ALL THE INFORMATION IT CONTAINS ARE THE EXCLUSIVE PROPERTY OF FOURNIER INDUSTRIES INC. IT IS STRICTLY FORBIDDEN TO COMMUNICATE OR USE THE INFORMATION FOR PURPOSES OTHER THAN THE ORIGINAL INTENDED ONES OR IF THE USE COULD BE HARMFUL TO THE INTERESTS OF FOURNIER INDUSTRIES INC. THIS DRAWING IN WHOLE OR IN PART MAY NOT BE REPRODUCED IN ANY FASHION AND HAS TO BE RETURNED TO FOURNIER INDUSTRIES INC. UPON REQUEST.

Sceau / Stamp

Créer par / Created by	D. MARTEL
Vérifié / Checked	G. ARCAND
Approuvé / Approuved	M.-A. TURGEON
Date de création / Creation date	16/06/2023
Échelle / Scale	

WINNIPEG, MB

2 X ROTARY PRESS 3(4)-900/4000CVP

ROTARY PRESS 2 - JB
ELECTRICAL ARRANGEMENT - (2 OF 2)

No Projet / Project No.	No Dessin/ Drawing No.	Revision
2023-11911	D- 23-8460 - 512	0.0

GRAVOPLY
DIMENSION 1-3/4" X 5/8" X 1/16''
BLACK LETTER ON WHITE BACKGROUND
ADHESIVE TYPE
TEXT HEIGHT 1/8"

OFF HAND AUTO	x4
RUNNING	x4
FAULT	x4
SPEED CONTROL	x4
MASTER CONTROL RESET	x1
EQUIPMENT FAULT	x1
MAINTENANCE WARNING	x1
POWER ON	x1
UPS – POWER ON	x1

GRAVOPLY
DIMENSION 3" X 5/8" X 1/16''
BLACK LETTER ON WHITE BACKGROUND
ADHESIVE TYPE
TEXT HEIGHT 3/16"

ROTARY PRESS 1	x1
ROTARY PRESS 2	x1
FLOCCULATOR 1	x1
FLOCCULATOR 2	x1

GRAVOPLY
DIMENSION 100mm X 35mm X 3mm
BLACK LETTER ON WHITE BACKGROUND
ADHESIVE TYPE
TEXT HEIGHT 5mm

LCP-3110A	x1
LCP-3110B	x1

NOT TO BE USED FOR INSTALLATION

USE REV 2.X
(FOR CONSTRUCTION)

Notes générales / General notes

Rev.	Description	Date	Dessiné / Drawn
0.0	FOR APPROVAL	04/07/2023	D. MARTEL

LES INDUSTRIES FOURNIER INC.
FOURNIER INDUSTRIES INC.
3787 BOUL. FRONTENAC OUEST
THETFORD MINES, QUÉBEC, CANADA, G6H 2B5

CE DESSIN ET TOUTES LES INFORMATIONS QU'IL CONTIENT SONT LA PROPRIÉTÉ EXCLUSIVE DE LES INDUSTRIES FOURNIER INC. IL EST STRICTEMENT INTERDIT DE COMMUNIQUER OU UTILISER SON CONTENU À D'AUTRES FINS QUE CELLES PERMISES ORIGINALEMENT OU POUVANT ÊTRE PRÉJUDICIABLES AUX INTÉRÊTS DE LES INDUSTRIES FOURNIER INC. TOUTE REPRODUCTION DE CE DESSIN EST INTERDITE ET IL DOIT ÊTRE RETOURNÉ SUR DEMANDE.

THIS DRAWING AND ALL THE INFORMATION IT CONTAINS ARE THE EXCLUSIVE PROPERTY OF FOURNIER INDUSTRIES INC. IT IS STRICTLY FORBIDDEN TO COMMUNICATE OR USE THE INFORMATION FOR PURPOSES OTHER THAN THE ORIGINAL INTENDED ONES OR IF THE USE COULD BE HARMFUL TO THE INTERESTS OF FOURNIER INDUSTRIES INC. THIS DRAWING IN WHOLE OR IN PART MAY NOT BE REPRODUCED IN ANY FASHION AND HAS TO BE RETURNED TO FOURNIER INDUSTRIES INC. UPON REQUEST.

Sceau / Stamp

Créer par / Created by	D. MARTEL
Vérifié / Checked	G. ARCAND
Approuvé / Approuved	M.-A. TURGEON
Date de création / Creation date	16/06/2023
Échelle / Scale	

WINNIPEG, MB
2 X ROTARY PRESS 3(4)-900/4000CVP

MISC
LEGEND PLATES

No Projet / Project No.	No Dessin/ Drawing No.	Revision
2023-11911	D- 23-8460 - 1000	0.0

Section 3

Technical datasheets

Technical datasheets

#		Description
Anyload		
01	101NH-5KLB	S type Load cell, 5000lbs, CE
Endress & Hauser		
02	5WBB25-CPDADBJA0DQA120AA1	FLOWMETER 1", SUPPLY 24VDC 4-20MA HART, WITH LCD CSA US APPROUVED
03	5WBB80-CPDADBJA0DUA120AA1	FLOWMETER 3", SUPPLY 24VDC 4-20MA HART, WITH LCD CSA US APPROUVED
04	PMC71B-CABADJH6A3KFA1VXJD	PRESSION TRANSMITTER 30 PSI, 4-20MA HART WITH LCD CSA US APPROUVED
Festo		
05	MS4N-LFR-0-25-D7-CRV-AS	AIR FILTER REGULATOR
06	13117330 (NC) - 13117331 (NO)	OUTLET CONTROL VALVES TEFLON FUSED BALL Ø3" CLASS 125# FLANGED VALVE ONE VALVE NORMALLY OPENED, ONE VALVE NORMALLY
07	13117333	CHANNEL WASH WATER VALVE C.F.F. STAINLESS STEELS DFPD-20-RP-90-RS30-F04 Ø1", NPT
08	VPPE-3-1-18-6-420-E1	PRESSURE REGULATOR 0-87 PSI (6 BARS) 24VDC - INPUT 4 -20MA - OUTPUT PNP
09	34P-MS1-SGUGKLGAL-3AU-KKM+HDD	VALVES TERMINALS 24VDC, 25PIN DSUB, 1/4 PORTS, K(2) + M(1) MODULES
Fournier Industries inc.		
10	POLYSYS-1/2-120V-Duplex	LIQUID POLYMER SYSTEM 1/2 WATER FLOW RANGE 0.4 - 7.93 GPM (90 - 1800 LPH) 120V POWER SUPPLY, 4-20 mA with 24V relay POLYMER FLOW 0.001 - 7.93 USGPH(0.1 - 500 ml/min)

100mm

Technical datasheets

#		Description
Hoffman		
11	N280416G050	AIR CONDITIONER 4000 BTU 115VAC INDOOR
Nord Gear		
12	SK0282.1 AXFBH-80LP/4 M4 575V 361 RPM	GEARMOTOR 1 HP, 575V, M4, 361 RPM OIL SIGHT GLASS, MAGNETIC DRAIN PLUG PREMIUM EFFICIENCY
Phoenix Contact		
13	2905908	UPS, TRIO, 750 VA 120 VAC INPUT, 120 VAC 6A OUTPUT
Schneider electric		
14	XT218A1PCM12	PROXIMITY SENSOR CAPACITIVE PNP 24VDC 8 MM OF DETECTION WITH M12 CONNECTOR
15	HMIGTO5310	OPERATOR INTERFACE, MAGELIS GTO, 640 X 480 10.4 IN. TOUCH, COLOR, 24VDC
16	BME P58 2020	MODICON X80, PLC M580
17	BMX AMI 0810	MODICON X80, ANALOG INPUT MODULE 8PT
18	BMX AMO 0802	MODICON X80, ANALOG OUTPUT MODULE 8PT
19	BMX CPS 3500	MODICON X80, POWER SUPPLY 24VDC, 36W
20	BMX DDI 3202K	MODICON X80, 24VDC DISCRETE IN MODULE 32PT
21	BMX DDO 1602	MODICON X80, 24VDC DISCRETE OUT MODULE 16PT
22	BMX XBP 1200	MODICON X80, RACK, 12 SLOTS
23	ATV320U07S6C	ATV320, 600V, 3PH, 1HP HD
24	ATV930D15S6X	ATV930, 600V, 3PH, 20HP, 15HP HD

is this cake detector

Technical datasheets

#		Description
Sew Eurodrive		
25	M5RSF60 (ratio 1098) 4 Channel	GEAR REDUCER GEAR RATIO 1098:1 POSITION M1 4 CHANNEL
Teco Westinghouse		
26	PDH01545C (15HP, 575V, 1800 RPM)	ELECTRICAL MOTOR 15 HP, 575 V, 254TC, 1800 RPM C-FLANGE, INVERTER DUTY 10:1 CLASS1, DIVISION 2, PREMIUM EFFICIENCY

Technical DataSheets

Description :
S type Load cell, 5000lbs, CE

Trade Name :
Anyload

Model no :
101NH-5KLB

101NH

Alloy Steel

Capacity:50-500lb

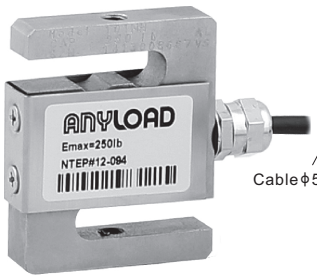

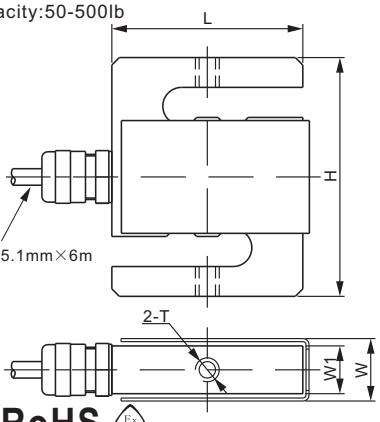

Capacity:750lb-20Klb

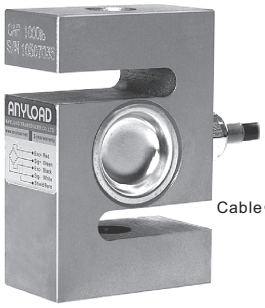

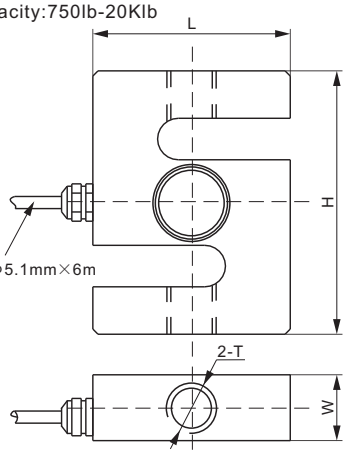

RATED CAPACITY	DIMENSIONS H	L	W	W1	T	Shipping Weight(kg)
lb/inches						
50–250	2.50	2.00	0.65	0.50	1/4–28 UNF–2B	0.6
500	3.00	2.00	0.89	0.75	1/2–20 UNF–2B	0.7
750–3,000	3.00	2.00	1.11	–	1/2–20 UNF–2B	0.9
5,000; 10,000	4.00	3.00	1.00	–	3/4–16 UNF–2B	1.5
15,000	5.50	4.00	1.25	–	1–14 UNS–2B	3.0
20,000	7.00	4.92	2.00	–	$1\frac{1}{4}$–12 UNF–2B	6.8

SPECIFICATIONS

Full Scale Output	3.0 mV/V ± 1%	**Recommended Excitation**	10V (15V Maximum)
Zero Balance	± 0.02 mV/V	**Insulation Resistance**	>2 [50V DC] GΩ
Non-linearity	< ± 0.017%	**Compensated Temperature Range**	-10°C to 50°C / 14°F to 122°F
Repeatability	< ± 0.017%	**Safe Overload**	150% of full scale
Hysteresis Error	< ± 0.017%	**Breaking Overload**	300% of full scale
Creep in 30 min.	< ± 0.023%	**Seal Type / IP Rating**	Cap.≤500lb:Environmentally Sealed / IP66
Input Resistance	350Ω ± 7		Cap.≥750lb:Environmentally Sealed / IP67
Output Resistance	350Ω ± 3	**Cable Color Code**	Exc+ Red Exc- Black
Element Material	Alloy Steel, Nickel Plated		Sig+ Green Sig- White Shield Bare

Rated Capacity	Width / Height	Part Number*	INTERCHANGEABLE REFERENCE						
			Coti-Global		Rice Lake		Vishay		
							Celtron	Revere	Sensortronics
			CGSB	CGSB-1	RL20000	RL20001	STC	363	60001
50lb	W:0.65" (H:2.5")	101NH-50lb	W:0.75"	W:0.75"	W:0.75"			(H:2.4?)	
100lb	W:0.65" (H:2.5")	101NH-100lb	W:0.75"	W:0.75"	W:0.75"			(H:2.4?)	
200lb	W:0.65" (H:2.5")	101NH-200lb	W:0.75"	W:0.75"	W:0.75"			(H:2.4?)	
250lb	W:0.65" (H:2.5") (L:2") (T: 1/4-28 UNF-2B)	101NH-250lb	W:0.75" (H:3") (T: 3/8-24 UNF-2B)	W:0.75"	W:0.75"	W: 0.75" (L: 3") (T: 3/8-24 UNF-2B)	W: 1.05" (H: 3") (T: 3/8-24 UNF-2B)	(H:2.4?)	W: 0.75" (H: 3") (T: 3/8-24 UNF-2B)
500lb	W:0.89" (H:3")	101NH-500lb	W:1.00"	W:1.00" (H:2.5")	W:1.00" (H:2.5")	W:1.00"	W:1.2"	W:0.9" (H:2.4")	W:1.00"
750lb	W:1.11" (H:3")	101NH-750lb	W:1.00"	W:1.00" (H:2.5")	W:1.00" (H:2.5")	W:1.00"	W:1.2"	W:0.9" (H:2.4")	W:1.00"
1Klb	W:1.11" (H:3")	101NH-1Klb	W:1.00"	W:1.00" (H:2.5")	W:1.00" (H:2.5")	W:1.00"	W:1.03"	W:0.9" (H:2.4")	W:1.00"
1.5Klb	W:1.11" (H:3")	101NH-1.5Klb	W:1.00"	W:1.00" (H:2.5")	W:1.00" (H:2.5")	W:1.00"	W:1.03"	W:0.9" (H:2.4")	W:1.00"
2Klb	W:1.11" (H:3")	101NH-2Klb	W:1.00"	W:1.00" (H:2.5")	W:1.25" (H:2.5")	W:1.00"	W:1.25"	W:1.15" (H:2.4")	W:1.00"
2.5Klb	W:1.11" (H:3") (L:2")	101NH-2.5Klb	W:1.00"	W:1.00" (H:2.5")	W:1.25" (H:2.5") (L:3")	W:1.25"	W:1.25"	W:1.15" (H:2.4")	W:1.25"
3Klb	W:1.11" (H:3") (L:2") (T: 1/2-20 UNF-2B)	101NH-3Klb	W:1.00"	W:1.0" (H:4.0") (L:3")	W:1.25" (H:4") (L:3")	W:1.25"	W:1.25"	W:1.15" (H:3.9") (T: 3/4-16 UNF-2B)	W:1.25"
5Klb	W:1" (H:4")	101NH-5Klb	(H:4.25?)		W:1.25"	W:1.25" (H:4.25")	W:1.25" (H:4.25")	W:1.15" (H:3.90")	W:1.25" (H:4.25")
10Klb	W:1" (H:4") (L:3")	101NH-10Klb	(H:4.75?)		W:1.25"	W:1.25" (H:4.75") (L:3.50")	W:1.25" (H:4.75") (L:3.50")	W:1.15" (H:3.90") (L:2.94")	W:1.25" (H:4.75") (L:3.50")
15Klb	W:1.25" (L:4") (T: 1-14 UNS-2B)	101NH-15Klb			W:1.5" (T:1-12 UNF)	W:1.50"	W:1.50"	W:1.65" (L:3.44")	W:1.50"
20Klb	W:2.0" (L:4.92")	101NH-20Klb	(L:5.00?)		W:2.25" (L:5.00")	W:2.25" (L:5.00")	W:2.19" (L:5.00")	W:1.88" (L:4.44")	W:2.25" (L:5.00")

100lb-500lb: NTEP 1:4 500 Class III, Single Cell; 1Klb-20Klb: NTEP 1:5 500 Class III, Single Cell

200kg-1.5t: OIML MAA C3, Y=17 000; 2t-10t: OIML MAA C4.5, Y=14 000

* ATEX, FM, IECEx approved versions carry the "-Ex" suffix.

© 2023 ANYLOAD V1 dimensions and specifications subject to change without notice

Technical DataSheets

Description :
FLOWMETER 1", SUPPLY 24VDC
4-20MA HART, WITH LCD
CSA US APPROUVED

Trade Name :
Endress & Hauser

Model no :
5WBB25-CPDADBJA0DQA120AA1

5WBB25-CPDADBJA0DQA120AA1

Proline Promag W 10 electromagnetic flowmeter

Flowmeter for basic water and wastewater applications with easy-to-use operation concept

More information and current pricing:
www.ca.endress.com/5WBB

Benefits:

- Reliable measurement at constant accuracy with 0 x DN inlet run without pressure loss
- Flexible engineering – sensor with fixed or lap-joint process connections
- Application fitness – EN ISO 12944 corrosion protection for underground or underwater installation
- Improved plant availability – sensor compliant with industry-specific requirements
- Optimum usability – operation with mobile devices and SmartBlue app or display with touch screen
- Simple, time-saving commissioning – guided parameterization in advance and in the field
- Integrated verification – Heartbeat Technology

Specs at a glance

- **Max. measurement error** Volume flow (standard): ±0.5 % o.r. ± 1 mm/s (0.04 in/s)
- **Measuring range** 9 dm³/min to 162 000 m³/h (2.5 gal/min to 100 000 gal/min)
- **Medium temperature range** Liner material hard rubber: 0 to +80 °C (+32 to +176 °F) Liner material polyurethane: –20 to +50 °C (–4 to +122 °F) Liner material PTFE: –20 to +90 °C (–4 to +160°F)
- **Max. process pressure** PN 40, Class 300, 20K
- **Wetted materials** Liner material hard rubber: 0 to +80 °C (+32 to +176 °F) Liner material polyurethane: –20 to +50 °C (–4 to +122

°F) Liner material PTFE: –20 to +90 °C (–4 to +160 °F) Electrodes: 1.4435 (316L); Alloy C22, 2.4602 (UNS N06022)

Field of application: Thanks to its international approvals (e.g. for drinking water), Promag W serves a wide variety of applications. It is available as both compact or remote version. With its straightforward hard- and software design, Promag W 10 simplifies every step in its life cycle from engineering to servicing at usual Endress+Hauser quality. Heartbeat Technology ensures measurement reliability and compliant verification.

Features and specifications

Liquids

Measuring principle

Electromagnetic

Product headline

Flowmeter for basic water and wastewater applications with easy-to-use operation concept.
Reliable measurement at constant accuracy with 0 x DN inlet run without pressure loss.
Suitable for elementary measurement tasks such as raw water intake.

Sensor features

Flexible engineering – sensor with fixed or lap-joint process connections. Application fitness – EN ISO 12944 corrosion protection for underground or underwater installation. Improved plant availability – sensor compliant with industry-specific requirements.
International drinking water approvals. Degree of protection IP68 (Type 6P enclosure). International drinking water approvals. Installation length: DVGW/ISO conform.

Liquids

Transmitter features

Optimum usability – operation with mobile devices and SmartBlue app or display with touch screen. Simple, time-saving commissioning – guided parameterization in advance and in the field. Integrated verification – Heartbeat Technology.
System integration with HART, Modbus RS485. Flexible operation with app and optional display.

Nominal diameter range

DN 25 to 2400 (1 to 90")

Wetted materials

Liner material hard rubber: 0 to +80 °C (+32 to +176 °F)
Liner material polyurethane: –20 to +50 °C (–4 to +122 °F)
Liner material PTFE: –20 to +90 °C (–4 to +160 °F)
Electrodes: 1.4435 (316L); Alloy C22, 2.4602 (UNS N06022)

Measured variables

Volume flow, conductivity, mass flow

Max. measurement error

Volume flow (standard): ±0.5 % o.r. ± 1 mm/s (0.04 in/s)

Measuring range

9 dm^3/min to 162 000 m^3/h (2.5 gal/min to 100 000 gal/min)

Max. process pressure

PN 40, Class 300, 20K

Medium temperature range

Liner material hard rubber: 0 to +80 °C (+32 to +176 °F)
Liner material polyurethane: –20 to +50 °C (–4 to +122 °F)
Liner material PTFE: –20 to +90 °C (–4 to +160°F)

Ambient temperature range

-40 to 60°C (-40 to 140°F)

Liquids

Sensor housing material
DN 25 to 300 (1 to 12"): AlSi10Mg, coated
DN 350 to 2000 (14 to 78"): Carbon steel with protective varnish

Transmitter housing material
Polycarbonat; AlSi10Mg, coated

Degree of protection
Compact version: IP66/67, type 4X enclosure
Sensor remote version (standard): IP66/67, type 4X enclosure
Sensor remote version (option): IP68, type 6P enclosure, with protective varnish according to EN ISO 12944 C5-M/Im1/Im2/Im3

Display/Operation
LCD display with touch & auto rotate

Outputs
4-20 mA HART (active/passive), Pulse/frequency/switch output
Modbus RS485, 4-20 mA

Digital communication
HART, MODBUS RS485

Power supply
DC 24 V
AC 100 to 230 V
AC 100 to 230 V / DC 24 V (non-hazardous area)

Hazardous area approvals
CSA, GP

Metrological approvals and certificates
Calibration performed on accredited calibration facilities (acc. to ISO/IEC 17025)
Heartbeat Technology complies with the requirements for measurement traceability according to ISO 9001:2015 – Section 7.1.5.2 a (TÜV SÜD attestation)

Liquids

Pressure approvals and certificates
CRN, PED

Material certificates
3.1 material

Hygienic approvals and certificates
Drinking water approvals: ACS, KTW/W270, NSF 61, WRAS BS 6920

More information **www.ca.endress.com/5WBB**

Configuration summary

Mat. no.	Description Order code	Quantity	Unit
71430103	Promag W 10, 5WBB25, DN25 1" 5WBB25-CPDADBJA0DQA120AA1	1	ST

Details

Curr. output 1	Volume flow	
Current span	4...20 mA US	
4 mA value	0	USgal/min
20 mA value	18	USgal/min
Failsafe mode current output	Max.	
Damping output 1	1	s
Value 1 display	Volume flow	
Value 2 display	None	
Value 3 display	None	
Value 4 display	None	
Display damping	1	s
Totalizer 1		
Unit	USgal	
Operating mode totalizer	Net flow total	
Failure mode	Stop	
Totalizer 2		
Unit	USgal	
Operating mode totalizer	Forward flow total	
Failure mode	Stop	
Totalizer 3		
Unit	USgal	
Operating mode totalizer	Reverse flow total	
Failure mode	Stop	

010	Approval; Transmitter + Sensor:	CP	CSA C/US; GP
011	Design:	D	Lap joint flange
013	Functionality:	A	Standard transmitter
015	Power Supply:	D	24VDC
020	Output; Input:	B	4-20mA HART, pulse/freq./switch output
030	Display; Operation:	J	LCD, 2.40"; SmartBlue app
040	Housing:	A	Compact, alu, coated

045	Cable, Sensor Connection:	0	Not used
050	Electrical Connection:	D	Thread NPT1/2
060	Liner:	Q	PTFE 90oC
070	Process Connection:	A12	Cl.150, carbon steel, lap joint flange ASME B16.5
075	Electrodes:	0	1.4435/316L
080	Calibration Flow:	A	0.5%
480	Device Model:	A1	1

Description :
FLOWMETER 3", SUPPLY 24VDC
4-20MA HART, WITH LCD
CSA US APPROUVED

Trade Name :
Endress & Hauser

Model no :
5WBB80-CPDADBJA0DUA120AA1

5WBB80-CPDADBJA0DUA120AA1

Proline Promag W 10 electromagnetic flowmeter

Flowmeter for basic water and wastewater applications with easy-to-use operation concept

More information and current pricing:
www.ca.endress.com/5WBB

Benefits:

- Reliable measurement at constant accuracy with 0 x DN inlet run without pressure loss
- Flexible engineering – sensor with fixed or lap-joint process connections
- Application fitness – EN ISO 12944 corrosion protection for underground or underwater installation
- Improved plant availability – sensor compliant with industry-specific requirements
- Optimum usability – operation with mobile devices and SmartBlue app or display with touch screen
- Simple, time-saving commissioning – guided parameterization in advance and in the field
- Integrated verification – Heartbeat Technology

Specs at a glance

- **Max. measurement error** Volume flow (standard): ±0.5 % o.r. ± 1 mm/s (0.04 in/s)
- **Measuring range** 9 dm³/min to 162 000 m³/h (2.5 gal/min to 100 000 gal/min)
- **Medium temperature range** Liner material hard rubber: 0 to +80 °C (+32 to +176 °F) Liner material polyurethane: –20 to +50 °C (–4 to +122 °F) Liner material PTFE: –20 to +90 °C (–4 to +160°F)
- **Max. process pressure** PN 40, Class 300, 20K
- **Wetted materials** Liner material hard rubber: 0 to +80 °C (+32 to +176 °F) Liner material polyurethane: –20 to +50 °C (–4 to +122

°F) Liner material PTFE: –20 to +90 °C (–4 to +160 °F) Electrodes: 1.4435 (316L); Alloy C22, 2.4602 (UNS N06022)

Field of application: Thanks to its international approvals (e.g. for drinking water), Promag W serves a wide variety of applications. It is available as both compact or remote version. With its straightforward hard- and software design, Promag W 10 simplifies every step in its life cycle from engineering to servicing at usual Endress+Hauser quality. Heartbeat Technology ensures measurement reliability and compliant verification.

Features and specifications

Liquids

Measuring principle

Electromagnetic

Product headline

Flowmeter for basic water and wastewater applications with easy-to-use operation concept.
Reliable measurement at constant accuracy with 0 x DN inlet run without pressure loss.
Suitable for elementary measurement tasks such as raw water intake.

Sensor features

Flexible engineering – sensor with fixed or lap-joint process connections. Application fitness – EN ISO 12944 corrosion protection for underground or underwater installation. Improved plant availability – sensor compliant with industry-specific requirements.
International drinking water approvals. Degree of protection IP68 (Type 6P enclosure). International drinking water approvals. Installation length: DVGW/ISO conform.

Liquids

Transmitter features

Optimum usability – operation with mobile devices and SmartBlue app or display with touch screen. Simple, time-saving commissioning – guided parameterization in advance and in the field. Integrated verification – Heartbeat Technology.
System integration with HART, Modbus RS485. Flexible operation with app and optional display.

Nominal diameter range

DN 25 to 2400 (1 to 90")

Wetted materials

Liner material hard rubber: 0 to +80 °C (+32 to +176 °F)
Liner material polyurethane: –20 to +50 °C (–4 to +122 °F)
Liner material PTFE: –20 to +90 °C (–4 to +160 °F)
Electrodes: 1.4435 (316L); Alloy C22, 2.4602 (UNS N06022)

Measured variables

Volume flow, conductivity, mass flow

Max. measurement error

Volume flow (standard): ±0.5 % o.r. ± 1 mm/s (0.04 in/s)

Measuring range

9 dm^3/min to 162 000 m^3/h (2.5 gal/min to 100 000 gal/min)

Max. process pressure

PN 40, Class 300, 20K

Medium temperature range

Liner material hard rubber: 0 to +80 °C (+32 to +176 °F)
Liner material polyurethane: –20 to +50 °C (–4 to +122 °F)
Liner material PTFE: –20 to +90 °C (–4 to +160°F)

Ambient temperature range

-40 to 60°C (-40 to 140°F)

Liquids

Sensor housing material
DN 25 to 300 (1 to 12"): AlSi10Mg, coated
DN 350 to 2000 (14 to 78"): Carbon steel with protective varnish

Transmitter housing material
Polycarbonat; AlSi10Mg, coated

Degree of protection
Compact version: IP66/67, type 4X enclosure
Sensor remote version (standard): IP66/67, type 4X enclosure
Sensor remote version (option): IP68, type 6P enclosure, with protective varnish according to EN ISO 12944 C5-M/Im1/Im2/Im3

Display/Operation
LCD display with touch & auto rotate

Outputs
4-20 mA HART (active/passive), Pulse/frequency/switch output
Modbus RS485, 4-20 mA

Digital communication
HART, MODBUS RS485

Power supply
DC 24 V
AC 100 to 230 V
AC 100 to 230 V / DC 24 V (non-hazardous area)

Hazardous area approvals
CSA, GP

Metrological approvals and certificates
Calibration performed on accredited calibration facilities (acc. to ISO/IEC 17025)
Heartbeat Technology complies with the requirements for measurement traceability according to ISO 9001:2015 – Section 7.1.5.2 a (TÜV SÜD attestation)

Liquids

Pressure approvals and certificates
CRN, PED

Material certificates
3.1 material

Hygienic approvals and certificates
Drinking water approvals: ACS, KTW/W270, NSF 61, WRAS BS 6920

More information **www.ca.endress.com/5WBB**

Configuration summary

Mat. no.	Description Order code	Quantity	Unit
71430108	Promag W 10, 5WBB80, DN80 3" 5WBB80-CPDADBJA0DUA120AA1	1	ST

Details

Curr. output 1	Volume flow	
Current span	4...20 mA US	
4 mA value	0	USgal/min
20 mA value	200	USgal/min
Failsafe mode current output	Max.	
Damping output 1	1	s
Value 1 display	Volume flow	
Value 2 display	None	
Value 3 display	None	
Value 4 display	None	
Display damping	1	s
Totalizer 1		
Unit	USgal	
Operating mode totalizer	Net flow total	
Failure mode	Stop	
Totalizer 2		
Unit	USgal	
Operating mode totalizer	Forward flow total	
Failure mode	Stop	
Totalizer 3		
Unit	USgal	
Operating mode totalizer	Reverse flow total	
Failure mode	Stop	

010	Approval; Transmitter + Sensor:	CP	CSA C/US; GP
011	Design:	D	Lap joint flange
013	Functionality:	A	Standard transmitter
015	Power Supply:	D	24VDC
020	Output; Input:	B	4-20mA HART, pulse/freq./switch output
030	Display; Operation:	J	LCD, 2.40"; SmartBlue app
040	Housing:	A	Compact, alu, coated

045	Cable, Sensor Connection:	0	Not used
050	Electrical Connection:	D	Thread NPT1/2
060	Liner:	U	Polyurethane
070	Process Connection:	A12	Cl.150, carbon steel, lap joint flange ASME B16.5
075	Electrodes:	0	1.4435/316L
080	Calibration Flow:	A	0.5%
480	Device Model:	A1	1

Description :
PRESSION TRANSMITTER
30 PSI, 4-20MA HART WITH LCD
CSA US APPROUVED

Trade Name :
Endress & Hauser

Model no :
PMC71B-CABADJH6A3KFA1VXJD

PMC71B-CABADJH6A3KFA1VXJD

Cerabar PMC71B - pressure transmitter

Smart pressure transmitter which detects process anomalies like changes in the loop characteristics

F L E X

More information and current pricing:
www.ca.endress.com/PMC71B

Benefits:

- With Heartbeat Technology you are able to verify the health of the device while the process is running.
- Simple indication of device status - display changes from green to red when diagnostic messages occur
- Reduce systematic failures - error free SIL commissioning and instrument guided proof testing
- Wireless control of the device in hard to reach process areas with the SmartBlue App

Specs at a glance

- **Accuracy** Standard: up to 0.05 % Platinum: up to 0.025 %
- **Process temperature** -40°C...+150°C (-40°F...+302°F)
- **Pressure measuring range** 100 mbar...40 bar (1.5 psi...600 psi)
- **Main wetted parts** Ceraphire ceramic FKM, EPDM, HNBR, Perlast, Kalrez, Chemraz
- **Material process membrane** Ceramic

Field of application: This transmitter belongs to the new Cerabar generation. The device is robust and can be remotely controlled via app on a tablet using a secure Bluetooth connection. It allows condition based maintenance as well. The software is designed to simplify the handling. Intuitive wizards guide the user through setup, proof tests and verification of the device. Heartbeat Technology offers verification and monitoring functions to detect unwanted anomalies e.g. changes in loop characteristics.

Features and specifications

Continuous / Liquids

Measuring principle

Absolute and gauge pressure

Characteristic / Application

Premium accuracy pressure transmitter with dry ceramic cell.
Intuitive and clear wizards for commissioning, proof tests and verification.

Specialities

Heartbeat Technology,
Bluetooth® Operation and maintenance SmartBlue App,
LED Module,
RFID TAG for easy identification,
Plug and play functionalities,
HistoROM

Supply / Communication

Ex d, Ex e, non-Ex::
10.5...35V DC
Ex i: 10.5...30V DC

Accuracy

Standard:
up to 0.05 %
Platinum:
up to 0.025 %

Long term stability

0.05 % of URL/ year
0.08 % of URL/ 5 years
0.10 % of URL/ 10 years

Ambient temperature

-40°C...+85°C
(-40°F...+185°F)

Continuous / Liquids

Process temperature
-40°C...+150°C
(-40°F...+302°F)

Process pressure absolute / max. overpressure limit
60 bar (900 psi)

Pressure measuring range
100 mbar...40 bar
(1.5 psi...600 psi)

Main wetted parts
Ceraphire ceramic
FKM, EPDM, HNBR,
Perlast, Kalrez, Chemraz

Process connection
Thread:
G1/2...G2, R1/2, MNPT1/2...MNPT2, FNPT1/2
Flange:
DN25...DN80,
NPS 1"...4"

Max. measurement distance
400 m (1312 ft) H2O

Communication
4...20 mA HART

Certificates / Approvals
ATEX, IEC Ex, CSA C/US, NEPSI

Safety approvals
SIL

Design approvals
EN 10204-3.1

Continuous / Liquids

Drinking water approvals
NSF, KTW

Metrological approvals and certificates
MID

Options
Touch control display

Application limits
Measuring cell: ceramics
If pressurized, possibly use differential pressure measurement with two pressure transmitters (electronic dp). Observe ratio head pressure : hydrostatic pressure

Pressure

Measuring principle
Absolute and gauge pressure

Characteristic
Premium accuracy pressure transmitter with dry ceramic cell. Intuitive and clear wizards for commissioning, proof tests and verification.

Supply voltage
Ex d, Ex e, non-Ex:
10.5...35V DC
Ex i: 10.5...30V DC

Reference Accuracy
Standard:
up to 0.05 %
Platinum:
up to 0.025 %

Pressure

Long term stability
0.05 % of URL/ year
0.08 % of URL/ 5 years
0.10 % of URL/ 10 years

Process temperature
-40°C...+150°C
(-40°F...+302°F)

Ambient temperature
-40°C...+85°C
(-40°C...+185°F)

Measuring cell
100 mbar....40 bar
(1.5 psi...600 psi)

Smallest calibratable span
5 mbar (0.075 psi)

Vacuum resistance
0 mbar abs.

Max. Turn down
100:1

Max. overpressure limit
60 bar (900 psi)

Process connection
Thread:
G1/2...G2, R1/2, MNPT1/2...MNPT2, FNPT1/2
Flange:
DN25...DN80,
NPS 1"...4"

Material process membrane
Ceramic

Pressure

Material gasket
FKM, EPDM, HNBR, FFKM

Fill fluid
none, dry measuring cell

Material housing
Aluminium, 316L

Communication
4...20 mA HART

Certificates / Approvals
ATEX, IEC Ex, CSA C/US, NEPSI

Safety approvals
SIL

Design approvals
EN10204-3.1

Drinking water approvals
NSF, KTW

Specialities
Heartbeat Technology,
Bluetooth® Operation and maintenance SmartBlue App,
LED Module,
RFID TAG for easy identification,
Plug and play functionalities,
HistoROM

More information **www.ca.endress.com/PMC71B**

Configuration summary

Mat. no.	Description Order code	Quantity	Unit
71409434	Cerabar PMC71B PMC71B-CABADJH6A3KFA1VXJD	1	ST

010	Approval:	CA	CSA C/US General Purpose
020	Output:	BA	2-wire 4-20mA HART
030	Display; Operation:	D	Segment display w/o buttons + Bluetooth
040	Housing; Material:	J	Dual compartment; Alu, coated
050	Electrical Connection:	H	Thread NPT1/2, IP66/68 NEMA Type 4X/6P
055	Pressure Type:	6	Gauge
060	Application:	A	Standard
075	Sensor Range:	3K	2bar/200kPa/30psi
090	Calibration; Unit:	F	Sensor range; psi
105	Process Connection, Sealing Surface:	A1	Thread ASME B1.20.1, NPT
110	Process Connection:	VXJ	MNPT1/2 FNPT1/4, 316L
200	Seal:	D	FKM

Description :
AIR FILTER REGULATOR

Trade Name :
Festo

Model no :
MS4N-LFR-0-25-D7-CRV-AS

Filter Regulators MS4-LFR

Filter Regulators MS4N-LFR – Inch Series

A filter regulator combines a filter and a pressure regulator into a single unit. The sintered filter with water separator removes contamination, pipe sinter, rust and condensate from the compressed air. The pressure setting can be adjusted with the regulator.

- Pneumatic connection: ⅛ NPT, ¼ NPT, ⅜ NPT
- Filtration grade: 5 µm, 40 µm
- Supply pressure
  – for manual drain: 12 … 206 psi
  – for semiautomatic drain: 22 … 176 psi
  – for fully automatic drain: 29 … 176 psi
- Controlled pressure range: 4.4 … 176 psi
- Flow rate: 30.0 … 67.1 scfm

Product Range Overview

Type	Pneumatic connections		Pressure regulation range [psi]			Filtration grade [µm]		Bowl guard		Bowl drain			Pressure indicator					Pressure adjustment		Reverse flow
	Body thread	Port plate	4.4... 59	4.4 ... 103	7.4 ... 176	5	40	Plastic bowl guard	Metal bowl	Manual	Semiautomatic	Fully automatic	Cover plate (without pressure gauge)	Integrated MS pressure gauge	Adapter for pressure gauge ⅛ NPT	Adapter for pressure gauge ¼ NPT	Pressure sensor with display	Rotary knob, lockable	Rotary knob, long	Flow direction from right to left
MS4N		AG...	D5	D6	D7	C	E	R	U	M	H	V	VS	AG	A8	A4	AD...	AS	LD	Z
LFR	⅛ NPT, ¼ NPT	⅛ NPT, ¼ NPT, ⅜ NPT	■	■	■	■	■	■	■	■	■	■	■	■	■	■	■	■	■	■

Features

- Good control characteristics with low hysteresis and primary pressure compensation
- High flow rates
- Directly actuated diaphragm regulator
- Three pressure regulation ranges
- Modular, in-line or panel mounting
- Lockable rotary knob
- Available with or without secondary venting
- Two pressure gauge connections for different fitting options
- Reverse flow option for exhausting from output 2 to output 1
- Optional pressure sensor with display and electric output

Contents

Technical Data → 120
Dimensional Drawings → 124
Ordering Data → 127
Accessories → 130
Replacement Parts → 140

→ www.festo.com/catalog/ms4n-lfr

Filter Regulators MS4N-LFR – Inch Series

Technical Data

FESTO

ISO Symbol

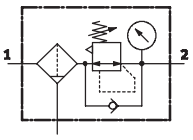

Manual bowl drain

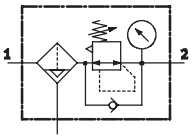

Semi or fully automatic bowl drain

General Technical Data				
Pneumatic connection 1, 2			1/8 NPT	1/4 NPT
Filtration grade		[µm]	5 (air purity class at the output 3.7.– to DIN ISO 8573-1)	
			40 (air purity class at the output 5.7.– to DIN ISO 8573-1)	
Supply pressure	M	[psi]	12 ... 206 (manual drain)	
	H	[psi]	22 ... 176 (semiautomatic drain)	
	V	[psi]	29 ... 176 (fully automatic drain)	
Pressure regulation range	D5	[psi]	4.4 ... 59	
	D6	[psi]	4.4 ... 103	
	D7	[psi]	7.4 ... 176 (4.4 ... 147 with variant pressure sensor AD...)	
Max. hysteresis		[psi]	3.7	

Standard Nominal Flow Rate qnN[1] [scfm]				
Pneumatic connection 1, 2			1/8 NPT	1/4 NPT
D5 – Pressure regulation range 4.4 ... 59 psi				
Filtration grade	5 µm		31.8[2]	63.5[2]
	40 µm		38.8[2]	67.1[2]
D6 – Pressure regulation range 4.4 ... 103 psi				
Filtration grade	5 µm		31.8	53.0
	40 µm		35.3	60.0
D7 – Pressure regulation range 7.4 ... 176 psi				
Filtration grade	5 µm		30.0	42.4
	40 µm		31.8	53.0

1) Measured at p1 = 147 psi and p2 = 88 psi, Δp = 15 psi
2) Measured at p1 = 147 psi and p2 = 44 psi, Δp = 15 psi

Standard Flow Rate qn as a Function of Output Pressure p2

Pressure regulation range D6 or D7

MS4N-LFR-⅛

Primary pressure p1 = 147 psi

Filtration grade 5 µm

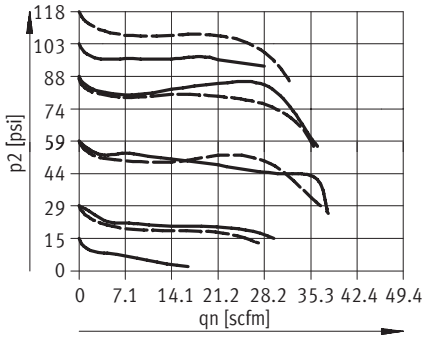

Filtration grade 40 µm

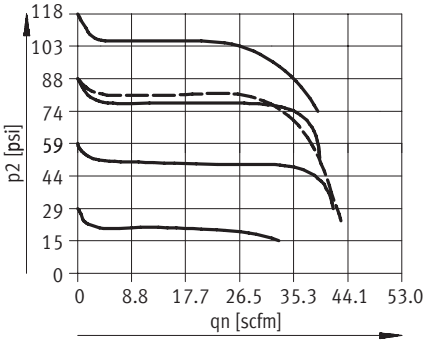

D6: 4.4 ... 103 psi
D7: 7.4 ... 176 psi

MS4N-LFR-¼

Primary pressure p1 = 147 psi

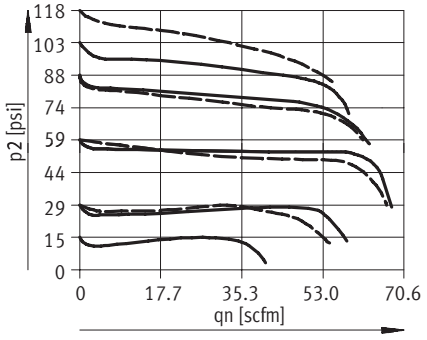

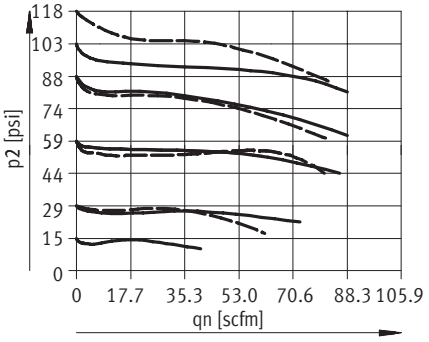

D6: 4.4 ... 103 psi
D7: 7.4 ... 176 psi

Materials

Sectional view

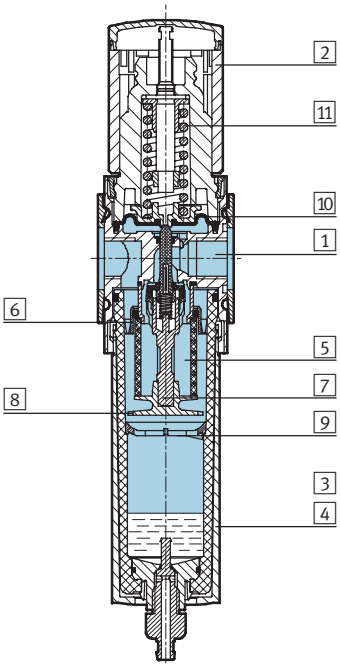

Filter regulator		
1	Body	Die-cast aluminum
2	Regulating knob	Polyamide/polyacetate
3	Plastic bowl guard	Polycarbonate/polyamide
4	Metal bowl Viewing window	Aluminum Polyamide
5	Filter element	Polyethylene
6	Spin disk	Polyacetate
7	Filter holder	Polyacetate
8	Separating plate	Polyacetate
9	Stabilizing disk	Polyacetate
10	Diaphragm	Nitrile rubber
11	Spring	Steel
–	Seals	Nitrile rubber
	Note on materials	Free of copper and PTFE only with cover plate VS

Filter Regulators MS4N-LFR – Inch Series

Dimensional Drawings

Dimensions[1] – Standard Download CAD Data ➔ **www.festo.com/us/cad**

With pressure gauge, display unit [psi], rotary knob as standard, manual bowl drain

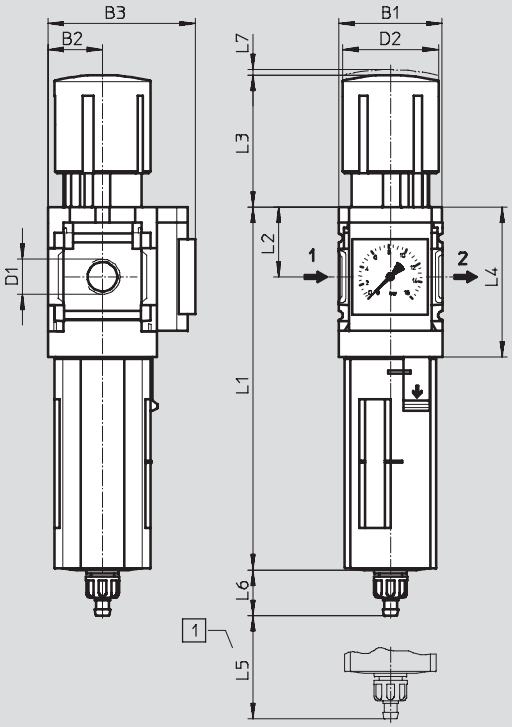

1 Installation dimensions

➔ Flow direction

Type	B1	B2	B3	D1	D2	L1 Bowl guard		L2	L3	L4	L5	L6 Bowl guard		L7
						Plastic	Metal					Plastic	Metal	
MS4N-LFR-⅛	1.57	0.83	2.24	⅛ NPT	1.46	5.54	6.23	1.06	2.01	2.30	0.98	0.70	0.70	0.08
MS4N-LFR-¼				¼ NPT										

1) Dimensions are in inches, unless otherwise noted.

Filter Regulators MS4N-LFR – Inch Series

Dimensional Drawings

FESTO

Dimensions[1] – Rotary Knob Download CAD Data ➔ **www.festo.com/us/cad**

For installation into control panel

Standard

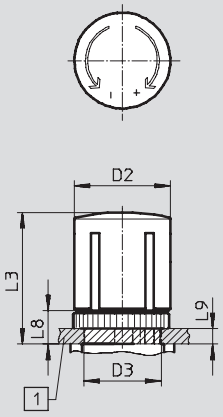

1 Max. control panel thickness

Standard, lockable AS

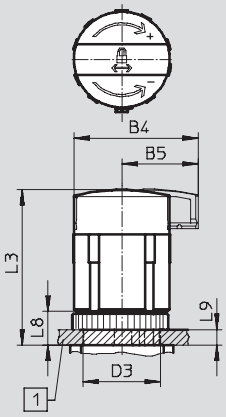

Long LD

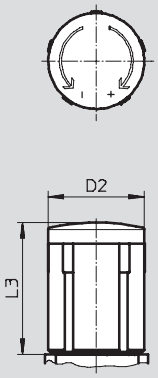

Long, lockable LD-AS

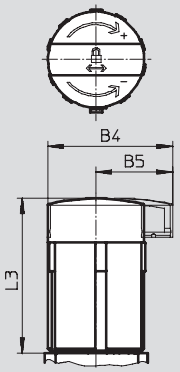

Type	B4	B5	D2	D3 +0.04	L3	L8	L9
MS4N-LFR-...	–	–	1.46	1.18	2.01	0.51	0.24
MS4N-LFR-...-AS	1.90	1.17			2.37		
MS4N-LFR-...-LD	–	–	1.46	–	2.01	–	–
MS4N-LFR-...-LD-AS	1.90	1.17			2.37		

1) Dimensions are in inches, unless otherwise noted.

Dimensions[1] – Bowl Drain Download CAD Data ➔ **www.festo.com/us/cad**

Manual M

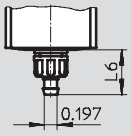

Barbed fitting for plastic tubing
PCN-4

Type	L6
Plastic bowl guard	
MS4N-LFR-...-M	0.70
Metal bowl	
MS4N-LFR-...-M	0.70

Semiautomatic H

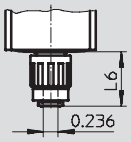

QS fitting for plastic tubing
PUN-6/PAN-6

Type	L6
Plastic bowl guard	
MS4N-LFR-...-H	0.87
Metal bowl	
MS4N-LFR-...-H	0.87

Fully automatic V

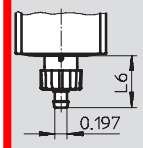

Barbed fitting for plastic tubing
PCN-4

Type	L6
Plastic bowl guard	
MS4N-LFR-...-V	0.80
Metal bowl	
MS4N-LFR-...-V	0.80

1) Dimensions are in inches, unless otherwise noted.

Filter Regulators MS4N-LFR – Inch Series

Ordering Data – Configurable Products

FESTO

M **Mandatory Data** ➔

Part No.	Series	Size	Thread		Function		Connection size		Pressure regulation range		Filtration grade		Bowl
527694	MS	4	N		LFR		⅛, ¼, AQK, AQN, AQP		D5 D6 D7		E C		R U
Order example													
527694	**MS**	**4**	**N**	–	**LFR**	–	**AQK**	–	**D6**	–	**C**	–	**R**

Ordering Table

Grid dimension [mm]	40	Conditions	Code	Enter code
M Part No.	**527694**			
Series	Standard		**MS**	MS
Size	4		**4**	4
Thread	NPT thread		**N**	N
Function	Filter regulator		**-LFR**	-LFR
Connection size	Body thread ⅛ NPT		**-⅛**	
	Body thread ¼ NPT		**-¼**	
	Port plate ⅛ NPT (dimensions ➔ 135)		**-AQK**	
	Port plate ¼ NPT (dimensions ➔ 135)		**-AQN**	
	Port plate ⅜ NPT (dimensions ➔ 135)		**-AQP**	
Pressure regulation range	4.4 ... 59 psi		**-D5**	
	4.4 ... 103 psi		**-D6**	
	7.4 ... 176 psi		**-D7**	
Filtration grade	40 µm		**-E**	
	5 µm		**-C**	
Bowl	Plastic bowl with plastic bowl guard		**-R**	
↓	Metal bowl		**-U**	

Transfer order code

527694	**MS**	**4**	**N**	–	**LFR**	–		–		–		–	

Filter Regulators MS4N-LFR – Inch Series

Ordering Data – Configurable Products

FESTO

➔ M	O Options							
Bowl drain	Pressure gauge alternatives	Alternative pressure gauge scale	Secondary venting	Rotary knob	Security	Type of mounting	Reverse flow direction
M H V	VS A8 A4 AD1 AD2 AD3 AD4	BAR MPA	OS	LD	AS	WR WP WPM WB WBM	Z
– M	– A8	–	–	– LD	– AS	– WPM	– Z

Ordering Table

Grid dimension [mm]		40	Conditions	Code	Enter code
↓ M	Bowl drain	Manual		-M	
		Semiautomatic (P1 max. 176 psi)		-H	
		Fully automatic (P1 max. 176 psi)		-V	
O	Pressure gauge alternatives	Cover plate		-VS	
		Adapter plate for EN pressure gauge ⅛, without pressure gauge		-A8	
		Adapter plate for EN pressure gauge ¼, without pressure gauge		-A4	
		Pressure sensor with display, M8 plug, 1 switching output PNP, 3-pin	1	-AD1	
		Pressure sensor with display, M8 plug, 1 switching output NPN, 3-pin	1	-AD2	
		Pressure sensor with display, M12 plug, 1 switching output PNP, 4-pin, analog output 4 ... 20 mA	1	-AD3	
		Pressure sensor with display, M12 plug, 1 switching output NPN, 4-pin, analog output 4 ... 20 mA	1	-AD4	
	Alternative pressure gauge scale	bar	2	-BAR	
		MPa	2	-MPA	
	Secondary venting	Without secondary venting		-OS	
	Rotary knob	Long rotary knob		-LD	
	Security	Lockable rotary knob		-AS	
	Type of mounting	Mounting bracket with knurled nut for regulator head (dimensions ➔ 133)	3	-WR	
		Mounting bracket (dimensions ➔ 136)	4	-WP	
		Mounting bracket (dimensions ➔ 136)	4	-WPM	
		Mounting bracket (dimensions ➔ 132)		-WB	
		Mounting bracket (dimensions ➔ 132)		-WBM	
	Reverse flow direction	Flow direction from right to left		-Z	

1 **AD1 ... AD4** Measuring range max. 147 psi

2 **BAR, MPA** Not with pressure gauge alternatives VS, A8, A4, AD1, AD2, AD3, AD4

3 **WR** Not with long rotary knob LD

4 **WP, WPM** Only with port plate AQK, AQN or AQP

Transfer order code

–	531217	–	MS4N	–	LFR	–	1/4	–	D7	–	CRV	–	AS

Description :
OUTLET CONTROL VALVES
TEFLON FUSED BALL
Ø3" CLASS 125# FLANGED VALVE
ONE VALVE NORMALLY OPENED, ONE VALVE NORMALLY CLOSED

Trade Name :
Festo

Model no :
13117330 (NC) - 13117331(NO)

ITEM NO.	PartNo	DESCRIPTION	QTY.
1	8048123	DFPD-120-RP-90-RD-F0507 - Double Acting Qtr Turn Actuator	1
2	194522	DR-MB-F10-F07 - ACTUATOR MNT ADAPTER	1
3	3482805	SRBC-CA3-YR90-MW-22A-1W-C2P20 - Sensor Box	1
4	151172	GRLA-1/4-B - One-way Flow control valve	2
5	533219	QB-1/4-1/4-U-M - Push-in Fitting	2
6	13051198	HSSS - M8X35	4
7	13063270	FLAT WASHER - M8	4
8	13063271	LOCK WASHER - M8	4
9	13063259	HEX NUT - M8	4

REV.	DESCRIPTION	DATE

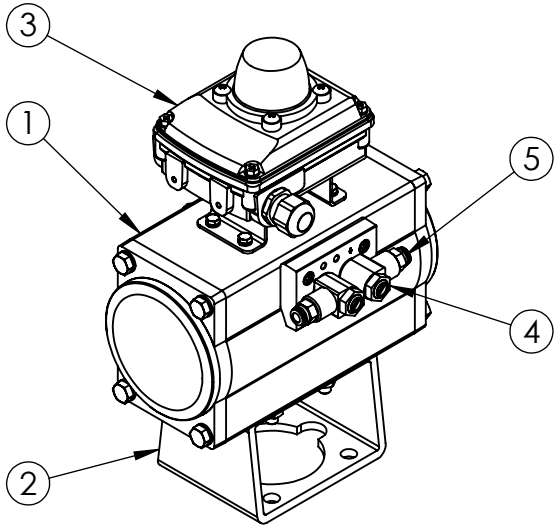

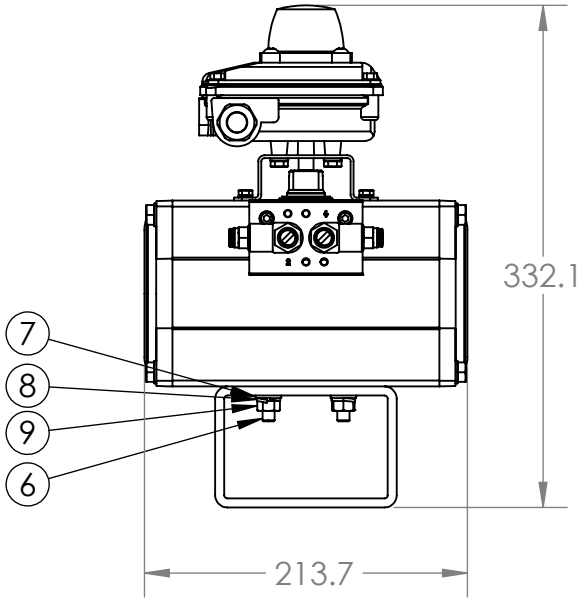

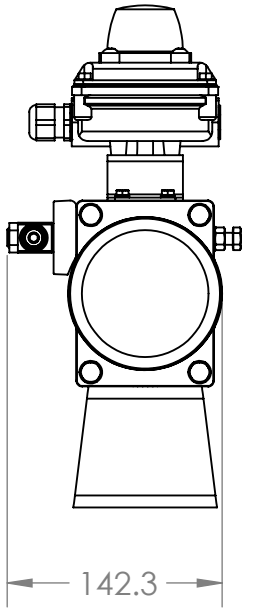

ITEM 2

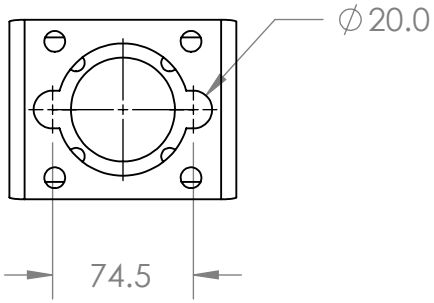

Disclaimer: The designs, information and data contained herein are property of Festo Inc. The information here in shall not be disclosed, used or duplicated in whole or in part for any purposes whatsoever without prior written consent of Festo Inc. Receipt of this document shall be deemed to be in acceptance of the conditions specified herein. Unauthorized copies of this document should be reported to and returned to Festo Inc.

	NAME	DATE
DRAWN	YUN	2016-10-03
ENG APPR.	MZA	2016-10-03

MATERIAL

FINISH

DO NOT SCALE DRAWING

UNLESS OTHERWISE SPECIFIED:

DIMENSIONS ARE IN MILLIMETERS

TOLERANCES:
x = ±1
x.x = ±0.1
x.xx = ±0.01
ANGLES = ±1°

FESTO
5300 Explorer Drive, Mississauga ON L4W 5G4
TEL: (905) 624-9000 FAX: (905) 624-9001

FILE NAME: DFPD-120-SRBC-NC-CS (13117330, FOURNIER)

TITLE: DFPD-120-SRBC-NC-CS

DWG. NO. 13117330

REV

SCALE: 1:5

SHEET 1 OF 1

5 4 3 2 1

ITEM NO.	PartNo	DESCRIPTION	QTY.
1	8048123	DFPD-120-RP-90-RD-F0507 - Double Acting Qtr Turn Actuator	1
2	194522	DR-MB-F10-F07 - ACTUATOR MNT ADAPTER	1
3	3482805	SRBC-CA3-YR90-MW-22A-1W-C2P20 - Sensor Box	1
4	151172	GRLA-1/4-B - One-way Flow control valve	2
5	533219	QB-1/4-1/4-U-M - Push-in Fitting	2
6	13051198	HSSS - M8X35	4
7	13063270	FLAT WASHER - M8	4
8	13063271	LOCK WASHER - M8	4
9	13063259	HEX NUT - M8	4

REV.	DESCRIPTION	DATE

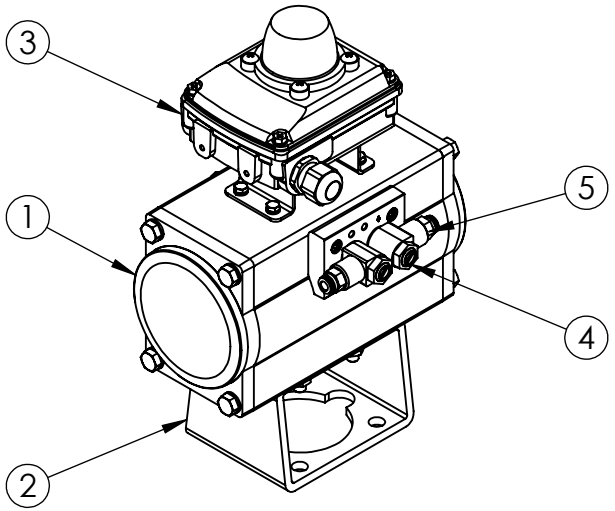

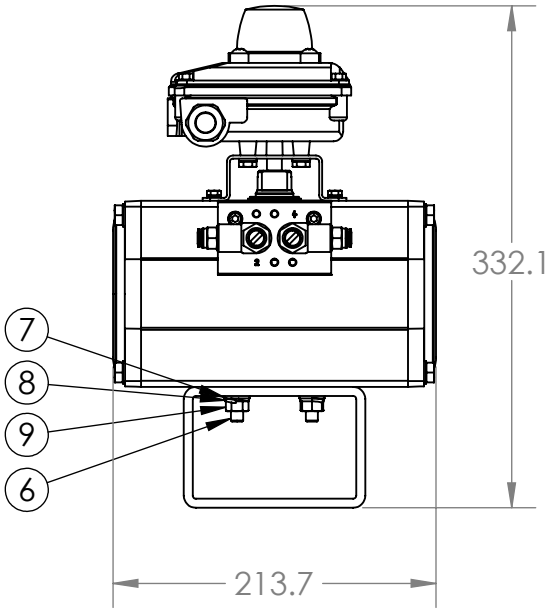

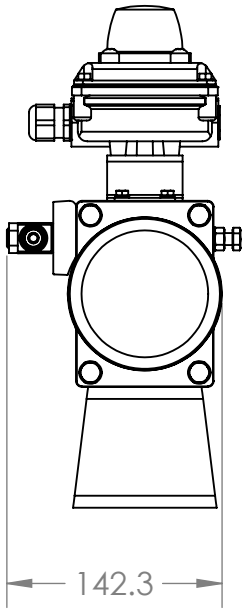

ITEM 2

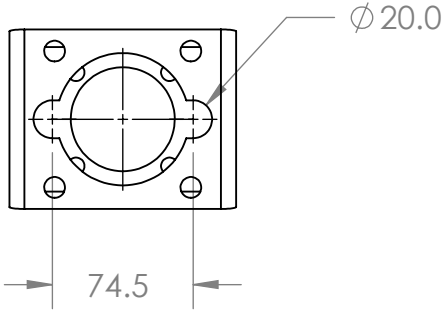

Disclaimer: The designs, information and data contained herein are property of Festo Inc. The information here in shall not be disclosed, used or duplicated in whole or in part for any purposes whatsoever without prior written consent of Festo Inc. Receipt of this document shall be deemed to be in acceptance of the conditions specified herein. Unauthorized copies of this document should be reported to and returned to Festo Inc.

	NAME	DATE
DRAWN	YUN	2016-10-03
ENG APPR.	MZA	2016-10-03

MATERIAL

FINISH

DO NOT SCALE DRAWING

UNLESS OTHERWISE SPECIFIED:

DIMENSIONS ARE IN MILLIMETERS

TOLERANCES:
x = ±1
x.x = ±0.1
x.xx = ±0.01
ANGLES = ±1°

FESTO
5300 Explorer Drive, Mississauga ON L4W 5G4
TEL: (905) 624-9000 FAX: (905) 624-9001

FILE NAME: DFPD-120-SRBC-NO-CS (13117331, FOURNIER)

TITLE: DFPD-120-SRBC-NO-CS

DWG. NO. 13117331

REV

SCALE: 1:5

SHEET 1 OF 1

5 4 3 2 1

SERIES 4000

FLANGED BALL VALVES

AMERICAN VALVE®

www.americanvalve.com

MODEL 4000

Cast Iron Flanged End Ball Valve

	Part	Material
1	Body	Cast Iron/A126 Class B
2	Ball	Cast Iron/Teflon® Fused
3	Stem	Stainless Steel
4	Gland Plate	Steel
5	Handle	Steel
6	Handle Bracket	Ductile Iron
7	Packing Follower	Stainless Steel
8	Stem Indicator	Steel
9	Spacer	Steel
10	Stem Stud/Washer	Carbon Steel
11	Gland Stud	Carbon Steel
12	Body Stud	Carbon Steel
13	Body Nut	Carbon Steel
14	Handle Bracket Bolt	Carbon Steel
15	Packing	PTFE (Chevron)
16	Body Gasket	PTFE
17	Seat Ring	RPTFE 15% GF
18	Back Seat Ring	RPTFE 15% GF
19	Handle Grip	Vinyl Rubber Foam

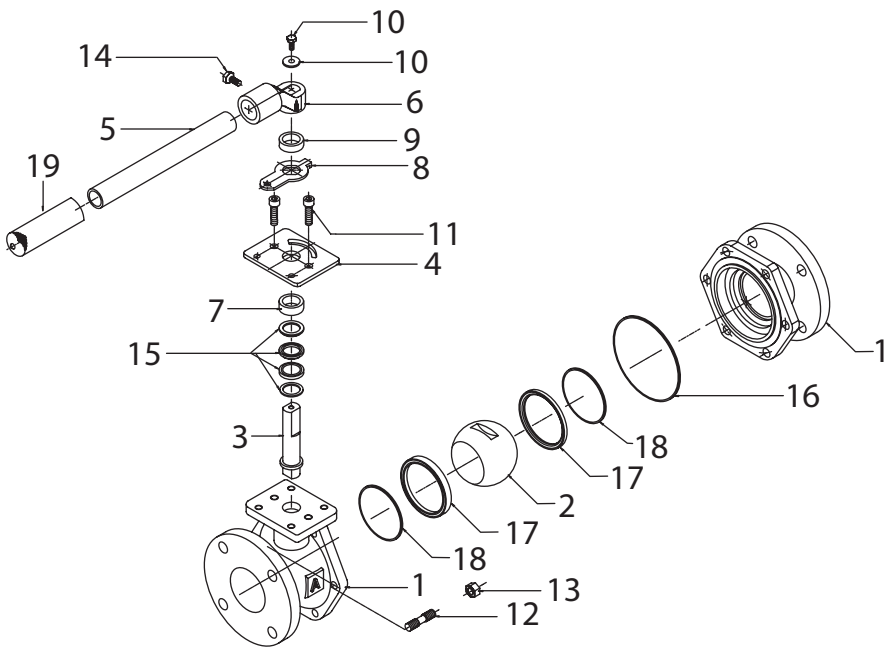

DIMENSIONS:	½	¾	1	1 ½	2	2 ½	3	4	6	8	10
A Face to Face	4 ¼	4 5/8	5	6 ½	7	7 ½	8	9	10 ½	11 ½	13
B Center of Port to Top	3 ½	3 ½	4	5	5 ½	7	7 ½	8 ½	13	13	15
C Flange Diameter	3 ½	3 5/8	4 ¼	5	6	7	7 ½	9	11	13 ½	16
D Center of Valve to Handle End	9	9	9	12	12	13 ½	13 ½	15 ½	30	30	33
E Port Diameter	½	¾	1	1 ½	2	2 ½	3	4	6	6	8
Bolt Holes	4	4	4	4	4	4	4	8	8	8	12
Weight lbs.	6	8	10	16	22	36	46	75	131	185	276
CV	26	50	100	260	500	750	1245	2500	5470	4150	6700

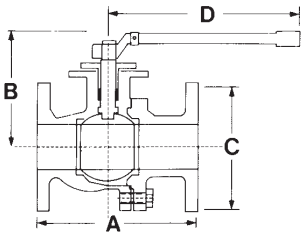

- A126 Class B Cast Iron Body with FDA food-grade epoxy powder coat.
- Teflon® Fused Solid Ball
- Blow-out Proof Stainless Steel Stem
- Reinforced Teflon® Seats
- Face to Face and Flanged Dimensions conform to ANSI Standard B16.10 which exactly match end to end dimensions of all cast iron gate valves and plug valves.
- Lockable in Full Open or Closed Positions
- Mounting Pad for Easy Actuation
- Adjustable Length/Removable Handles to fit into areas of limited space.
- Re-buildable
- Full Port through 6"

SPECIFICATIONS:

API 598
MSS SP-72
ASME B16.10
FED. SPEC. WW-V-35
AWWA C507-99 Proof of Design Test
Meets ANSI/NSF 61, Prop 65, AB1953

RATING:

125 psi WSP
200 psi WOG
353° F

This patented Cast Iron Ball Valve has been engineered to replace any IBBM Gate Valve, All Iron Gate Valve, or Plug Valve.

Teflon® is a registered trademark of DuPont.

SAMPLE SPECIFICATION:

Ball valves shall be of the floating-ball design capable of providing bi-directional, tight shutoff in accordance with MSS SP-72. The valves shall be rated at 125# WSP/200# WOG. Bodies shall be of cast iron per ASTM A126 Class B, With ANSI Class 125 flat-face flanges. The interior and exterior of the body shall be epoxy-coated. The ball shall be PTFE infused cast iron, with a 304 stainless steel blowout-proof stem. The seats and body seals shall be PTFE. The stem seal shall be PTFE, externally adjustable chevron type. Valves shall be equipped with locking handles as standard. If service conditions require, valves may be equipped with 2" square operating nuts, manual gear operators, or pneumatic, electric, or hydraulic actuators. Valves shall be the Series 4000 as manufactured by American Valve, Inc. or as approved by the engineer.

4000 Series
vs. Gate, Plug, and Butterfly Valves

Advantages of 4000 Series
vs. Gate Valves

- Quarter turn provides instant shutoff.
- Full unobstructed opening provides superior flow rate.
- Easy to open and close, no cheater bar required.
- Positive shutoff- Exceeds Class VI.
- No bronze seat rings, bronze disc rings or bronze stems to wear out.
- Lighter than gate valves, making installation and handling easier.
- Handle shows whether open or closed.
- Ball wipes clean during opening and closing.
- No bronze parts enables use in all-iron gate valve applications.
- Compact design fits into areas of limited space.
- Throttling is permitted. Open and shut are not the only working positions.
- Low profile design enables easier storage and shipping.
- Can be locked in either open or closed position.
- Teflon® fused ball resists corrosion, in a wider range of applications
- Zero wear rate in the open position.
- Unique packaging prevents damage during shipping and facilities storage.
- Easy and inexpensive to rebuild/repair

Advantages of 4000 Series
vs. Butterfly Valves

- No disc in waterway to create turbulence.
- Same ANSI flanged dimensions as gate valves for easier retrofit.
- Teflon® seats, not Buna N or EPDM.
- More suitable for steam, petroleum, and corrosive applications.
- Main seating surface does not face upstream pressure in open position.
- Full opening provides superior flow characteristics.
- Teflon® packing instead of O-ring stem seals.
- Positive shutoff- exceeds Class VI.
- Blow out proof stainless steel stem.

Advantages of 4000 Series
vs. Plug Valves

- Full unobstructed flow.
- No exposed internal components to catch and retain debris.
- No lubrication required to ensure smooth operation and maintain seals.
- Lower torque for more efficient and cost effective automation.
- Positive shutoff- exceeds Class VI.

American Valve

Teflon® fused ball

Our Teflon® fused ball is more corrosion-resistant than balls made with unprotected metal surfaces. Refer to any manufacturer's chemical resistance guide for further information.

Our Teflon® fused ball inhibits the buildup of lime, calcium, sludge, etc. that accumulates on ball surfaces and thus prevents premature failure of the valve seats. Series 4000 valves with Teflon® fused balls can last up to ten times longer than valves made with unprotected ball surfaces.

The lubricity of our Teflon® fused ball allows for lower torque ratings in any application.

This feature eliminates ball pitting, prevents build-up, lowers torque, and stops premature valve failure.

Since the Teflon® is actually impregnated .008" into the solid metal, it can't wear, chip, or flake off.

A Look Inside Our Ball

Teflon® surrounds the base material to form a fused bond to a depth of .008"

Additional .004" electrostatic coating for smoothness.

Together they produce the strength of steel with the corrosion resistance of Teflon®. Our patented process has gained the best of both worlds...Strength, Lubricity, and Bonding.

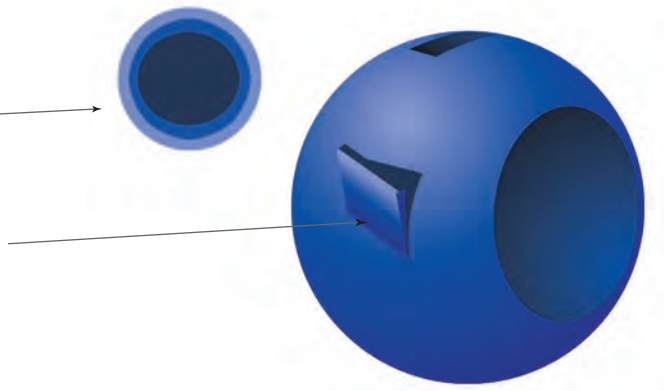

Teflon® is a registered trademark of DuPont.

Metallurgy
and Technical Info for 4000 Series

	Minimum Tensile Strength	Minimum Yield Point	Minimum Elongation
Grey Iron A126 Class B	31,000 psi	---	0.1%
Ductile Iron A536 Grade 65-45-12	65,000 psi	45,000 psi	12%
Carbon Steel A216 WCB	70,000 psi	30,000 psi	22%
304 Stainless Steel A-351 CF8	70,000 psi	28,000 psi	35%
316 Stainless Steel A-351 CF8M	70,000 psi	30,000 psi	30%

	GREY IRON	65-45-12 DUCTILE IRON	WCB	CF8	CF8M
Carbon % (max)	3.5	3.5	0.3	0.08	0.08
Manganese %	0 .5	0 .1	1 .0	1 .5	1.5
Phosphorous %	0.1	0.03	0.04	0.04	0.04
Sulfur %	0 .1	0 .005	0 .05	0 .04	0.04
Nickel %	0.02	0	0.5	8.0	9.0
Chromium %	0 .05	0 .025	0 .04	18-21	18-21
Molybdenum %	0.05	0.002	0.25	-	2-3
Silicon %	2 .1	3 .2	0 .3	2	2
Magnesium %	0.005	0.025	-	-	-

Model 4000 is made of cast iron (ASTM A126 Class B, standard grey iron). Model 4000D is made of ductile iron (ASTM 536, grade 65-45-12). Model 4001 is made of stainless steel (ASTM A351 CF8M).

It is useful to understand basic information about ferrous metals (cast irons, steels) and their relationships. 100% pure iron is never used as a cast metal because it is too soft and weak. When carbon is added, hardness and strength appear. When approximately 0.3% carbon is added, the resulting alloy is steel. Steel is a strong but difficult ferrous metal to manufacture from a production standpoint. Adding more carbon (up to about 2%) creates even more production problems. These “semi-steels” are seldom used.

When more carbon is added (between 2% and 3%), white iron is formed. White iron is true cast iron and is easy to produce. The problem with white iron is that it is very brittle because the carbon exists as iron carbide instead of pure carbon. Iron carbide (Fe3C) is a hard and brittle compound sometimes referred to as cementite. If white iron is subjected to a lengthy heat treatment, the Fe3C decomposes into iron and nodules of graphite. The end product is malleable iron.

When approximately 3.5% carbon is added, Fe3C exceeds its solubility in solid iron (the Fe3C is fully absorbed in the iron until there is no room left. The excess Fe3C is dispersed as graphite flakes). The result is grey iron. Grey iron (standard cast iron) delivers only moderate strength with almost no elongation because the excess Fe3C flakes act as stress raisers (they make cast iron easy to crack). Since grey iron is so economical to produce, its use has been widespread for centuries.

Cast Iron with spheroidal graphite (ductile iron) was first produced in 1948. Its chemical composition and percent of carbon is about the same as grey iron. The transformation to ductile iron occurs when molten grey iron is treated with magnesium. The insertion of magnesium into the pouring ladle (the process is called inoculation) transforms the Fe3C flakes into spheroids. These spheroids strengthen the metal by acting as crack arresters instead of crack facilitators. Ductile iron is sometimes referred to as spheroidal or nodular iron.

65-45-12 ductile iron is named for its physical properties (65,000 psi tensile strength, 45,000 psi yield, 12% elongation). Ductile iron chemically can be manufactured as Ferritic or Pearlitic. In Ferritic mixes, the graphite spheroids are in a matrix of pure iron. In Pearlitic mixes, the graphite spheroids are in a matrix of pure iron and cementite (Fe3C). The most common grade of ductile is Pearlitic-Ferritic, a combination of the two. American Valve’s 4000D uses a predominately Ferritic mix (9:1) to take advantage of its high impact resistance and added tensile strength (80,000 psi).

Except where API 800° F fire safe standards are required for petrochemical refineries, ***ductile iron is generally preferable to a carbon steel*** because WCB has a tendency to flake, whereas ductile iron powders when subjected to liquid erosion. Ductile iron also possesses 50% higher yield strength properties and is more cost effective. Ductile iron castings have a maximum temperature rating of 650 degrees F. Traditional glass reinforced PTFE seats begin to deform at 360 degrees F.

ASTM A536-70 (MIL SPEC D-4512) requires each casting to be marked by its foundry heat number. Each heat is chemically tested prior to magnesium inoculation and also afterwards. Chemical certification by heat number is available upon request.

Standard cast steel (carbon steel) uses the symbol WCB and is defined under ASTM A-216. It contains a maximum of 0.3% carbon. Stainless steel (ASTM A-351) has carbon levels even lower than WCB (0.08% maximum) making its production more costly. 304 Stainless Steel (CF8) adds 8% nickel, about 20% chromium, and a little more silicon. 316 stainless steel (CF8M) adds 2-3% molybdenum to the above. The addition of chromium, nickel and molybdenum enhances corrosion resistance, allowing CF8M to be utilized in a wide variety of chemical, petrochemical, and corrosive environments.

Operating Torques
for 4000 Series Ball Valve

Size	Torque (ft. lbs)
½"	10
¾"	10
1"	10
1 ½"	20
2"	35
2 ½"	48
3"	62
4"	130
6"	260
8"	360
10"	535

The actual amount of torque required to operate a valve is dependent upon many variables, such as line pressure, temperature, type of fluid, and frequency of operation. This table is based on average breakaway torque requirements for a valve handling a clean, particle-free liquid such as water. The following chart includes a safety allowance for service conditions. The torque figures listed should be further adjusted for dry or special service conditions. For fluids with high solids or abrasive content, consult factory for recommendations.

GEAR OPERATOR DIMENSIONS:

Size	A	B	C	D	E	F	G	H	I	J	DH	Ratio	TOFP*	WT
1 ½"- 2"	3 5/8	4 3/16	2 13/16	3	1 11/16	4 ½	1 ½	1 17/16	.67	.47	5	40:1	92	2
2 ½"- 4"	5 5/16	6 5/8	3 ¾	5 ¼	2 3/8	7 1/16	3	2 ¾	1.44	.59	7 ¾	45:1	367	6
6"-8"	7 3/8	8 ½	5 ¼	6 3/8	3 1/8	6 9/16	3 3/8	3 ½	1.57	.79	12 ¼	40:1	733	15
10"	7 3/8	8 ½	5 ¼	6 3/8	3 1/8	6 9/16	3 3/8	3 ½	1.57	.79	15 ½	40:1	733	15

* Torque Output Foot-Pounds

- Gives mechanical advantage for easier operation

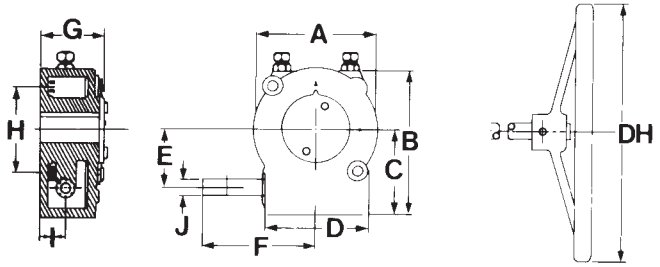

MOUNTING PAD DIMENSIONS:

Size	A	B	C	D	E	F	G	H	J	K	L	M	N
½	2.370	1.750	1.565	.570	1.140	.570	1.140	.500	1.500	2pl M8	4pl 1/4unc	.310	1.100
¾	2.370	1.750	1.565	.570	1.140	.570	1.140	.500	1.500	2pl M8	4pl 1/4unc	.310	1.100
1	2.370	1.750	1.565	.570	1.140	.570	1.140	.500	1.500	2pl M8	4pl 1/4unc	.310	1.100
1 ½	3.620	2.745	2.310	.985	1.970	.985	1.970	.825	2.100	2pl M12	4pl M8	.470	1.495
2	3.620	2.745	2.310	.985	1.970	.985	1.970	.825	2.100	2pl M12	4pl M8	.470	1.495
2 ½	4.725	3.740	2.935	1.415	2.835	1.40	2.835	1.100	2.400	2pl 1/2unc	4pl 7/16unc	.665	1.810
3	4.725	3.740	2.935	1.415	2.835	1.40	2.835	1.100	2.400	2pl 1/2unc	4pl 7/16unc	.665	1.810
4	4.725	3.740	2.935	1.415	2.835	1.40	2.835	1.100	2.400	2pl 1/2unc	4pl 7/16unc	.665	1.810
6	5.160	4.725	3.465	1.730	3.465	1.730	3.465	1.775	2.750	6pl 1/2unc	6pl 1/2unc	1.060	2.205
8	5.160	4.725	3.465	1.730	3.465	1.730	3.465	1.775	2.700	6pl 1/2unc	6pl 1/2unc	1.060	2.205
10	5.160	4.725	3.465	1.730	3.465	1.730	3.465	1.775	2.650	6pl 1/2unc	6pl 1/2unc	1.060	2.205

Dimensions and weights are given as approximates; consult factory for details.

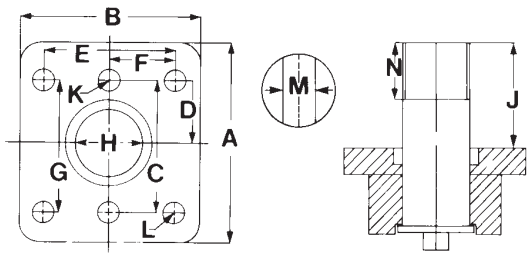

Quarter turn actuators DFPD

FESTO

New

Quarter turn actuators DFPD

Key features

Function

The DFPD series features a rack and pinion combination with a constant torque characteristic across the entire swivel range. The torque range is from 10 to 480 Nm. Quarter turn actuators DFPD are suitable for automating butterfly valves, ball valves and air dampers. They are also suitable for water/wastewater, beverage, pharmaceutical and process automation. The modular and compact design of the DFPD allows various spring configurations as a suitable solution for different applications.

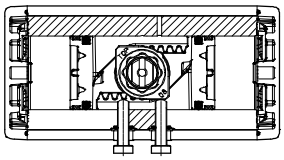

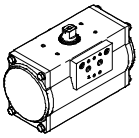

DFPD-...-D
double-acting

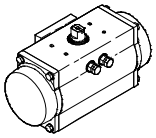

DFPD-...-S
single-acting

Types of connection

- Port pattern to NAMUR VDI/VDE 3845 for mounting solenoid valves, position sensors and positioners
- Standard connection to the process valve to ISO 5211

Variants

High temperature
DFPD-...-T4

- Seals made of FKM and plain bearings made of PPS
- For applications up to +150 °C
- II 2G c T3 X
  II 2D c 175°C X
  0°C <= Ta <= +150°C

Low temperature
DFPD-...-T6

- Seals made of FVMQ for applications down to −50 °C
- II 2G c T6 X
  II 2D c 85°C X
  −50°C <= Ta <= +60°C

Closes to the left and right
DFPD-...-R/L

- The modular system offers the option of closing to the left. This is done by turning the pistons

Spring configuration
DFPD-...-S

- The spring index can be adapted to the system's supply pressure in increments of 0.5 bar through free selection of the number of spring cartridges (4 to 12)

Epoxy coating
DFPD-...-EP

- Drive with epoxy coating

Stainless steel shaft
DFPD-...-R3

- With stainless steel shaft

NPT version
DFPD-...-N

- Pneumatic connections with NPT threads

180° version
DFPD-...-180

- Sizes 40, 120, 240, 480 double-acting also available with 180° swivel angle

Size	Flange pattern	Shaft connection	Shaft connection depth [mm]	Pneumatic connection
10	F03	V9	10.7	G1/8
	F04			NPT1/8
20	F04	V11	13.2	G1/8
	F05			NPT1/8
40	F05, F07	V14	16.5	G1/8
				NPT1/8
80	F05, F07	V17	19.3	G1/8
				NPT1/8
120	F05, F07	V17	19.3	G1/4
				NPT1/4
160	F07, F10	V22	24.3	G1/4
				NPT1/4
240	F07, F10	V22	24.3	G1/4
				NPT1/4
300	F07, F10	V22	24.3	G1/4
				NPT1/4
480	F10, F12	V27	29.5	G1/4
				NPT1/4

Quarter turn actuators DFPD

Peripherals overview

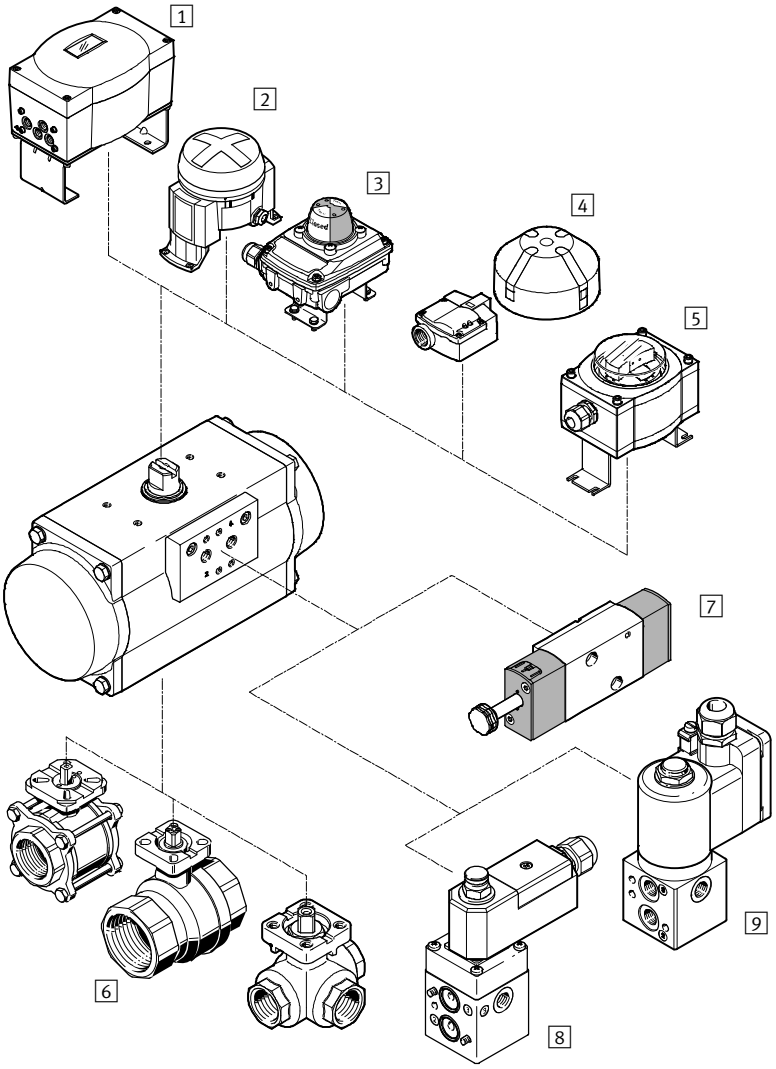

Mounting components and accessories		
	Brief description	**➔ Page/Internet**
1 Positioner CMSX	For controlling the position of quarter turn actuators in process automation systems	cmsx
2 Limit switch attachment DAPZ	Round design, variant AR, electrical, inductive or inductive and explosion-proof sensing	dapz
3 Limit switch attachment SRBC	For electrical position feedback and monitoring the position of process valves actuated using quarter turn actuators	srbc
4 Limit switch attachment SRBG	For electrical position feedback and monitoring the position of process valves actuated using quarter turn actuators	srbg
5 Sensor box SRAP	Analogue sensor box continuously senses the entire swivel range and reports this back to the controller	srap
6 Ball valve VAPB, VZBA	2-way brass or stainless steel, corrosion-resistant; 3-way stainless steel, corrosion-resistant	vapb
7 Solenoid valve VSNC	For single- and double-acting quarter turn actuators with a port pattern to VDI/VDE 3845	vsnc
8 Solenoid valve VOFC	Solenoid valve with solenoid coil, port pattern to Namur	vofc
9 Solenoid valve VOFD	Solenoid valve with solenoid coil, port pattern to Namur	vofd

Quarter turn actuators DFPD

Type codes

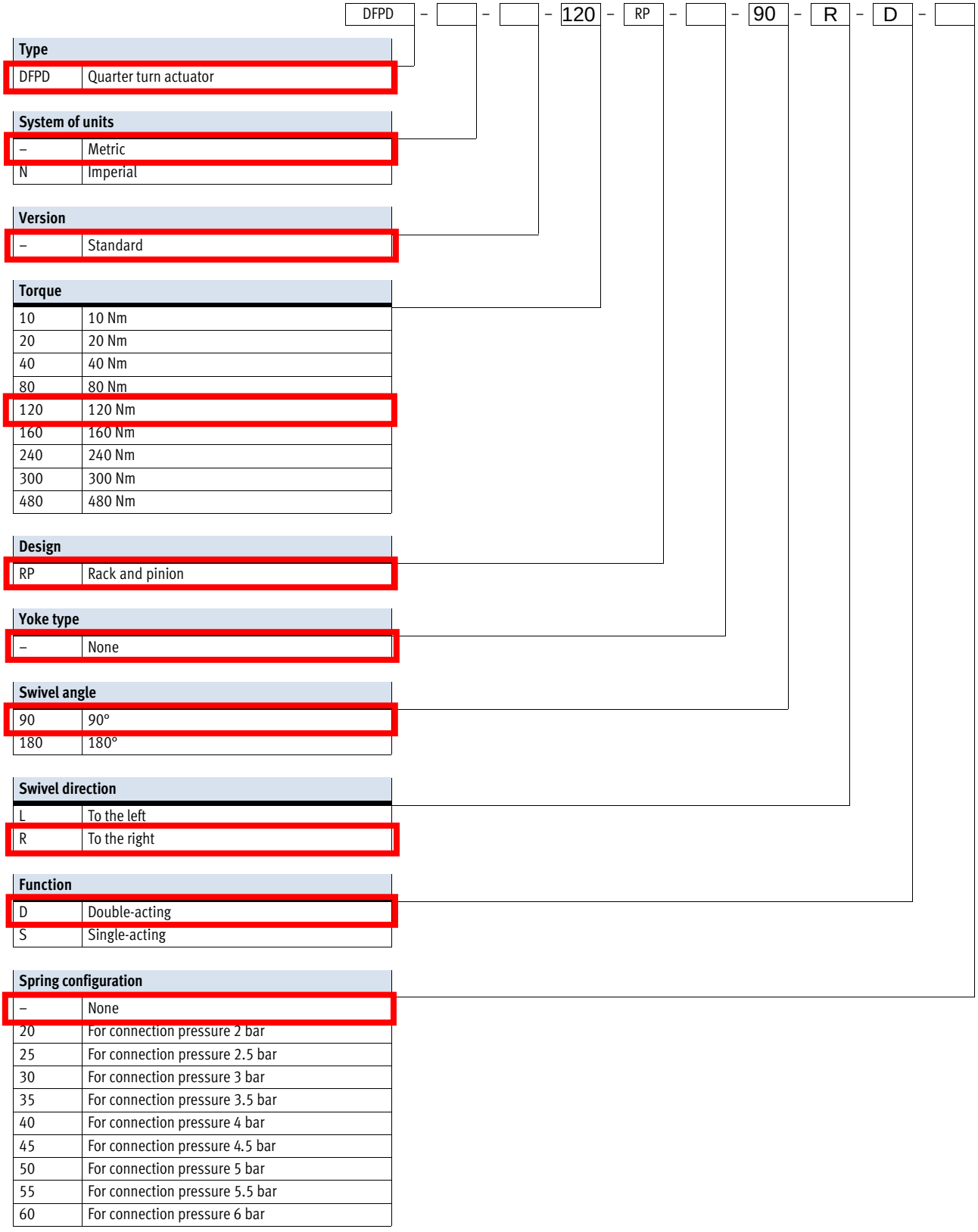

Type	
DFPD	Quarter turn actuator

System of units	
–	Metric
N	Imperial

Version	
–	Standard

Torque	
10	10 Nm
20	20 Nm
40	40 Nm
80	80 Nm
120	120 Nm
160	160 Nm
240	240 Nm
300	300 Nm
480	480 Nm

Design	
RP	Rack and pinion

Yoke type	
–	None

Swivel angle	
90	90°
180	180°

Swivel direction	
L	To the left
R	To the right

Function	
D	Double-acting
S	Single-acting

Spring configuration	
–	None
20	For connection pressure 2 bar
25	For connection pressure 2.5 bar
30	For connection pressure 3 bar
35	For connection pressure 3.5 bar
40	For connection pressure 4 bar
45	For connection pressure 4.5 bar
50	For connection pressure 5 bar
55	For connection pressure 5.5 bar
60	For connection pressure 6 bar

Quarter turn actuators DFPD

Type codes

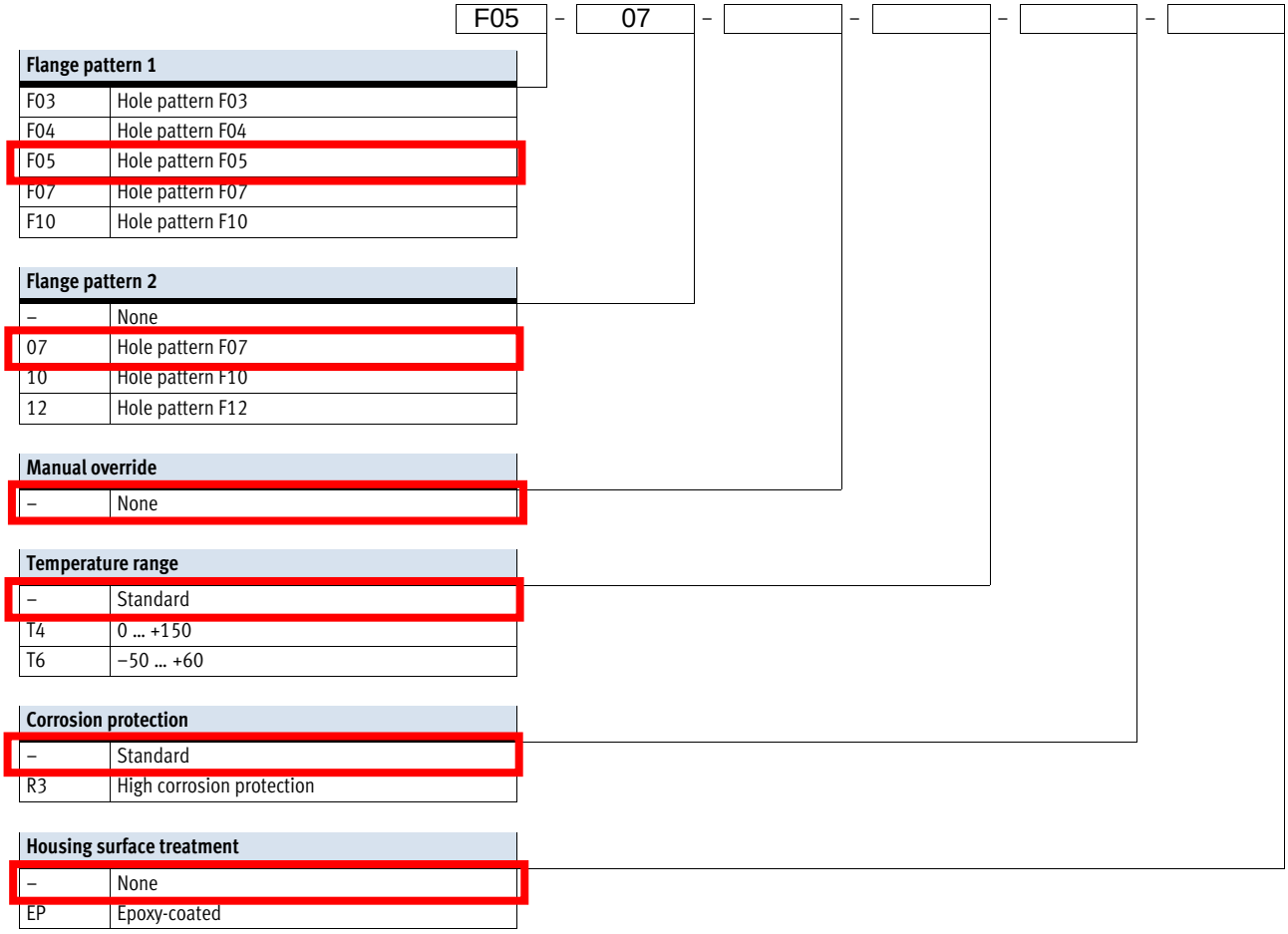

Flange pattern 1	
F03	Hole pattern F03
F04	Hole pattern F04
F05	Hole pattern F05
F07	Hole pattern F07
F10	Hole pattern F10

Flange pattern 2	
–	None
07	Hole pattern F07
10	Hole pattern F10
12	Hole pattern F12

Manual override	
–	None

Temperature range	
–	Standard
T4	0 … +150
T6	–50 … +60

Corrosion protection	
–	Standard
R3	High corrosion protection

Housing surface treatment	
–	None
EP	Epoxy-coated

New

Quarter turn actuators DFPD, double-acting

Technical data

FESTO

Function

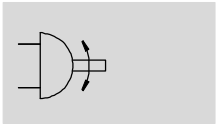

Swivel angel
0 ... 90°

Size
10 ... 480

Torque
10 ... 480 Nm

General technical data										
Size		10	20	40	80	120	160	240	300	480
Mode of operation		Double-acting								
Design		Rack and pinion								
Cushioning		No cushioning								
Mounting position		Any								
Pneumatic connection		G1/8				G1/4				
		NPT1/8				NPT1/4				
Connection to process valve as per standard		ISO 5211								
Valve connection conforms to standard		VDI/VDE 3845 (NAMUR)								
Connection for positioner and position sensor conforms to standard		VDI/VDE 3845 (NAMUR)								
Flange hole pattern		F03	F04	F04	F05	F05, F07		F07, F10		F10, F12
Swivel angle	[°]	90								
End-position adjusting range at 0°	[°]	–5 ... +5								
End-position adjusting range at 90°	[°]	–5 ... +5								
Position sensing		Visual								
Closing direction		Closes to the right								

Operating and environmental conditions		
Operating pressure	[bar]	2 ... 8
Nominal operating pressure	[bar]	5.5
Operating medium		Compressed air to ISO 8573-1:2010 [7:4:4]
Note on operating/pilot medium		Pressure dew point 10°C below ambient temperature/temperature of medium
		Lubricated operation possible (in which case lubricated operation will always be required)
Ambient temperature	[°C]	–20 ... +80
CE marking (see declaration of conformity) ➔ www.festo.com		To EC Machinery Directive
		To EU Explosion Protection Directive (ATEX)
ATEX category for gas		II 2G
Explosion ignition protection type for gas		c T4 X
ATEX category for dust		II 2D
Explosion ignition protection type for dust		c 105°C X
Explosion-proof temperature rating	[°C]	–20 <= Ta <= +80

Quarter turn actuators DFPD, double-acting

Technical data

FESTO

Theoretical torque [Nm] as a function of operating pressure											
	Operating pressure [bar]										
Size	2	2.5	3	3.5	4	4.5	5	5.5	6	7	8
10	3.7	4.7	5.6	6.6	7.5	8.4	9.4	**10.3**	11.2	13.1	15.0
20	7.3	9.1	11.0	12.8	14.6	16.4	18.3	**20.1**	21.9	25.6	29.2
40	13.9	17.4	20.9	24.4	27.9	31.3	34.8	**38.3**	41.8	48.7	55.7
80	30.0	37.5	44.9	52.4	59.9	67.4	74.9	**82.4**	89.9	104.9	119.9
120	42.7	53.4	64.0	74.7	85.4	96.1	106.7	**117.4**	128.1	149.4	170.8
160	58.5	73.2	87.8	102.5	117.1	131.7	146.4	**161.0**	175.6	204.9	234.2
240	85.2	106.5	127.8	149.1	170.4	191.7	213.0	**234.3**	255.6	298.2	340.8
300	109.8	137.2	164.7	192.1	219.6	247.0	274.5	**301.9**	329.3	384.2	439.1
480	172.4	215.5	258.5	301.6	344.7	387.8	430.9	**474.0**	517.1	603.3	689.5

Note

The operating torque of the drive must not be higher than the maximum permissible torque listed in ISO 5211, with reference to the size of the mounting flange and of the coupling.

Materials

Sectional view

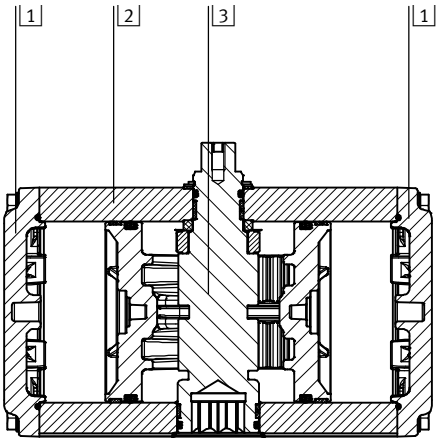

Quarter turn actuators				Basic material number
1	Cap		Coated die-cast aluminium	EN AC-46100-D
2	Housing		Anodised wrought aluminium alloy	EN AW-6063-T6
3	Shaft		Nickel-plated steel	1.0715
		R3	High-alloy stainless steel	1.4305
–	Mounting plate		Anodised wrought aluminium alloy	EN AW-6063-T6
	Piston		Die-cast aluminium	EN AC-46100-D
	Seals		NBR	–
	Spring		Spring steel	–
	Bearing		POM	–
	Cam		Stainless steel casting	1.4308
			Steel	1.0765
	Screws		High-alloy stainless steel	1.4301
	Note on materials		RoHS-compliant	–

Air consumption [l/cycle] at 6 bar			
Type		Type	
DFPD-10-RP-90-D	0.54	DFPD-160-RP-90-D	10.80
DFPD-20-RP-90-D	1.21	DFPD-240-RP-90-D	15.60
DFPD-40-RP-90-D	2.47	DFPD-240-RP-180-D	28.20
DFPD-40-RP-180-D	4.80	DFPD-300-RP-90-D	26.40
DFPD-80-RP-90-D	5.3	DFPD-480-RP-90-D	40.20
DFPD-120-RP-90-D	7.80	DFPD-480-RP-180-D	66.60
DFPD-120-RP-180-D	14.40		

Quarter turn actuators DFPD, double-acting

Technical data

Dimensions Download CAD data ➔ **www.festo.com**

Size 120 ... 480

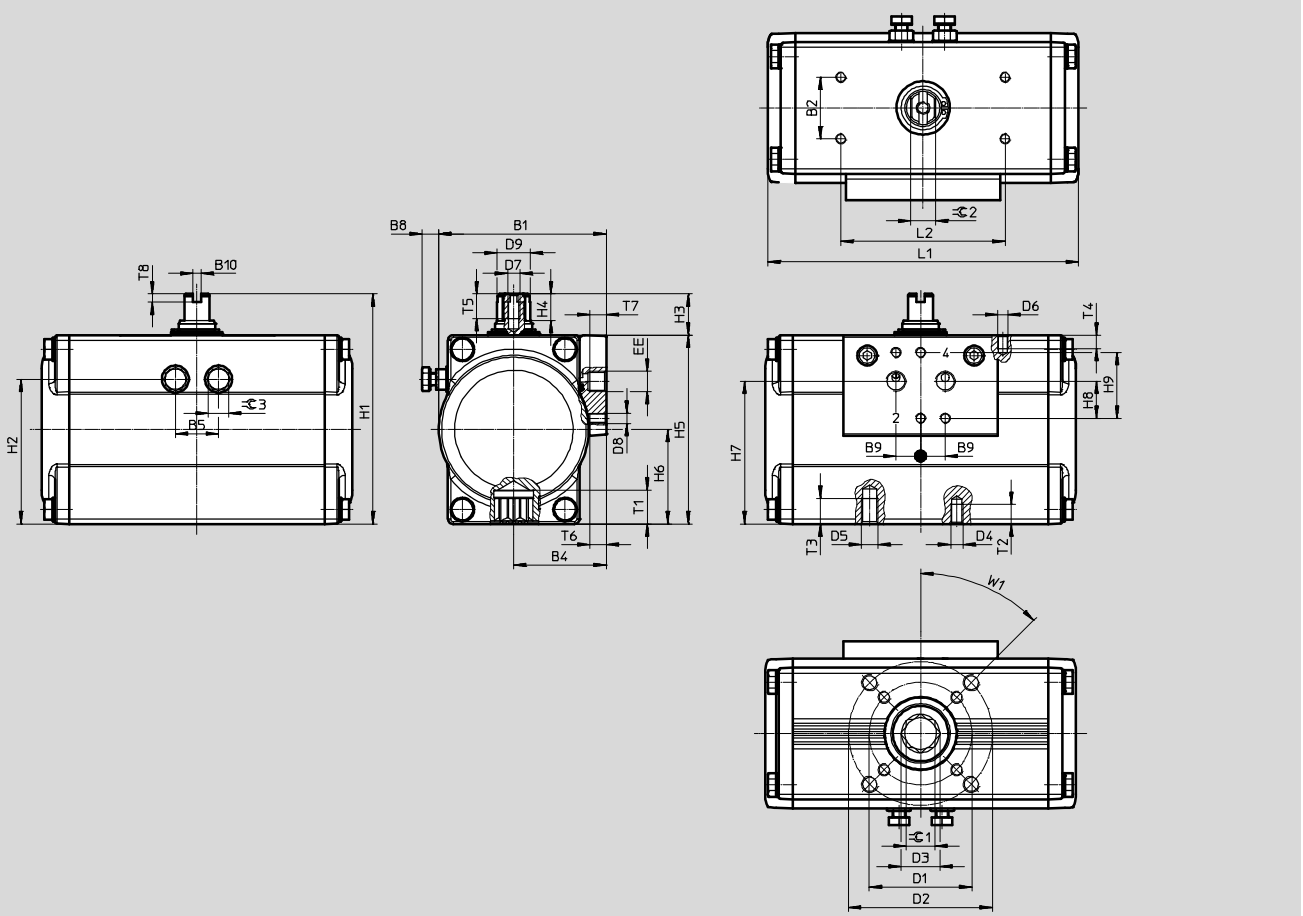

Quarter turn actuators DFPD, double-acting

Technical data

FESTO

Type	B1	B2 ±0.1	B4	B5	B8 max.	B9	B10	D1 ∅ ±0.1	D2 ∅ ±0.1	D3 ∅	D4	D5	D6
DFPD-120	111.5	30	60.5	32	12.3	12	4	50	70	23.3	M6	M8	M5
DFPD-120-180										23.2			
DFPD-160	120		63.5	36	13.4			70	102	23.2	M8	M10	
DFPD-240	135.5		71.5	41	18.5					30			
DFPD-240-180										30.3			
DFPD-300	144		74.5	46	17					30			
DFPD-480	163		83	52	19.3			102	125	37.4	M10	M12	
DFPD-480-180													

Type	D7	D8	D9 ∅ ±0.1	EE	H1	H2	H3 -0.5	H4 +0.1	H5	H6	H7 ±0.3	H8 ±0.1	H9
DFPD-120	M6	M5	22.5	G¼ or NPT¼	143	97.75	20	13	123	$61.5_{\pm 0.2}$	98.4	16	32
DFPD-120-180													
DFPD-160			25.5		154	106.25			134	$67_{\pm 0.2}$	109.4		
DFPD-240			31.8		180	120.5	30	19.5	150	$75_{\pm 0.2}$	120.2		
DFPD-240-180													
DFPD-300					192	131			162	$81_{\pm 0.3}$	132.1		
DFPD-480			38		214	149.5			184	$92_{\pm 0.4}$	152.5		
DFPD-480-180													

Type	L1	L2 ±0.1	T1 ±0.4	T2	T3	T4	T5	T6	T7	T8 +0.5	⫧ 1 H11	⫧ 2 h11	⫧ 3	W1
DFPD-120	213.7	80	19.3	9	12	8	14	8	12	4	17	15	13	45°
DFPD-120/180	326.8													
DFPD-160	230.9		24.3	12	15						22	19	16	
DFPD-240	257											22	18	
DFPD-240/180	395.5													
DFPD-300	334.4													
DFPD-480	374.2		29.5	15	18						27	27	21	
DFPD-480/180	550.3													

Quarter turn actuators DFPD, double-acting

Technical data

FESTO

Ordering data				
Type	Size	Product weight [g]	Part No.	Type
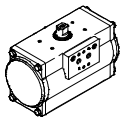	10	965	**8047613**	**DFPD-10-RP-90-RD-F03**
			8048010	**DFPD-10-RP-90-RD-F04**
	20	1275	**8047614**	**DFPD-20-RP-90-RD-F04**
			8048011	**DFPD-20-RP-90-RD-F05**
	40	1882	**8047615**	**DFPD-40-RP-90-RD-F0507**
	80	3308	**8047616**	**DFPD-80-RP-90-RD-F0507**
	120	4872	**8048123**	**DFPD-120-RP-90-RD-F0507**
	160	6082	**8048124**	**DFPD-160-RP-90-RD-F0710**
	240	8594	**8048125**	**DFPD-240-RP-90-RD-F0710**
	300	11224	**8048126**	**DFPD-300-RP-90-RD-F0710**
	480	16025	**8048127**	**DFPD-480-RP-90-RD-F1012**

Ordering data				
Type	Size	Product weight [g]	Part No.	Type
Version R3-EP, epoxy-coated				
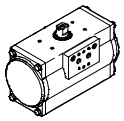	10	965	**8047617**	**DFPD-10-RP-90-RD-F03-R3-EP**
			8048012	**DFPD-10-RP-90-RD-F04-R3-EP**
	20	1275	**8047618**	**DFPD-20-RP-90-RD-F04-R3-EP**
			8048013	**DFPD-20-RP-90-RD-F05-R3-EP**
	40	1882	**8047619**	**DFPD-40-RP-90-RD-F0507-R3-EP**
	80	3308	**8047620**	**DFPD-80-RP-90-RD-F0507-R3-EP**
	120	4872	**8048128**	**DFPD-120-RP-90-RD-F0507-R3-EP**
	160	6082	**8048129**	**DFPD-160-RP-90-RD-F0710-R3-EP**
	240	8594	**8048130**	**DFPD-240-RP-90-RD-F0710-R3-EP**
	300	11224	**8048131**	**DFPD-300-RP-90-RD-F0710-R3-EP**
	480	16025	**8048132**	**DFPD-480-RP-90-RD-F1012-R3-EP**

Semi-rotary actuator DFPD-120-RP-90-RD-F0507

Part number: 8048123

★ Core product range

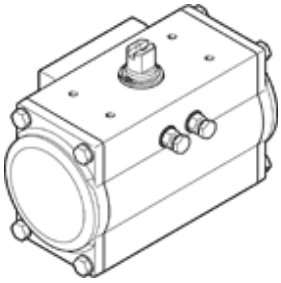

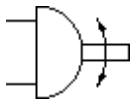

General operating conditions

Data sheet

Data sheet

Feature	values
Shipping date	View
Size of actuator	120
Flange hole pattern	F0507
Swivel angle	90 deg
End-position adjustment range at 0°	-5 ... 5 deg
End-position adjustment range at 90°	-5 ... 5 deg
Shaft connection depth	19.3 mm
Fitting connection conforms to standard	ISO 5211
Cushioning	No cushioning
Assembly position	Any
Mode of operation	double-acting
Design structure	Rack and pinion
Position detection	Optical
Closing direction	right-closing
Valve connection conforms to standard	VDI/VDE 3845 (NAMUR)
Connection for positioner and position sensor conforms to standard	VDI/VDE 3845 size AA 1
Working pressure	2 ... 8 bar
Nominal working pressure	5.5 bar
ATEX category Gas	II 2G
Explosion ignition protection type Gas	c T4 X
ATEX category Dust	II 2D
Explosion ignition protection type Dust	c 105°C X
Explosion-proof ambient temperature	-20°C <= Ta <= +80°C
Ambient temperature	-20 ... 80 °C
Operating medium	Compressed air in accordance with ISO8573-1:2010 [7:4:4]
Note on operating and pilot medium	Pressure dew point 10°C below ambient temperature/temperature of medium Lubricated operation possible (subsequently required for further operation)
CE symbol (see declaration of conformity)	according to EU-Ex protection guideline (ATEX)
Torque at rated working pressure and 0° rotation angle	117.4 Nm
Torque at nominal operating pressure with 90° swivel angle	117.4 Nm
Note about the torque	The operating torque of the actuator must not be higher than the maximum permissible torque listed in ISO 5211, with reference to the size of the mounting flange and of the coupling.
Air consumption at 6 bar per cycle 0°-90°-0°	7.8 l
Product weight	4,872 g
Shaft connection	V17
Pneumatic connection	G1/4 NPT1/4-18
Materials note	Conforms to RoHS
Materials information for subbase	Wrought Aluminum alloy Anodized
Material number of sub-base	EN AW-6063-T6

Feature	values
Materials information for cover	Aluminum die cast coated
Material number, cover	EN AC-46100-D
Materials information for seals	NBR
Materials information for spring	Spring steel
Materials information, housing	Wrought Aluminum alloy Anodized
Material number for housing	EN AW-6063-T6
Materials information for piston rod	Aluminum die cast
Material number of piston rod	EN AC-46100-D
Materials information for bearing	POM
Material information, cam	Stainless steel casting
Material number of cam	1.4308
Screw material data	High alloy steel, non-corrosive
Material number, screw	1.4301
Materials information for shaft	Steel Nickel plated
Material number for shaft	1.0715

Quarter-turn actuator

DFPD

FESTO

Repair instructions (en)

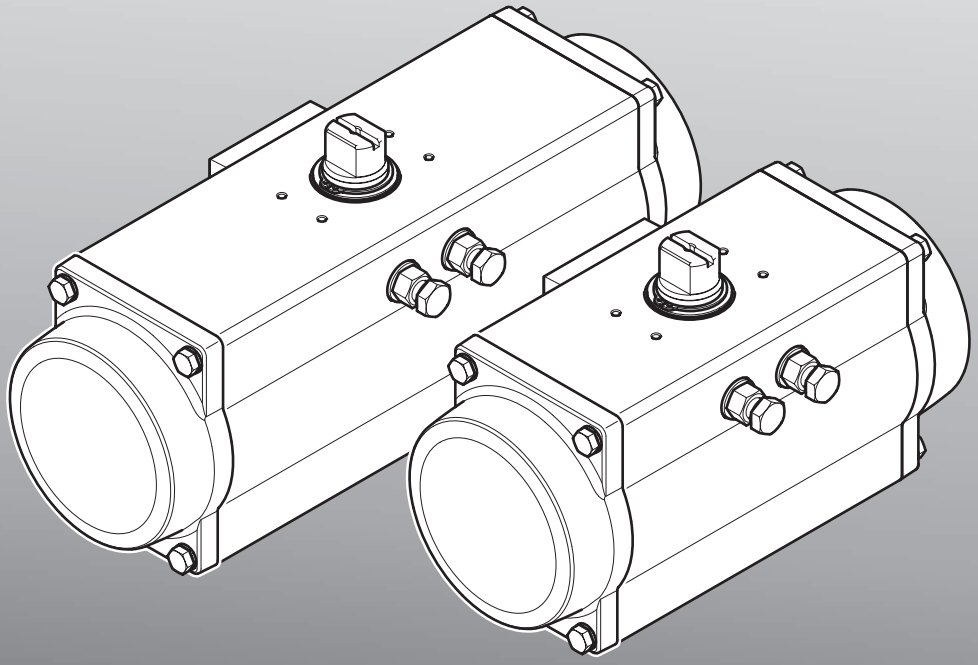

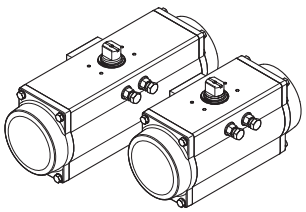

DFPDb_en

1 Important information

1.1 About these repair instructions

This document contains important information about proper repair of the quarter-turn actuator type DFPD.

Before carrying out a repair, these repair instructions must be read in full and followed.

Other documentation for this product:

- **Operating instructions (➔ www.festo.com/sp)**
- **Spare parts documentation (➔ www.festo.com/spareparts)**

1.2 Symbols used

1.2.1 Danger categories

The following symbol identifies text passages which draw attention to specific hazards.

Warning

Marking of special information

The following symbols identify text passages which contain special information.

Note

1.2.2 Repair steps

Familiarise yourself with the meaning of the symbols before starting the repair work.

Warning
There is a risk of injury due to uncontrolled movements of components.

Reference arrow
Symbol indicating the individual components to be noted.

Linear movement arrow
Carry out a linear movement

Slow movement
Carry out the dismantling / assembly step slowly and carefully.

Reference to repair steps
Follow the given repair steps.

Attention
Pay particular attention to notes and information.

Visual inspection
Perform a visual inspection.

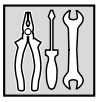

Tools

Use suitable tools.

Functional test / start-up

Follow the functional test / start-up information in the brief instructions (➔ www.festo.com).

1.2.3 Cleaning and greasing

Cleaning

The components must be thoroughly cleaned to remove all foreign particles, machining residues and old lubricants before they are greased.

Clean with a soft, lint-free cloth and non-abrasive cleaning agents. Check the compatibility of the cleaning agent with the materials to be cleaned.

Thin grease film outside

A film of grease covers the external surface so that the grease colour tarnishes the surface slightly.

Recommendation:

Apply the grease with a soft brush or similar.

1.3 Text designations used in these repair instructions

– General lists.

➔ Reference to further information

Underlined, blue text indicates a cross-reference or hyperlink that you can click on in the PDF.

1.4 Tools

Among other things, the following standard tools are required to repair the quarter-turn actuator:

– Spanner
– Retaining ring pliers for external retaining rings
– Torque wrench

2 General safety instructions and information

2.1 General safety instructions

Warning

Read and follow all safety instructions and information. Failure to comply with these safety instructions and information can result in serious injuries.

Note

To achieve ATEX conformity, the toothed discs must be replaced each time the corresponding screws or bolts are loosened. When screwing back in, observe the tightening torques given for the screws.

– The control block may only be repaired by authorised and trained personnel acting in accordance with the requirements in these repair instructions and the brief instructions for the device.

- Pay attention to cleanliness while repairing the quarter-turn actuator. Do not allow dirt particles to get into the quarter-turn actuator.
- A shutdown must be performed before any repair work is carried out.
- Before repairing the quarter-turn actuator, any attachments on it must be dismantled.
- The control block must be completely depressurised and de-energised, and reliably secured against unauthorised restarting before starting any repair work is started.
- Accidental switching on or concealed pressure can trigger unexpected movements during dismantling of the quarter-turn actuator. Therefore, completely vent the quarter-turn actuator before each repair.
- Use original spare parts only to repair the quarter-turn actuator.
- Wear the necessary personal protective equipment.
- In the event of damage to the quarter-turn actuator caused by
  - unauthorised manipulation,
  - non-intended use (misuse),
  - use of non-original spare parts

  all warranty and liability claims against the manufacturer expire.
- The technical documentation required for installation and start-up (functional test) of the quarter-turn actuator must be available.

2.2 General information

- Standard tools are needed to repair the quarter-turn actuator, which must be available in a service workshop (➔ Chapter 1.4 on page 6).
- Components and equipment replaced during repair must be disposed of in accordance with the relevant local environmental protection regulations.
- Where possible the repair should be carried out on a stable and flat work surface with space for small parts.
- The figures of the repair steps show size DFPD-300-...-D / S-...-60 (12 installed springs) by way of example. Individual minor differences between the quarter-turn actuator in hand and the illustrated example are possible.
- Depending on the temperature range (standard / T4 / T6), Festo recommends the following lubricants:
  - SYNTHY POLYMER 402/2 (standard variant)
  - HEVOLIT PE 280-1 FG (high-temperature variant T4)
  - RENOLIT SI 300 M (low-temperature variant T6)
- Individual components must be greased when installing the quarter-turn activator. The following table shows the recommended quantity of grease during the entire installation.

Size	Recommended quantity of grease for installation
DFPD-10	2 g
DFPD-20	3 g
DFPD-40	5 g
DFPD-80	7 g
DFPD-120	11 g
DFPD-160	15 g
DFPD-240	20 g
DFPD-300	30 g
DFPD-480	45 g
DFPD-700	55 g
DFPD-900	65 g
DFPD-1200	85 g
DFPD-2300	110 g

3.4 DFPD-40 / 80 / 120 / 160-...-D components list

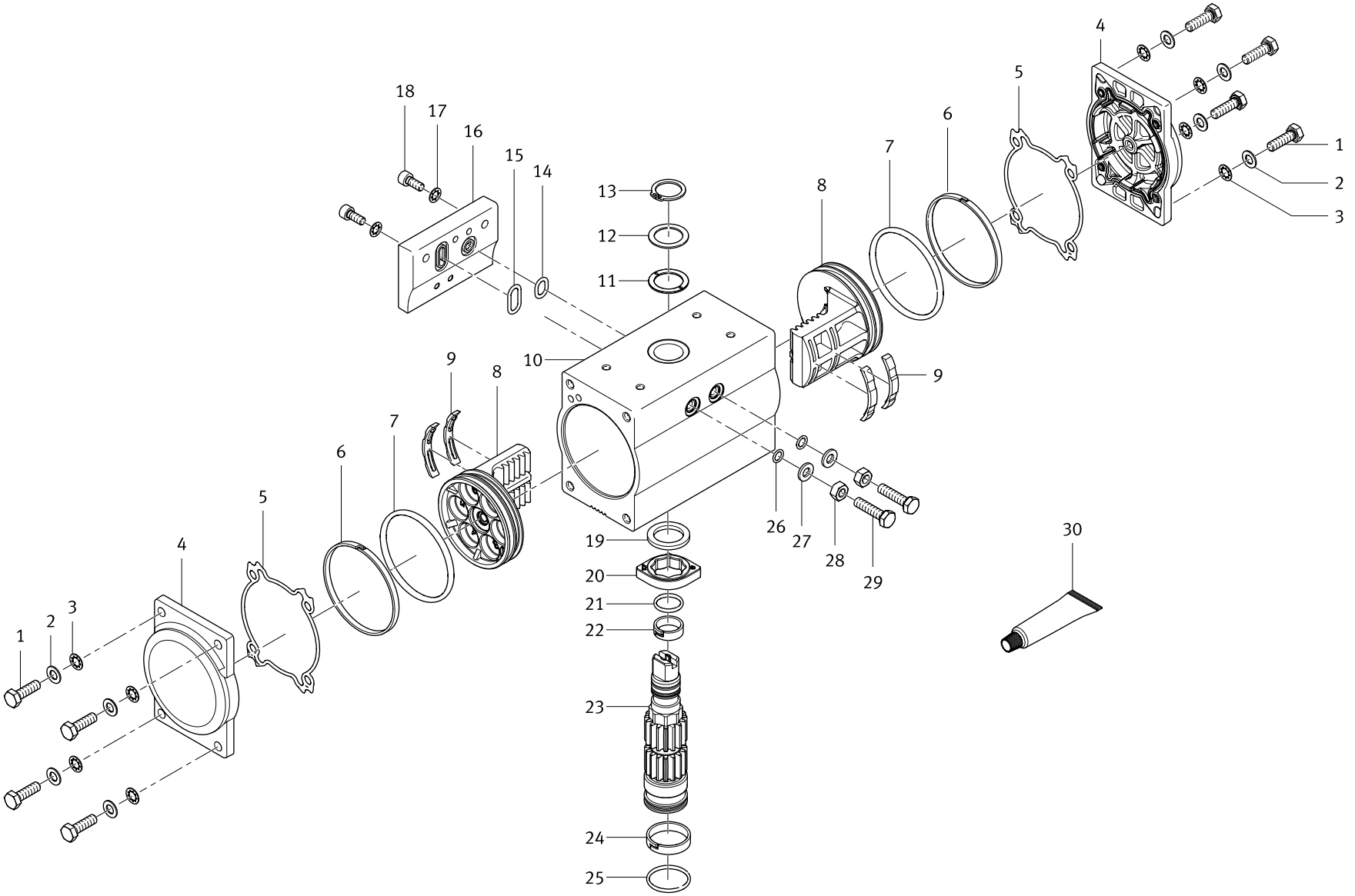

3.4.3 DFPD-120-...-D bill of materials

No.	Standard Designation, type	T4 Designation, type	T6 Designation, type
1	Hexagon head screw, ISO 4017-M8×25-A2-70	Hexagon head screw, ISO 4017-M8×25-A2-70	Hexagon head screw, ISO 4017-M8×25-A2-70
2	Ring, 8.3×15×1.5-1.4301	Ring, 8.3×15×1.5-1.4301	Ring, 8.3×15×1.5-1.4301
3	Toothed disc, DIN 6797-J-8,4-A2-70	Toothed disc, DIN 6797-J-8,4-A2-70	Toothed disc, DIN 6797-J-8,4-A2-70
4	End cap	End cap	End cap
5	Moulded seal	Moulded seal	Moulded seal
6	Sliding ring	Sliding ring	Sliding ring
7	O-ring, 80×4.5-N-NBR70	O-ring, I3601 B-80×4.5-N-FPM75	O-ring, 80×4.5-N-FVMQ70
8	Piston	Piston	Piston
9	Slide element	Slide element	Slide element
10	Housing	Housing	Housing
11	Sliding ring	Sliding ring	Sliding ring
12	Shim, DIN 988-25×35×1-A2	Shim, DIN 988-25×35×1-A2	Shim, DIN 988-25×35×1-A2
13	Retaining ring, DIN 471-25×1.2-A2	Retaining ring, DIN 471-25×1.2-A2	Retaining ring, DIN 471-25×1.2-A2
14	O-ring, I3601 B-16×2-N-NBR70	O-ring, I3601 B-16×2-N-FPM75	O-ring, 16×2-N-FVMQ70
15	O-ring, I3601 B-21×2-N-NBR70	O-ring, I3601 B-21×2-N-FPM75	O-ring, 21×2-N-FVMQ70
16	Mounting plate	Mounting plate	Mounting plate
17	Toothed disc, DIN 6797-J-5,1-A2-70	Toothed disc, DIN 6797-J-5,1-A2-70	Toothed disc, DIN 6797-J-5,1-A2-70
18	Socket head screw, DIN 912-M5×16-A2-70	Socket head screw, DIN 912-M5×16-A2-70	Socket head screw, DIN 912-M5×16-A2-70
19	Sliding ring	Sliding ring	Sliding ring
20	Cam	Cam	Cam
21	O-ring, I3601 B-20.24×2.62-N-NBR70	O-ring, I3601 B-20.24×2.62-N-FPM75	O-ring, 20.24×2.62-N-FVMQ70
22	Sliding ring	Sliding ring	Sliding ring
23	Shaft	Shaft	Shaft
24	Sliding ring	Sliding ring	Sliding ring
25	O-ring, I3601 B-36.14×2.62-N-NBR70	O-ring, I3601 B-36.14×2.62-N-FPM75	O-ring, 36.14×2.62-N-FVMQ70
26	O-ring, I3601 B-7.59×2.62-N-NBR70	O-ring, I3601 B-7.59×2.62-N-FPM75	O-ring, 7.59×2.62-N-FVMQ70
27	Ring, 8.2×16×1.5-1.4301	Ring, 8.2×16×1.5-1.4301	Ring, 8.2×16×1.5-1.4301
28	Hex nut, DIN 934-M8-A2-70	Hex nut, DIN 934-M8-A2-70	Hex nut, DIN 934-M8-A2-70
29	Regulating screw	Regulating screw	Regulating screw
30	Lubricant, SYNTHY POLYMER 402/2	Lubricant, HEVOLIT PE280-1 FG	Lubricant, ISOFLEX TOPAS NB5051

4 Repair steps

4.1 Dismantling

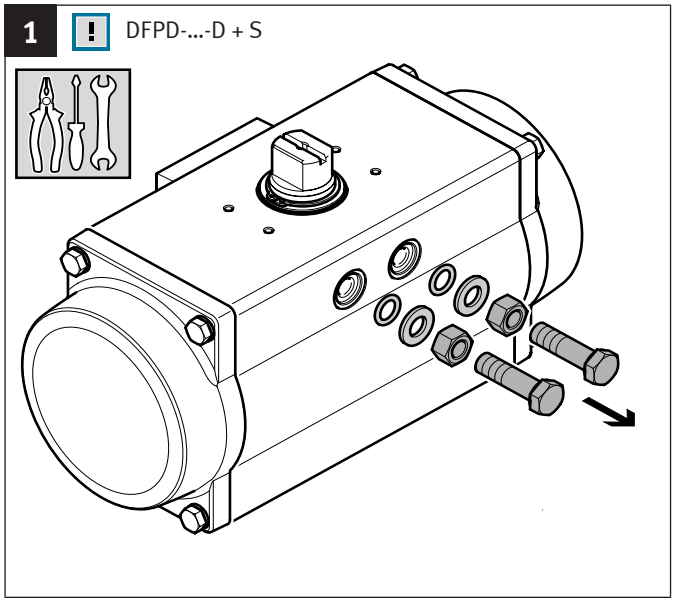

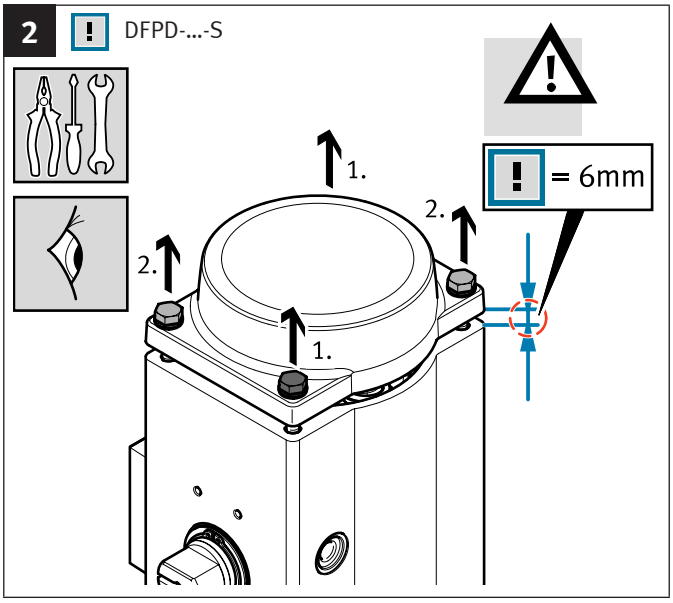

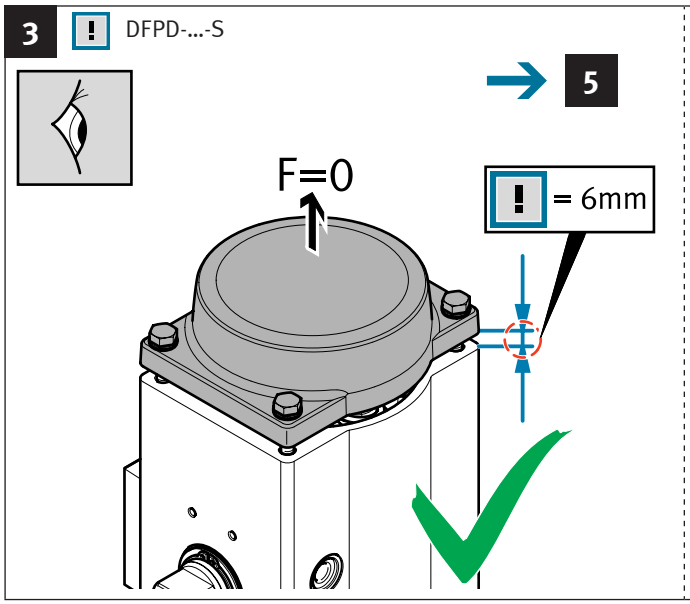

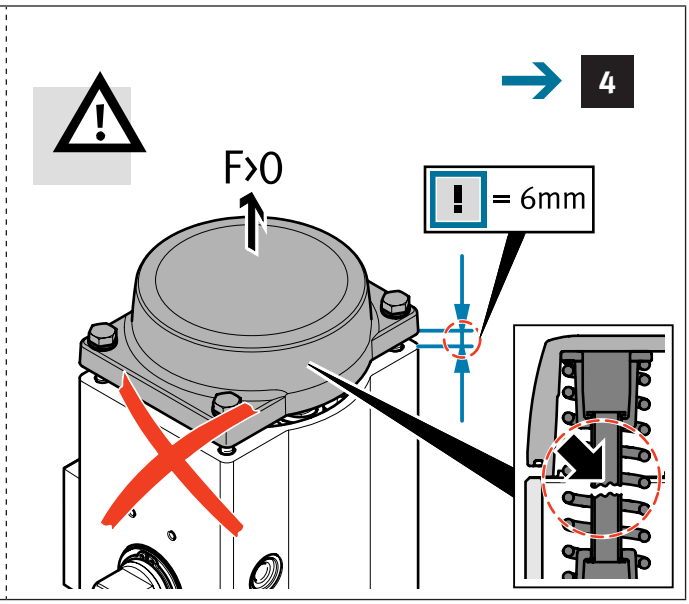

4 DFPD-...-S

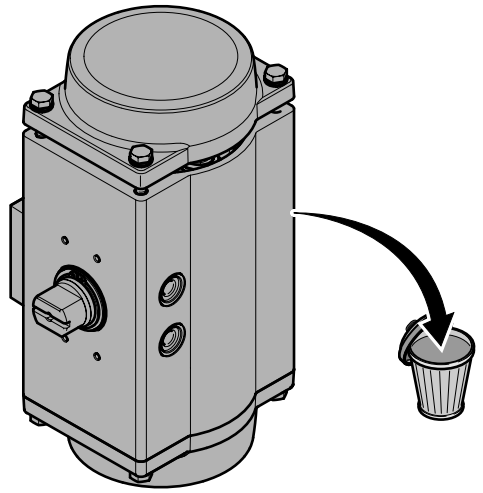

5 DFPD-...-S

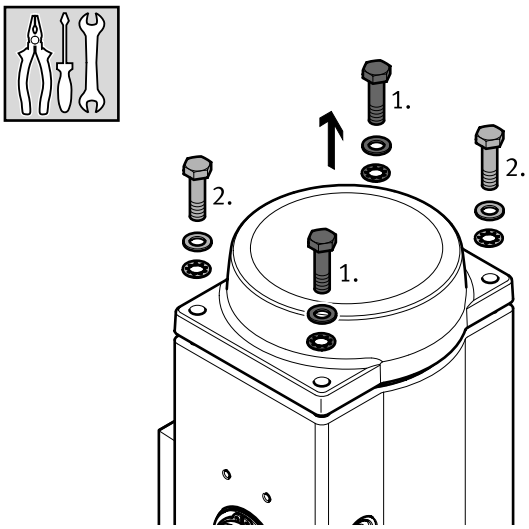

DFPD-...-D

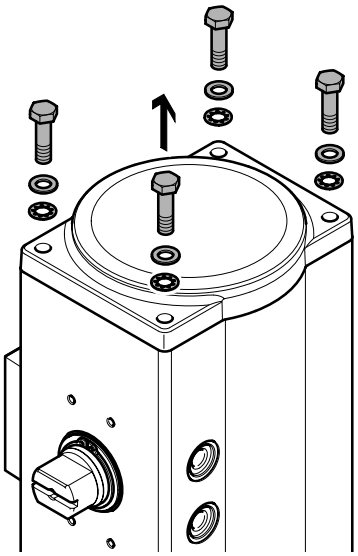

6 DFPD-700/900/1200/2300...-S

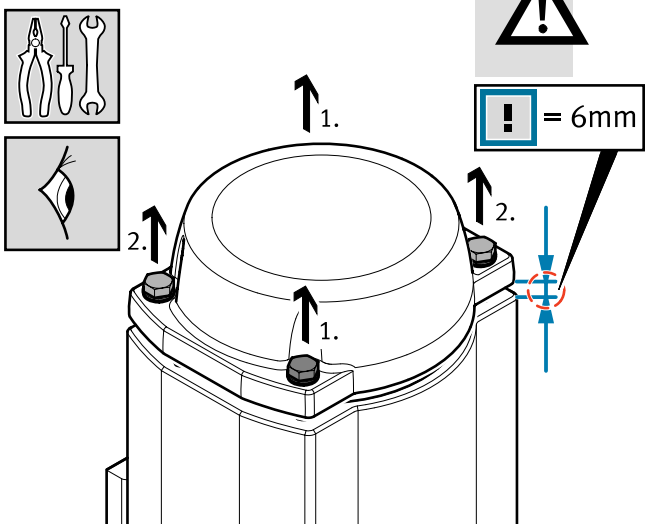

7 DFPD-700/900/1200/2300...-S

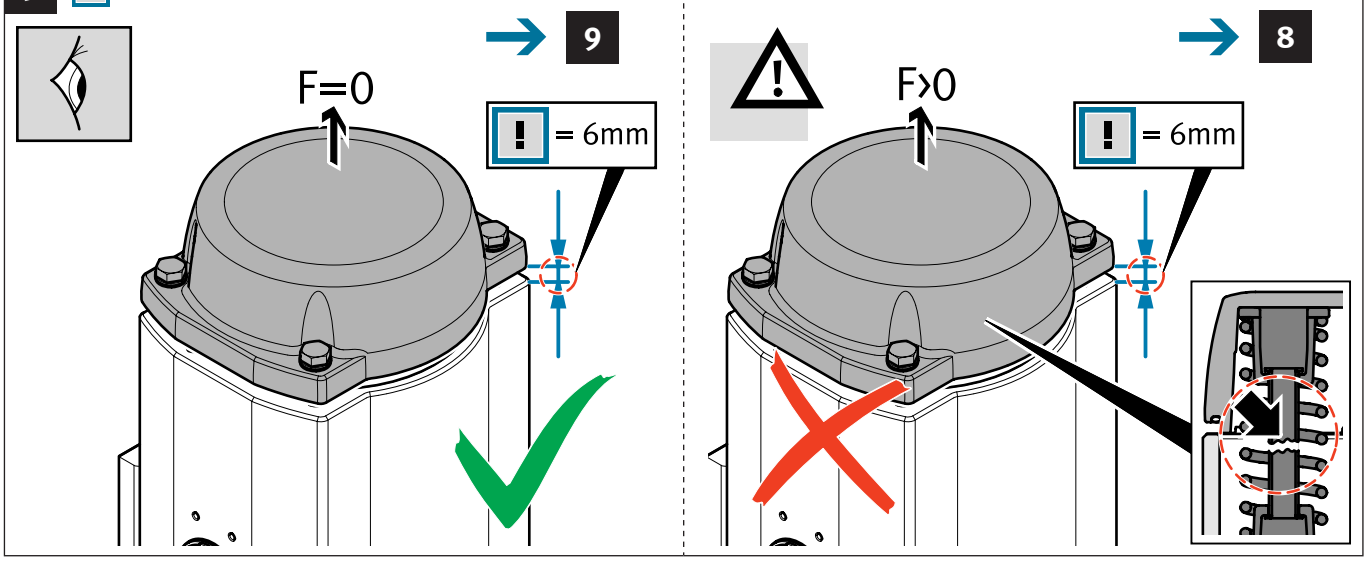

8 DFPD-700/900/1200/2300...-S

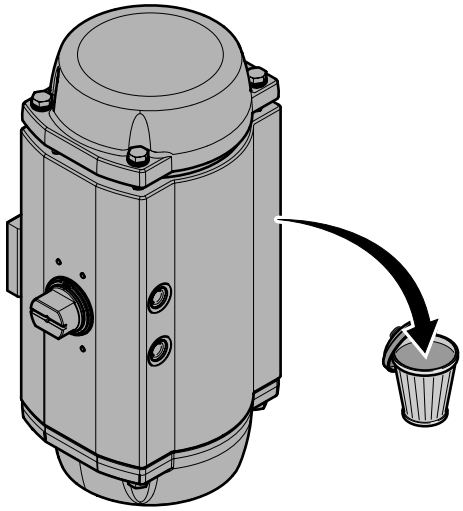

9 DFPD-700/900/1200/2300...-S

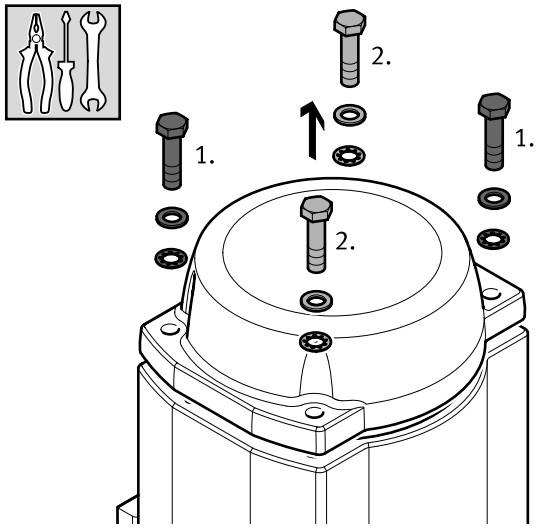

DFPD-700/900/1200/2300...-D

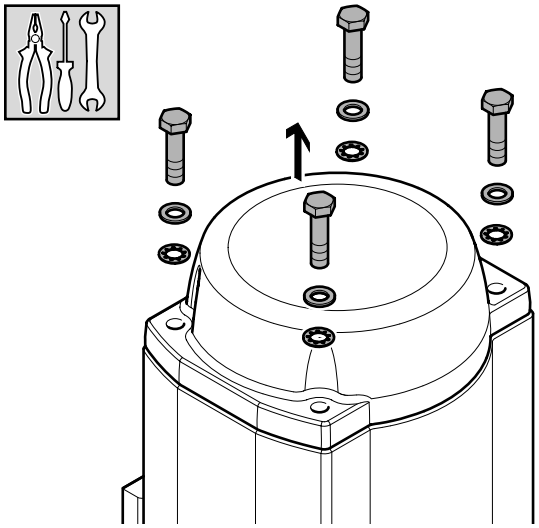

10a

DFPD-...-S

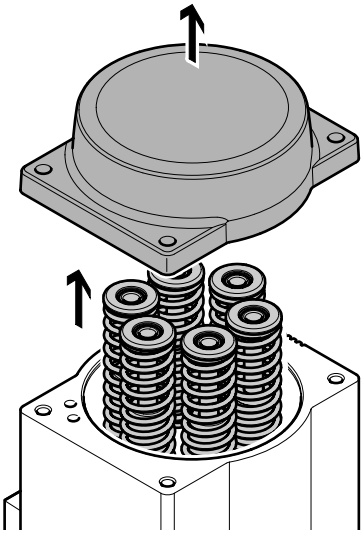

DFPD-...-D

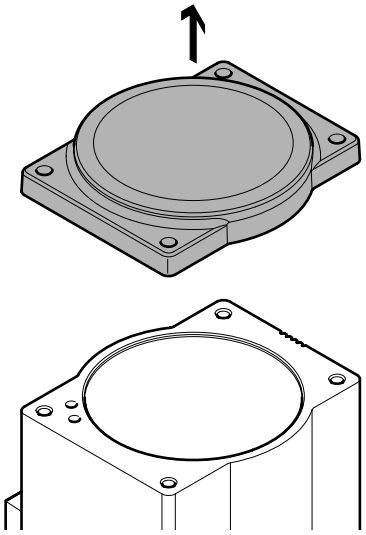

10b

DFPD-700/900/1200/2300...-S

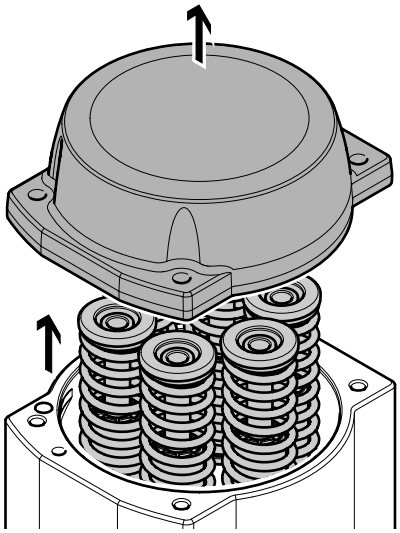

DFPD-700/900/1200/2300...-D

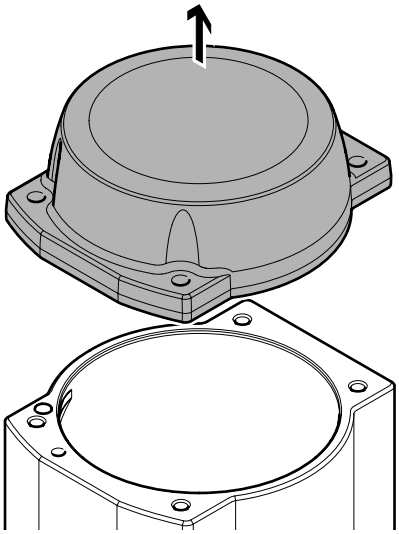

11a

DFPD-...-S

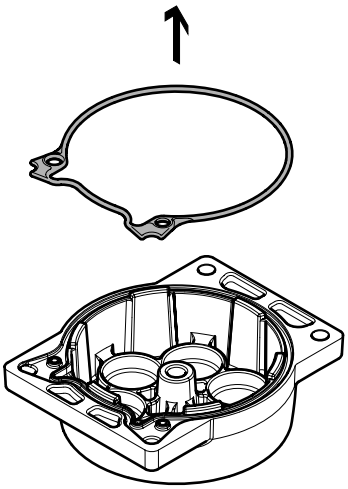

DFPD-...-D

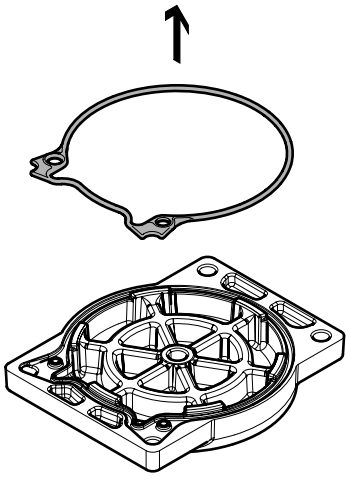

11b DFPD-700/900/1200/2300...-D+S

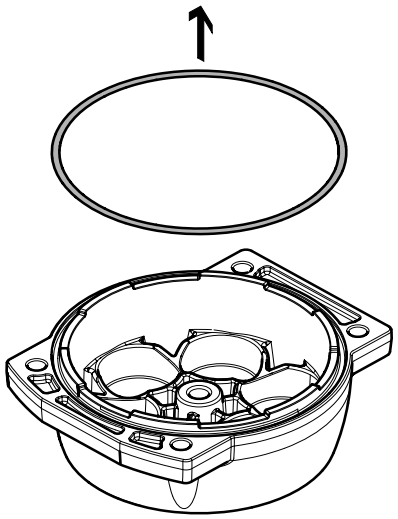

12 DFPD-...

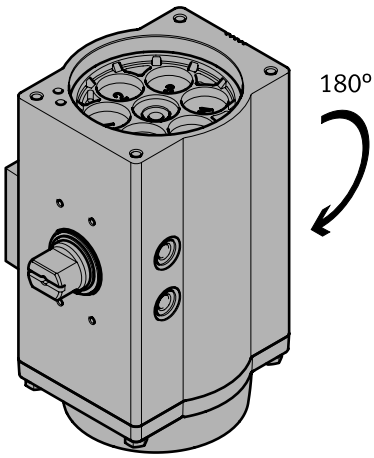

DFPD-700/900/1200/2300...

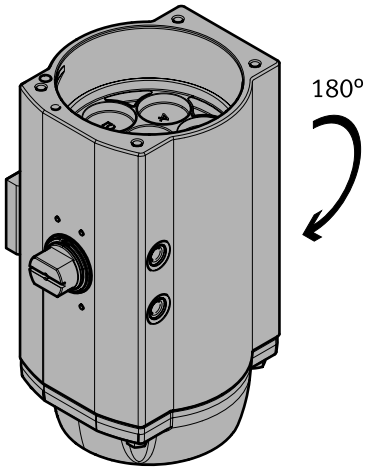

13 DFPD-...-S

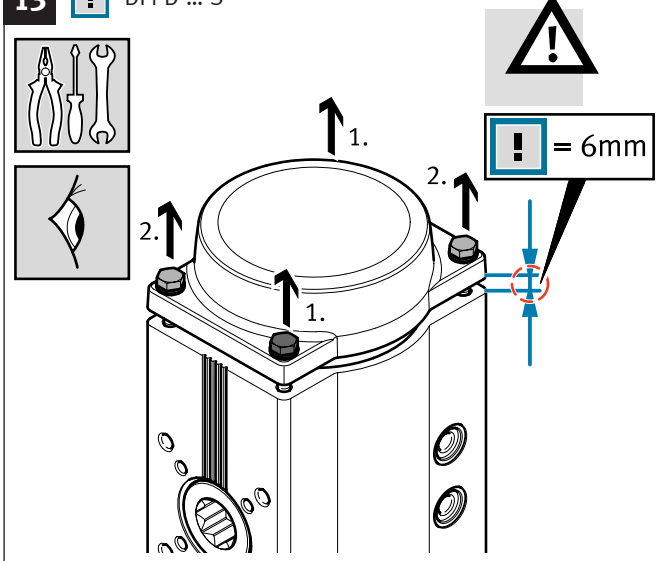

14 DFPD-...-S

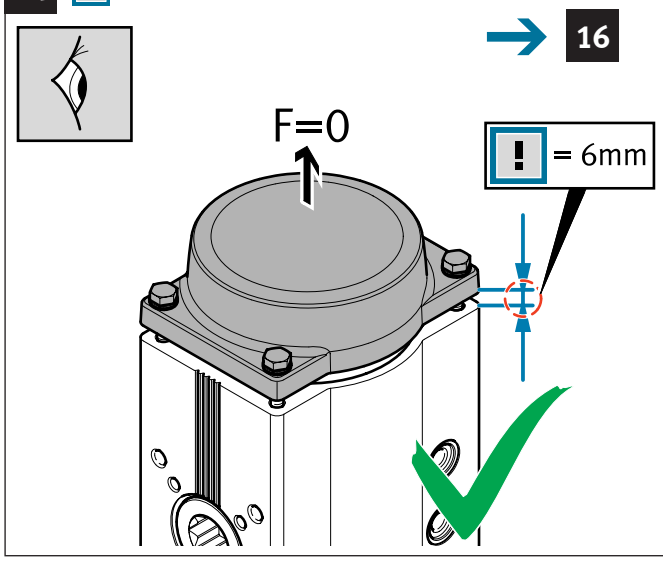

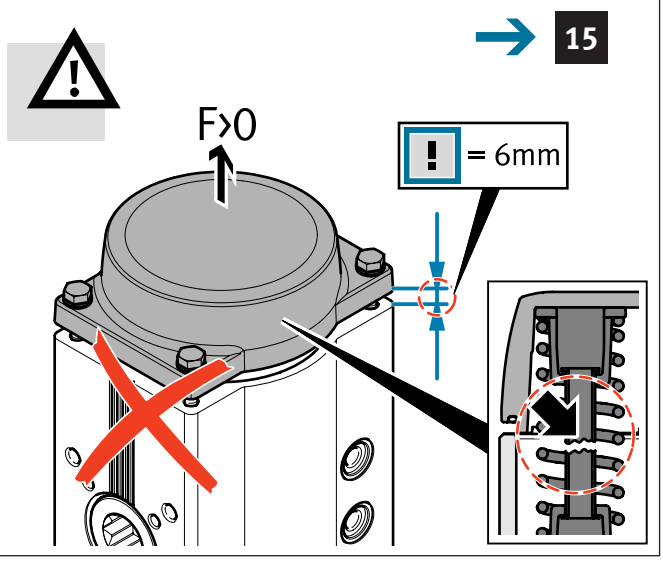

15 DFPD-...-S

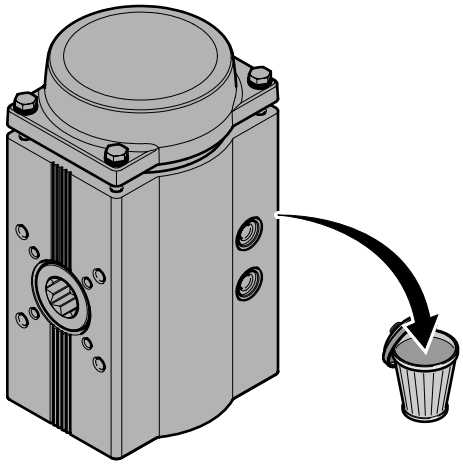

16 DFPD-...-S

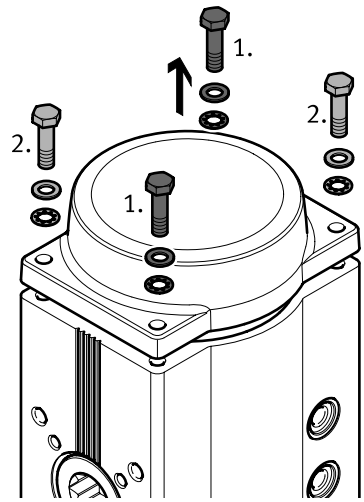

DFPD-...-D

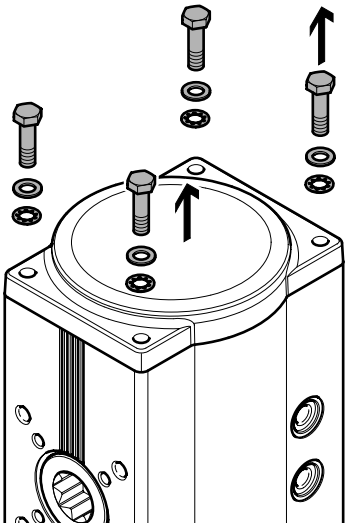

17 DFPD-700/900/1200/2300...-S

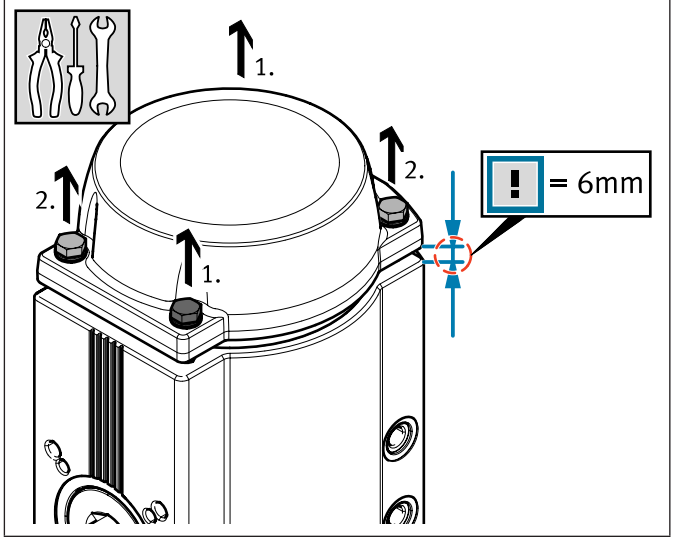

18 DFPD-700/900/1200/2300...-S

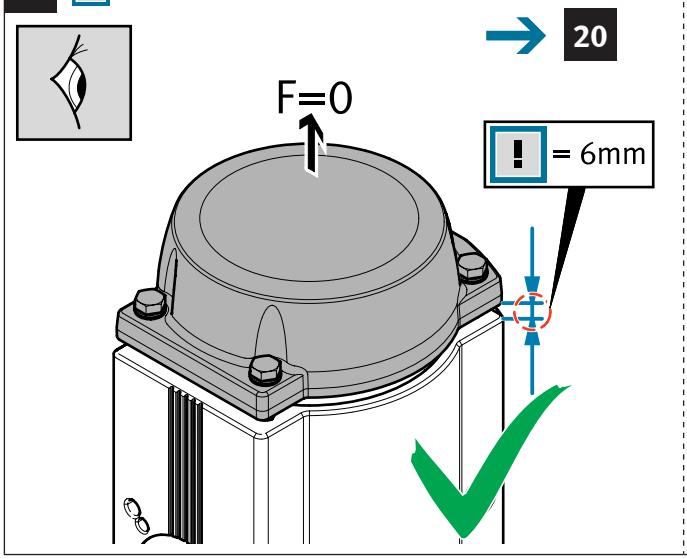

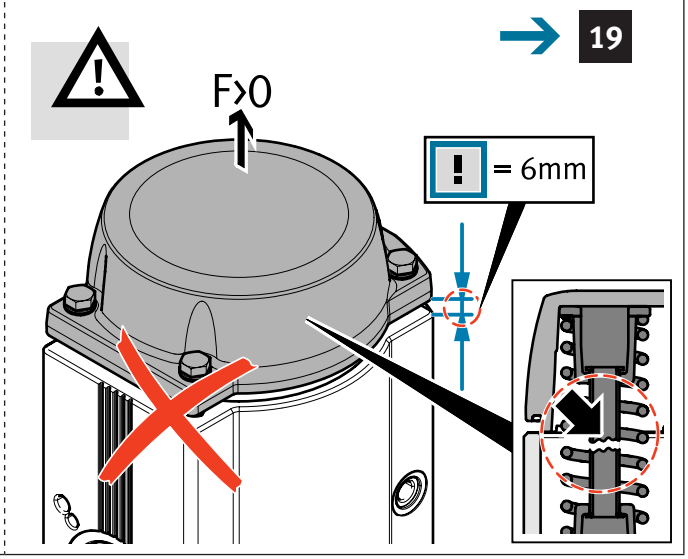

19 DFPD-700/900/1200/2300...-S

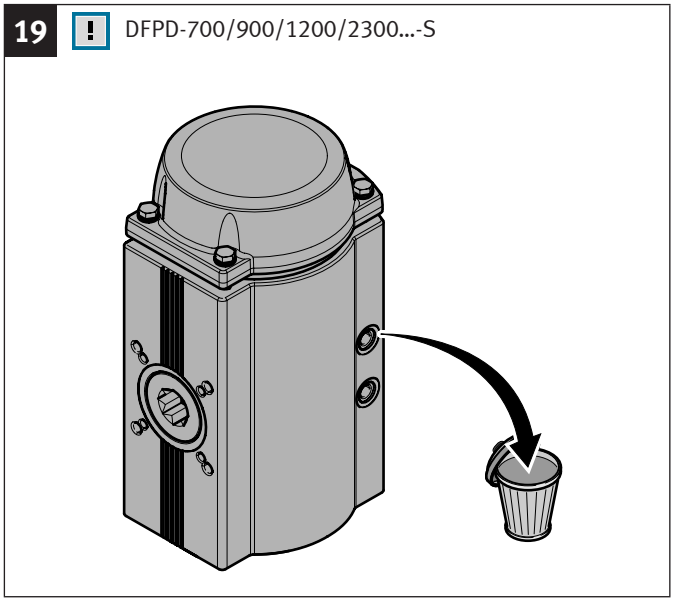

20 DFPD-700/900/1200/2300...-S

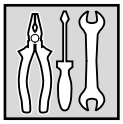

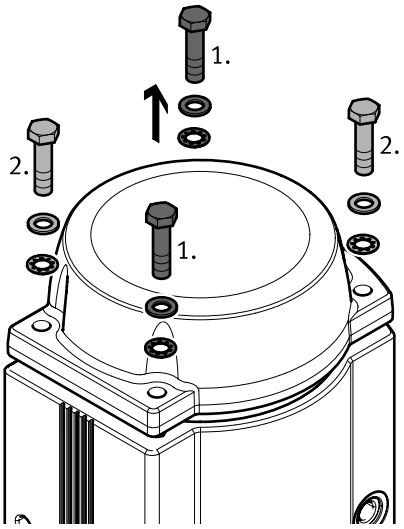

DFPD-700/900/1200/2300...-D

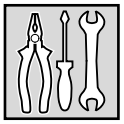

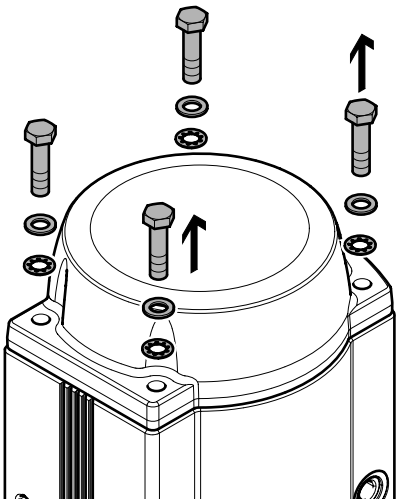

21a DFPD-...-S

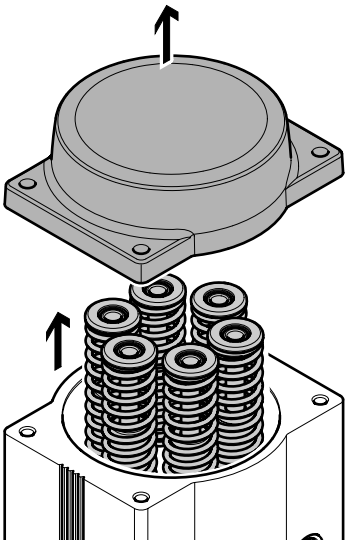

DFPD-...-D

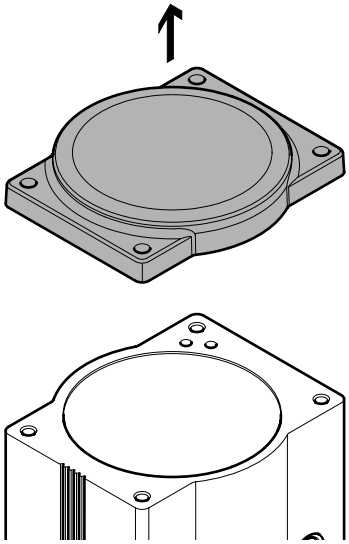

21b DFPD-700/900/1200/2300...-S

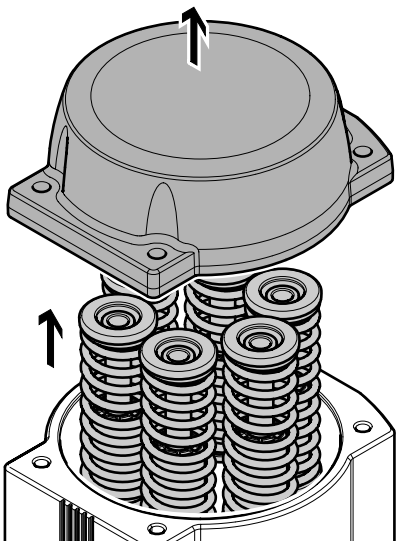

DFPD-700/900/1200/2300...-D

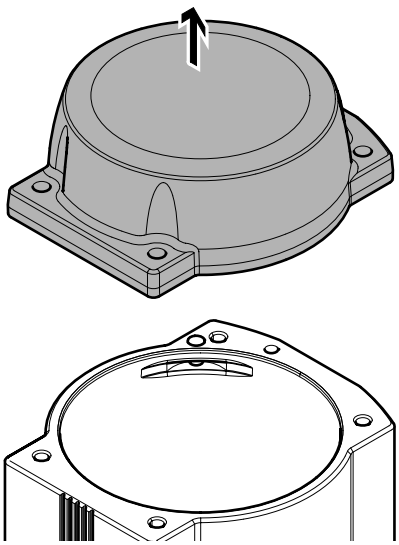

22a DFPD-...-S

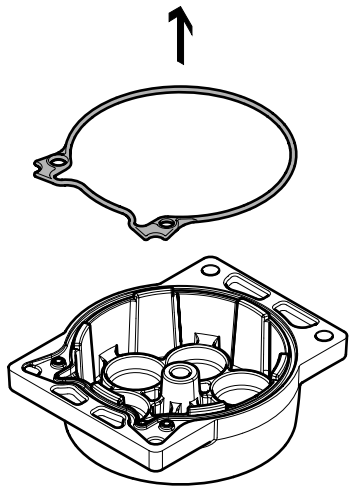

DFPD-...-D

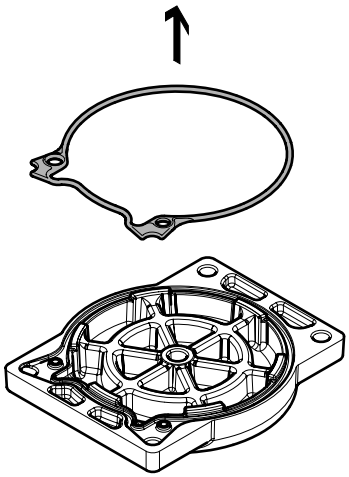

22b DFPD-700/900/1200/2300...-D+S

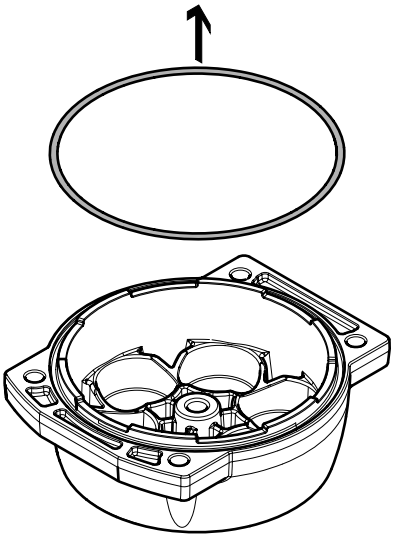

23 DFPD-...-D + S

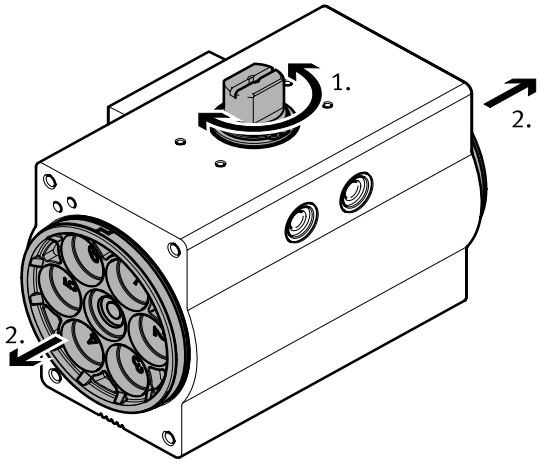

24 DFPD-...-90°

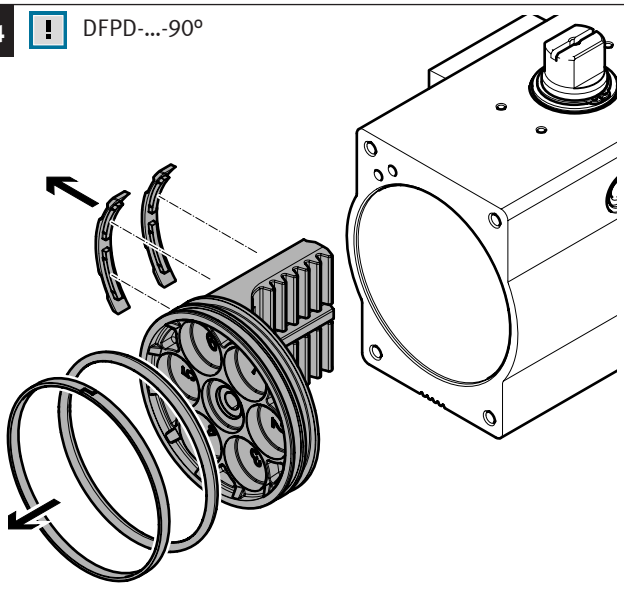

DFPD-...-120°/135°/180°

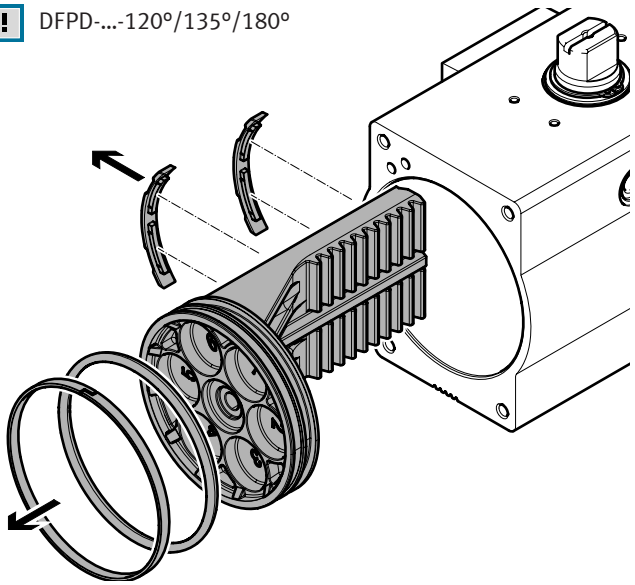

25 DFPD-...-90°

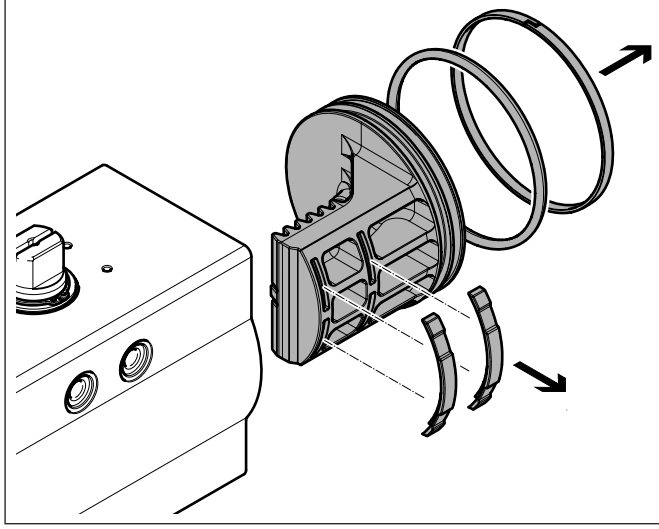

DFPD-...-120°/135°/180°

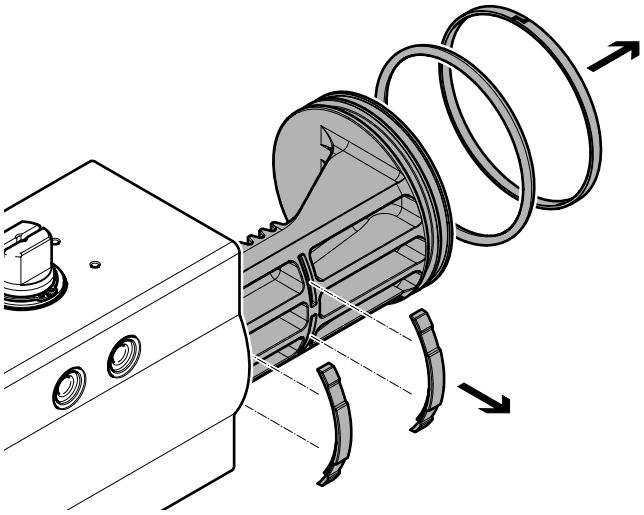

26

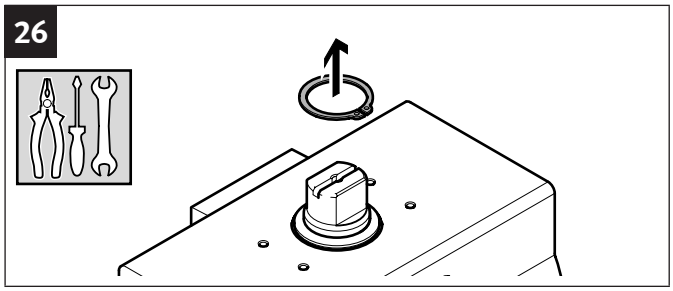

27

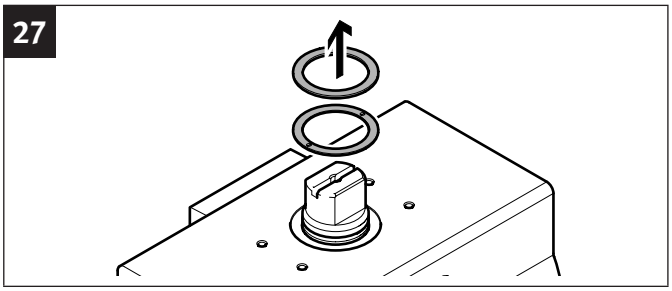

28

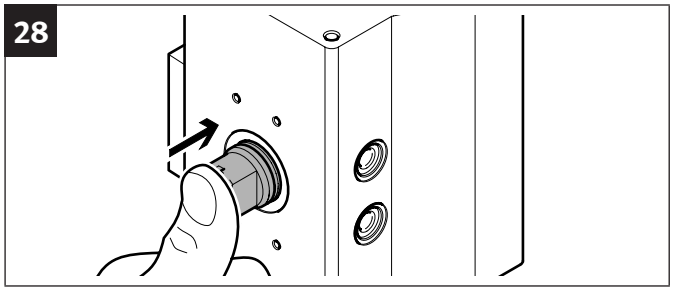

29a DFPD-...-90°

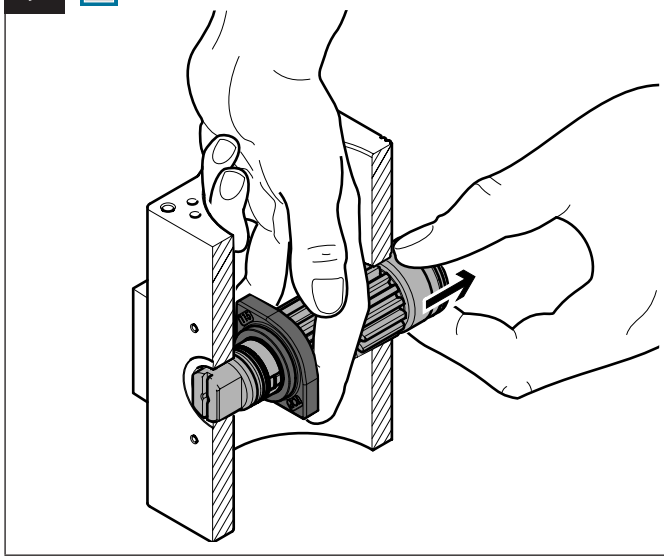

DFPD-...-120°

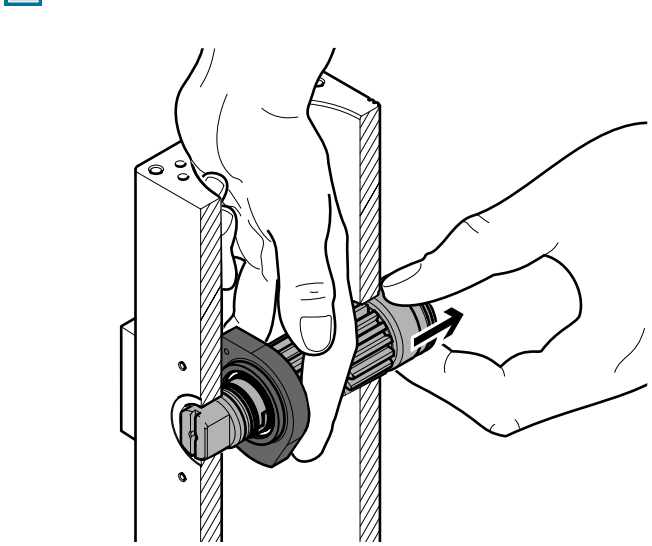

29b

DFPD-...-135°

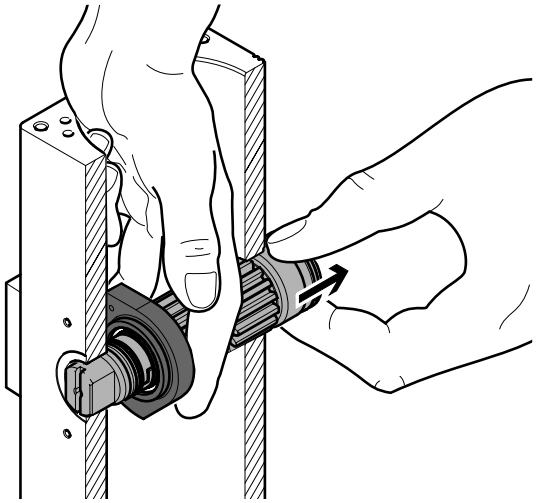

DFPD-...-180°

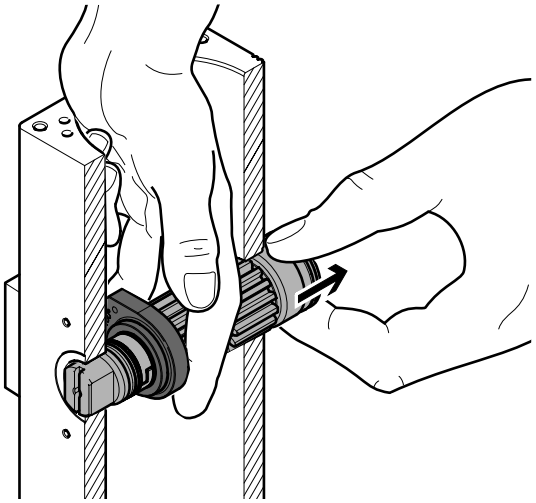

30a

DFPD-...-90°

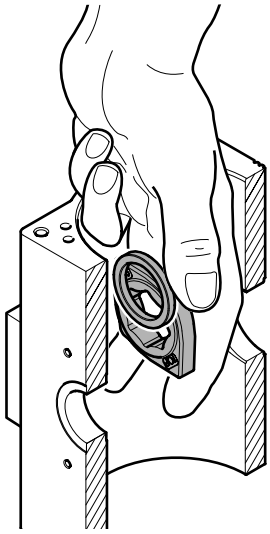

DFPD-...-120°

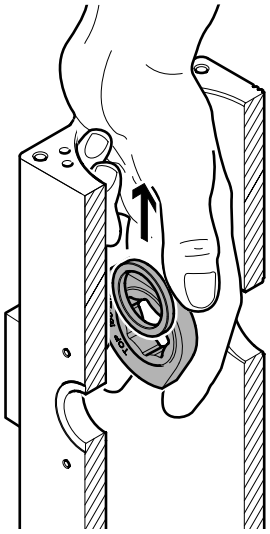

30b

DFPD-...-135°

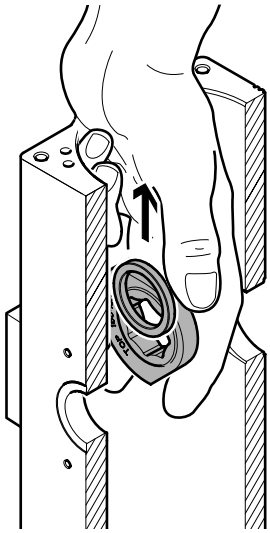

DFPD-...-180°

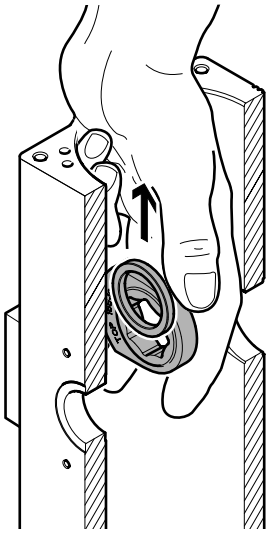

31

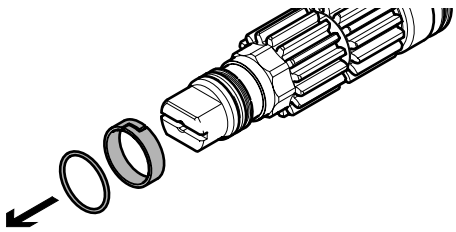

32

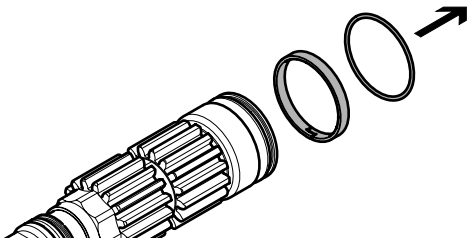

33

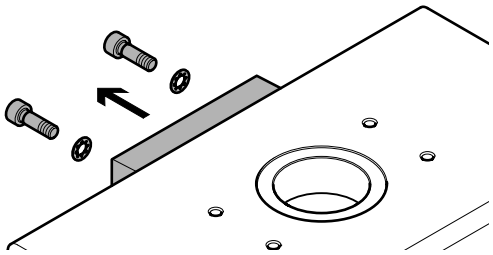

34a

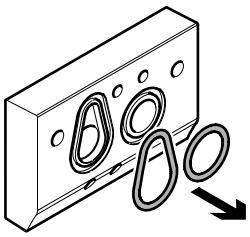

34b DFPD-700/900/1200/2300

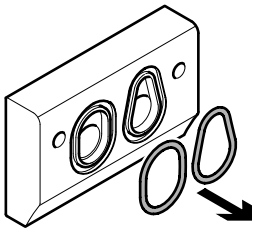

35a

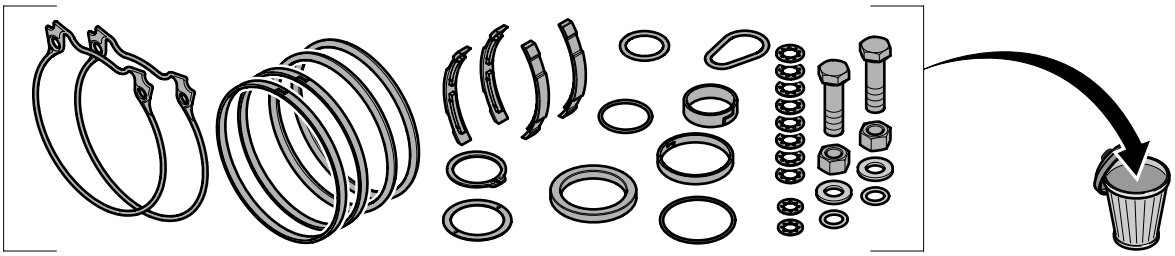

35b DFPD-700/900/1200/2300

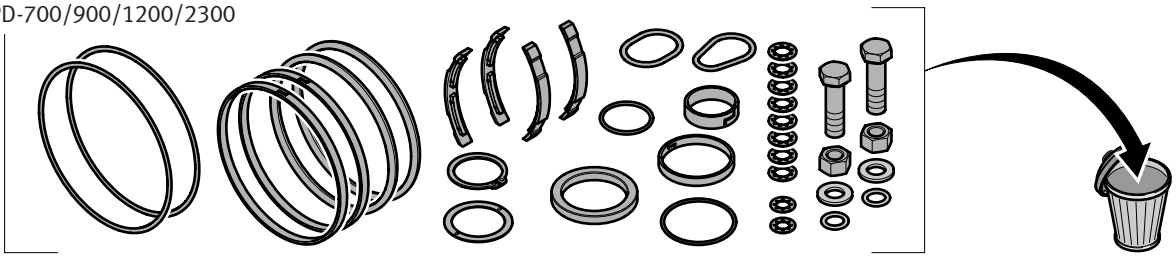

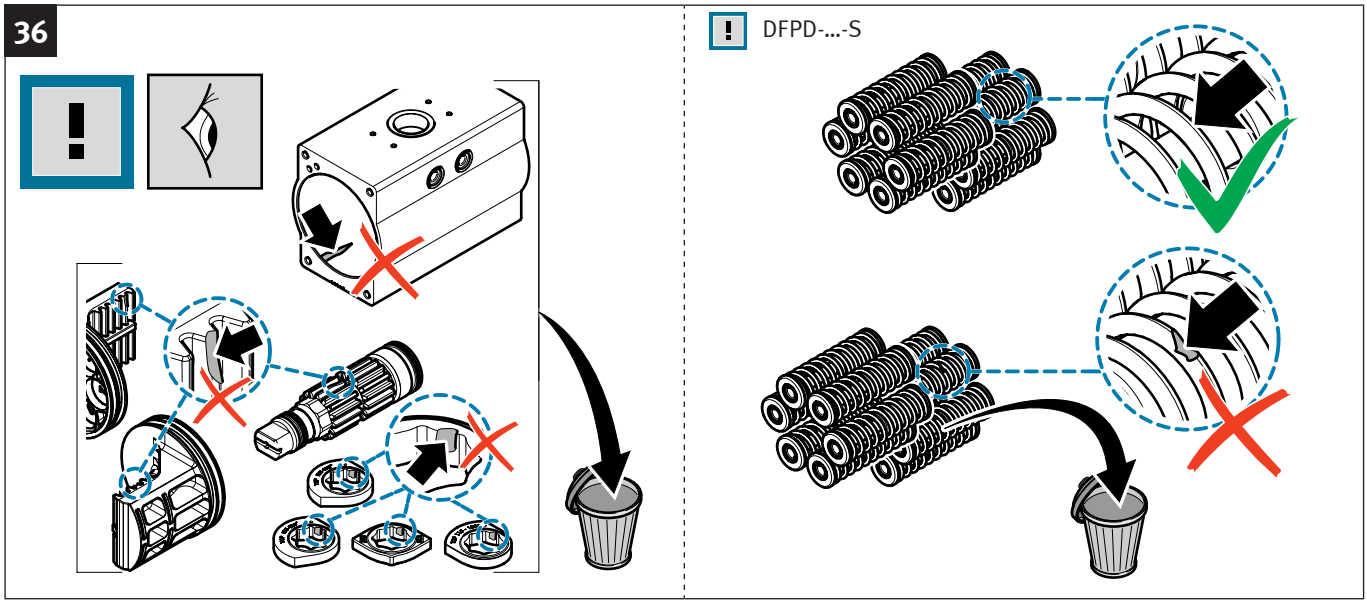

4.2 Assembly

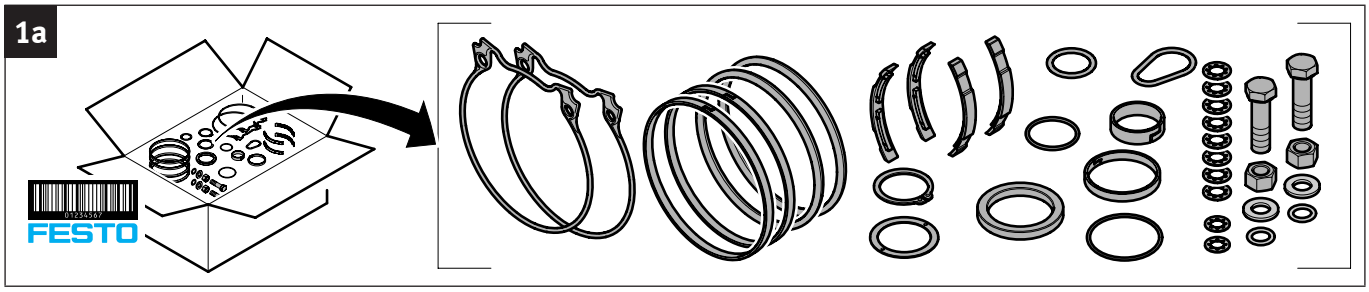

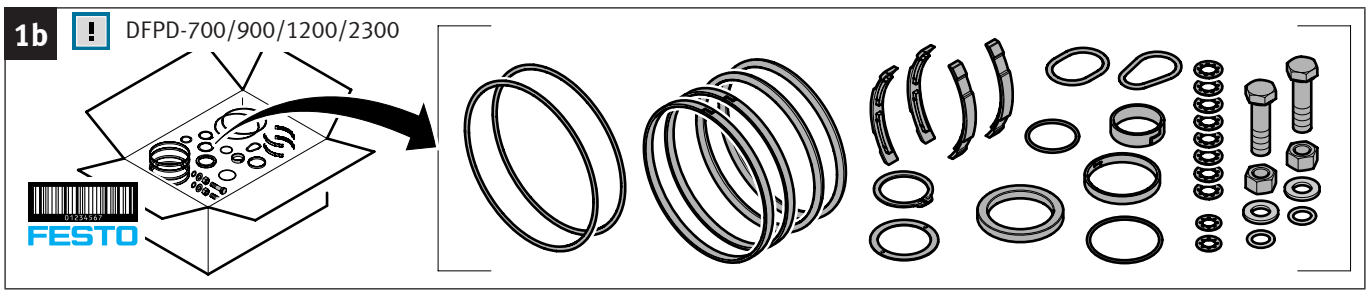

2

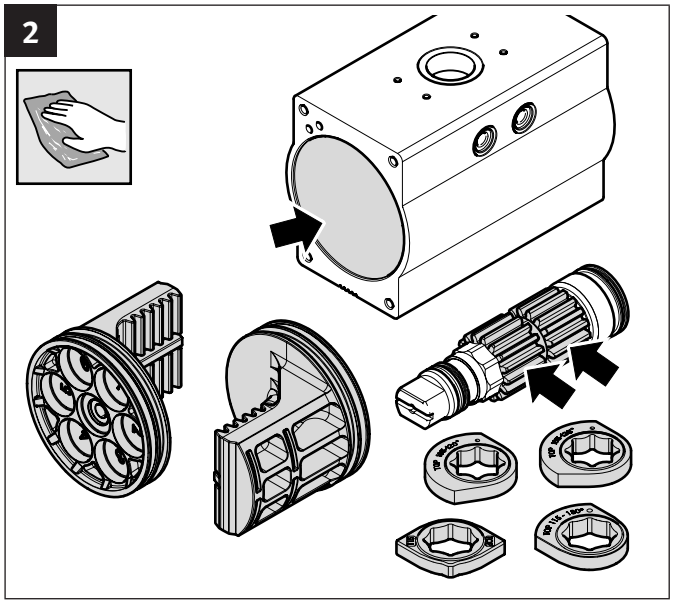

3a

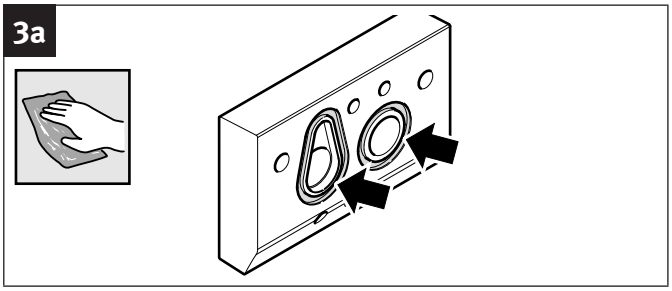

3b DFPD-700/900/1200/2300

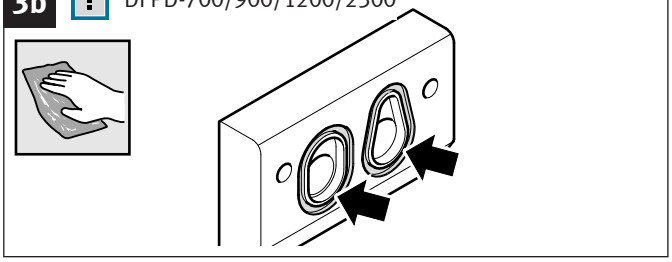

4

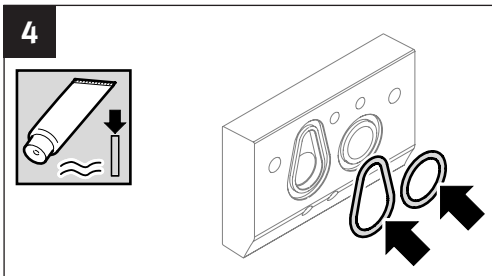

DFPD-700/900/1200/2300

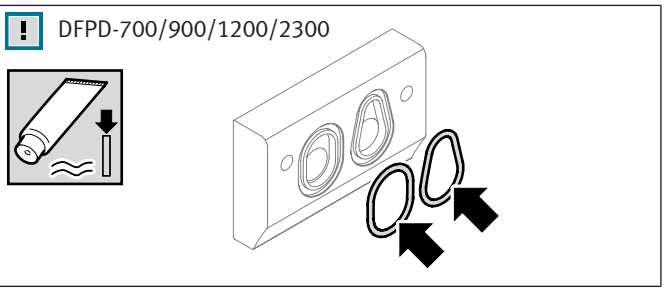

5

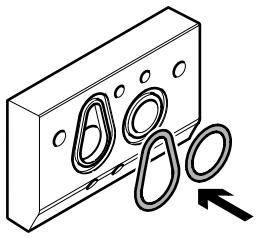

DFPD-700/900/1200/2300

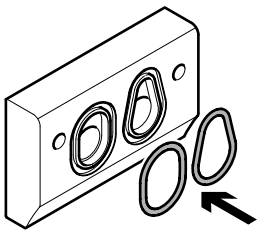

6

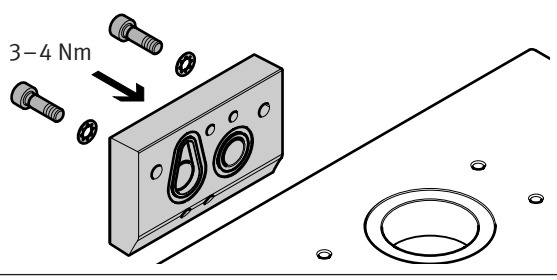

DFPD-700/900/1200/2300

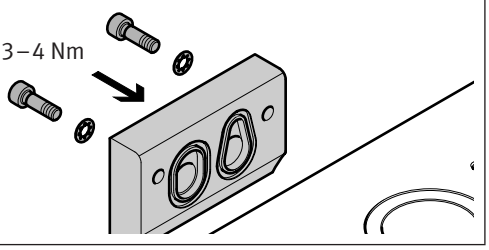

i

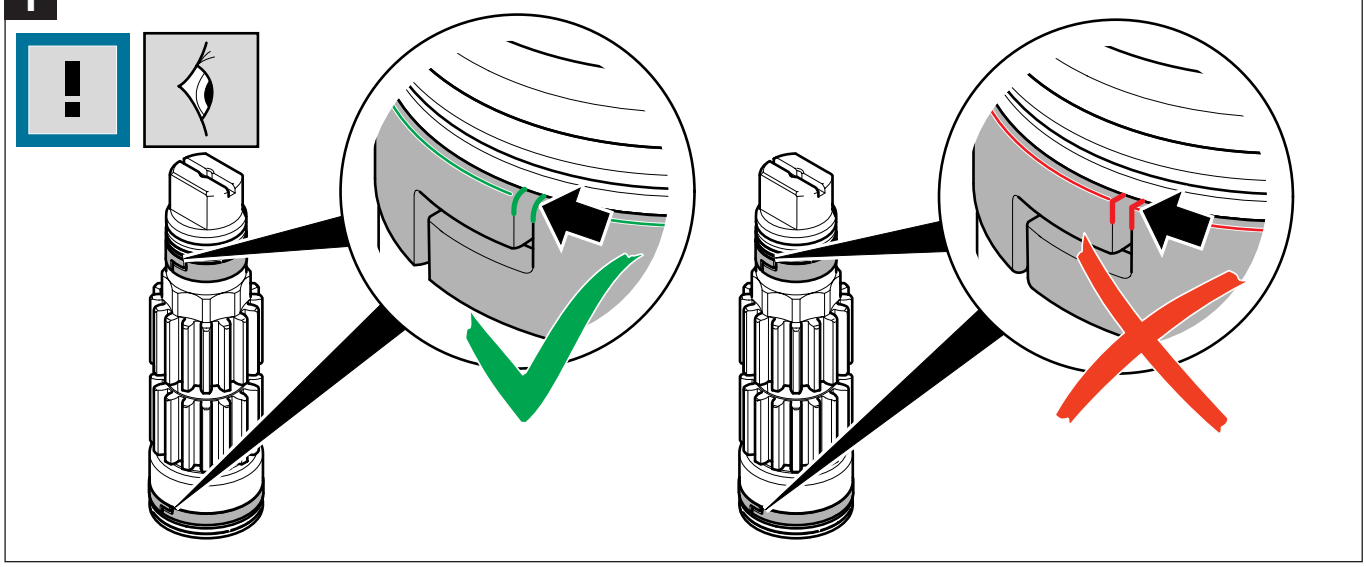

7

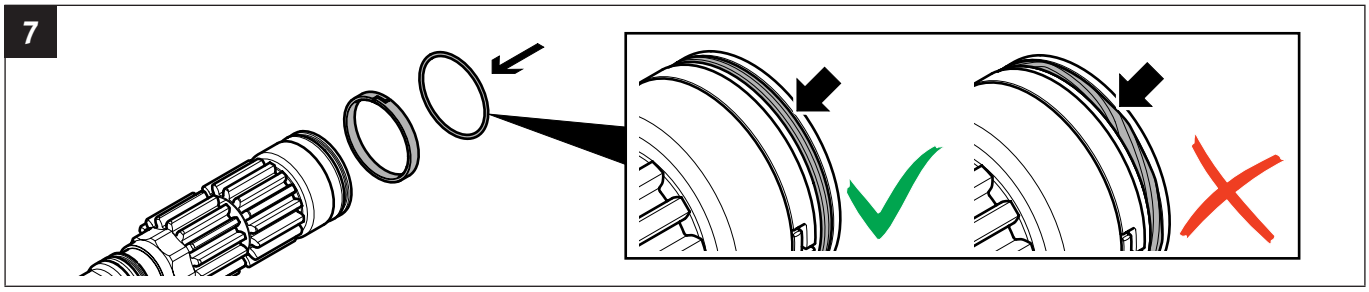

8

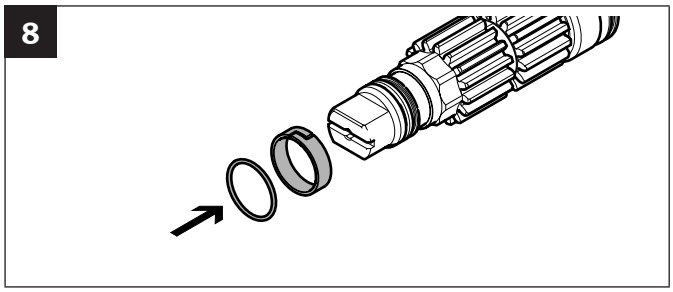

9

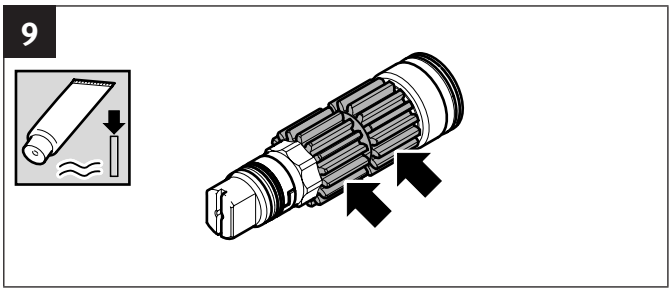

10a

DFPD-...-90°-R

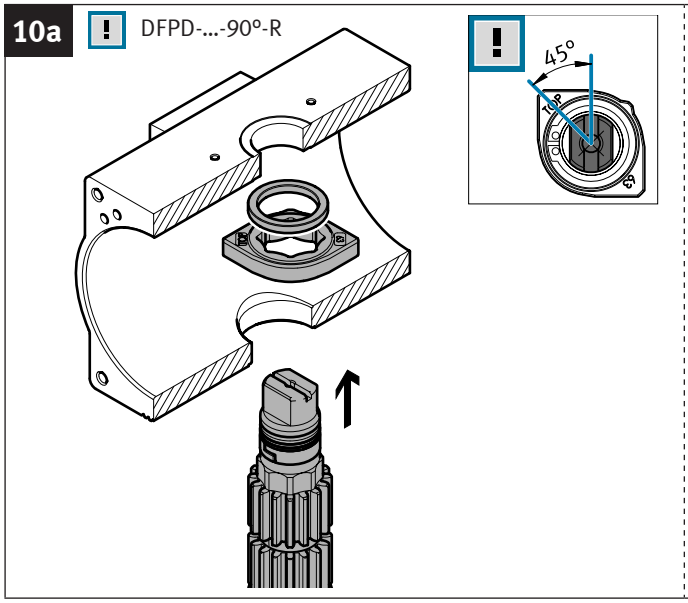

DFPD-...-90°-L

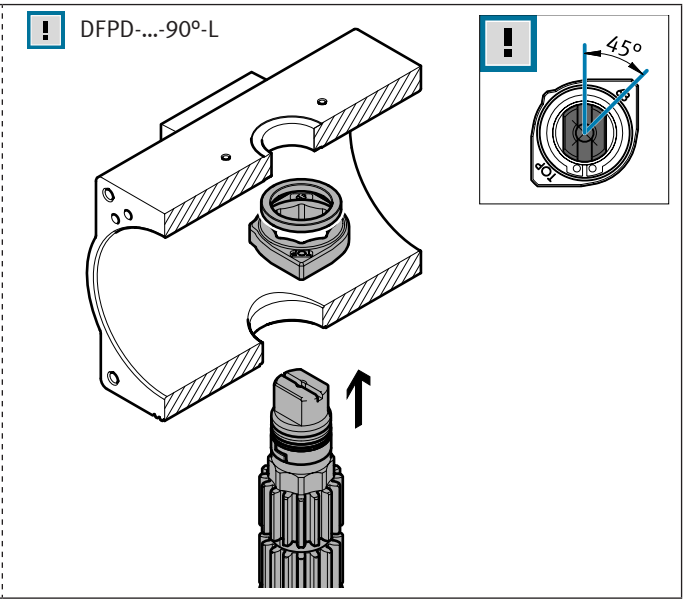

10b DFPD-...-120°-R

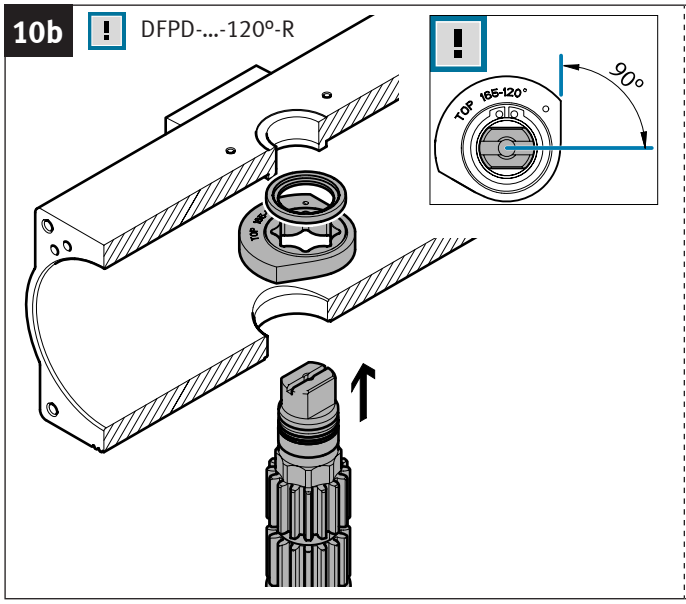

DFPD-...-120°-L

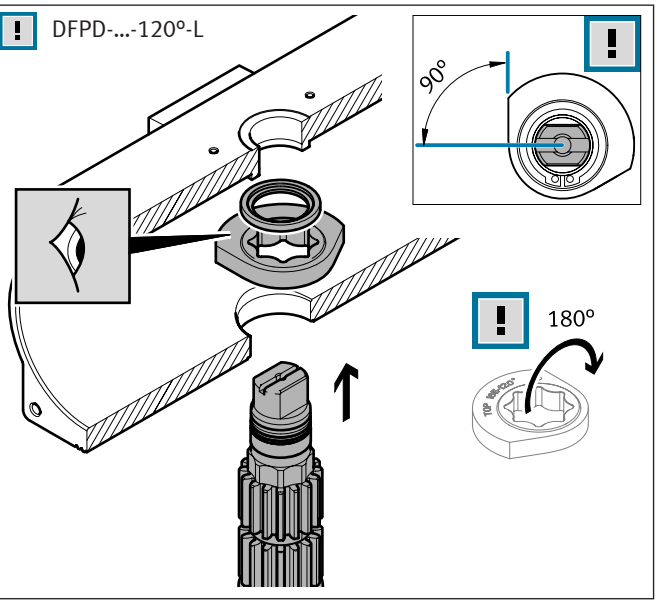

10c DFPD-...-135°-R

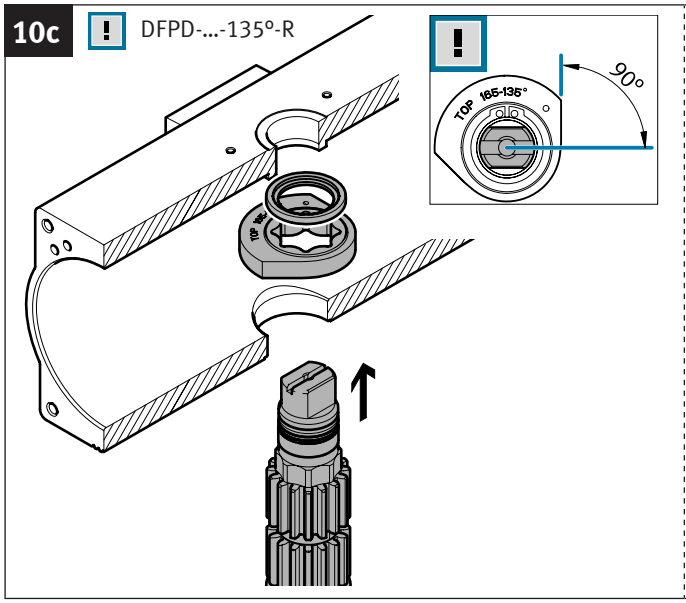

DFPD-...-135°-L

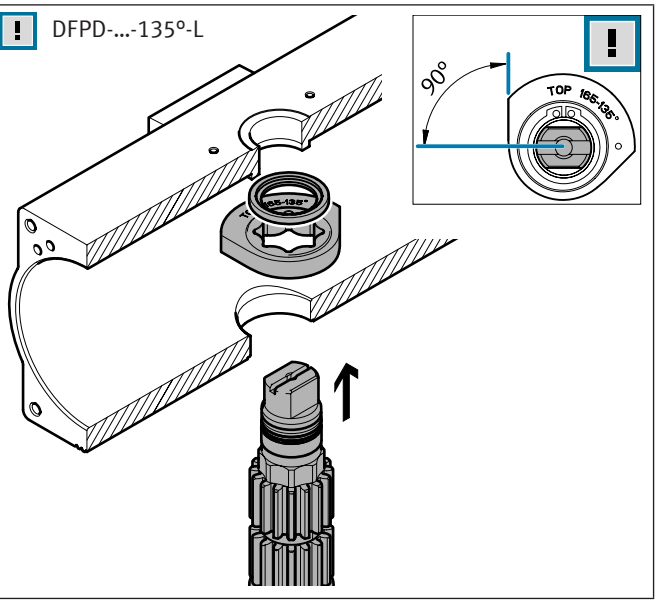

10d DFPD-...-180°-L/R

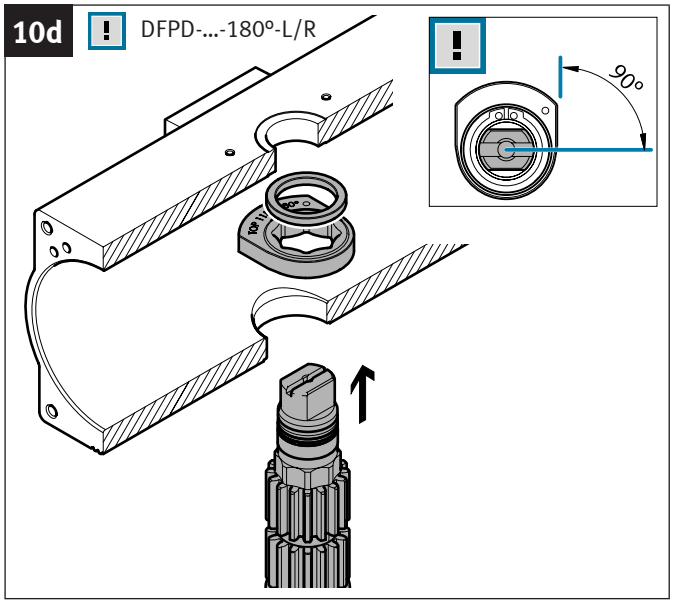

11

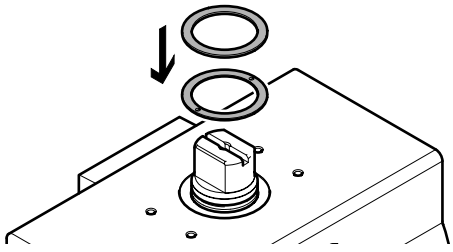

12

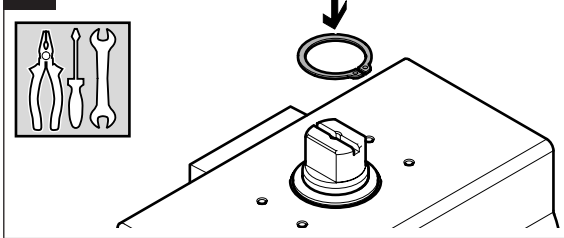

13

DFPD-...-90°

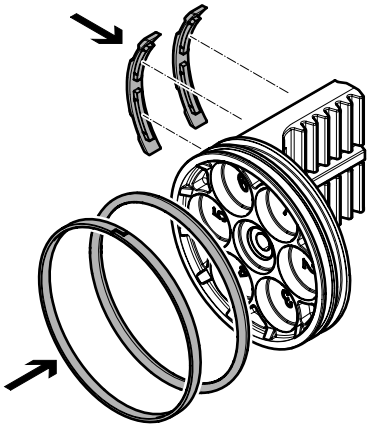

DFPD-...-120°/135°/180°

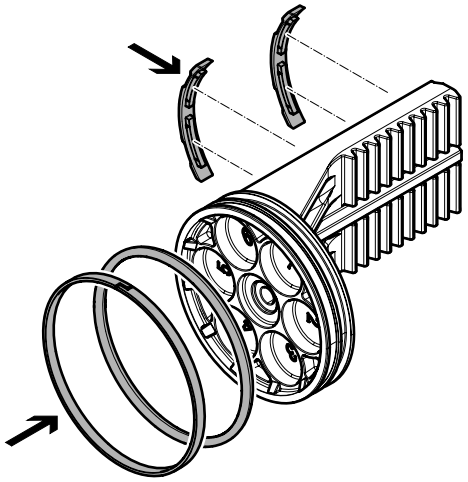

14

DFPD-...-90°

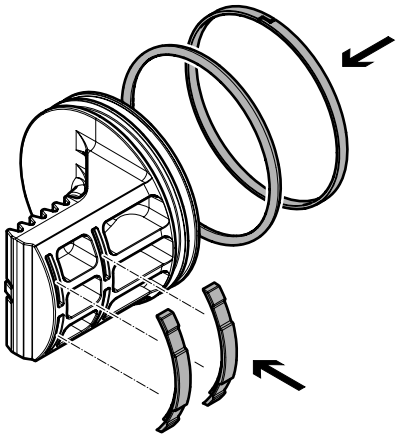

DFPD-...-120°/135°/180°

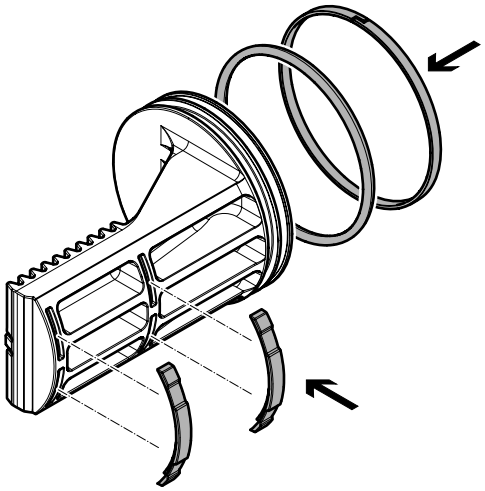

15

DFPD-...-90°

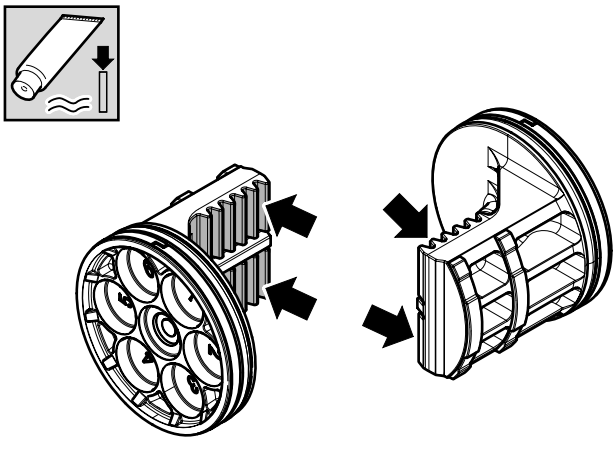

DFPD-...-120°/135°/180°

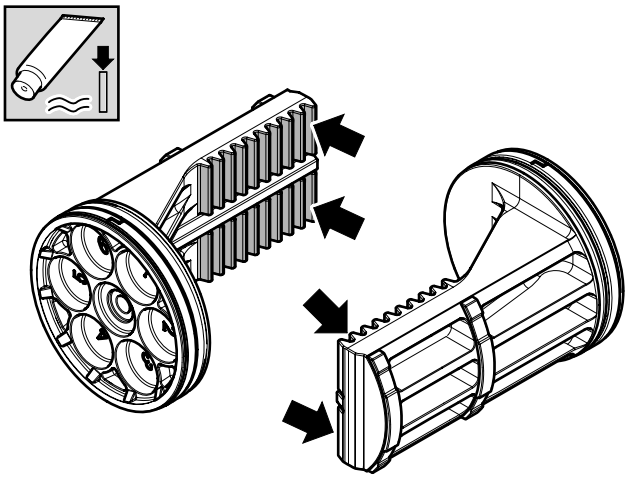

16a

DFPD-...-90°-R

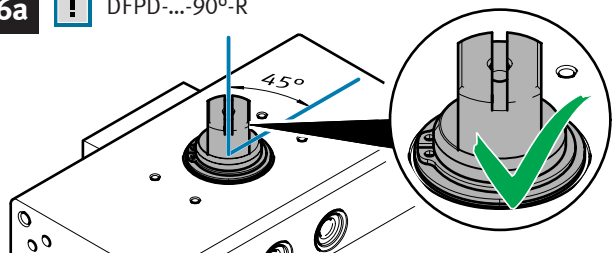

DFPD-...-90°-L

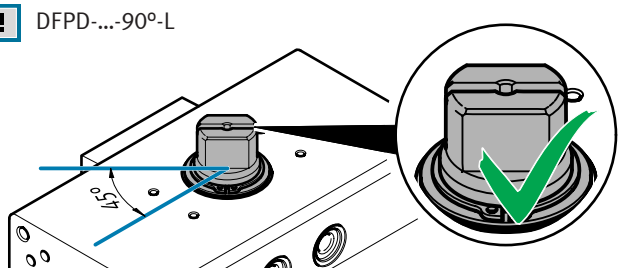

DFPD-...-90°-R

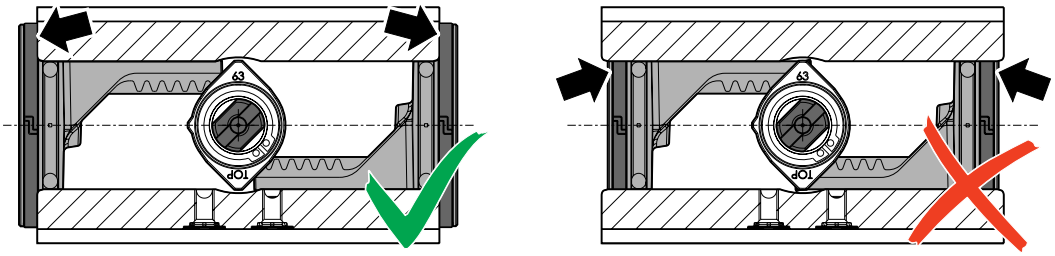

DFPD-...-90°-L

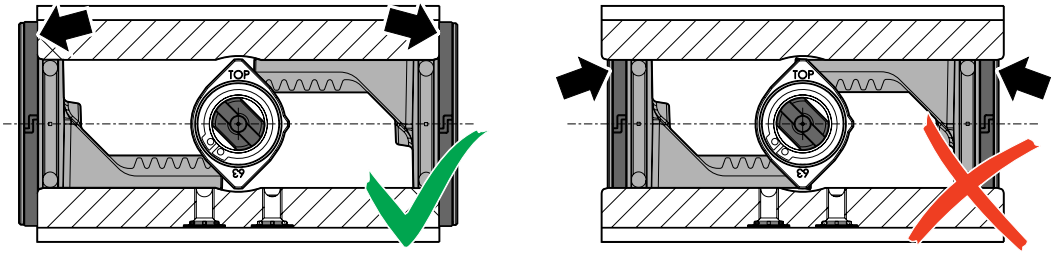

17a

DFPD-...-90°-R

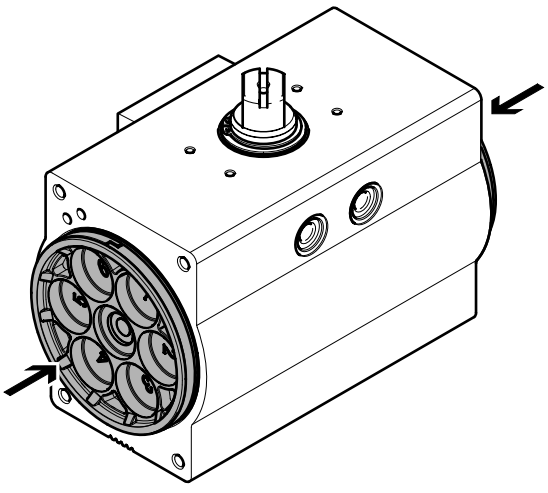

DFPD-...-90°-L

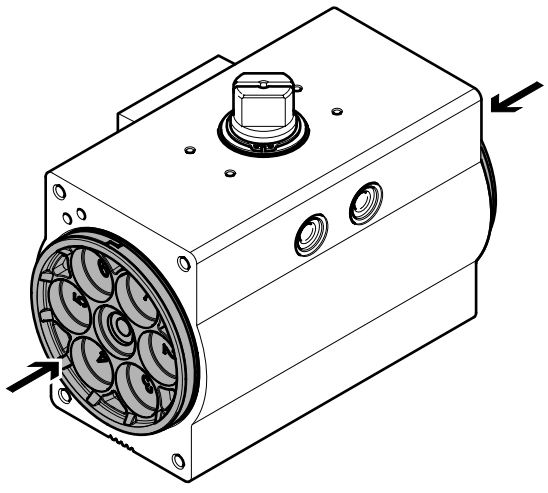

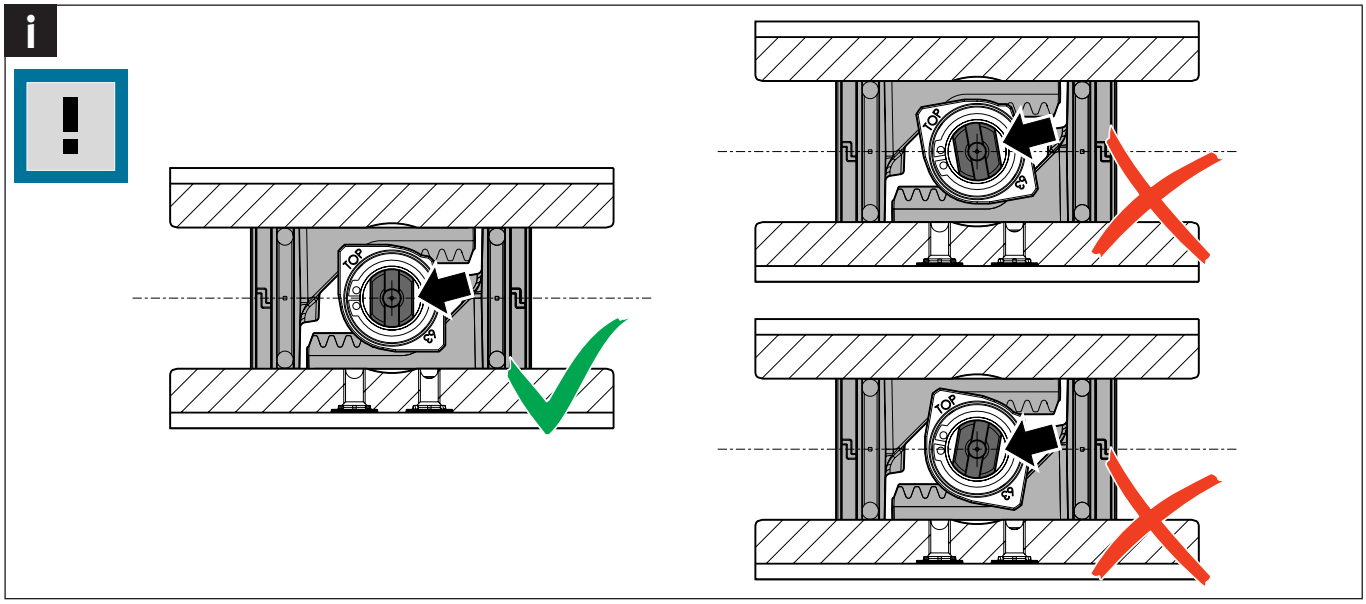
TOP
45°

16b

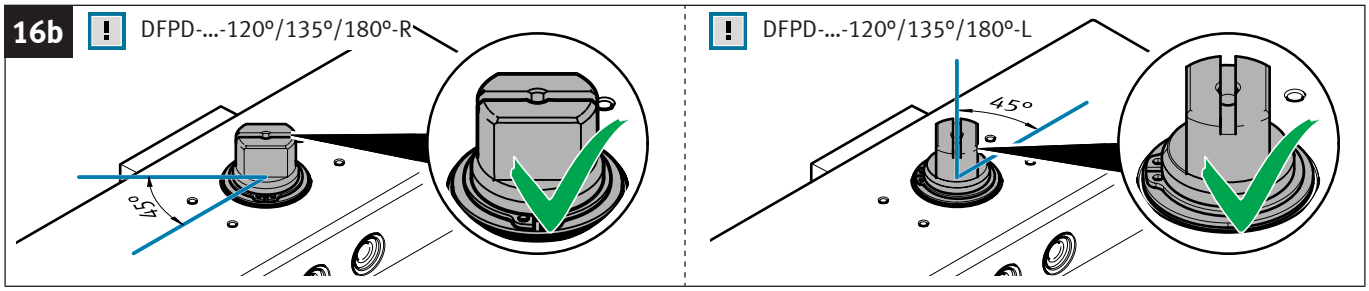
DFPD-...-120°/135°/180°-R
45°
DFPD-...-120°/135°/180°-L
45°

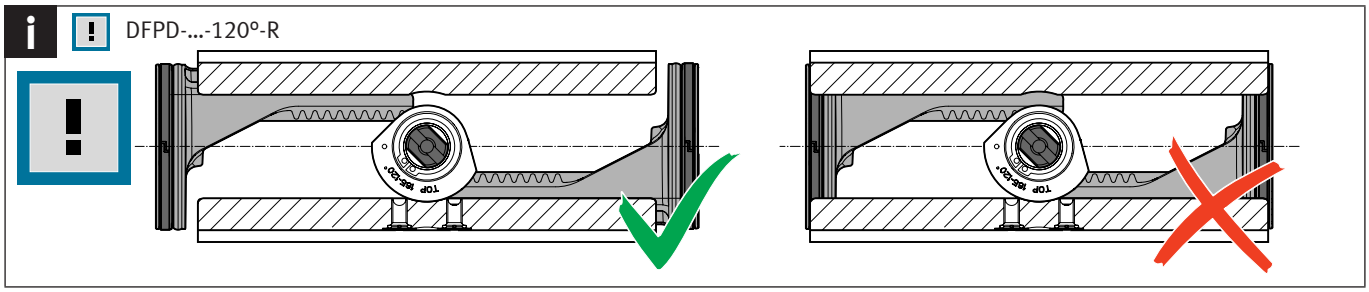
DFPD-...-120°-R

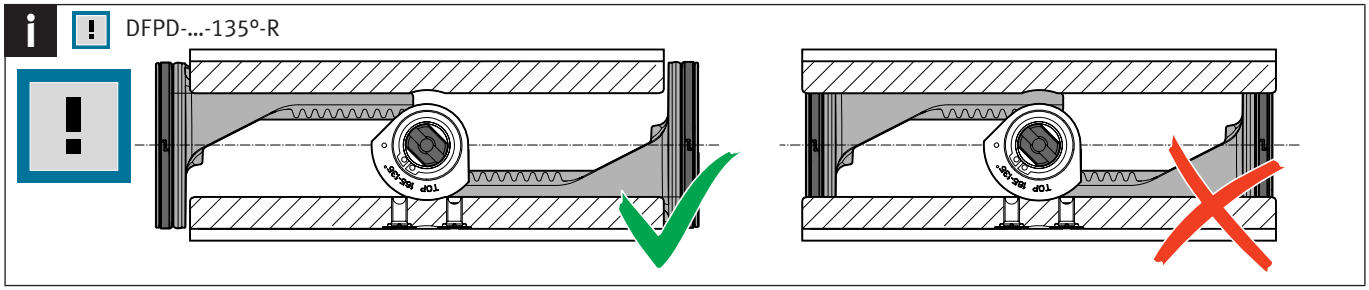
DFPD-...-135°-R

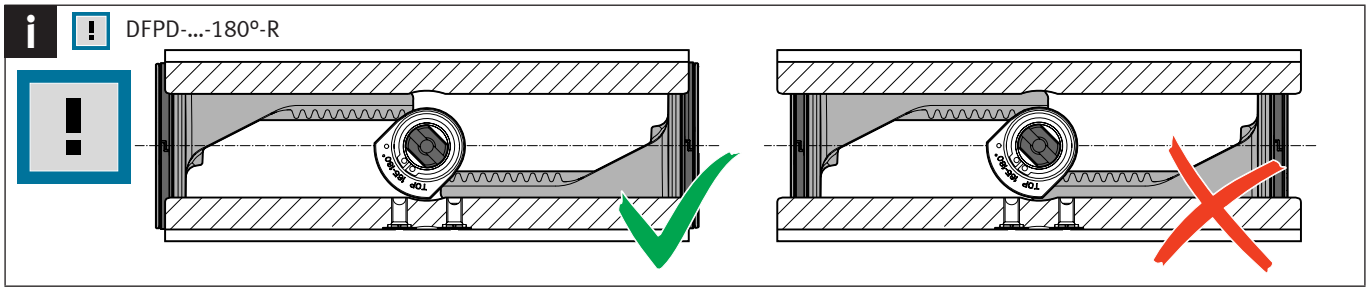
DFPD-...-180°-R

i DFPD-...-120°-L

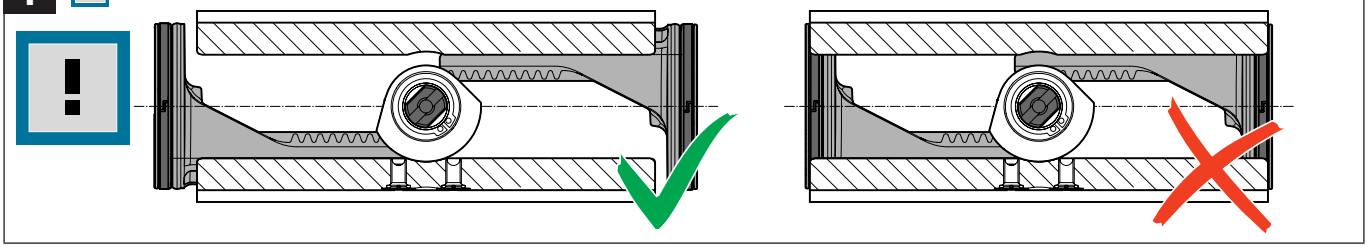

i DFPD-...-135°-L

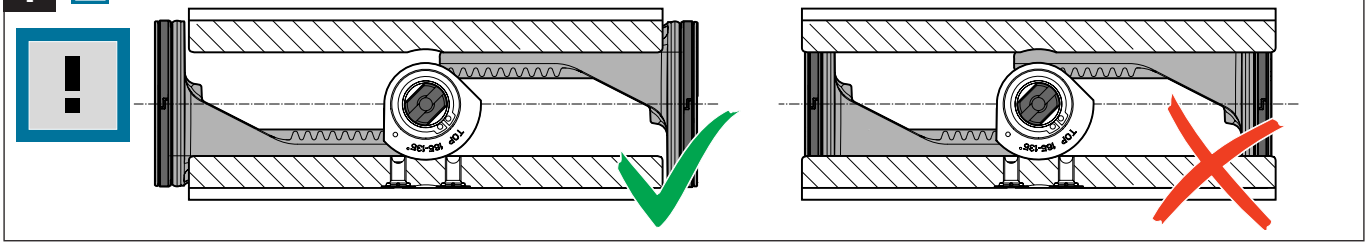

i DFPD-...-180°-L

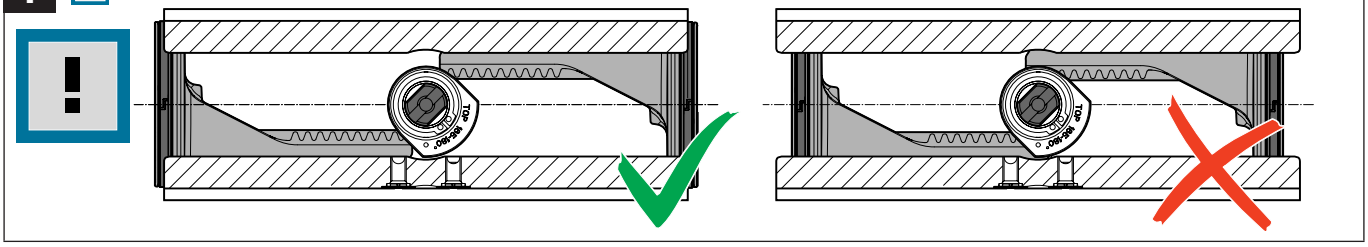

17b DFPD-...-120°/135°/180°-R

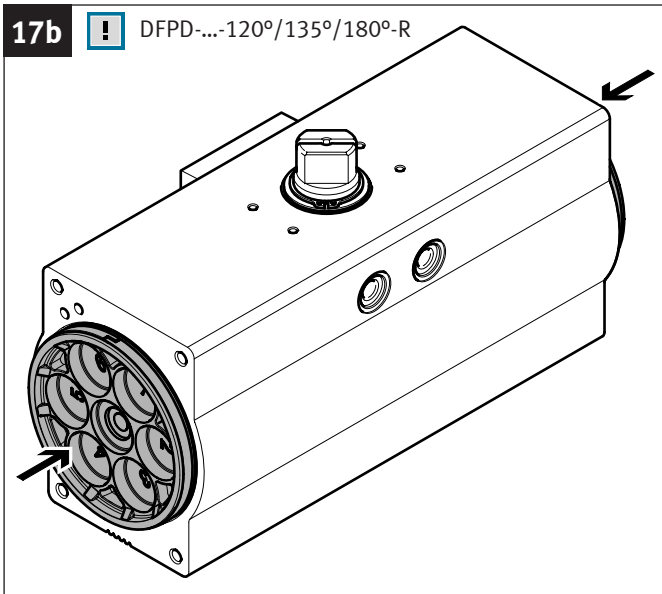

DFPD-...-120°/135°/180°-L

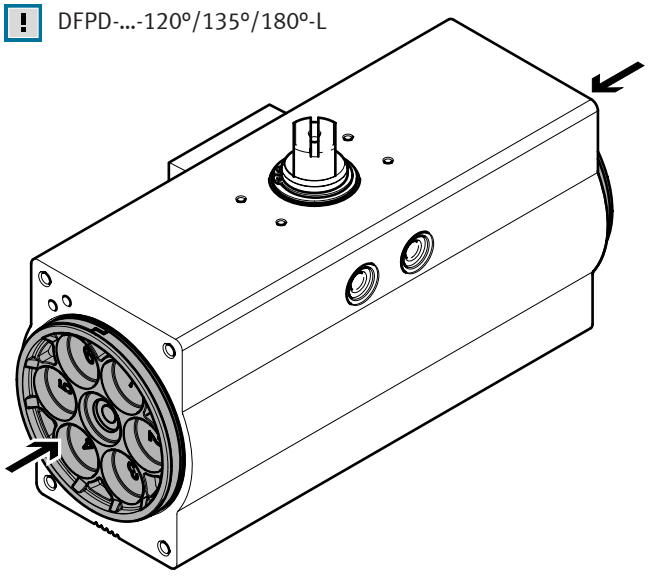

18a

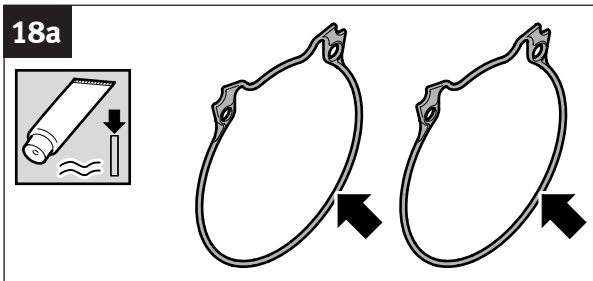

18b DFPD-700/900/1200/2300

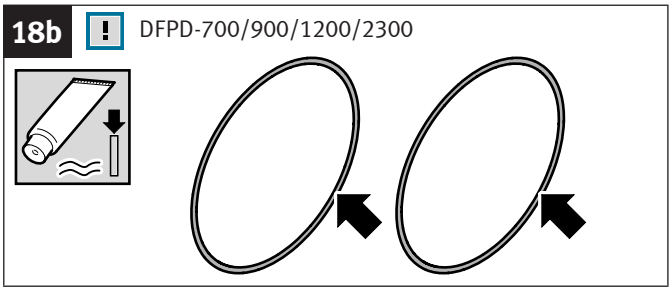

19a DFPD-...-S

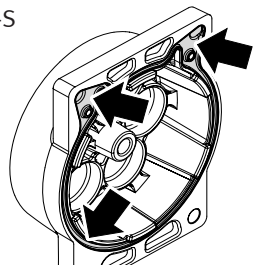

DFPD-...-D

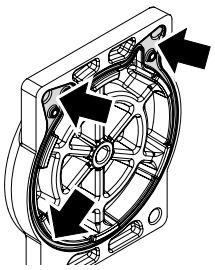

19b DFPD-700/900/1200/2300

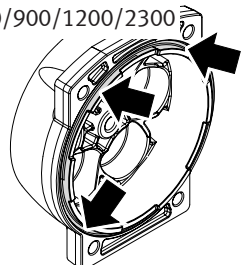

20a DFPD-...-S

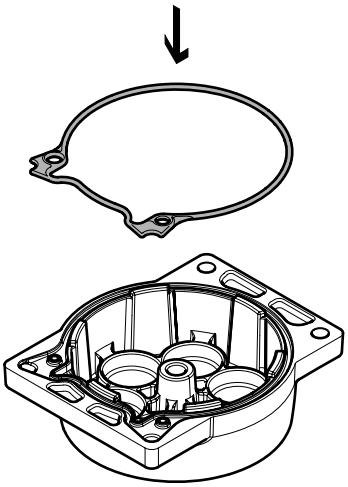

DFPD-...-D

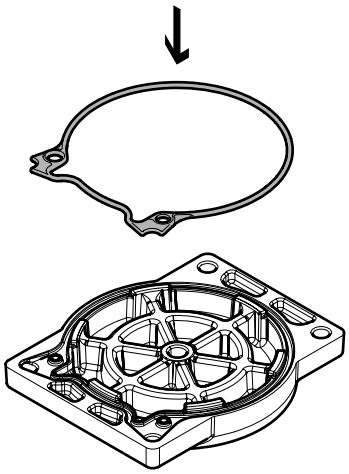

20b DFPD-700/900/1200/2300...-D+S

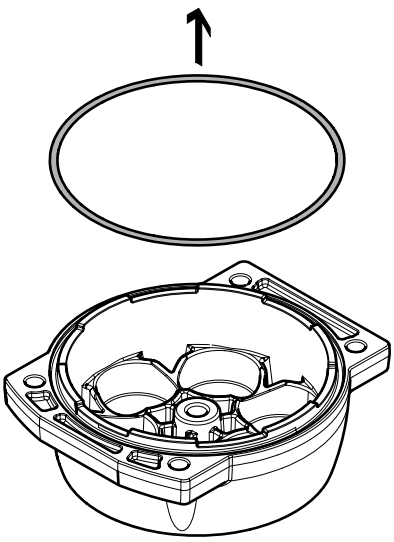

21a DFPD-...-S

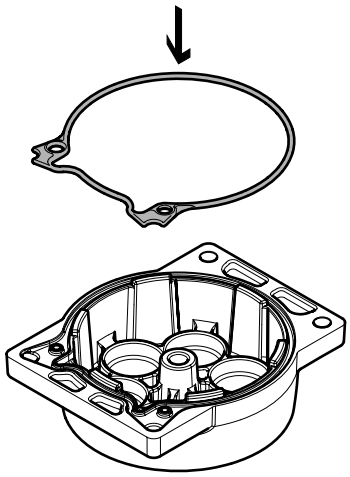

DFPD-...-D

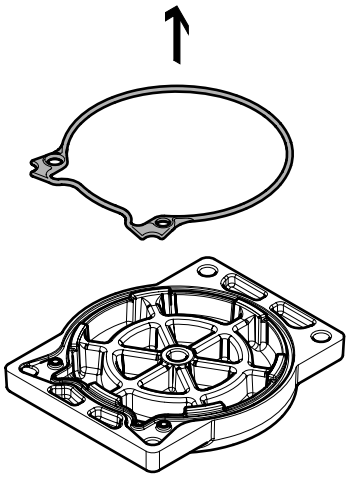

21b DFPD-700/900/1200/2300...-D+S

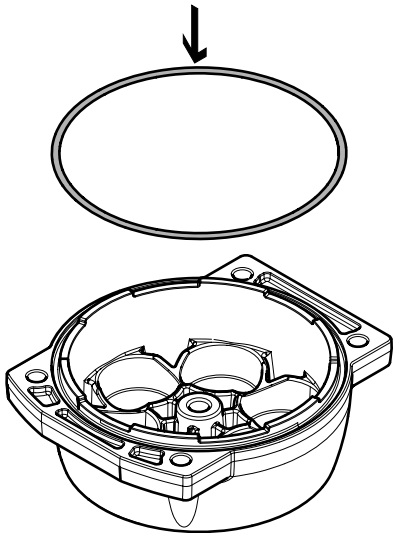

i

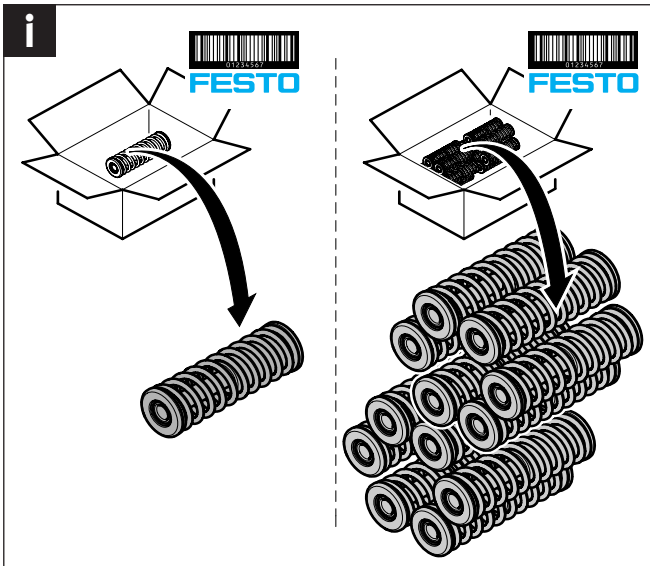

i

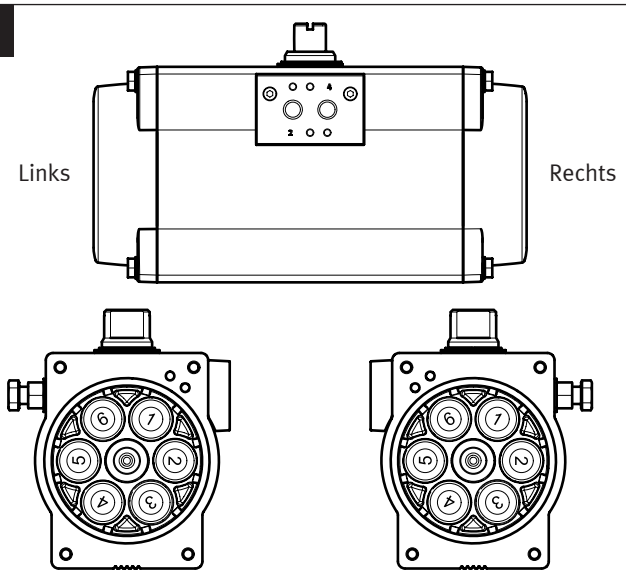

Type code	Positioning springs		Number of springs
	Left	Right	
20	2-5	2-5	4
25	2-5	2-4-6	5
30	2-4-6	2-4-6	6
35	2-4-6	1-3-4-6	7
40	1-3-4-6	1-3-4-6	8
45	1-3-4-6	1-3-4-5-6	9
50	1-3-4-5-6	1-3-4-5-6	10
55	1-3-4-5-6	1-2-3-4-5-6	11
60	1-2-3-4-5-6	1-2-3-4-5-6	12

22a

DFPD-...-S

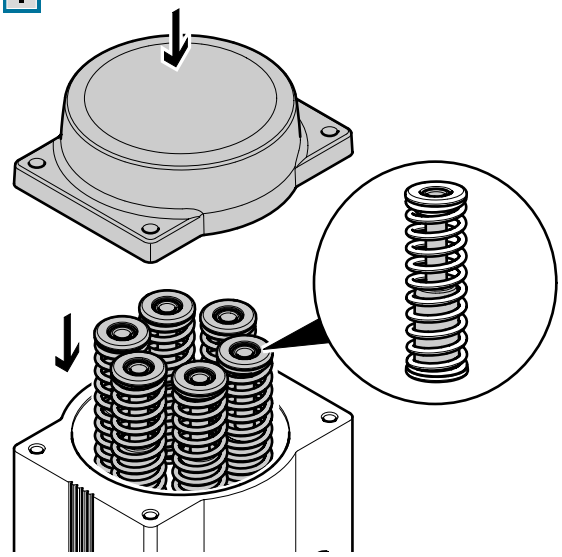

DFPD-...-D

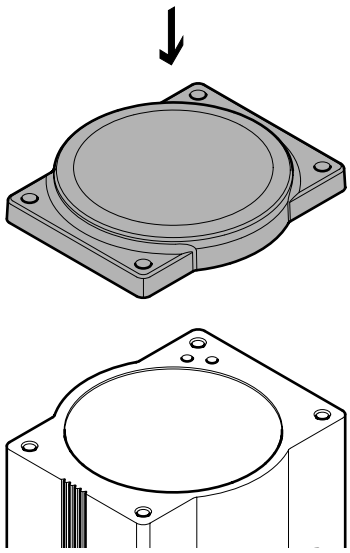

22b

DFPD-700/900/1200/2300...-S

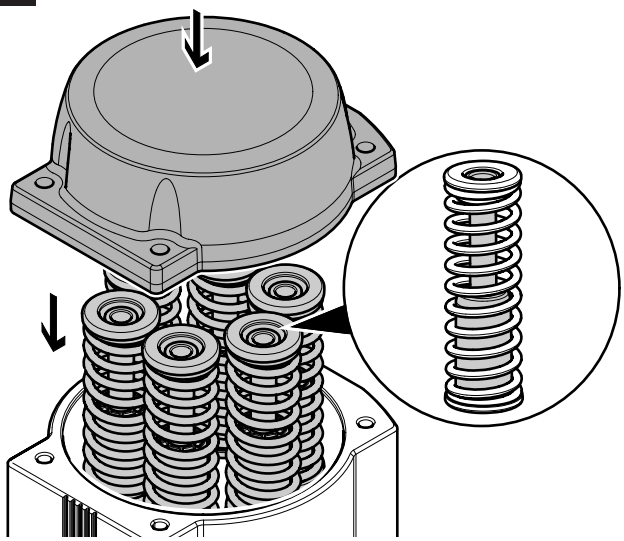

DFPD-700/900/1200/2300...-D

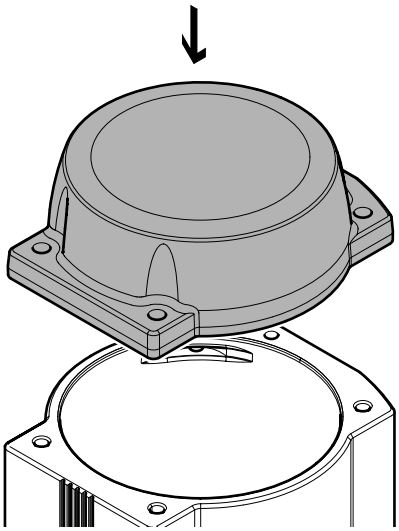

23a

DFPD-...-S

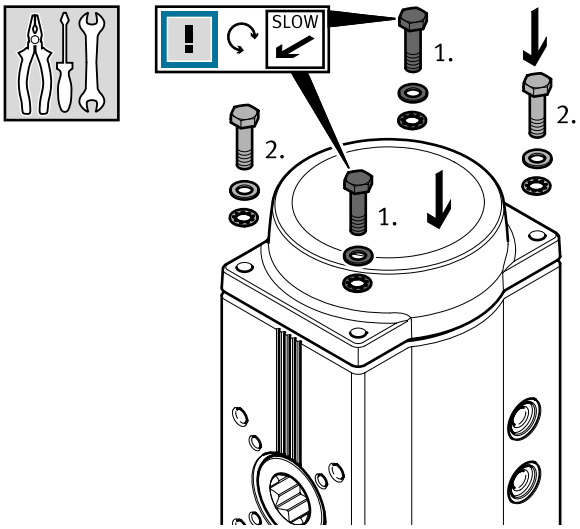

DFPD-...-D

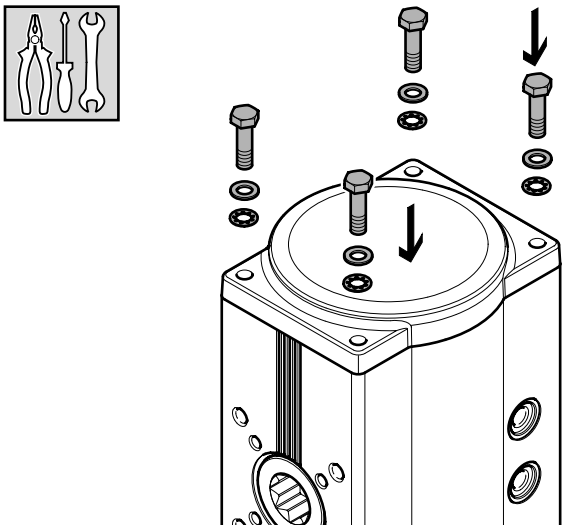

23b

DFPD-700/900/1200/2300...-S

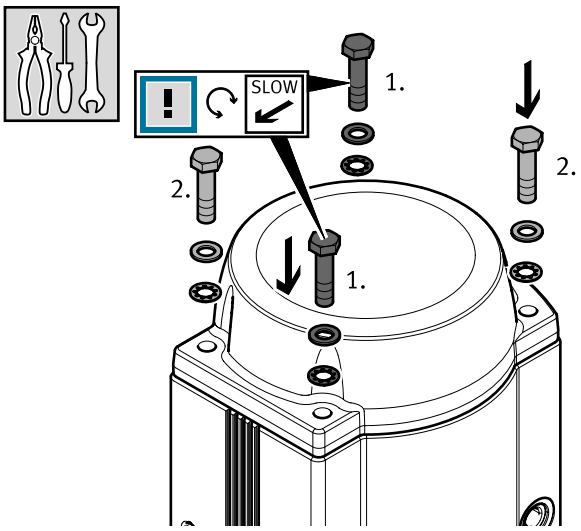

DFPD-700/900/1200/2300...-D

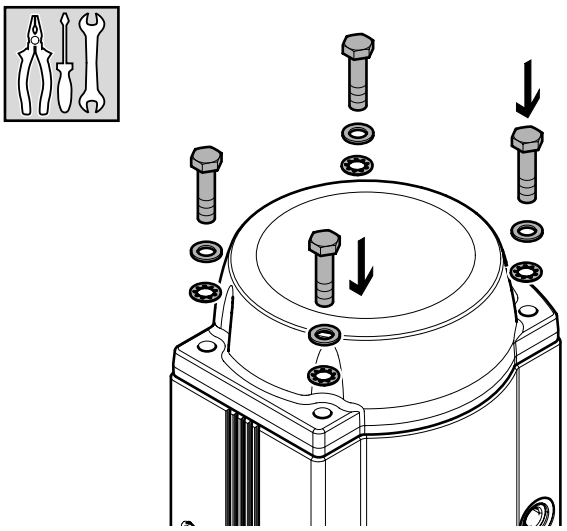

i

	Nm
DFPD-10	3–4 Nm
DFPD-20	3–4 Nm
DFPD-40	10–11 Nm
DFPD-80	10–11 Nm
DFPD-120	22–25 Nm
DFPD-160	22–25 Nm
DFPD-240	22–25 Nm
DFPD-300	38–43 Nm
DFPD-480	38–43 Nm
DFPD-700	38–43 Nm
DFPD-900	60–70 Nm
DFPD-1200	70–80 Nm
DFPD-2300	115–125 Nm

24

DFPD-...

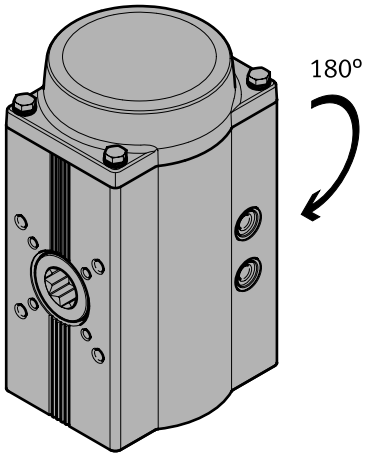

DFPD-700/900/1200/2300...

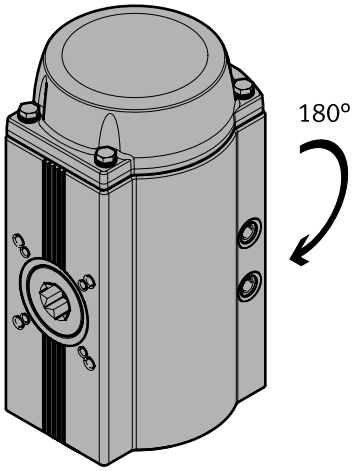

25a DFPD-...-S

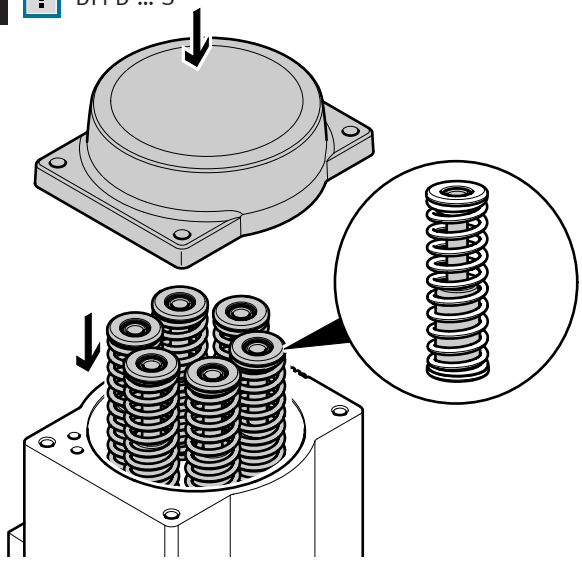

DFPD-...-D

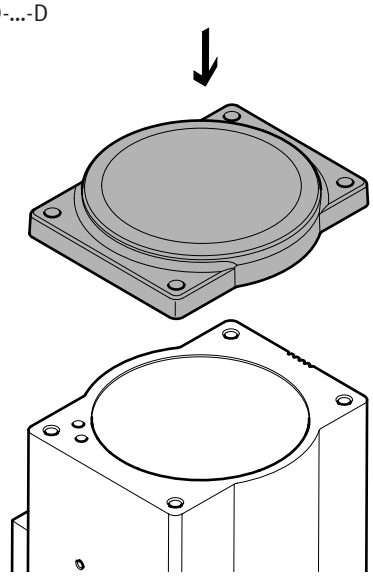

25b DFPD-700/900/1200/2300...-S

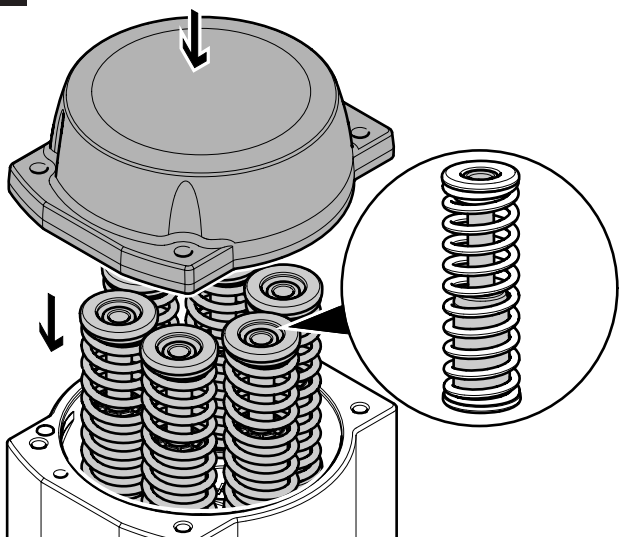

DFPD-700/900/1200/2300...-D

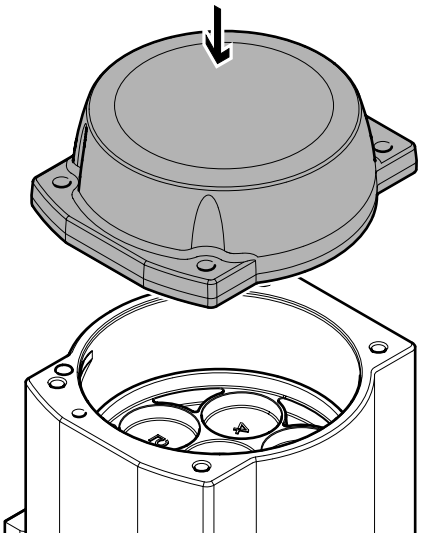

26a DFPD-...-S

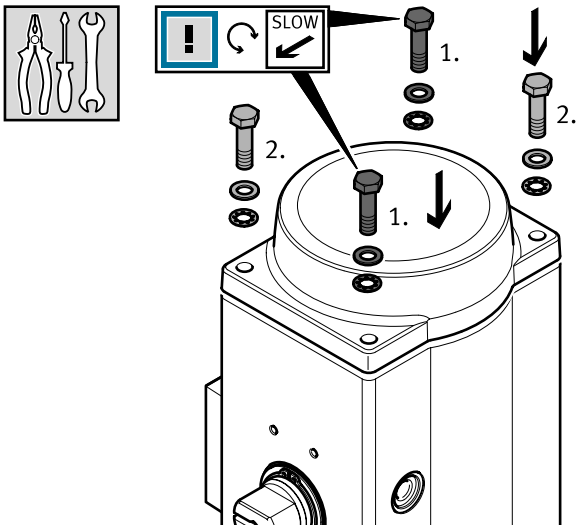

DFPD-...-D

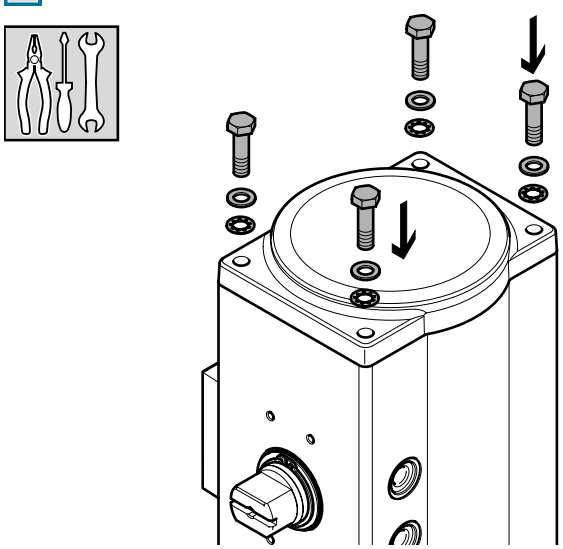

26b DFPD-700/900/1200/2300...-S

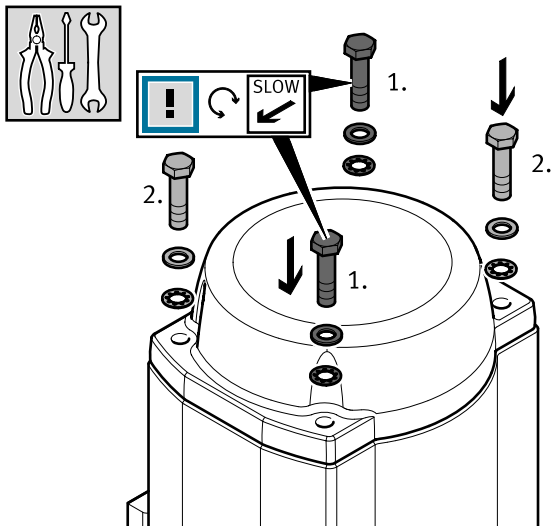

DFPD-700/900/1200/2300...-D

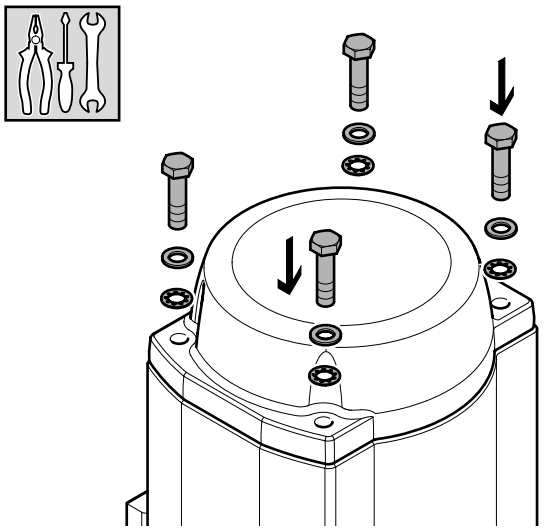

i

	Nm
DFPD-10	3–4 Nm
DFPD-20	3–4 Nm
DFPD-40	10–11 Nm
DFPD-80	10–11 Nm
DFPD-120	22–25 Nm
DFPD-160	22–25 Nm
DFPD-240	22–25 Nm
DFPD-300	38–43 Nm
DFPD-480	38–43 Nm
DFPD-700	38–43 Nm
DFPD-900	60–70 Nm
DFPD-1200	70–80 Nm
DFPD-2300	115–125 Nm

27

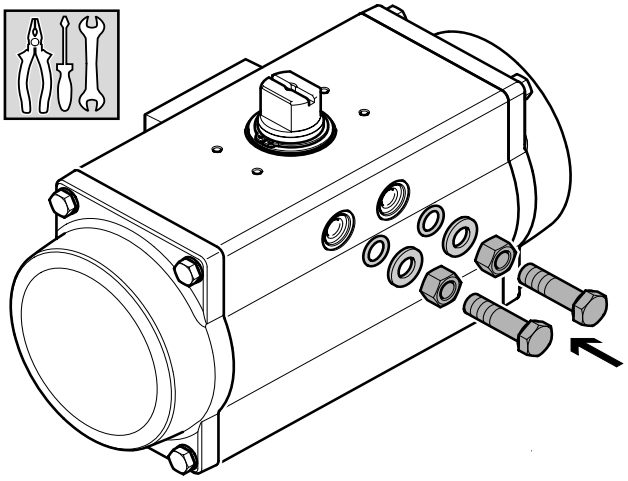

	Nm
DFPD-10	10–11 Nm
DFPD-20	10–11 Nm
DFPD-40	10–11 Nm
DFPD-80	22–25 Nm
DFPD-120	22–25 Nm
DFPD-160	38–43 Nm
DFPD-240	65–70 Nm
DFPD-300	65–70 Nm
DFPD-480	85–90 Nm
DFPD-700	85–90 Nm
DFPD-900	175–180 Nm
DFPD-1200	175–180 Nm
DFPD-2300	345–355 Nm

5 Start-up

1

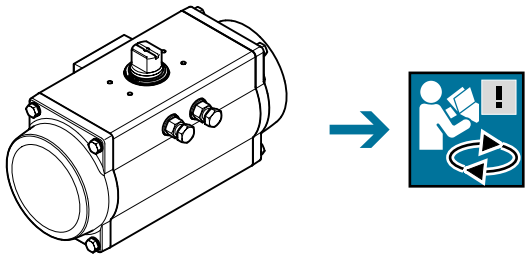

Sensor boxes SRBC

FESTO

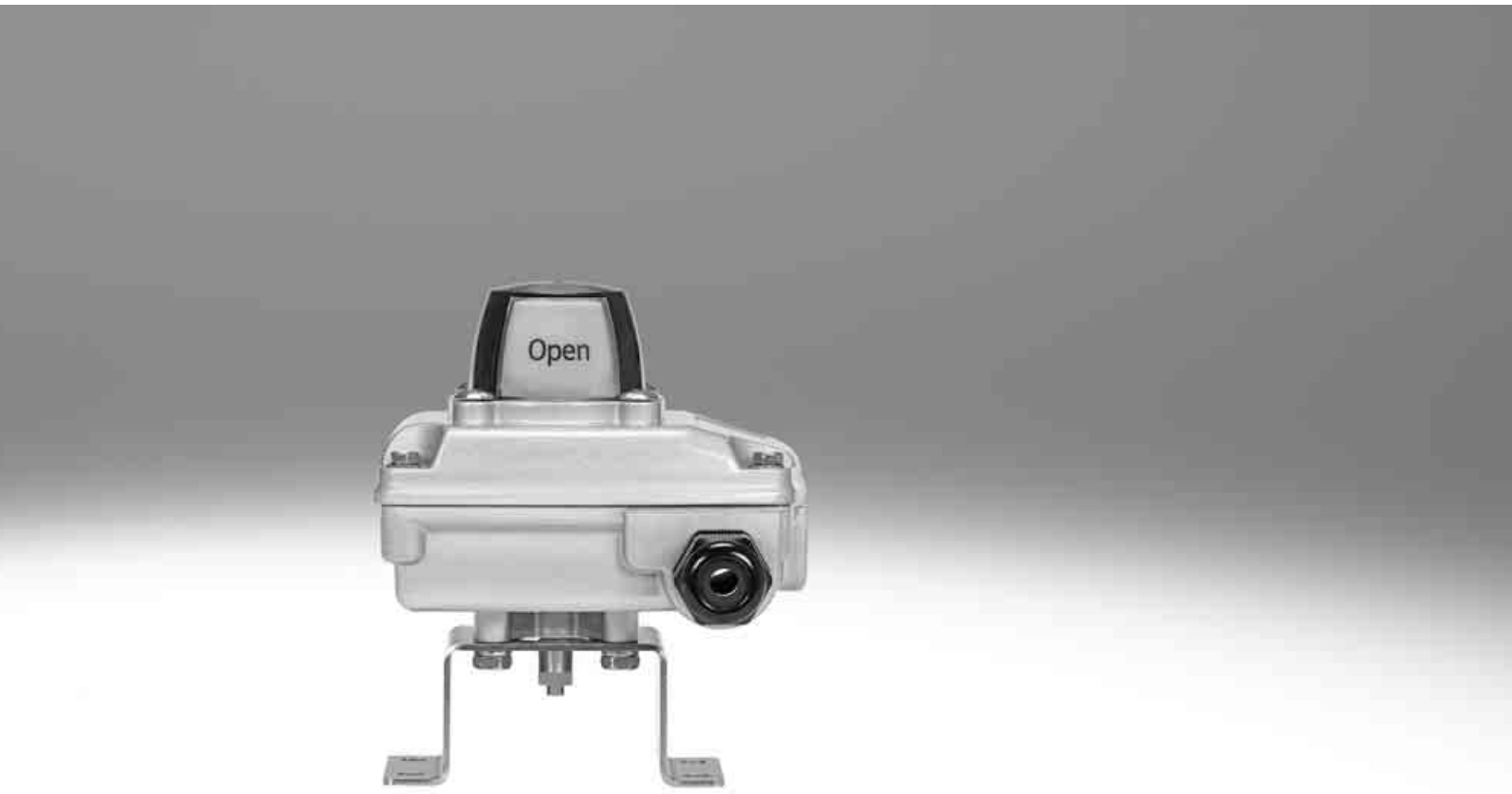

New

Sensor boxes SRBC

Key features and product range overview

FESTO

Function

Sensor boxes SRBC are used for electrical feedback and control of the position of process valves actuated using pneumatic quarter turn actuators. They can be mounted quickly and easily on quarter turn actuators with a hole pattern to VDI/VDE 3845 using mounting adapters. The sturdy design of the sensor box SRBC is ideal for the harsh conditions in process automation.

Innovative

- Pre-assembled mounting adapter for ease of installation
- The trip cams can be set easily without additional tools
- Sturdy, corrosion-resistant design, ideal for use in harsh operating conditions
- Clearly visible 3D position indicator allows rapid detection of the current position of the quarter turn actuator

Flexible

- Weather-tight housing for outdoor applications too
- Mechanical, inductive or magnetic switch variants for virtually all ranges of application
- Intrinsically safe variants for use in potentially explosive areas
- Two cable inputs for common power supply for the sensor box and solenoid valve as standard

Design

- Sturdy aluminium housing with two cable inputs M20x1.5
- Captive stainless steel screws on the housing cover
- Pre-assembled stainless steel mounting adapter 80x30 H20 for ease of mounting on standard drives as per VDI/VDE 3845
- Cable connector and blanking plug included in the scope of delivery
- 3D OPEN/CLOSED position indicator
- Mechanical, inductive or magnetic switch variants
- Number of switches: 2
- IP67, NEMA 4/4x
- cCSAus Listed, General Purpose
- ATEX ia version
- SIL 2 to IEC 61508

SIL certified according IEC 61508

Product range overview

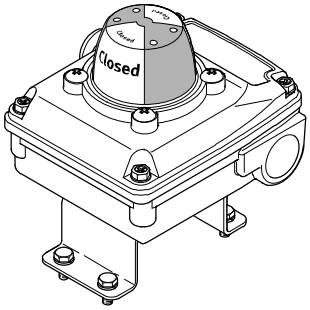

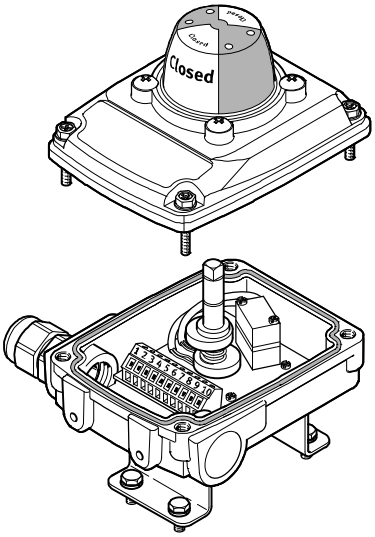

Measuring principle	Type	Operating voltage range	Switching output	Switching element function
Electromechanical	SRBC-...-MW-22A-1W-	0...250 V AC 0...30 V DC	Contacting	Toggle switch, single-pole (SPDT)
Magnetic reed	SRBC-...-R-2A-1W-	0...120 V AC 0...175 V DC	Contacting	Toggle switch, single-pole (SPDT)
Inductive	SRBC-...-N-20N-ZC-	8.2 V DC	NAMUR	N/C contact
Inductive	SRBC-...-N-20N-ZC-...-EX4	8.2 V DC	NAMUR	N/C contact
Inductive	SRBC-...-N-1-P-	10...30 V DC	PNP	N/O contact
Inductive	SRBC-...-N-1-N-	10...30 V DC	NPN	N/O contact
Inductive	SRBC-...-N-1-ZU-	5...60 V DC	Contactless, 2-wire	N/O contact

Sensor boxes SRBC

Type codes SRBC

FESTO

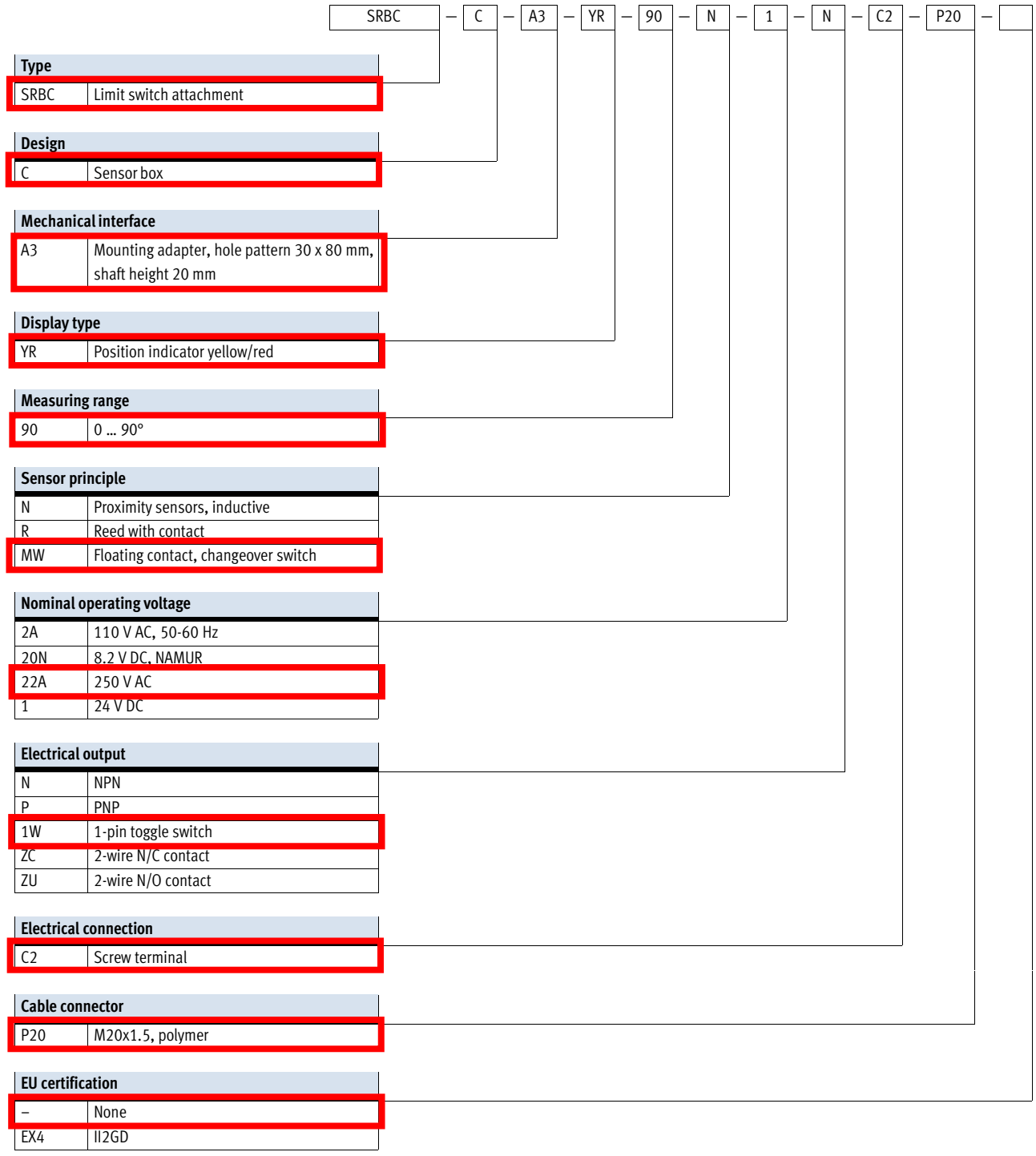

Type	
SRBC	Limit switch attachment

Design	
C	Sensor box

Mechanical interface	
A3	Mounting adapter, hole pattern 30 x 80 mm, shaft height 20 mm

Display type	
YR	Position indicator yellow/red

Measuring range	
90	0 ... 90°

Sensor principle	
N	Proximity sensors, inductive
R	Reed with contact
MW	Floating contact, changeover switch

Nominal operating voltage	
2A	110 V AC, 50-60 Hz
20N	8.2 V DC, NAMUR
22A	250 V AC
1	24 V DC

Electrical output	
N	NPN
P	PNP
1W	1-pin toggle switch
ZC	2-wire N/C contact
ZU	2-wire N/O contact

Electrical connection	
C2	Screw terminal

Cable connector	
P20	M20x1.5, polymer

EU certification	
–	None
EX4	II2GD

New

Sensor boxes SRBC, electromechanical and magnetic reed

Technical data

- Measuring principle: electromagnetic or magnetic reed
- Switching element function: toggle switch, single-pole (SPDT)
- For DC and AC voltage
- Pre-assembled mounting adapter 80 x 30 H20
- Cable connector and blanking plug included in the scope of delivery

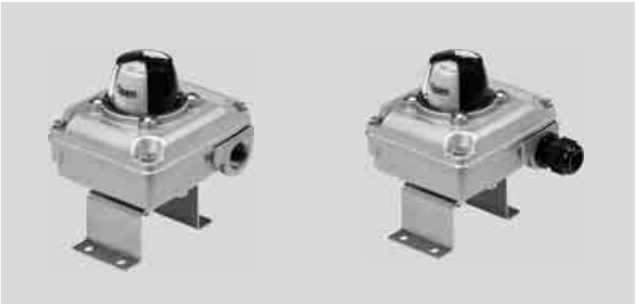

General technical data			
Type SRBC-...		-MW	-R
Setting range for angle detection	[°]	0 ... 90	
Based on standard		ISO 5211	
		VDI/VDE 3845	
		–	EN 60947-5-2
Type of mounting		On flange to ISO 5211	
		With mounting bracket	

Electrical characteristic data			
Type SRBC-...		-MW	-R
Measuring principle		Mechanical/electrical	Magnetic reed
Switching output		Contacting	
Switching element function		Toggle switch, single-pole	
Operating voltage range Alternating current AC	[V]	0 ... 250	0 ... 120
Max. output current AC	[mA]	3000 (at 250 V)	250 (at 120 V)
Operating voltage range Direct current DC	[V]	0 ... 30	0 ... 175
Max. output current DC	[mA]	3000 (at 30 V)	250 (at 175 V)

Electromechanical components			
Type SRBC-...		-MW	-R
Cable connector		M20x1.5	
Permissible cable diameter	[mm]	5 ... 13	
Electrical connection		10-pin	
		Screw terminal	
Nominal conductor cross section that can be connected	[mm^2]	0.25 ... 2.5	
Information on materials, cable connection		PA	
Information on materials, blanking plug		PA	

Sensor boxes SRBC, electromechanical and magnetic reed

Technical data

Operating and environmental conditions		
Ambient temperature	[°C]	–20 … +80
Storage temperature	[°C]	–20 … +80
Degree of protection		IP67
		NEMA 4/4X
Shock resistance		Shock test with severity level 2 to FN 942017-5 and EN 60068-2-27
Vibration resistance		Transport application test with severity level 2 to FN 942017-4 and EN 60068-2-6
CE marking (see declaration of conformity)[1)]		To EU Low Voltage Directive
Approval certificate		c CSA us (OL)
Safety integrity level (SIL)		SIL 2

1) Additional information www.festo.com/sp ➔ Certificates.

Materials	
Housing	Die-cast aluminium
Shaft	High-alloy stainless steel
Screws	High-alloy stainless steel
Seals	NBR
Pointer	PC
Note on materials	RoHS compliant
	Contains paint-wetting impairment substances

Sensor boxes SRBC, electromechanical and magnetic reed

Technical data

Dimensions Download CAD data ➔ **www.festo.com**

SRBC

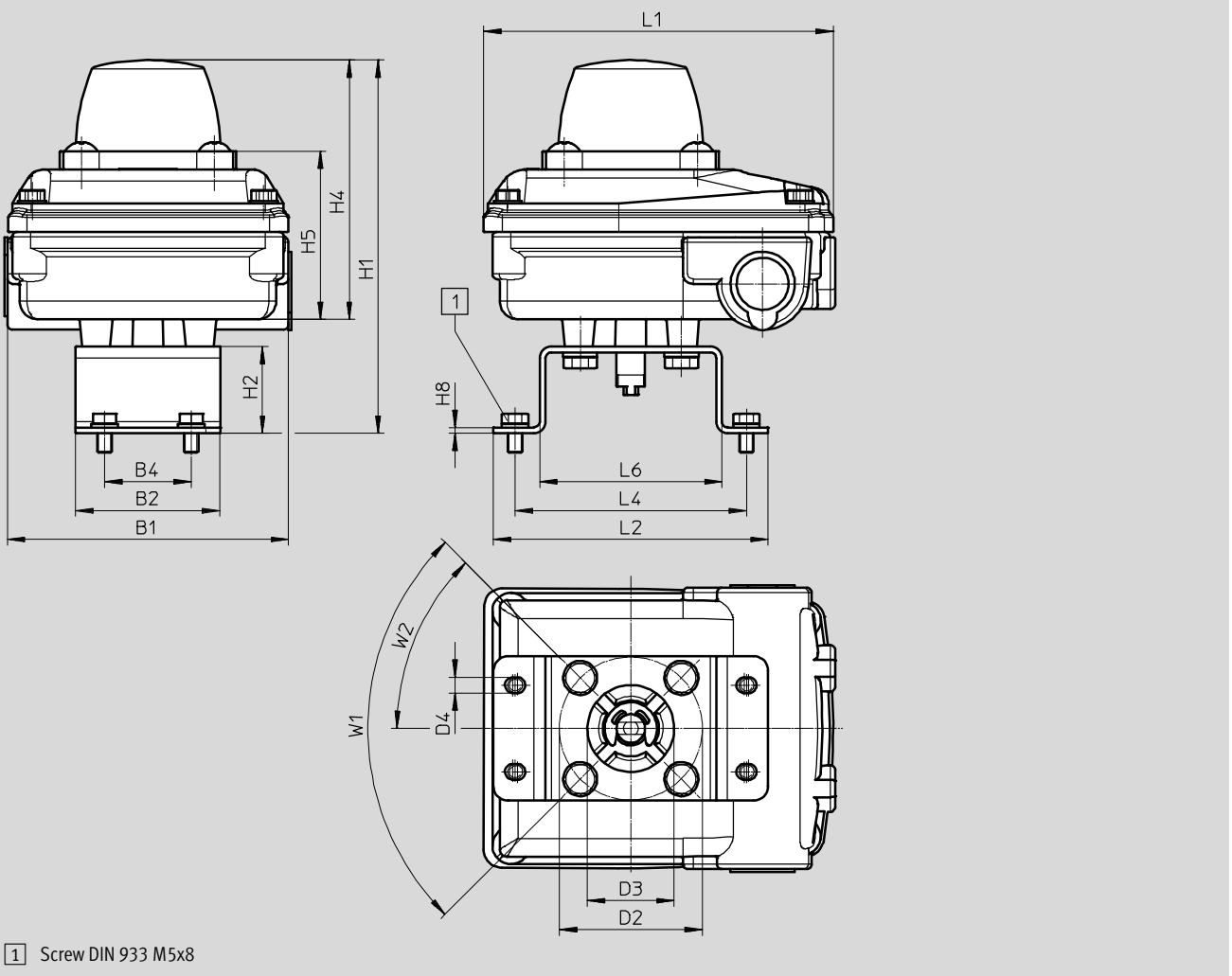

1 Screw DIN 933 M5x8

Type	B1	B2	B4	D2 ∅	D3 ∅	D4 ∅	H1	H2	H4
With DARQ-K-X1-A1-F05-20-R1	98	50	30	50	30	5.5	129	30	90
With DARQ-K-X1-A1-F05-30-R1							139	40	

Type	H5	H8	L1	L2	L4	L6	W1	W2
With DARQ-K-X1-A1-F05-20-R1	58.2	2	120	95	80	63	90°	45°
With DARQ-K-X1-A1-F05-30-R1								

Description :
CHANNEL WASH WATER VALVE
C.F.F. STAINLESS STEELS
DFPD-20-RP-90-RS30-F04
Ø1", NPT

Trade Name :
Festo

Model no :
13117333

ITEM NO.	PartNo	DESCRIPTION	QTY.
1	13055447	VAPB-1"-3PC-2WAY-NPT - Ball valve	1
2	8047621	DFPD-20-RP-90-RS30-F04 - Single Acting Quarter Turn Actuator	1
3	151165	GRLA-1/8-B - One-way Flow control valve	1
4	533216	QB-1/8-1/4-U-M - Push-in Fitting	1
5	1205860	AMTE-M-LH-G18 - Silencer	1
6	13063293	HSSS - M5X30	4
7	13063297	FLAT WASHER - M5	4
8	13063299	LOCK WASHER - M5	4
9	13063295	HEX NUT - M5	4

REV.	DESCRIPTION	DATE

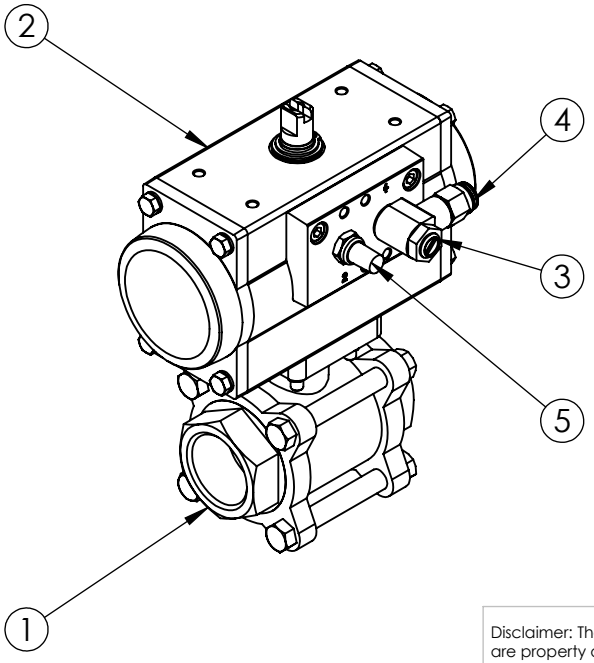

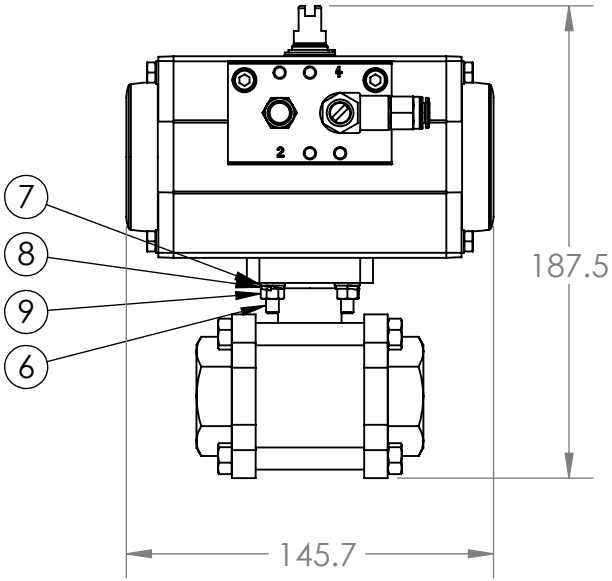

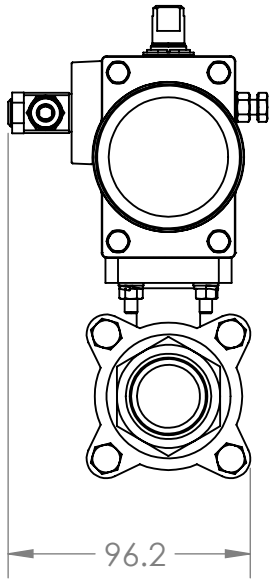

Disclaimer: The designs, information and data contained herein are property of Festo Inc. The information here in shall not be disclosed, used or duplicated in whole or in part for any purposes whatsoever without prior written consent of Festo Inc. Receipt of this document shall be deemed to be in acceptance of the conditions specified herein. Unauthorized copies of this document should be reported to and returned to Festo Inc.

	NAME	DATE
DRAWN	YUN	2016-10-03
ENG APPR.	MZA	2016-10-03

MATERIAL

FINISH

DO NOT SCALE DRAWING

UNLESS OTHERWISE SPECIFIED:

DIMENSIONS ARE IN MILLIMETERS

TOLERANCES:
x = ±1
x.x = ±0.1
x.xx = ±0.01
ANGLES = ±1°

FESTO
5300 Explorer Drive, Mississauga ON L4W 5G4
TEL: (905) 624-9000 FAX: (905) 624-9001

FILE NAME: VABP-1-DFPD-20-CS (13117333, FOURNIER)

TITLE:
VABP-1-DFPD-20-CS (13117333, FOURNIER)

DWG. NO. 13117333

REV

SCALE: 1:3

SHEET 1 OF 1

5 4 3 2 1

C.F.F. Stainless Steels Inc.

Your North American Stainless Steel Partner

SS-3DM 316 BALL VALVE

- Three Piece Body
- Full Port
- Screwed Socket-Weld or Butt-Weld Ends
- Blowout Proof Stem
- ISO 5211 Direct Mounting Pad
- Anti-Static Device
- Threads to ANSI B1.20.1 (NPT)

DIMENSIONS

	NPS	d	L	ISO 5211	A	B	S	h1	d1	d2	d3	d4	R1	R2	Torque in-lb Action	Torque in-lb Breakaway	Weight LB
1000 WOG	¼	0.31	2.17	F03/F04	1.65	0.24	0.35	0.31	0.55	1.22	1.42	1.65	0.11	0.11	30	45	1.2
	⅜	0.39	2.36						0.69								
	½	0.59	2.95						0.87								
	¾	0.79	3.15					0.35	1.07						55	70	1.7
	1	0.98	3.54	F04/F05	1.97	0.3	0.43	0.39	1.36	1.4	1.65	1.97	0.11	0.14	65	80	2.3
	1¼	1.26	4.32					0.43	1.70						95	120	4
	1½	1.5	4.7	F05/F07	2.76	0.33	0.55	0.55	1.92	2.2	1.97	2.76	0.14	0.18	100	180	5.4
	2	1.97	5.51						2.41						140	250	8.6

Design and materials are subject to change without notice.

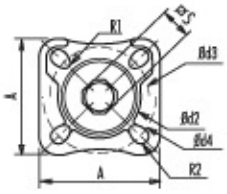

NAME/MATERIAL		Stainless Steel
1	Body	ASTM A351 CF8M/1.4408
2	Cap	
3	Ball	ASTM A351-CF8M/1.4408
4	Stem	ASTM A276-316
5	Ball Seat	PTFE/RTFE/CTFE
6	Gasket	
7	Thrust Washer	PTFE
8	Packing	
9	O Ring	VITON
10	Belleville Washer	50CrV4
11	Stopper (Lock Pad)	
12	Gland Ring	
13	Lock Device	AISI 304
14	Bolt	
15	Nut	
16	Spring Washer	

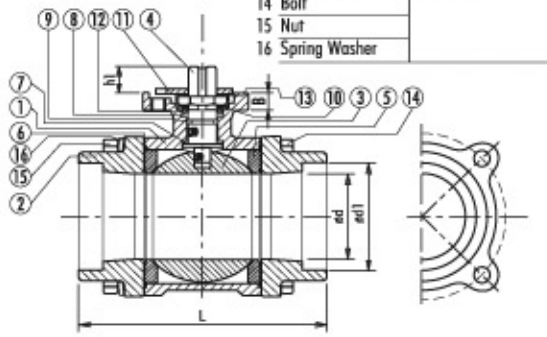

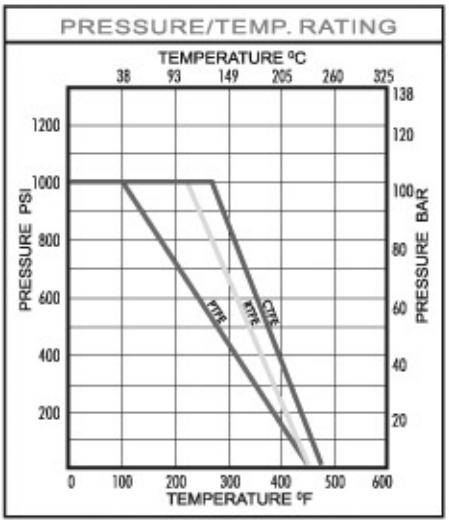

Hamilton, Ontario
1840 Burlington St. E.
Hamilton, ON L8H 3L4
Telephone: 905-549-2603
Toll Free: 1-800-263-4511
Fax: 905-549-2994

Kingston, Ontario
11 Harvey St.
Kingston, ON K7K 5C1
Telephone: 613-549-4442
Toll Free: 866-549-4442
Fax: 613-549-4462

Montreal, Quebec
4900 Chemin du Bois Franc
St. Laurent, Quebec
H4S 1A7
Telephone: 514-337-7700
Toll Free: 1-800-361-3379
Fax: 514-337-1595

Quarter turn actuators DFPD

FESTO

New

Quarter turn actuators DFPD

Key features

Function

The DFPD series features a rack and pinion combination with a constant torque characteristic across the entire swivel range. The torque range is from 10 to 480 Nm. Quarter turn actuators DFPD are suitable for automating butterfly valves, ball valves and air dampers. They are also suitable for water/wastewater, beverage, pharmaceutical and process automation. The modular and compact design of the DFPD allows various spring configurations as a suitable solution for different applications.

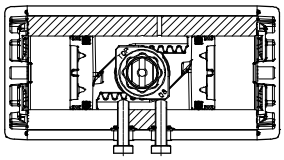

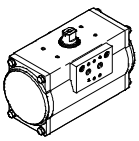

DFPD-...-D
double-acting

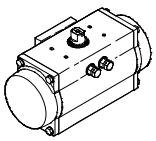

DFPD-...-S
single-acting

Types of connection

- Port pattern to NAMUR VDI/VDE 3845 for mounting solenoid valves, position sensors and positioners
- Standard connection to the process valve to ISO 5211

Variants

High temperature
DFPD-...-T4

- Seals made of FKM and plain bearings made of PPS
- For applications up to +150 °C
- II 2G c T3 X
  II 2D c 175°C X
  0°C <= Ta <= +150°C

Low temperature
DFPD-...-T6

- Seals made of FVMQ for applications down to –50 °C
- II 2G c T6 X
  II 2D c 85°C X
  –50°C <= Ta <= +60°C

Closes to the left and right
DFPD-...-R/L

- The modular system offers the option of closing to the left. This is done by turning the pistons

Spring configuration
DFPD-...-S

- The spring index can be adapted to the system's supply pressure in increments of 0.5 bar through free selection of the number of spring cartridges (4 to 12)

Epoxy coating
DFPD-...-EP

- Drive with epoxy coating

Stainless steel shaft
DFPD-...-R3

- With stainless steel shaft

NPT version
DFPD-...-N

- Pneumatic connections with NPT threads

180° version
DFPD-...-180

- Sizes 40, 120, 240, 480 double-acting also available with 180° swivel angle

Size	Flange pattern	Shaft connection	Shaft connection depth [mm]	Pneumatic connection
10	F03	V9	10.7	G1/8
	F04			NPT1/8
20	F04	V11	13.2	G1/8
	F05			NPT1/8
40	F05, F07	V14	16.5	G1/8
				NPT1/8
80	F05, F07	V17	19.3	G1/8
				NPT1/8
120	F05, F07	V17	19.3	G1/4
				NPT1/4
160	F07, F10	V22	24.3	G1/4
				NPT1/4
240	F07, F10	V22	24.3	G1/4
				NPT1/4
300	F07, F10	V22	24.3	G1/4
				NPT1/4
480	F10, F12	V27	29.5	G1/4
				NPT1/4

Quarter turn actuators DFPD

Type codes

DFPD – [ ] – [ ] – 20 – RP – [ ] – 90 – R – S – 30

Type	
DFPD	Quarter turn actuator

System of units	
–	Metric
N	Imperial

Version	
–	Standard

Torque	
10	10 Nm
20	20 Nm
40	40 Nm
80	80 Nm
120	120 Nm
160	160 Nm
240	240 Nm
300	300 Nm
480	480 Nm

Design	
RP	Rack and pinion

Yoke type	
–	None

Swivel angle	
90	90°
180	180°

Swivel direction	
L	To the left
R	To the right

Function	
D	Double-acting
S	Single-acting

Spring configuration	
–	None
20	For connection pressure 2 bar
25	For connection pressure 2.5 bar
30	For connection pressure 3 bar
35	For connection pressure 3.5 bar
40	For connection pressure 4 bar
45	For connection pressure 4.5 bar
50	For connection pressure 5 bar
55	For connection pressure 5.5 bar
60	For connection pressure 6 bar

Quarter turn actuators DFPD

Type codes

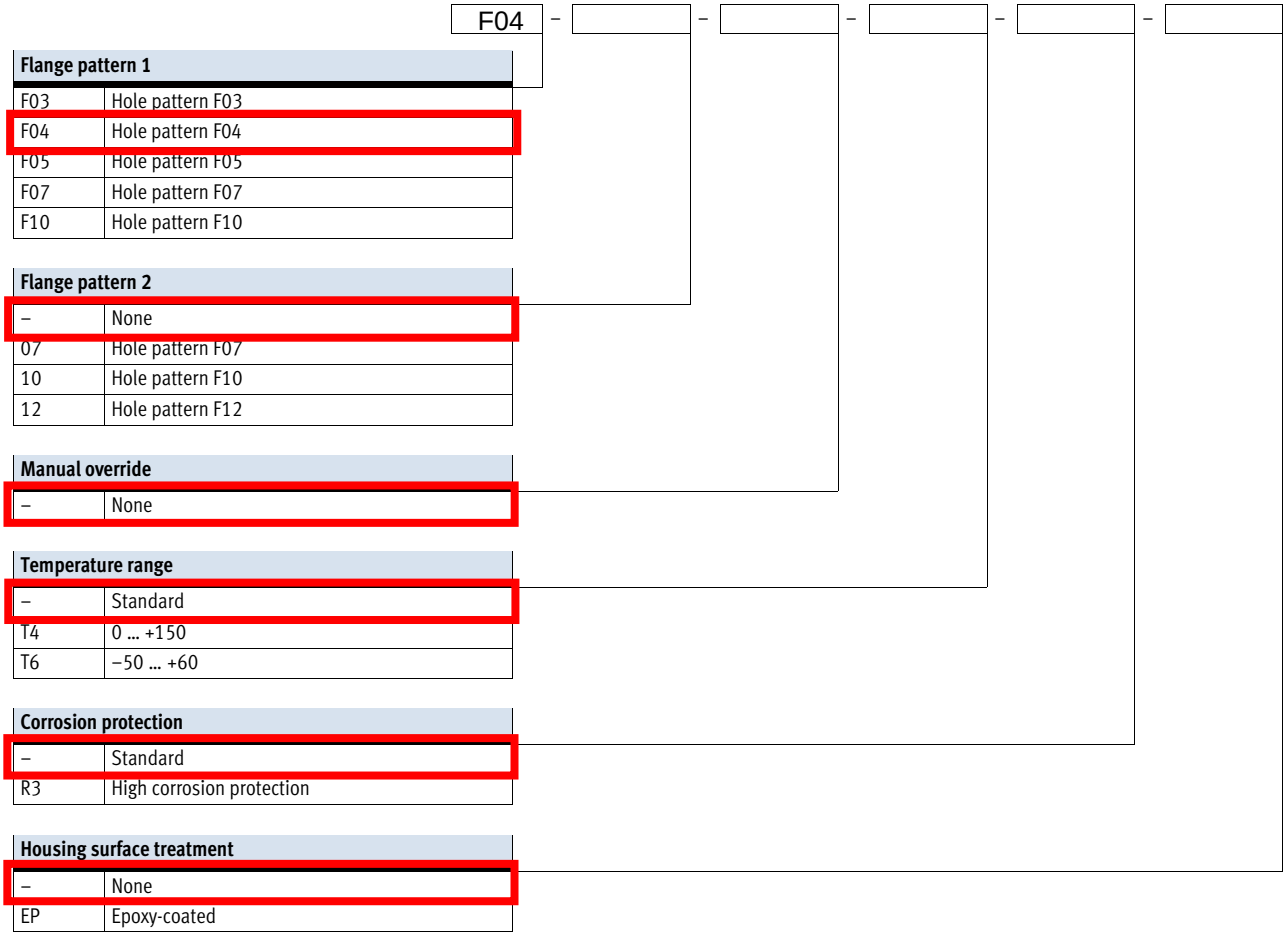

Flange pattern 1	
F03	Hole pattern F03
F04	Hole pattern F04
F05	Hole pattern F05
F07	Hole pattern F07
F10	Hole pattern F10

Flange pattern 2	
–	None
07	Hole pattern F07
10	Hole pattern F10
12	Hole pattern F12

Manual override	
–	None

Temperature range	
–	Standard
T4	0 … +150
T6	–50 … +60

Corrosion protection	
–	Standard
R3	High corrosion protection

Housing surface treatment	
–	None
EP	Epoxy-coated

Quarter turn actuators DFPD, single-acting

Technical data

FESTO

Function

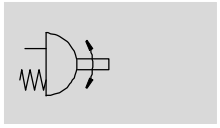

Swivel angel
0 ... 90°

Size
20 ... 480

Torque
7 ... 156 Nm

General technical data									
Size	20		40	80	120	160	240	300	480
Mode of operation	Single-acting								
Design	Rack and pinion								
Cushioning	No cushioning								
Mounting position	Any								
Pneumatic connection	G1/8				G1/4				
	NPT1/8				NPT1/4				
Connection to process valve as per standard	ISO 5211								
Valve connection conforms to standard	VDI/VDE 3845 (NAMUR)								
Connection for positioner and position sensor conforms to standard	VDI/VDE 3845 (NAMUR)								
Flange hole pattern	F04	F05	F05, F07			F07, F10			F10, F12
Swivel angle [°]	90								
End-position adjusting range at 0° [°]	−5 ... +5								
End-position adjusting range at 90° [°]	−5 ... +5								
Position sensing	Visual								
Closing direction	Closes to the right								

Quarter turn actuators DFPD, single-acting

Technical data

Operating and environmental conditions			
Variant		RS30	RS60
Operating pressure	[bar]	2 ... 8	
Nominal operating pressure	[bar]	3	6
Operating medium		Compressed air to ISO 8573-1:2010 [7:4:4]	
Note on operating/pilot medium		Pressure dew point 10°C below ambient temperature/temperature of medium	
		Lubricated operation possible (in which case lubricated operation will always be required)	
Ambient temperature	[°C]	–20 ... +80	
CE marking (see declaration of conformity) ➔ www.festo.com		To EC Machinery Directive	
		To EU Explosion Protection Directive (ATEX)	
ATEX category for gas		II 2G	
Explosion ignition protection type for gas		c T4 X	
ATEX category for dust		II 2D	
Explosion ignition protection type for dust		c 105°C X	
Explosion-proof temperature rating	[°C]	–20 <= Ta <= +80	

Quarter turn actuators DFPD, single-acting

Technical data

FESTO

Materials

Sectional view

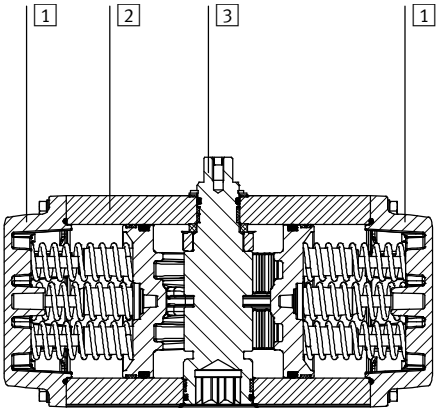

Quarter turn actuators				Basic material number
1	Cap		Coated die-cast aluminium	EN AC-46100-D
2	Housing		Anodised wrought aluminium alloy	EN AW-6063-T6
3	Shaft		Nickel-plated steel	1.0715
		R3	High-alloy stainless steel	1.4305
–	Mounting plate		Anodised wrought aluminium alloy	EN AW-6063-T6
	Piston rod		Die-cast aluminium	EN AC-46100-D
	Seals		NBR	–
	Spring		Spring steel	–
	Bearing		POM	–
	Cam		Stainless steel casting	1.4308
	Screws		High-alloy stainless steel	1.4301
	Note on materials		RoHS-compliant	–

Air consumption [l/cycle] at 6 bar

Type	
DFPD-20-RP-90-S	0.60
DFPD-40-RP-90-S	1.80
DFPD-80-RP-90-S	3.60
DFPD-120-RP-90-S	5.40

Type	
DFPD-160-RP-90-S	7.20
DFPD-240-RP-90-S	10.20
DFPD-300-RP-90-S	13.20
DFPD-480-RP-90-S	21.00

Quarter turn actuators DFPD, single-acting

Technical data

FESTO

Theoretical torque [Nm] as a function of operating pressure [bar] and swivel angle [°]													
Spring configuration	Nominal swivel angle	Spring torque	Operating pressure [bar]										
	[°]	[Nm]	2	2.5	3	3.5	4	4.5	5	5.5	6	7	8
Size DFPD-20													
20	0	2.4	**4.9**	6.7	8.6	10.4	12.2	14.0	15.9	17.7	19.5	23.2	26.8
	90	4.8	**2.5**	4.4	6.2	8.0	9.9	11.7	13.5	15.3	17.2	20.8	24.5
25	0	3.0	4.3	**6.1**	8.0	9.8	11.6	13.4	15.3	17.1	18.9	22.6	26.2
	90	6.0	1.4	**3.2**	5.0	6.8	8.7	10.5	12.3	14.2	16.0	19.6	23.3
30	0	3.6		5.5	**7.4**	9.2	11.0	12.8	14.7	16.5	18.3	22.0	25.6
	90	7.1		2.0	**3.8**	5.7	7.5	9.3	11.1	13.0	14.8	18.4	22.1
35	0	4.2			6.8	**8.6**	10.4	12.2	14.1	15.9	17.7	21.4	25.0
	90	8.3			2.6	**4.5**	6.3	8.1	9.9	11.8	13.6	17.3	20.9
40	0	4.8				8.0	**9.8**	11.6	13.5	15.3	17.1	20.8	24.4
	90	9.5				3.3	**5.1**	6.9	8.8	10.6	12.4	16.1	19.7
45	0	5.4					9.2	**11.0**	12.9	14.7	16.5	20.2	23.8
	90	10.7					3.9	**5.7**	7.6	9.4	11.2	14.9	18.5
50	0	6.0						10.4	**12.3**	14.1	15.9	19.6	23.2
	90	11.9						4.5	**6.4**	8.2	10.0	13.7	17.3
55	0	6.6							11.7	**13.5**	15.3	19.0	22.6
	90	13.1							5.2	**7.0**	8.8	12.5	16.1
60	0	7.2								12.9	**14.7**	18.4	22.0
	90	14.3								5.8	**7.6**	11.3	15.0
Size DFPD-40													
20	0	4.6	**9.3**	12.8	16.3	19.8	23.3	26.7	30.2	33.7	37.2	44.1	51.1
	90	9.1	**4.8**	8.3	11.8	15.3	18.8	22.3	25.7	29.2	32.7	39.7	46.6
25	0	5.8	8.2	**11.7**	15.1	18.6	22.1	25.6	29.1	32.6	36.0	43.0	50.0
	90	11.4	2.6	**6.1**	9.5	13.0	16.5	20.0	23.5	27.0	30.4	37.4	44.4
30	0	6.9		10.5	**14.0**	17.5	21.0	24.4	27.9	31.4	34.9	41.8	48.8
	90	13.6		3.8	**7.3**	10.8	14.2	17.7	21.2	24.7	28.2	35.1	42.1
35	0	8.1			12.8	**16.3**	19.8	23.3	26.8	30.3	33.7	40.7	47.7
	90	15.9			5.0	**8.5**	12.0	15.4	18.9	22.4	25.9	32.9	39.8
40	0	9.2				15.2	**18.7**	22.1	25.6	29.1	32.6	39.5	46.5
	90	18.2				6.2	**9.7**	13.2	16.7	20.1	23.6	30.6	37.5
45	0	10.4					17.5	**21.0**	24.5	28.0	31.4	38.4	45.4
	90	20.4					7.4	**10.9**	14.4	17.9	21.4	28.3	35.3
50	0	11.5						19.8	**23.3**	26.8	30.3	37.2	44.2
	90	22.7						8.6	**12.1**	15.6	19.1	26.0	33.0
55	0	12.7							22.2	**25.7**	29.1	36.1	43.1
	90	25.0							9.8	**13.3**	16.8	23.8	30.7
60	0	13.8								24.5	**28.0**	34.9	41.9
	90	27.2								11.1	**14.5**	21.5	28.5

Note

The operating torque of the drive must not be higher than the maximum permissible torque listed in ISO 5211, with reference to the size of the mounting flange and of the coupling.

Quarter turn actuators DFPD, single-acting

Technical data

Dimensions Download CAD data ➔ **www.festo.com**

Size 20 ... 80

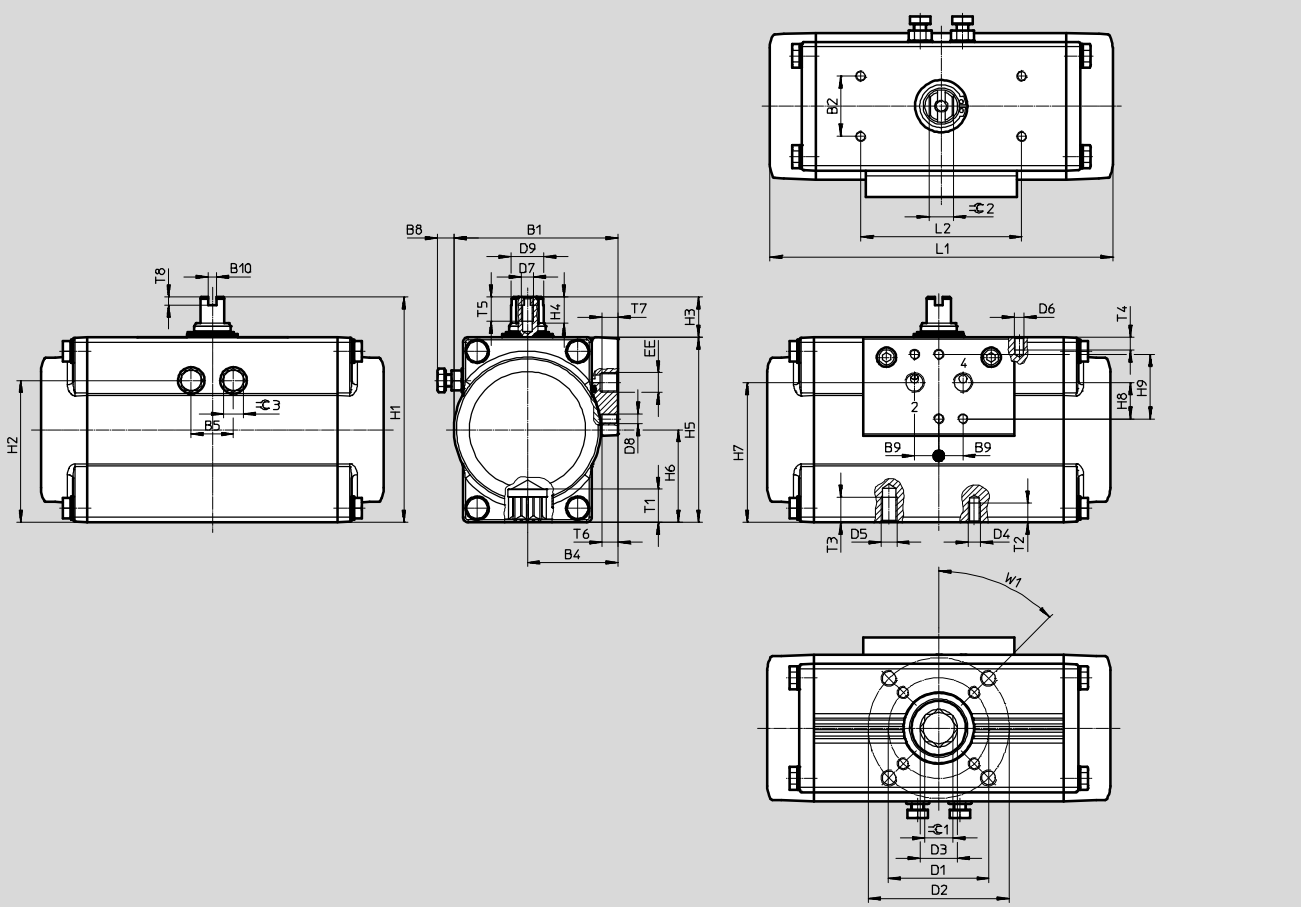

Quarter turn actuators DFPD, single-acting

Technical data

Type [mm]	B1	B2 ±0.1	B4 ±0.4	B5	B8 max.	B9	B10	D1 ∅ ±0.1	D2 ∅ ±0.1	D3 ∅	D4	D5	D6
DFPD-20-F04	68.5	30	38.5	19	9.2	12	4	42	–	14.6	M5	–	M5
DFPD-20-F05								50			M6		
DFPD-40	81.5		45	21	8.2			50	70	18.7		M8	
DFPD-40-180											M6	M8	
DFPD-80	99		53	26	9				70	23.3			

Type [mm]	D7	D8	D9 ∅ ±0.1	EE	H1	H2	H3 0.5	H4 +0.1	H5	H6 ±0.2	H7 ±0.3	H8 ±0.1	H9
DFPD-20-F04	M6	M5	12.7	G1/8 or NPT1/8	100	59.75	20	10	80	40	57.5	16	32
DFPD-20-F05													
DFPD-40			16.2		112	70.5		13	92	46	67.5		
DFPD-40-180													
DFPD-80			20.2		130	86		13	110	55	86.5		

Type [mm]	L1	L2 ±0.1	T1 ±0.4	T2	T3	T4	T5	T6	T7	T8 +0.5	⫷ 1 H11	⫷ 2 h11	⫷ 3	W1
DFPD-20-F04	145.7	80	13.2	8	–	6	12	8	8	4	11	9	10	45°
DFPD-20-F05				9										
DFPD-40	170.4		16.5	9	12						14	12	10	
DFPD-40-180	–													
DFPD-80	223.1		19.3								17	15	13	

Quarter turn actuators DFPD, single-acting

Technical data

FESTO

Ordering data				
Type	Size	Product weight [g]	Part No.	Type
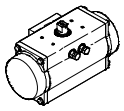	20	1371	**8047621**	**DFPD-20-RP-90-RS30-F04**
		1419	**8047622**	**DFPD-20-RP-90-RS60-F04**
		1371	**8048014**	**DFPD-20-RP-90-RS30-F05**
		1419	**8048015**	**DFPD-20-RP-90-RS60-F05**
	40	2087	**8047623**	**DFPD-40-RP-90-RS30-F0507**
		2180	**8047624**	**DFPD-40-RP-90-RS60-F0507**
	80	3746	**8047625**	**DFPD-80-RP-90-RS30-F0507**
		3960	**8047626**	**DFPD-80-RP-90-RS60-F0507**
	120	5422	**8048133**	**DFPD-120-RP-90-RS30-F0507**
		5736	**8048134**	**DFPD-120-RP-90-RS60-F0507**
	160	6767	**8048135**	**DFPD-160-RP-90-RS30-F0710**
		7179	**8048136**	**DFPD-160-RP-90-RS60-F0710**
	240	9442	**8048137**	**DFPD-240-RP-90-RS30-F0710**
		10036	**8048138**	**DFPD-240-RP-90-RS60-F0710**
	300	12052	**8048139**	**DFPD-300-RP-90-RS30-F0710**
		12880	**8048140**	**DFPD-300-RP-90-RS60-F0710**
	480	17261	**8048141**	**DFPD-480-RP-90-RS30-F1012**
		18485	**8048142**	**DFPD-480-RP-90-RS60-F1012**

Ordering data				
Type	Size	Product weight [g]	Part No.	Type
Version EP, epoxy-coated				
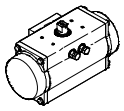	20	1371	**8047627**	**DFPD-20-RP-90-RS30-F04-R3-EP**
		1419	**8047628**	**DFPD-20-RP-90-RS60-F04-R3-EP**
		1371	**8048016**	**DFPD-20-RP-90-RS30-F05-R3-EP**
		1419	**8048017**	**DFPD-20-RP-90-RS60-F05-R3-EP**
	40	2087	**8047629**	**DFPD-40-RP-90-RS30-F0507-R3-EP**
		2180	**8047630**	**DFPD-40-RP-90-RS60-F0507-R3-EP**
	80	3746	**8047631**	**DFPD-80-RP-90-RS30-F0507-R3-EP**
		3960	**8047632**	**DFPD-80-RP-90-RS60-F0507-R3-EP**
	120	5422	**8048143**	**DFPD-120-RP-90-RS30-F0507-R3-EP**
		5736	**8048144**	**DFPD-120-RP-90-RS60-F0507-R3-EP**
	160	6767	**8048145**	**DFPD-160-RP-90-RS30-F0710-R3-EP**
		7179	**8048146**	**DFPD-160-RP-90-RS60-F0710-R3-EP**
	240	9442	**8048147**	**DFPD-240-RP-90-RS30-F0710-R3-EP**
		10036	**8048148**	**DFPD-240-RP-90-RS60-F0710-R3-EP**
	300	12052	**8048149**	**DFPD-300-RP-90-RS30-F0710-R3-EP**
		12880	**8048150**	**DFPD-300-RP-90-RS60-F0710-R3-EP**
	480	17261	**8048151**	**DFPD-480-RP-90-RS30-F1012-R3-EP**
		18485	**8048152**	**DFPD-480-RP-90-RS60-F1012-R3-EP**

Semi-rotary actuator DFPD-20-RP-90-RS30-F04

Part number: 8047621

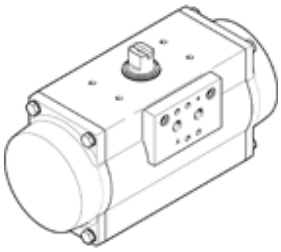

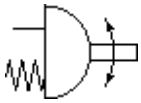

General operating conditions

Data sheet

Data sheet

Feature	values
Shipping date	View
Size of actuator	20
Flange hole pattern	F04 F05
Swivel angle	90 deg
End-position adjustment range at 0°	-5 ... 5 deg
End-position adjustment range at 90°	-5 ... 5 deg
Shaft connection depth	13.2 mm
Fitting connection conforms to standard	ISO 5211
Cushioning	No cushioning
Assembly position	Any
Mode of operation	single-acting
Design structure	Rack and pinion
Position detection	Optical
Closing direction	right-closing
Valve connection conforms to standard	VDI/VDE 3845 (NAMUR)
Connection for positioner and position sensor conforms to standard	VDI/VDE 3845 size AA 1
Working pressure	2 ... 8 bar
Nominal working pressure	3 bar
ATEX category Gas	II 2G
Explosion ignition protection type Gas	c T4 X
ATEX category Dust	II 2D
Explosion ignition protection type Dust	c 105°C X
Explosion-proof ambient temperature	-20°C <= Ta <= +80°C
Ambient temperature	-20 ... 80 °C
Operating medium	Compressed air in accordance with ISO8573-1:2010 [7:4:4]
Note on operating and pilot medium	Pressure dew point 10°C below ambient temperature/temperature of medium Lubricated operation possible (subsequently required for further operation)
CE symbol (see declaration of conformity)	according to EU-Ex protection guideline (ATEX)
Torque at rated working pressure and 0° rotation angle	16.5 Nm
Torque at nominal operating pressure with 90° swivel angle	13 Nm
Note about the torque	The operating torque of the actuator must not be higher than the maximum permissible torque listed in ISO 5211, with reference to the size of the mounting flange and of the coupling.
Spring return torque with 0° swivel angle	3.6 Nm
Spring return torque at 90°	7.1 Nm
Air consumption at 6 bar per cycle 0°-90°-0°	0.6 l
Product weight	1,371 g
Shaft connection	V11
Pneumatic connection	G1/8 NPT1/8-27
Materials note	Conforms to RoHS
Materials information for subbase	Wrought Aluminum alloy Anodized

Feature	values
Material number of sub-base	EN AW-6063-T6
Materials information for cover	Aluminum die cast coated
Material number, cover	EN AC-46100-D
Materials information for seals	NBR
Materials information for spring	Spring steel
Materials information, housing	Wrought Aluminum alloy Anodized
Material number for housing	EN AW-6063-T6
Materials information for piston rod	Aluminum die cast
Material number of piston rod	EN AC-46100-D
Materials information for bearing	POM
Material information, cam	Stainless steel casting
Material number of cam	1.4308
Screw material data	High alloy steel, non-corrosive
Material number, screw	1.4301
Materials information for shaft	Steel Nickel plated
Material number for shaft	1.0715

Quarter-turn actuator

DFPD

FESTO

Repair instructions (en)

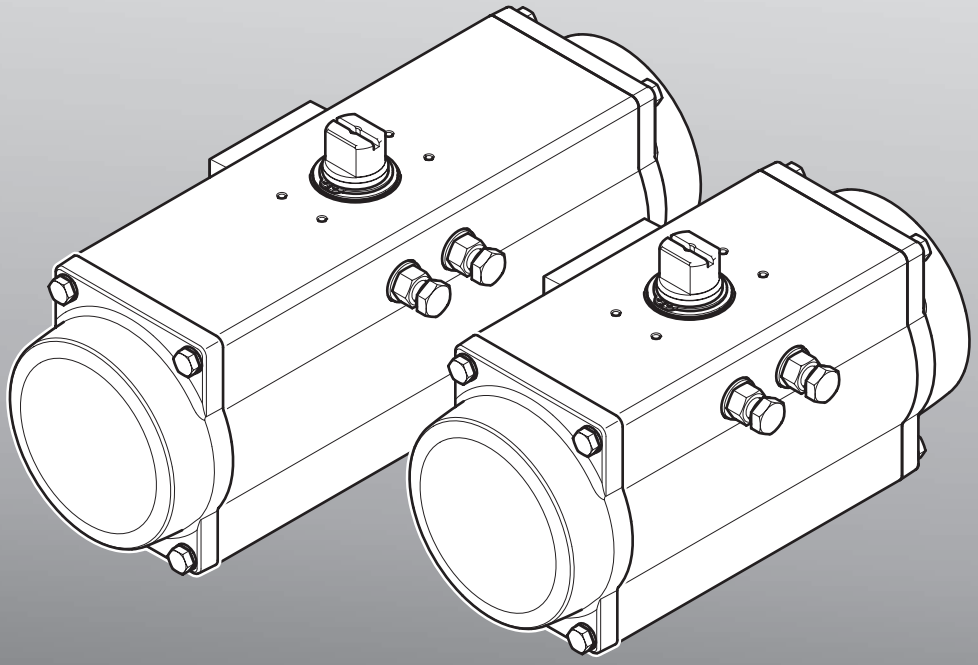

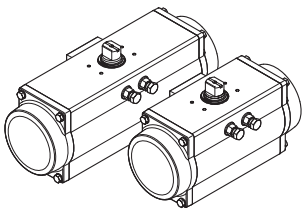

DFPDb_en

1 Important information

1.1 About these repair instructions

This document contains important information about proper repair of the quarter-turn actuator type DFPD.

Before carrying out a repair, these repair instructions must be read in full and followed.

Other documentation for this product:

- **Operating instructions (➔ www.festo.com/sp)**
- **Spare parts documentation (➔ www.festo.com/spareparts)**

1.2 Symbols used

1.2.1 Danger categories

The following symbol identifies text passages which draw attention to specific hazards.

Warning

Marking of special information

The following symbols identify text passages which contain special information.

Note

1.2.2 Repair steps

Familiarise yourself with the meaning of the symbols before starting the repair work.

Warning
There is a risk of injury due to uncontrolled movements of components.

Reference arrow
Symbol indicating the individual components to be noted.

Linear movement arrow
Carry out a linear movement

Slow movement
Carry out the dismantling / assembly step slowly and carefully.

Reference to repair steps
Follow the given repair steps.

Attention
Pay particular attention to notes and information.

Visual inspection
Perform a visual inspection.

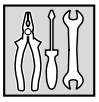

Tools

Use suitable tools.

Functional test / start-up

Follow the functional test / start-up information in the brief instructions (➔ www.festo.com).

1.2.3 Cleaning and greasing

Cleaning

The components must be thoroughly cleaned to remove all foreign particles, machining residues and old lubricants before they are greased.

Clean with a soft, lint-free cloth and non-abrasive cleaning agents. Check the compatibility of the cleaning agent with the materials to be cleaned.

Thin grease film outside

A film of grease covers the external surface so that the grease colour tarnishes the surface slightly.

Recommendation:

Apply the grease with a soft brush or similar.

1.3 Text designations used in these repair instructions

– General lists.

➔ Reference to further information

Underlined, blue text indicates a cross-reference or hyperlink that you can click on in the PDF.

1.4 Tools

Among other things, the following standard tools are required to repair the quarter-turn actuator:

– Spanner
– Retaining ring pliers for external retaining rings
– Torque wrench

2 General safety instructions and information

2.1 General safety instructions

Warning

Read and follow all safety instructions and information. Failure to comply with these safety instructions and information can result in serious injuries.

Note

To achieve ATEX conformity, the toothed discs must be replaced each time the corresponding screws or bolts are loosened. When screwing back in, observe the tightening torques given for the screws.

– The control block may only be repaired by authorised and trained personnel acting in accordance with the requirements in these repair instructions and the brief instructions for the device.

- Pay attention to cleanliness while repairing the quarter-turn actuator. Do not allow dirt particles to get into the quarter-turn actuator.
- A shutdown must be performed before any repair work is carried out.
- Before repairing the quarter-turn actuator, any attachments on it must be dismantled.
- The control block must be completely depressurised and de-energised, and reliably secured against unauthorised restarting before starting any repair work is started.
- Accidental switching on or concealed pressure can trigger unexpected movements during dismantling of the quarter-turn actuator. Therefore, completely vent the quarter-turn actuator before each repair.
- Use original spare parts only to repair the quarter-turn actuator.
- Wear the necessary personal protective equipment.
- In the event of damage to the quarter-turn actuator caused by
  - unauthorised manipulation,
  - non-intended use (misuse),
  - use of non-original spare parts

  all warranty and liability claims against the manufacturer expire.
- The technical documentation required for installation and start-up (functional test) of the quarter-turn actuator must be available.

2.2 General information

- Standard tools are needed to repair the quarter-turn actuator, which must be available in a service workshop (➔ Chapter 1.4 on page 6).
- Components and equipment replaced during repair must be disposed of in accordance with the relevant local environmental protection regulations.
- Where possible the repair should be carried out on a stable and flat work surface with space for small parts.
- The figures of the repair steps show size DFPD-300-...-D / S-...-60 (12 installed springs) by way of example. Individual minor differences between the quarter-turn actuator in hand and the illustrated example are possible.
- Depending on the temperature range (standard / T4 / T6), Festo recommends the following lubricants:
  - SYNTHY POLYMER 402/2 (standard variant)
  - HEVOLIT PE 280-1 FG (high-temperature variant T4)
  - RENOLIT SI 300 M (low-temperature variant T6)
- Individual components must be greased when installing the quarter-turn activator. The following table shows the recommended quantity of grease during the entire installation.

Size	Recommended quantity of grease for installation
DFPD-10	2 g
DFPD-20	3 g
DFPD-40	5 g
DFPD-80	7 g
DFPD-120	11 g
DFPD-160	15 g
DFPD-240	20 g
DFPD-300	30 g
DFPD-480	45 g
DFPD-700	55 g
DFPD-900	65 g
DFPD-1200	85 g
DFPD-2300	110 g

3.3 DFPD-20-...-S components list

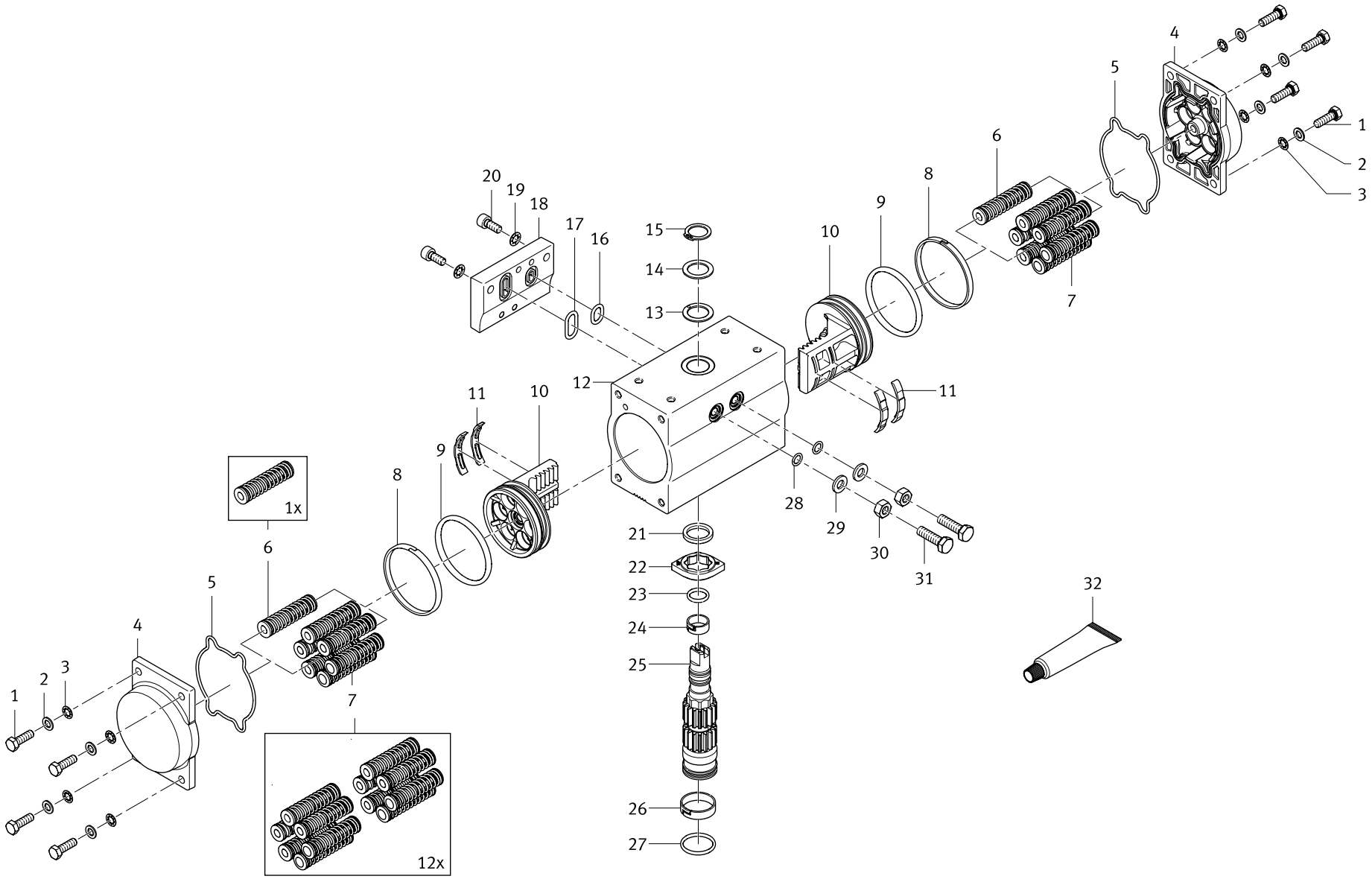

3.3.1 DFPD-20-...-S bill of materials

No.	Designation, type
1	Hexagon head screw, ISO 4017-M5×16-A2-70
2	Ring, 5.2×9×1-1.4301
3	Toothed disc, DIN 6797-J-5,3-A2-70
4	End cap
5	Moulded seal
6	Spring module
7	Spring module
8	Sliding ring
9	O-ring, 43×3.5-N-NBR70
10	Piston
11	Slide element
12	Housing
13	Sliding ring
14	Shim, DIN 988-14×20×1-A2
15	Retaining ring, DIN 471-14×1-A2
16	O-ring, I3601 B-9×2-N-NBR70
17	O-ring, I3601 B-13×2-N-NBR70
18	Mounting plate
19	Toothed disc, DIN 6797-J-5,1-A2-70
20	Socket head screw, DIN 912-M5×12-A2-70
21	Sliding ring
22	Cam
23	O-ring, I3601 B-11×2-N-NBR70
24	Sliding ring
25	Shaft
26	Sliding ring
27	O-ring, I3601 B-19×2-N-NBR70
28	O-ring, I3601 B-5.28×1.78-N-NBR70
29	Ring, 6.2×12×1.5-1.4301
30	Hex nut, DIN 934-M6-A2-70
31	Regulating screw
32	Lubricant, SYNTHY POLYMER 402/2

4 Repair steps

4.1 Dismantling

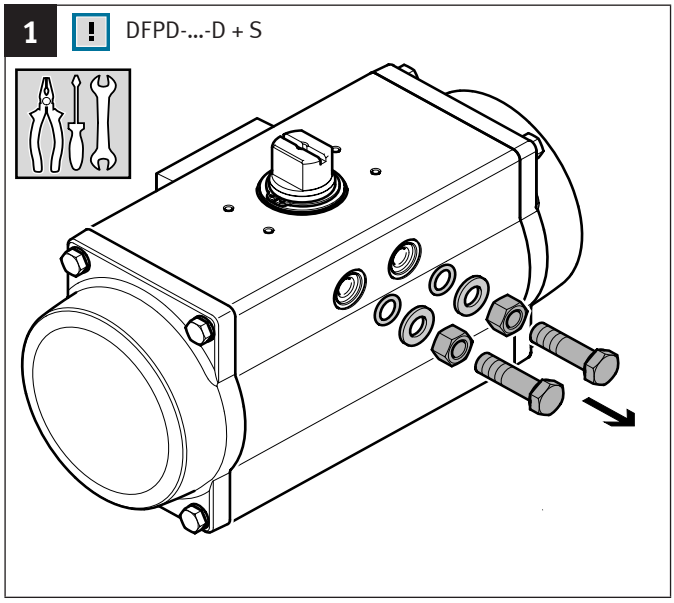

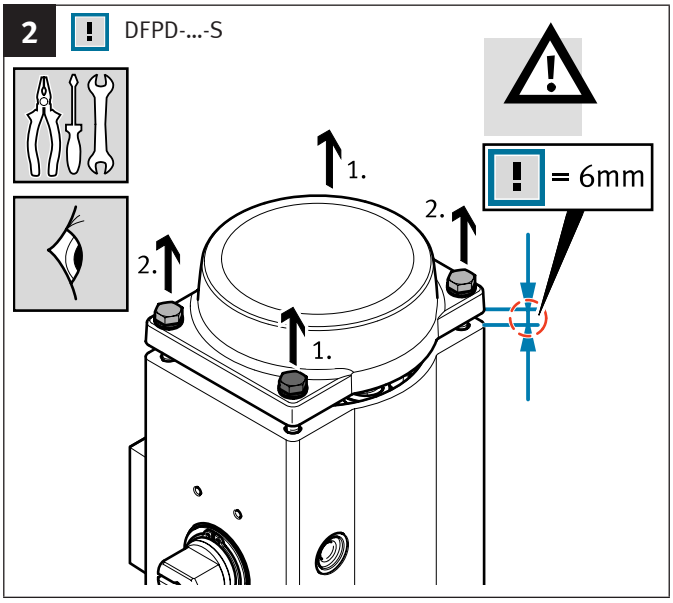

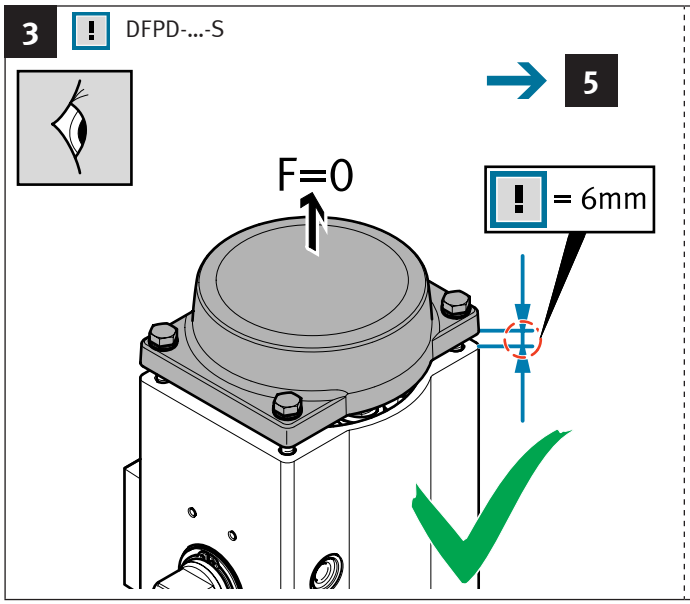

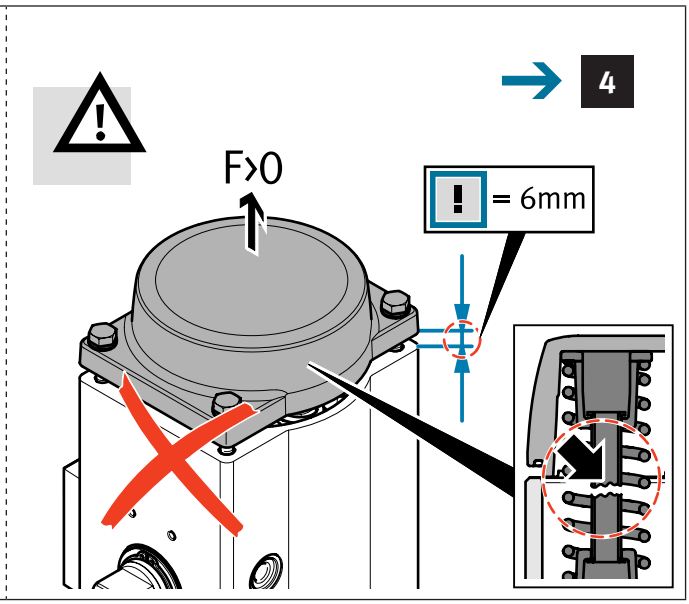

4 DFPD-...-S

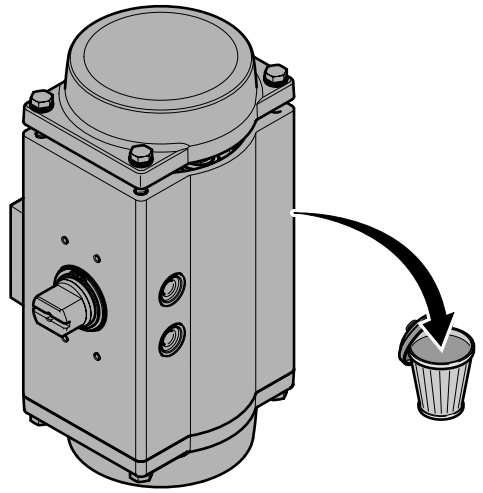

5 DFPD-...-S

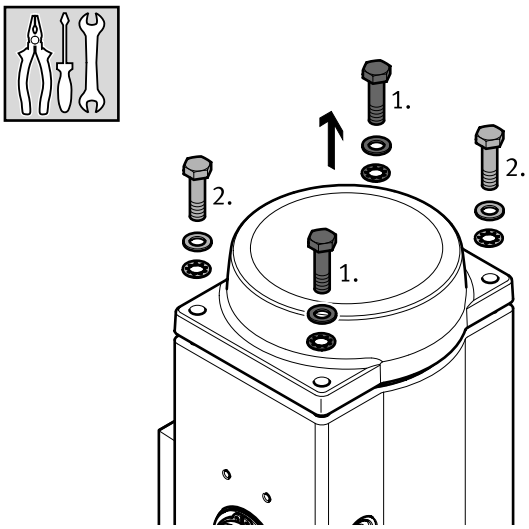

DFPD-...-D

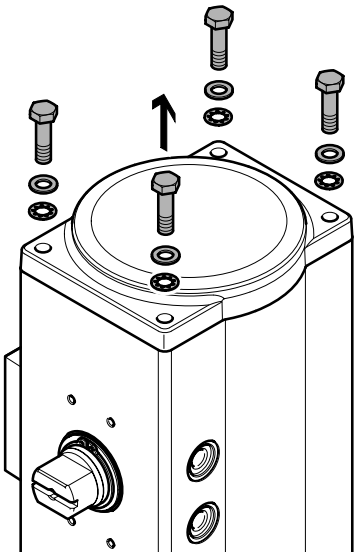

6 DFPD-700/900/1200/2300...-S

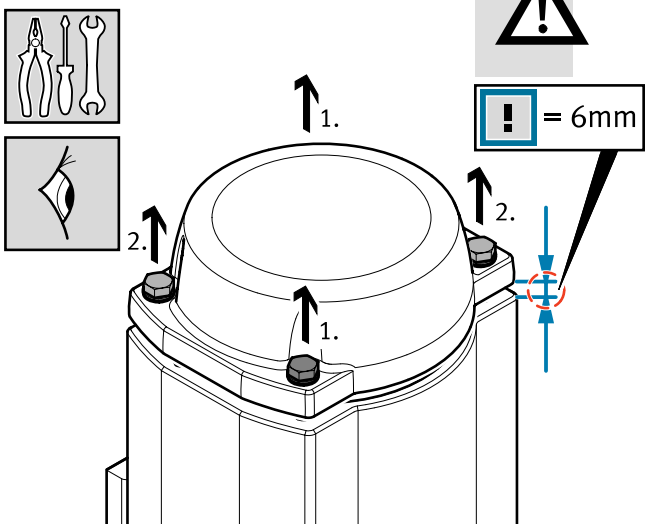

7 DFPD-700/900/1200/2300...-S

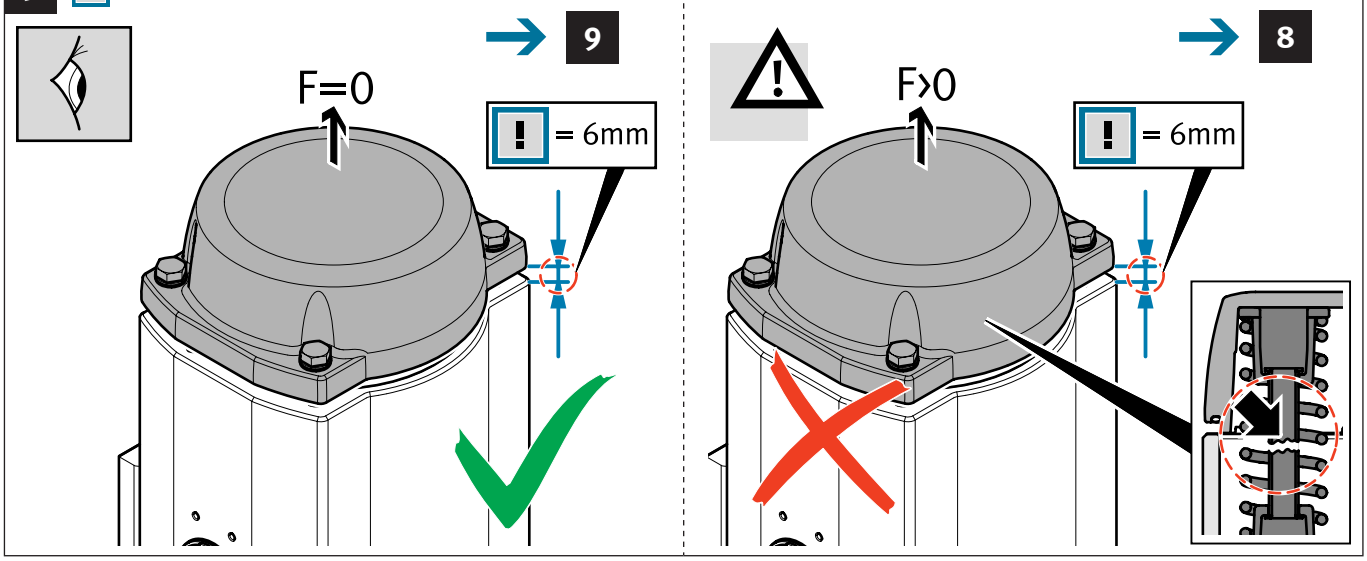

8 DFPD-700/900/1200/2300...-S

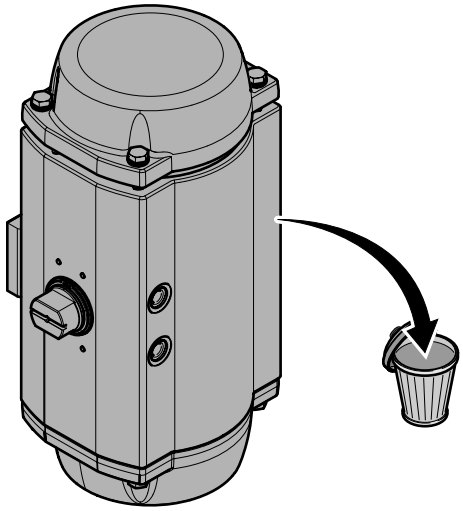

9 DFPD-700/900/1200/2300...-S

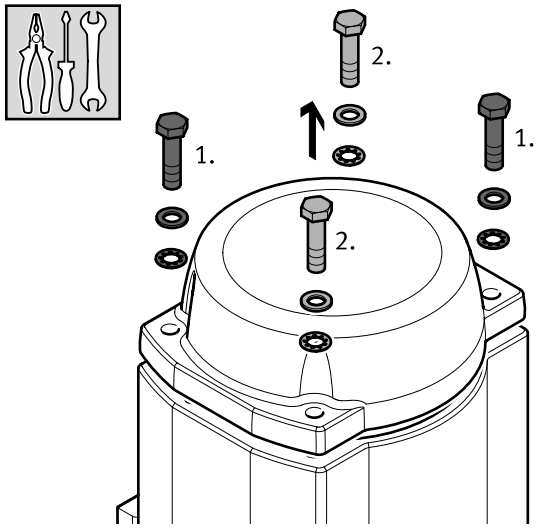

DFPD-700/900/1200/2300...-D

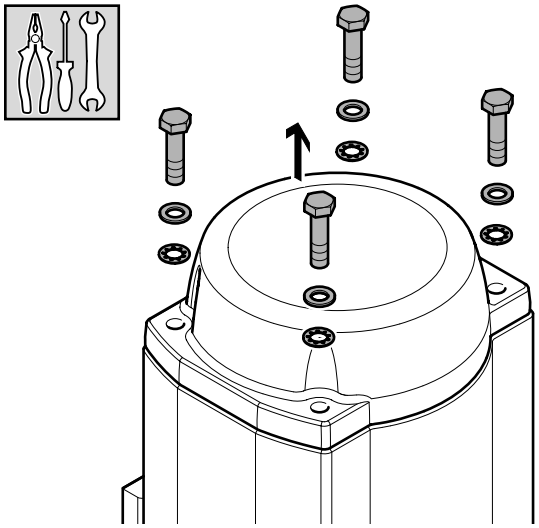

10a

DFPD-...-S

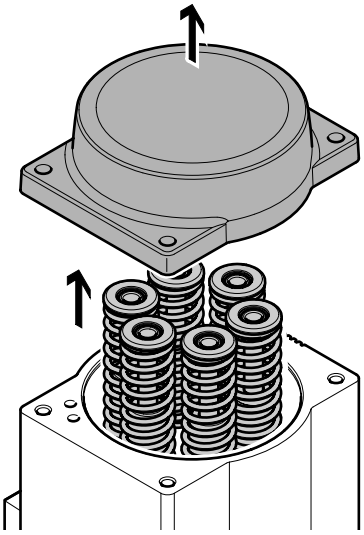

DFPD-...-D

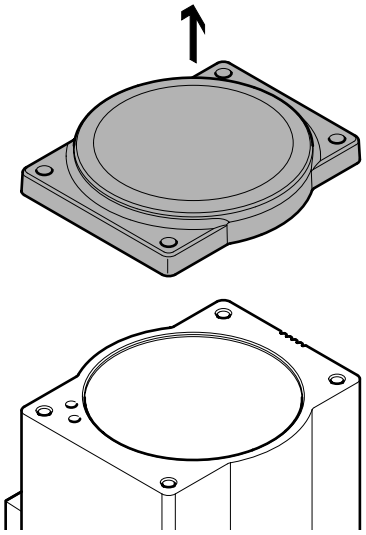

10b

DFPD-700/900/1200/2300...-S

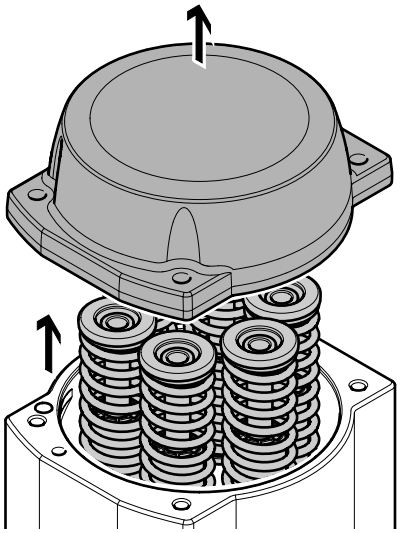

DFPD-700/900/1200/2300...-D

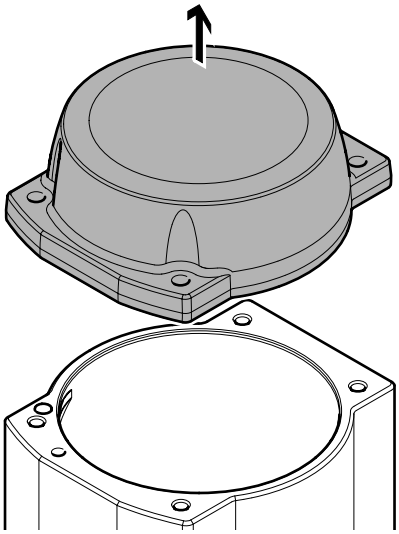

11a

DFPD-...-S

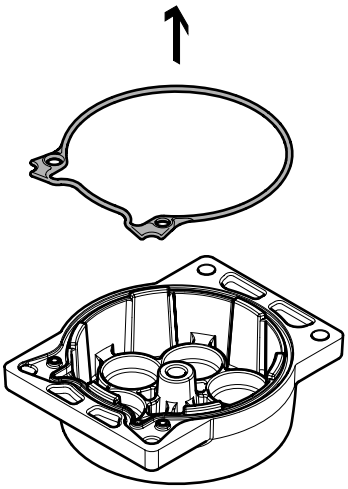

DFPD-...-D

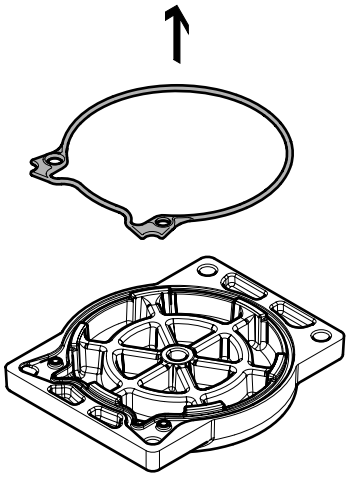

11b DFPD-700/900/1200/2300...-D+S

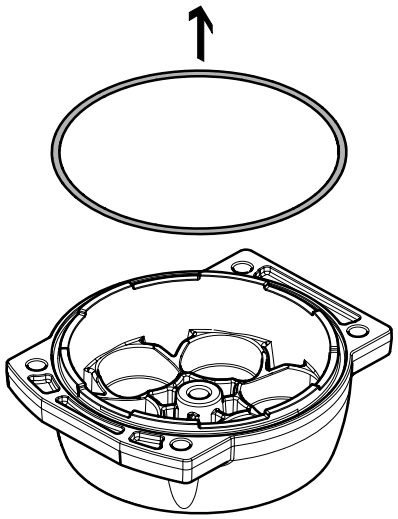

12 DFPD-...

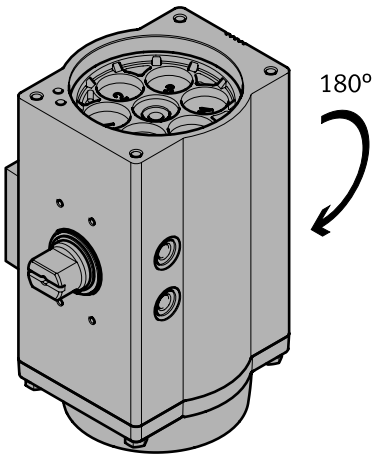

DFPD-700/900/1200/2300...

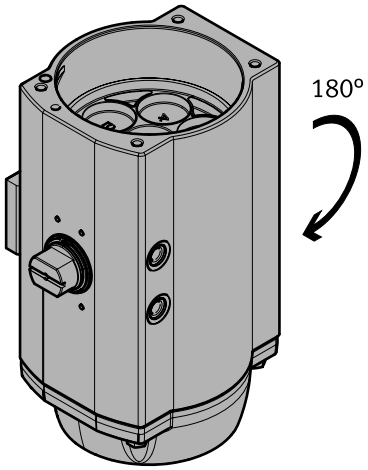

13 DFPD-...-S

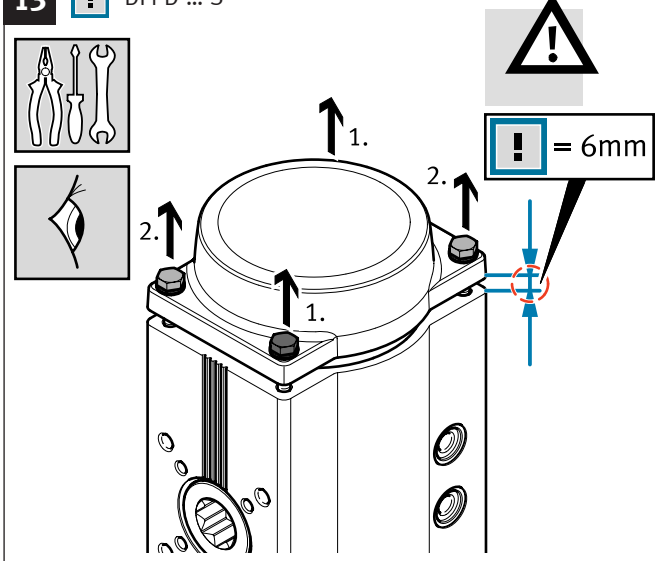

14 DFPD-...-S

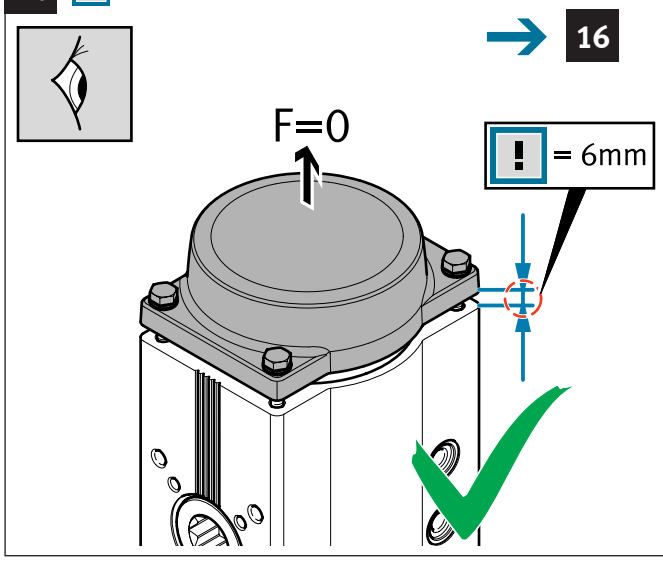

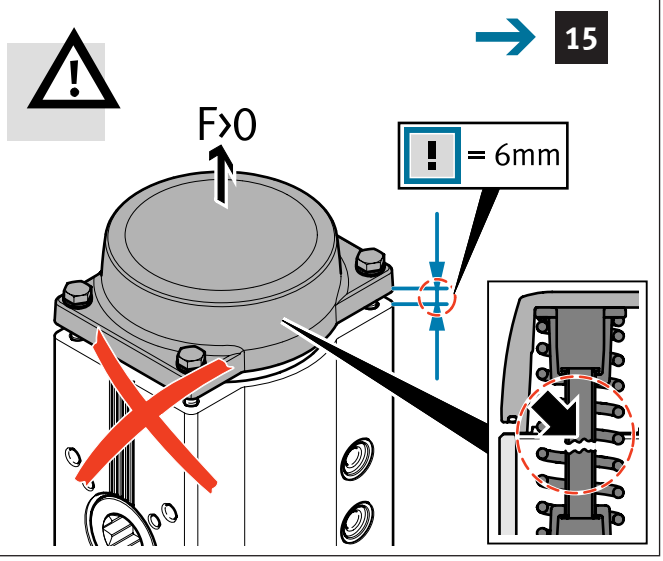

15 DFPD-...-S

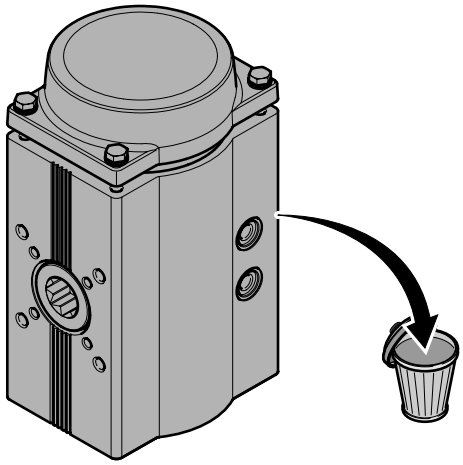

16 DFPD-...-S

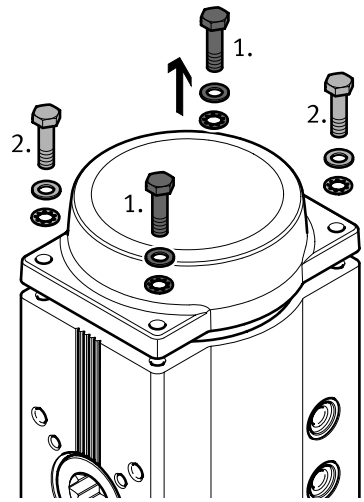

DFPD-...-D

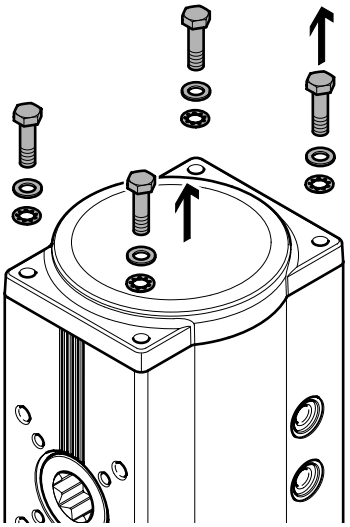

17 DFPD-700/900/1200/2300...-S

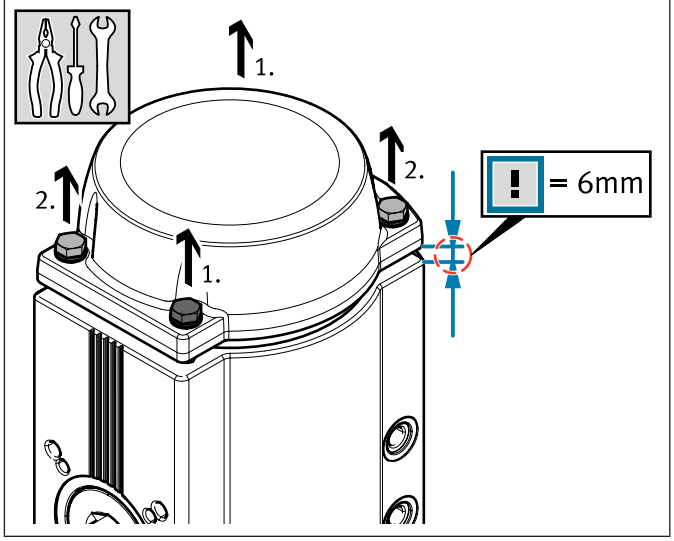

18 DFPD-700/900/1200/2300...-S

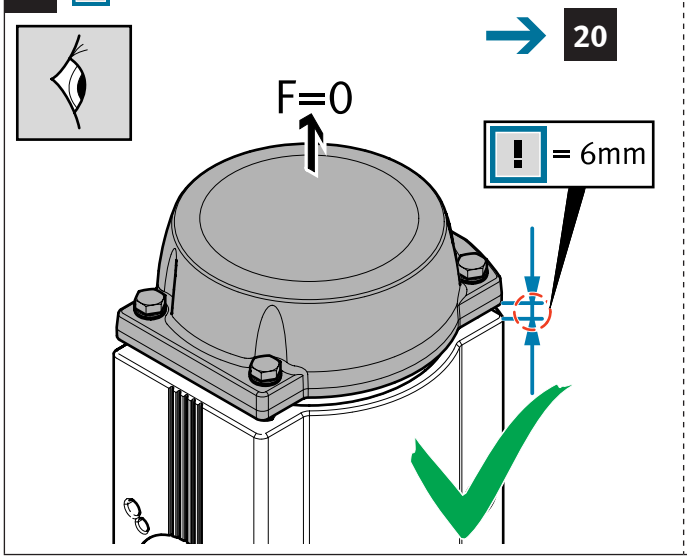

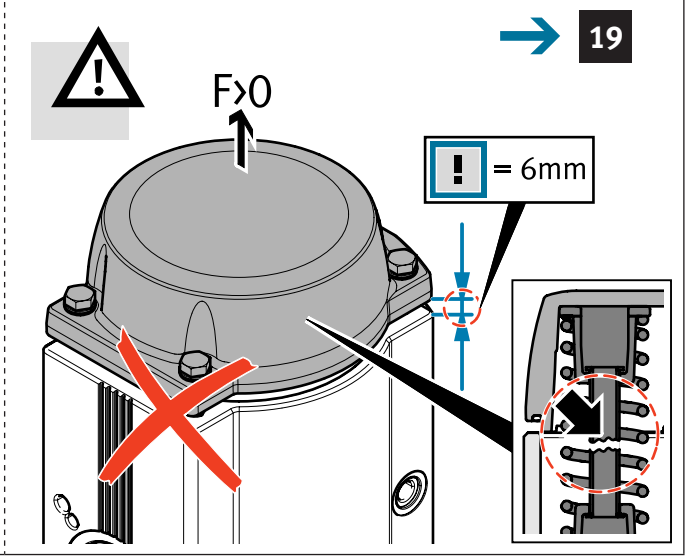

19 DFPD-700/900/1200/2300...-S

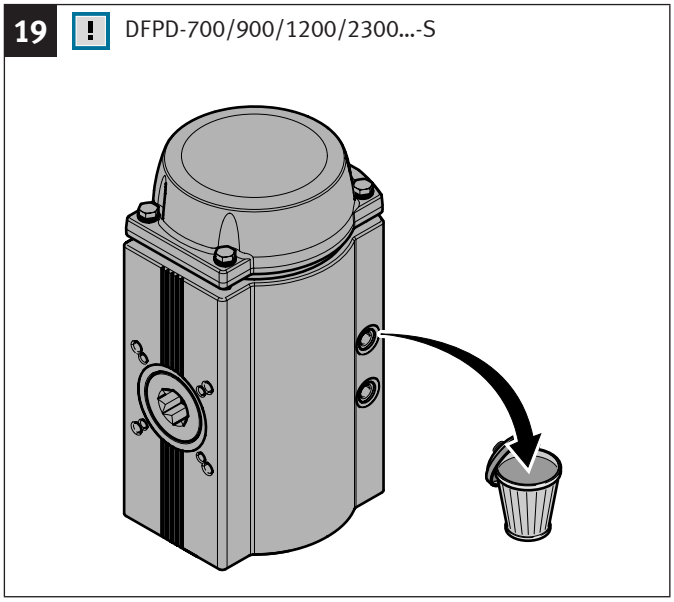

20 DFPD-700/900/1200/2300...-S

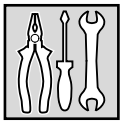

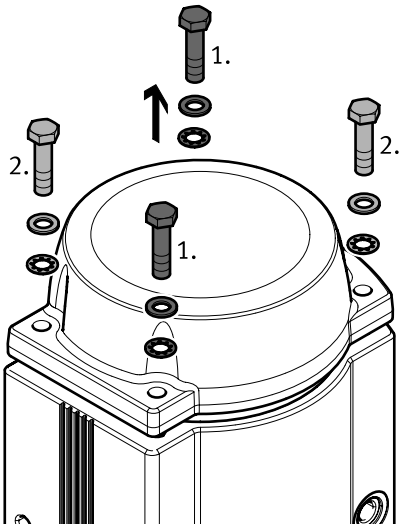

DFPD-700/900/1200/2300...-D

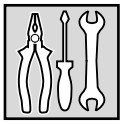

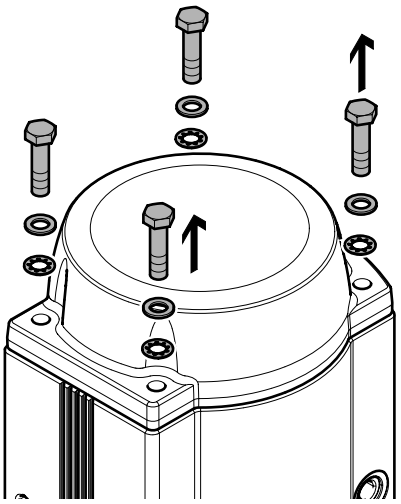

21a DFPD-...-S

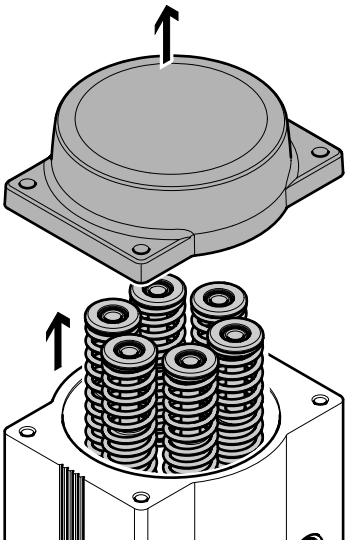

DFPD-...-D

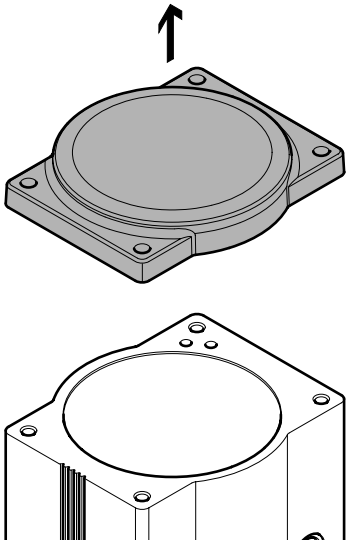

21b DFPD-700/900/1200/2300...-S

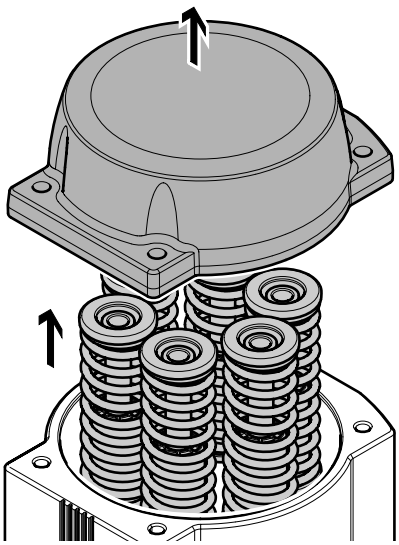

DFPD-700/900/1200/2300...-D

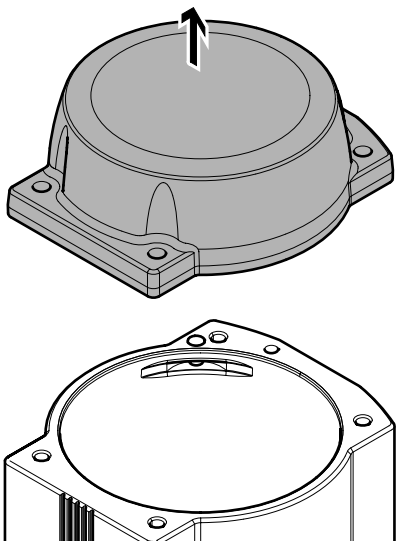

22a DFPD-...-S

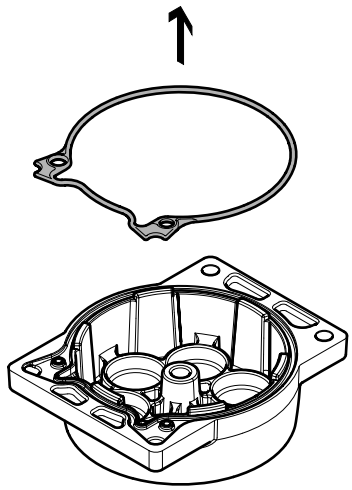

DFPD-...-D

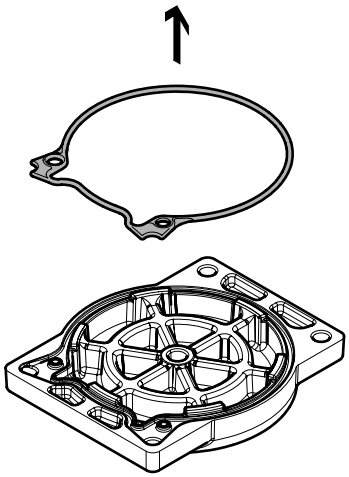

22b DFPD-700/900/1200/2300...-D+S

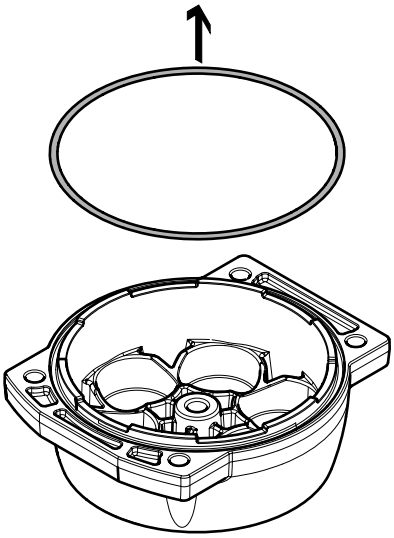

23 DFPD-...-D + S

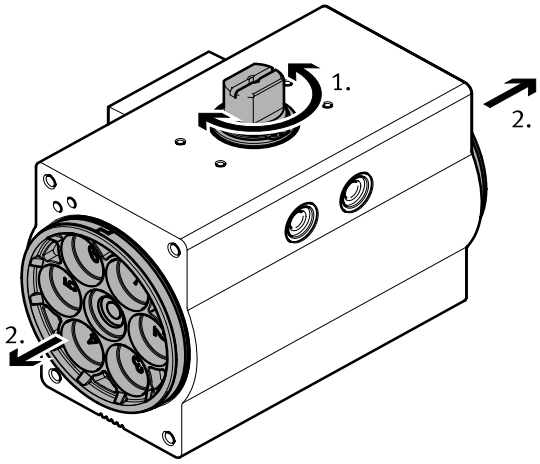

24 DFPD-...-90°

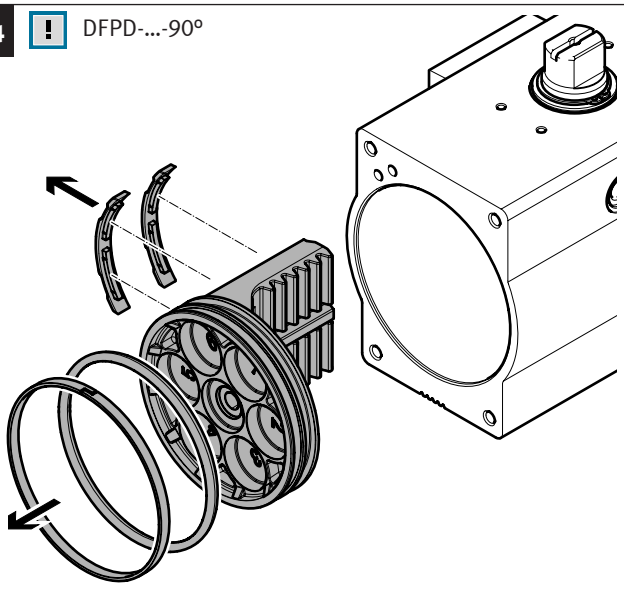

DFPD-...-120°/135°/180°

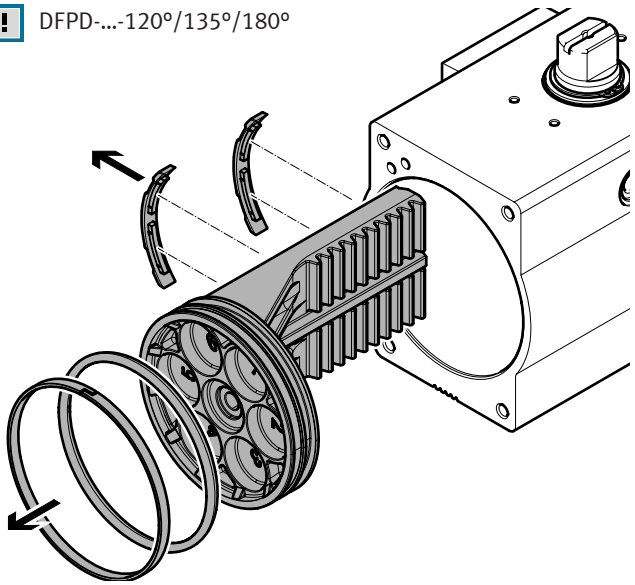

25 DFPD-...-90°

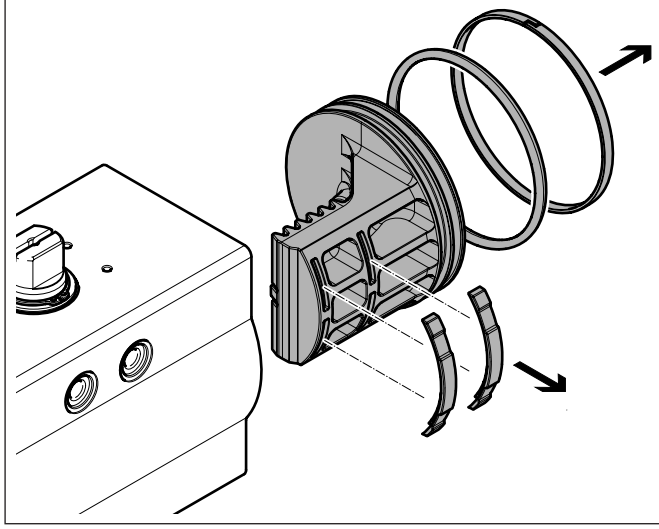

DFPD-...-120°/135°/180°

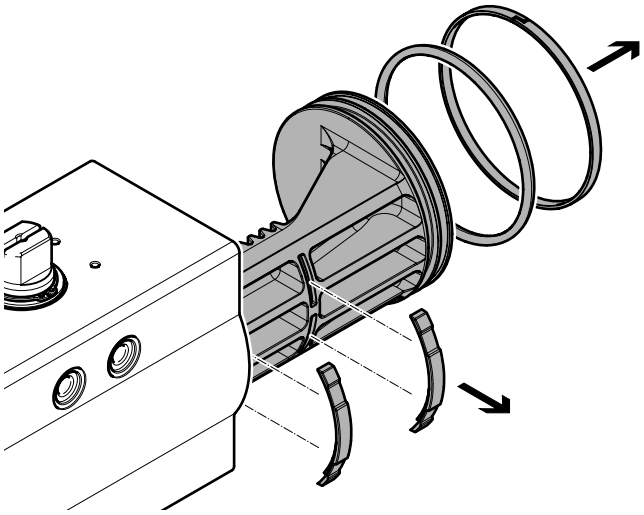

26

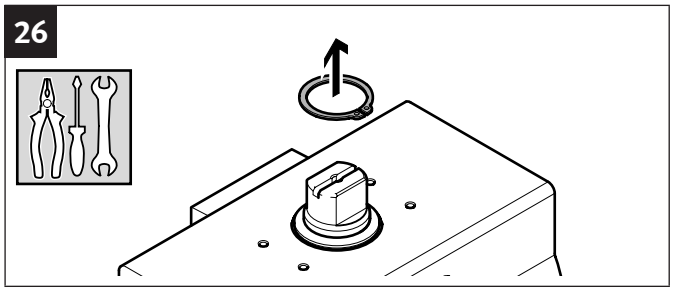

27

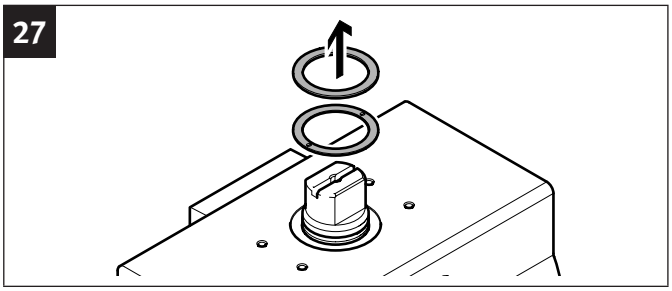

28

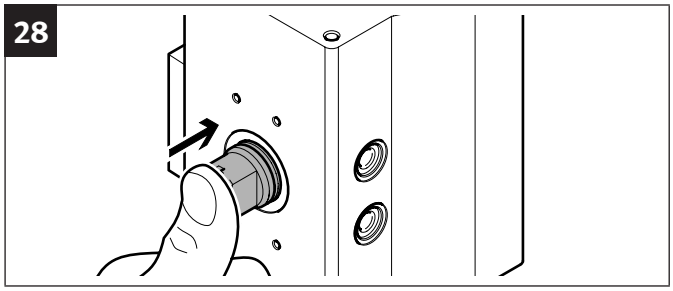

29a DFPD-...-90°

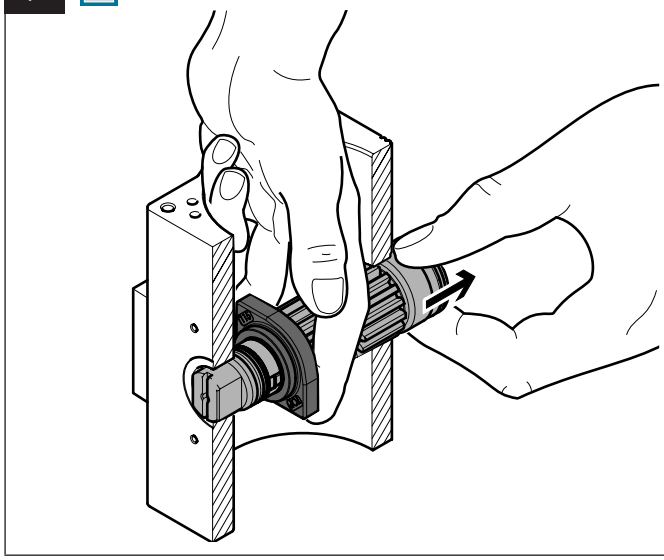

DFPD-...-120°

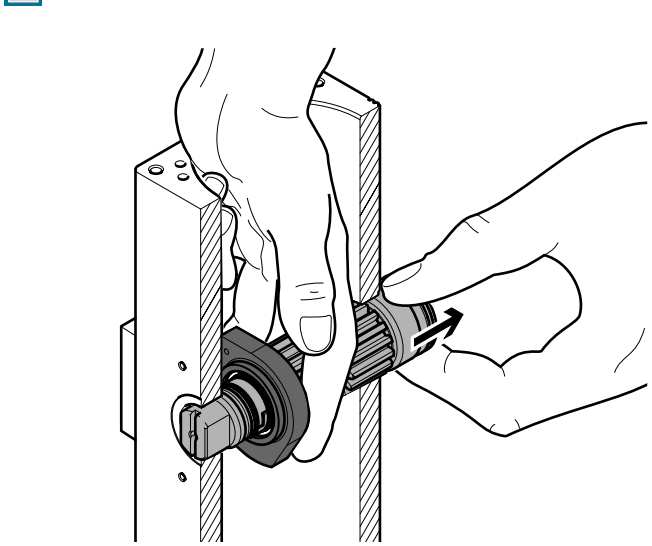

29b

DFPD-...-135°

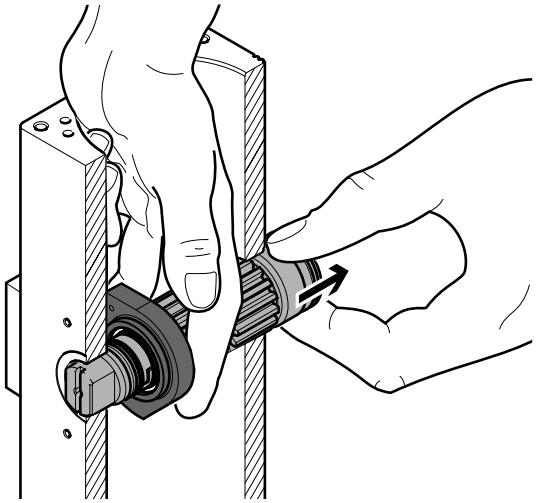

DFPD-...-180°

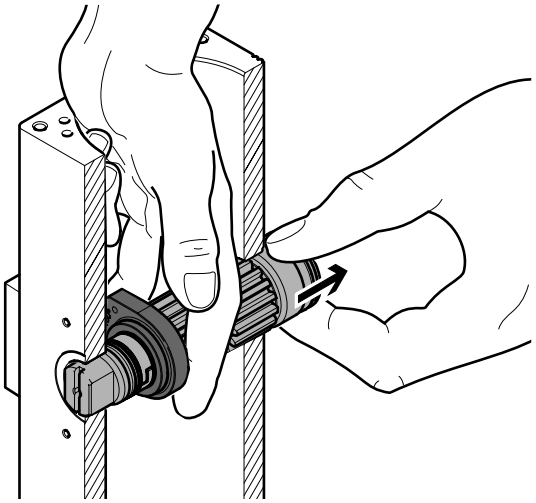

30a

DFPD-...-90°

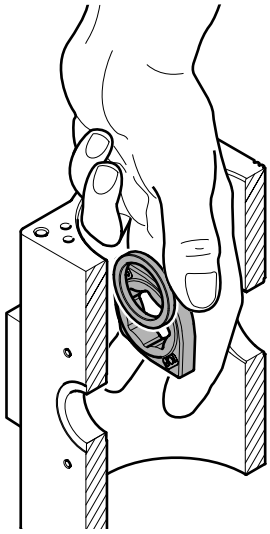

DFPD-...-120°

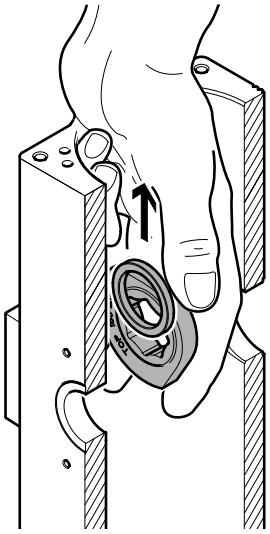

30b

DFPD-...-135°

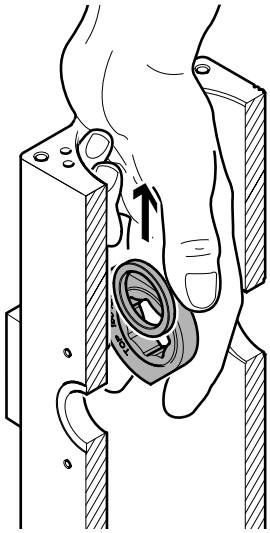

DFPD-...-180°

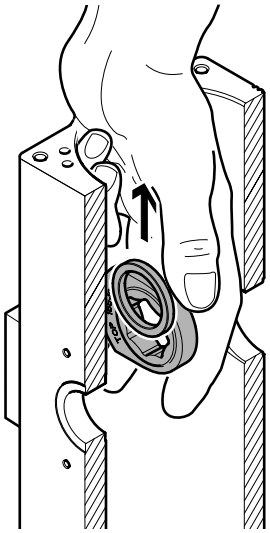

31

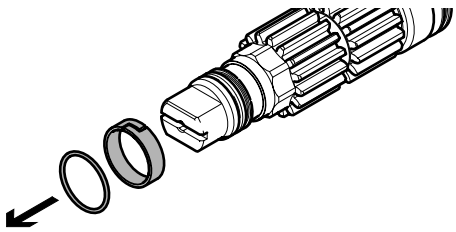

32

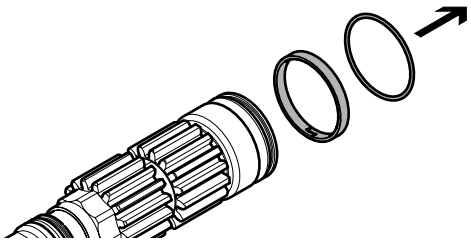

33

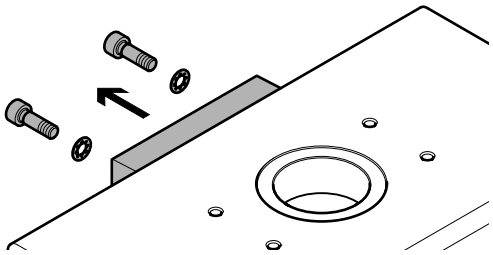

34a

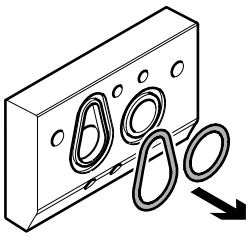

34b DFPD-700/900/1200/2300

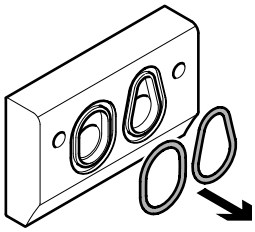

35a

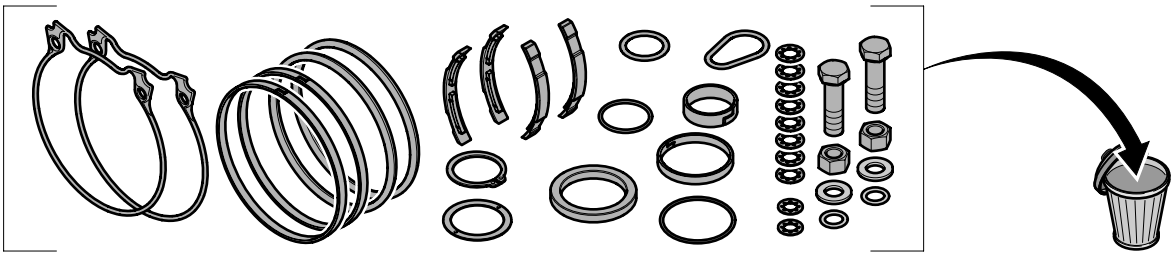

35b DFPD-700/900/1200/2300

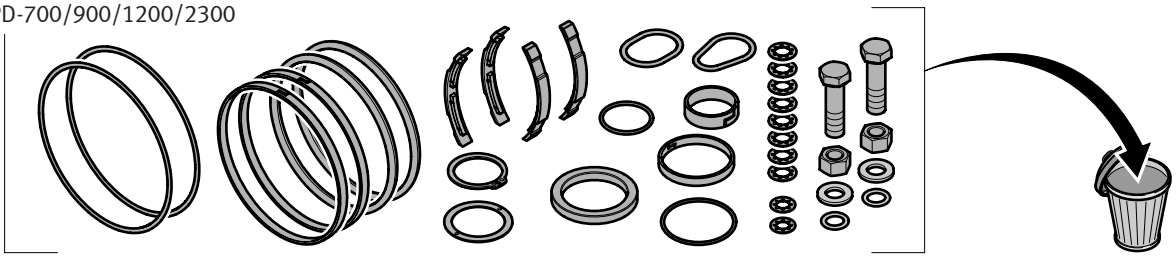

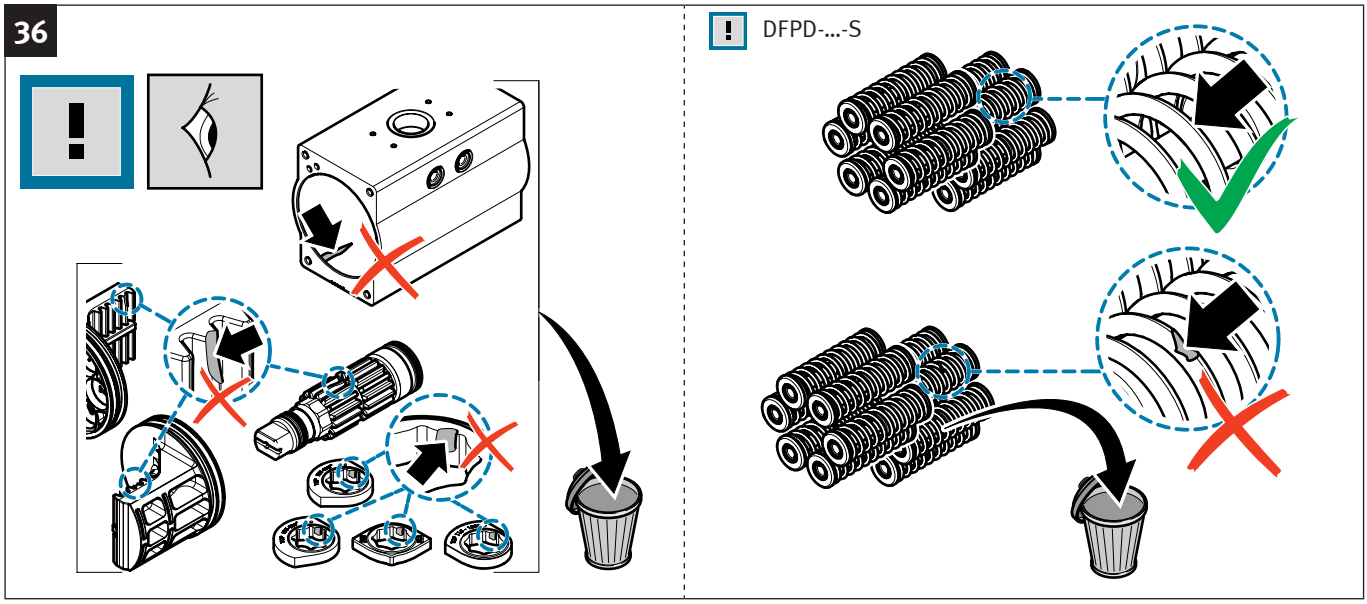

4.2 Assembly

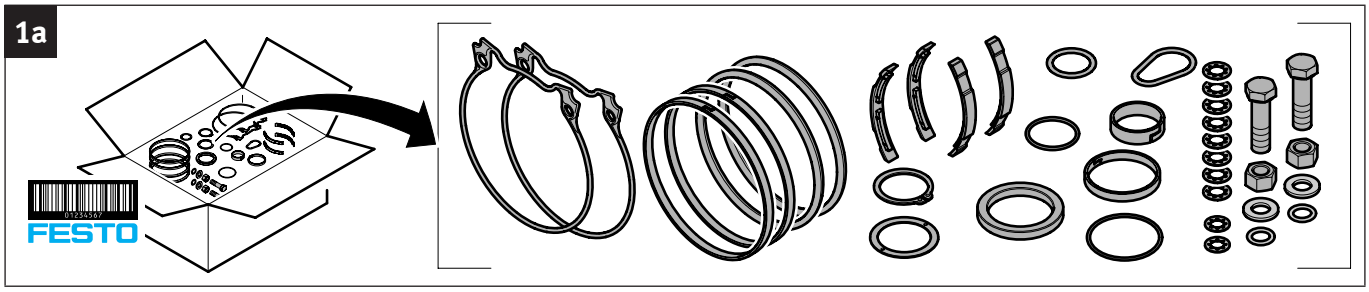

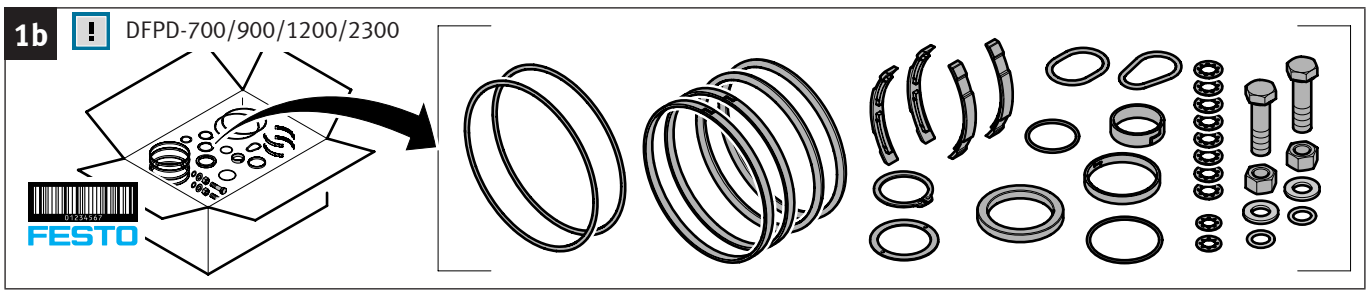

2

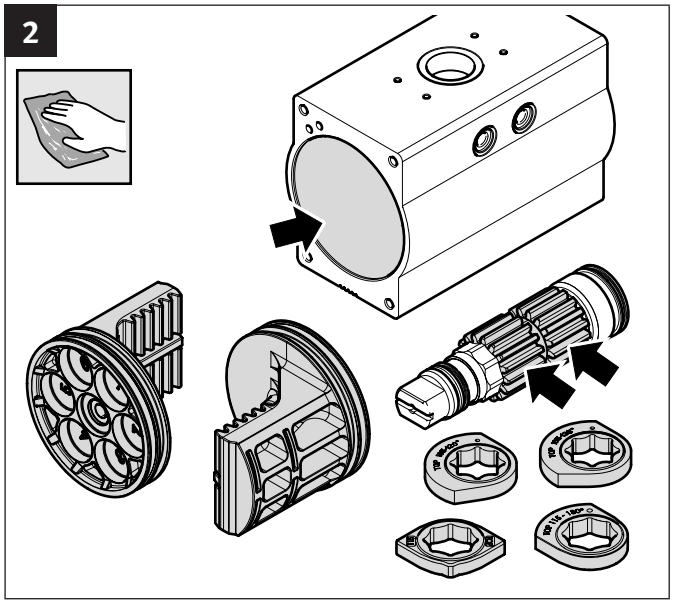

3a

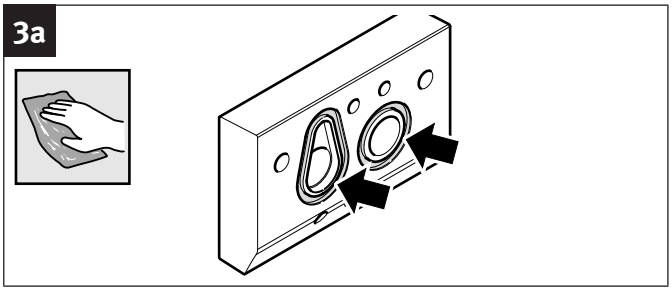

3b DFPD-700/900/1200/2300

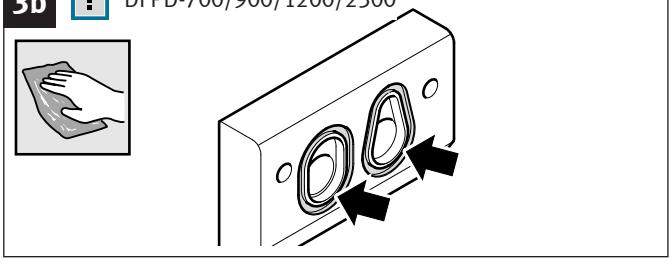

4

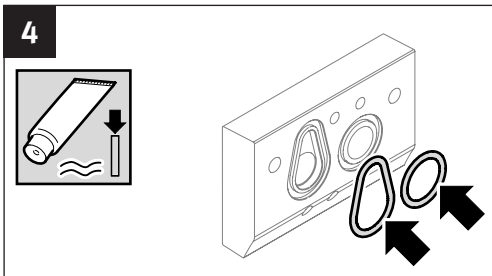

DFPD-700/900/1200/2300

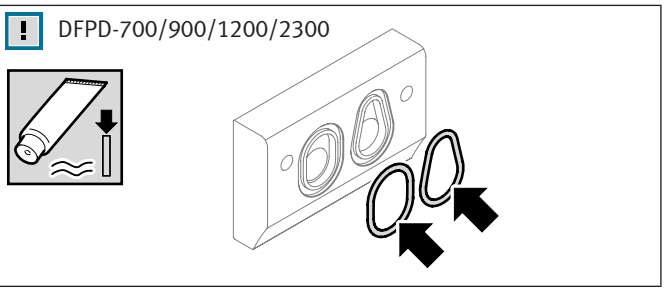

5

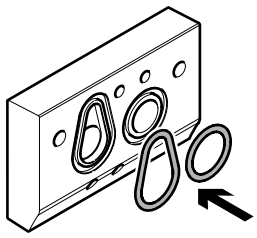

DFPD-700/900/1200/2300

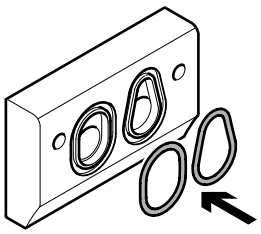

6

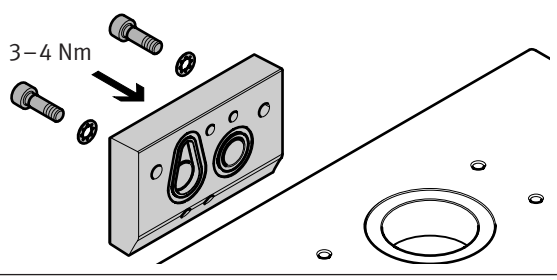

DFPD-700/900/1200/2300

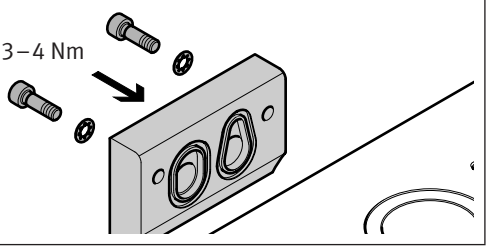

i

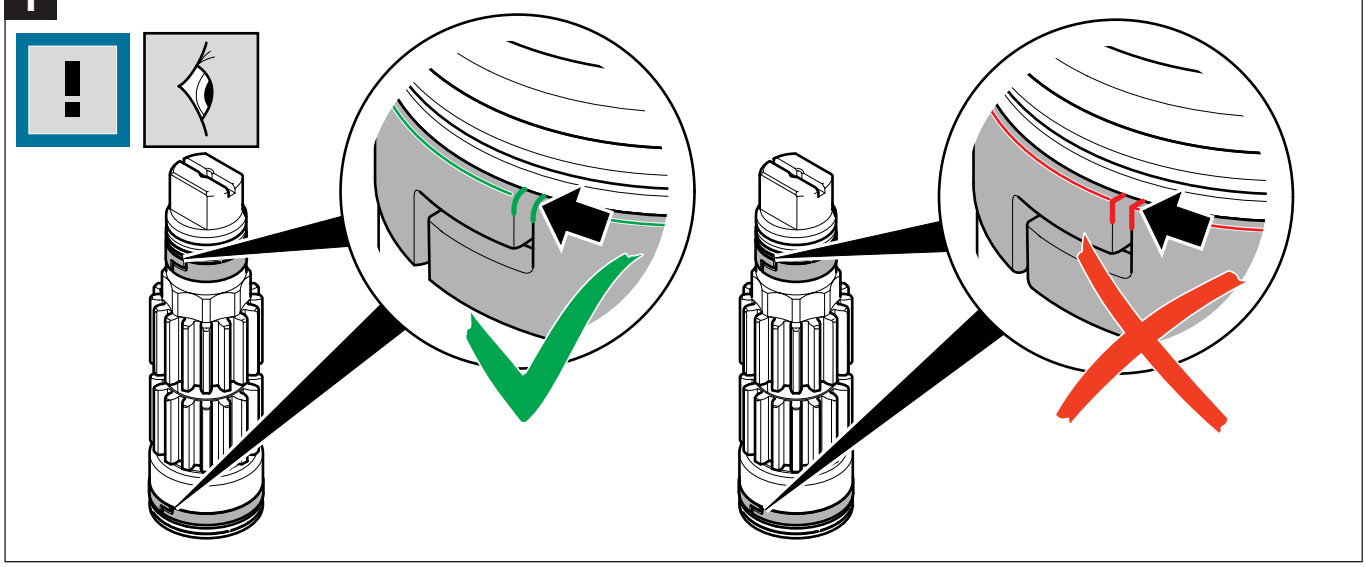

7

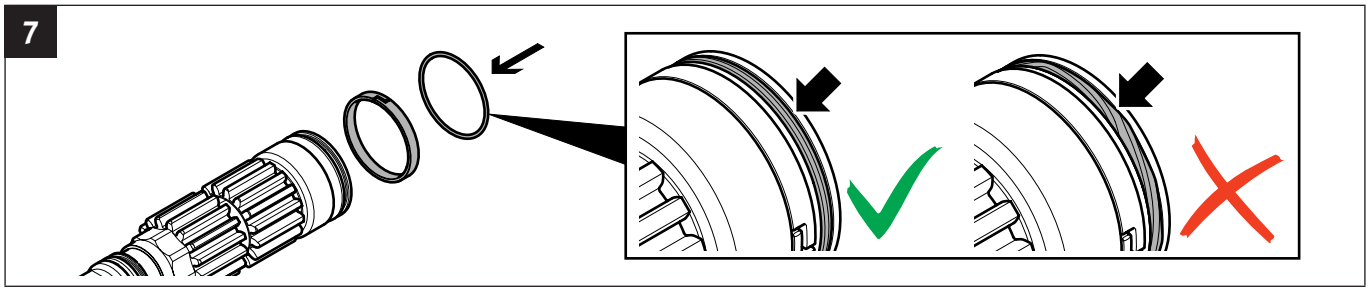

8

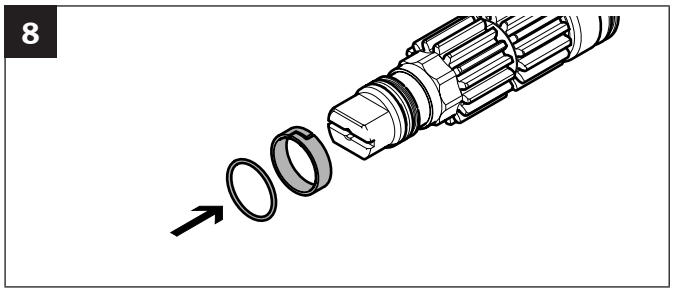

9

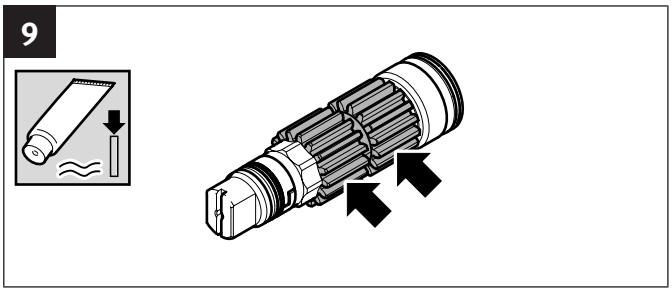

10a

DFPD-...-90°-R

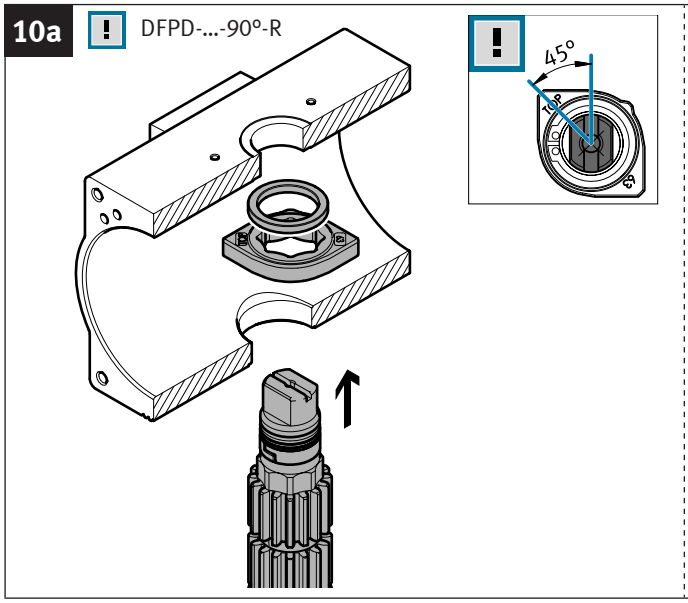

DFPD-...-90°-L

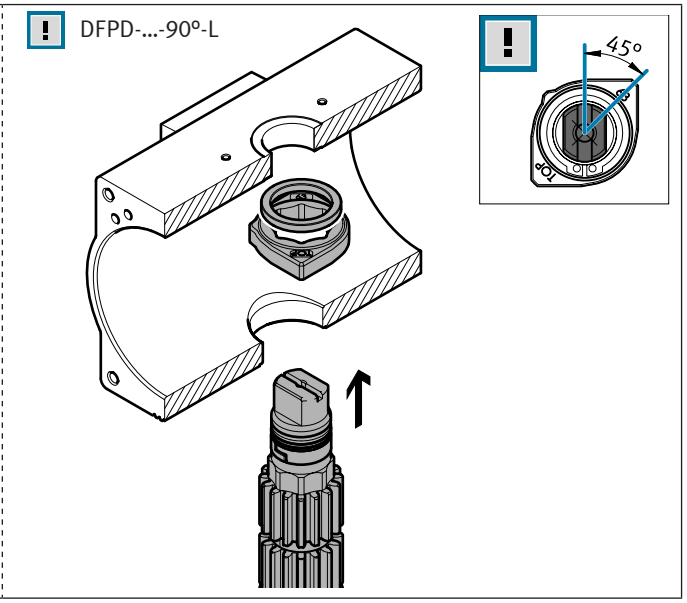

10b DFPD-...-120°-R

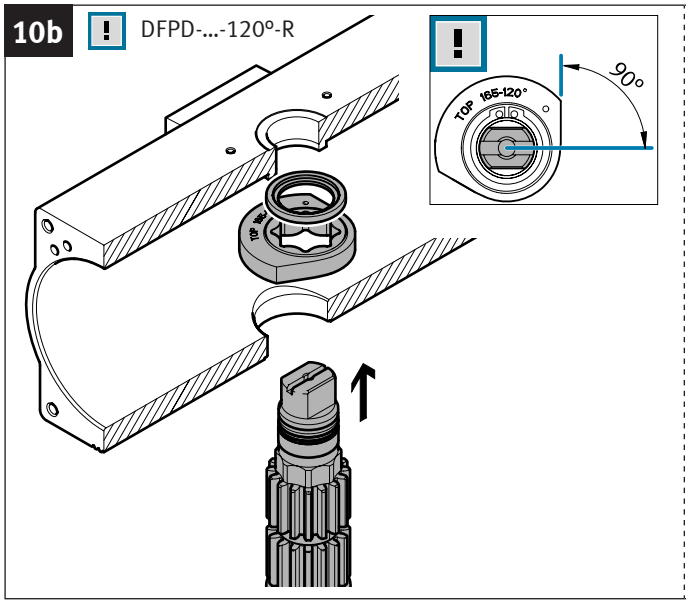

DFPD-...-120°-L

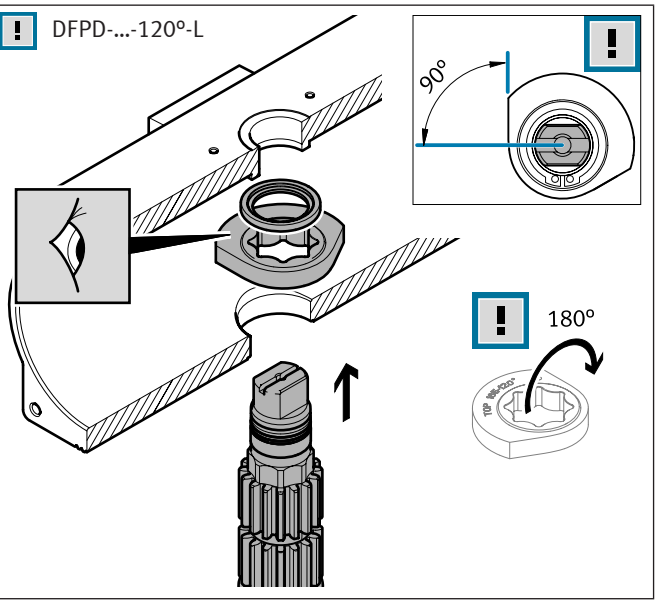

10c DFPD-...-135°-R

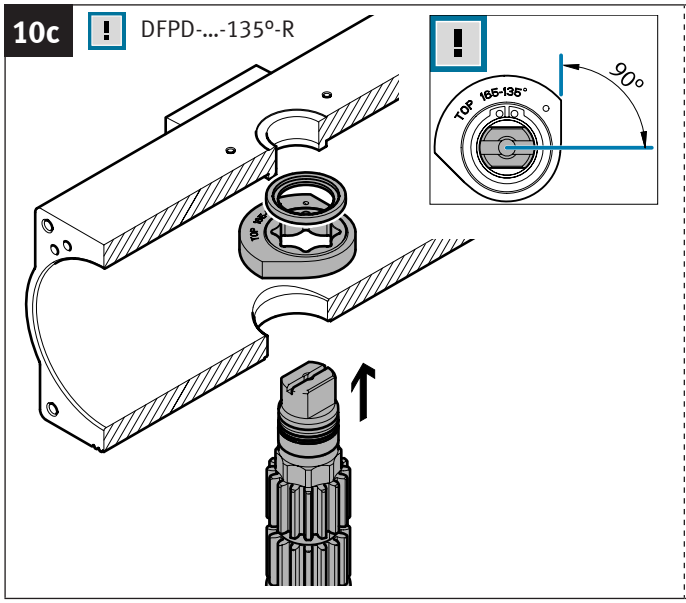

DFPD-...-135°-L

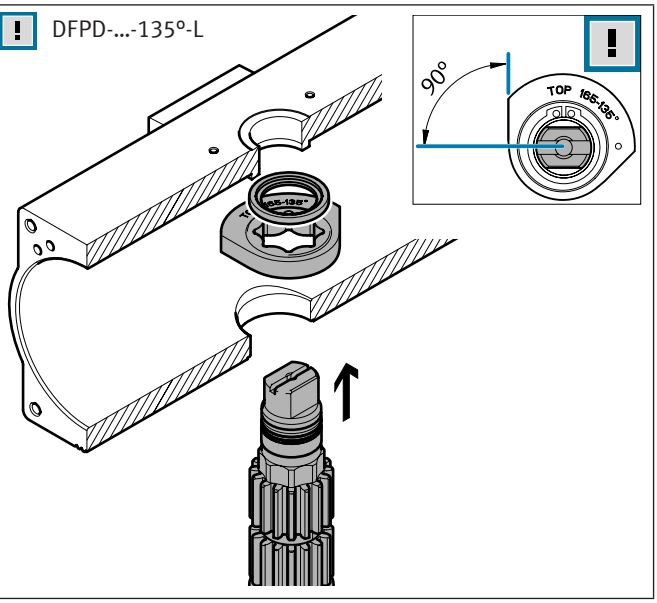

10d DFPD-...-180°-L/R

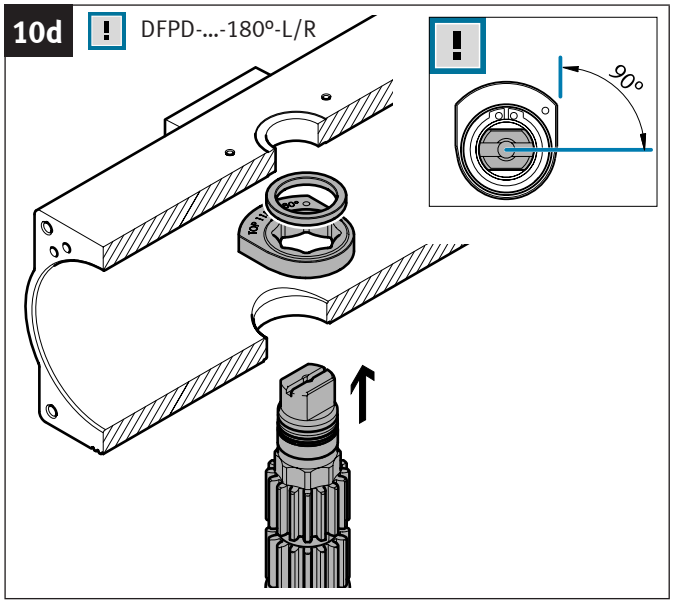

11

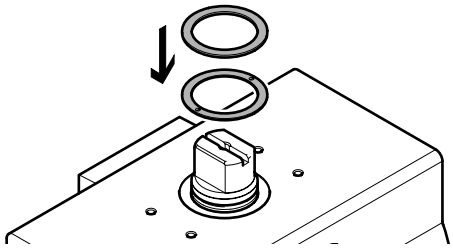

12

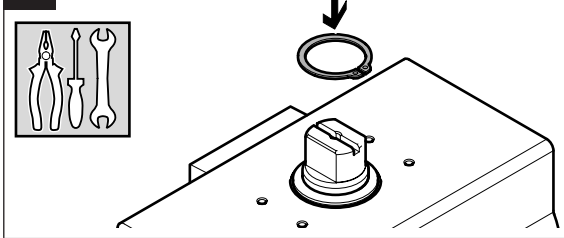

13

DFPD-...-90°

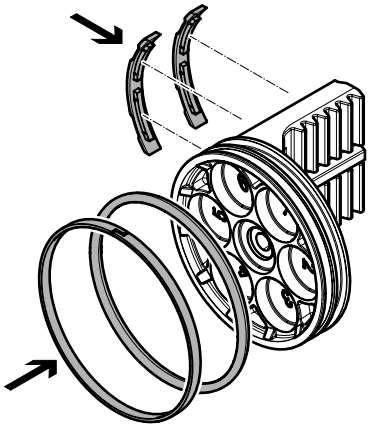

DFPD-...-120°/135°/180°

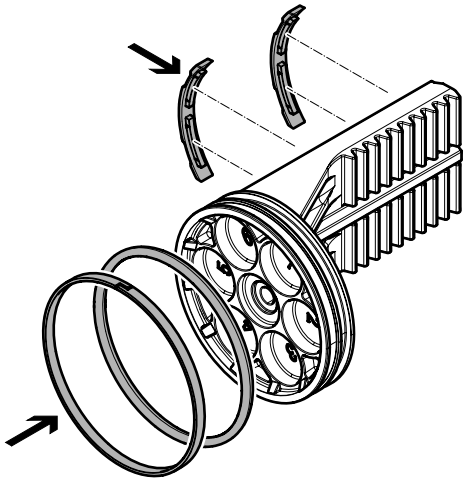

14

DFPD-...-90°

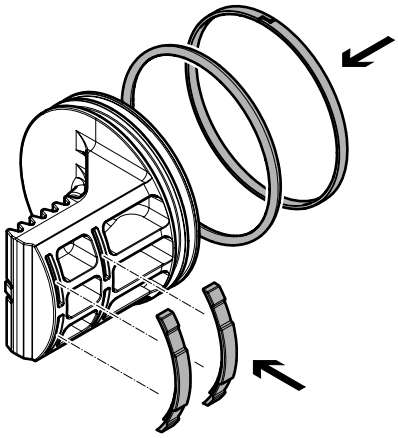

DFPD-...-120°/135°/180°

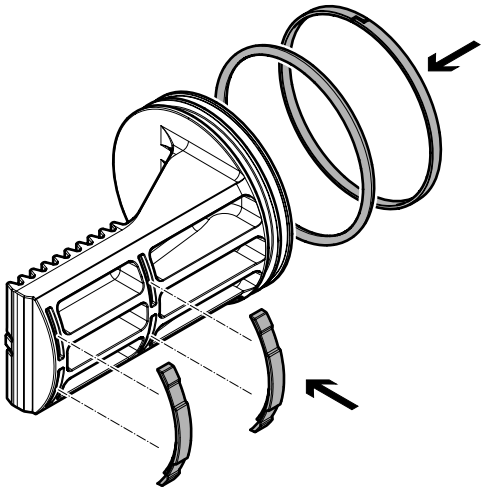

15

DFPD-...-90°

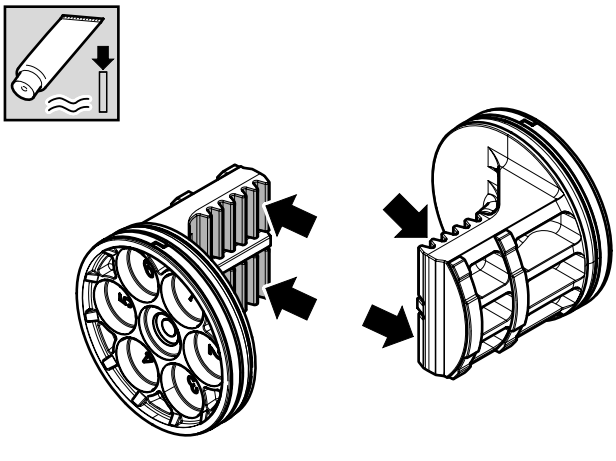

DFPD-...-120°/135°/180°

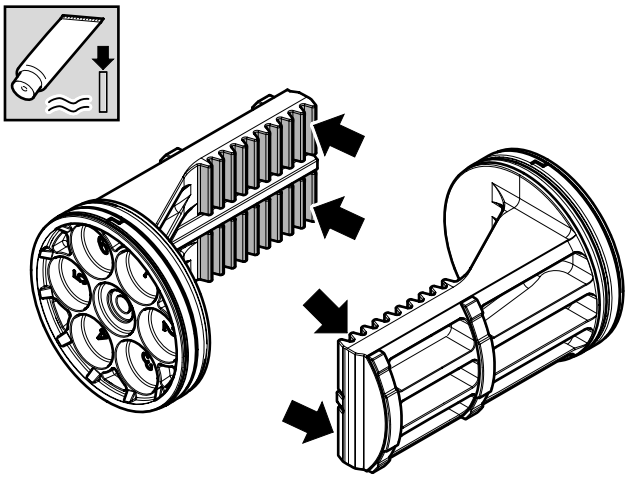

16a

DFPD-...-90°-R

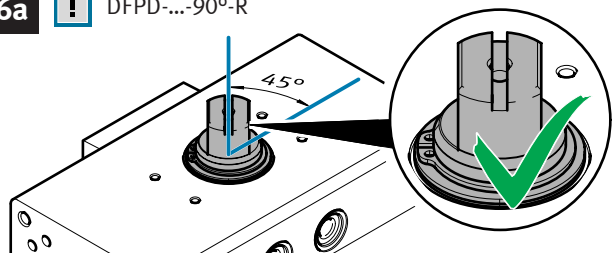

DFPD-...-90°-L

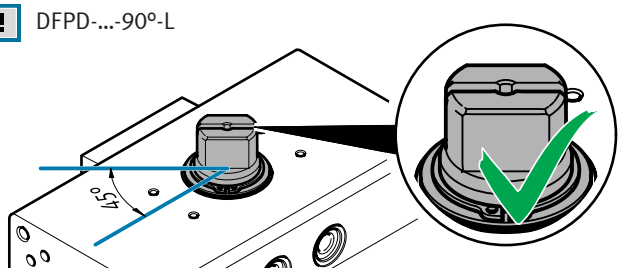

DFPD-...-90°-R

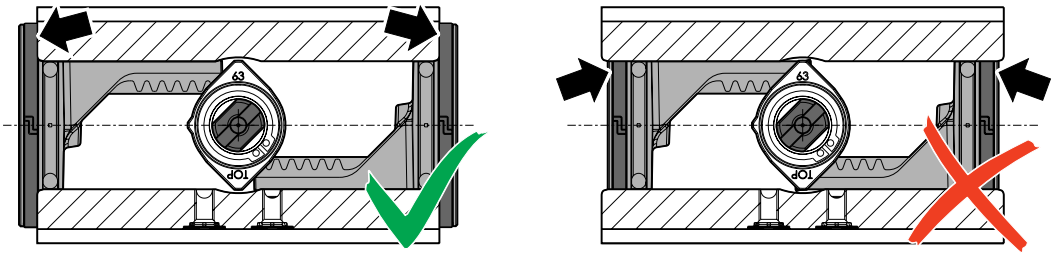

DFPD-...-90°-L

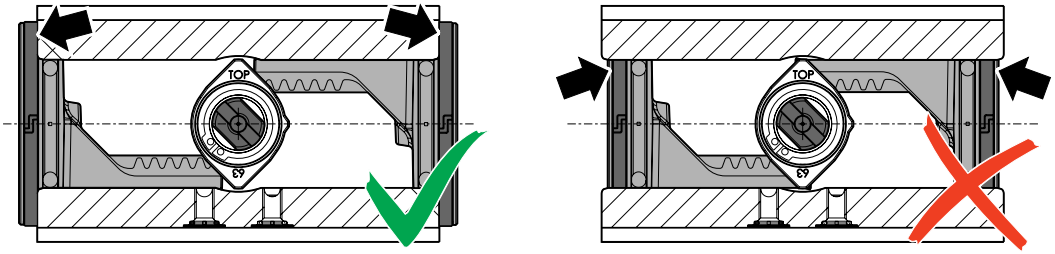

17a

DFPD-...-90°-R

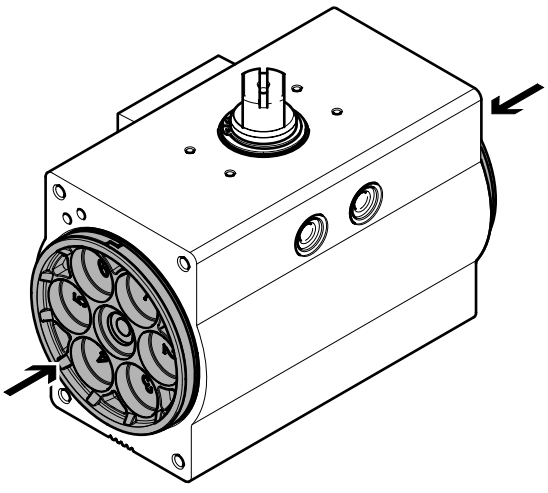

DFPD-...-90°-L

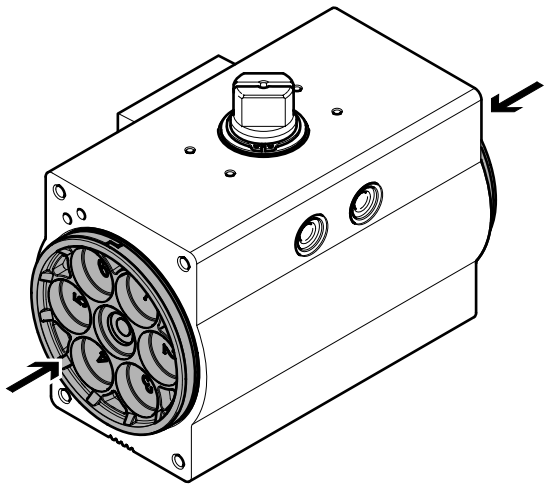

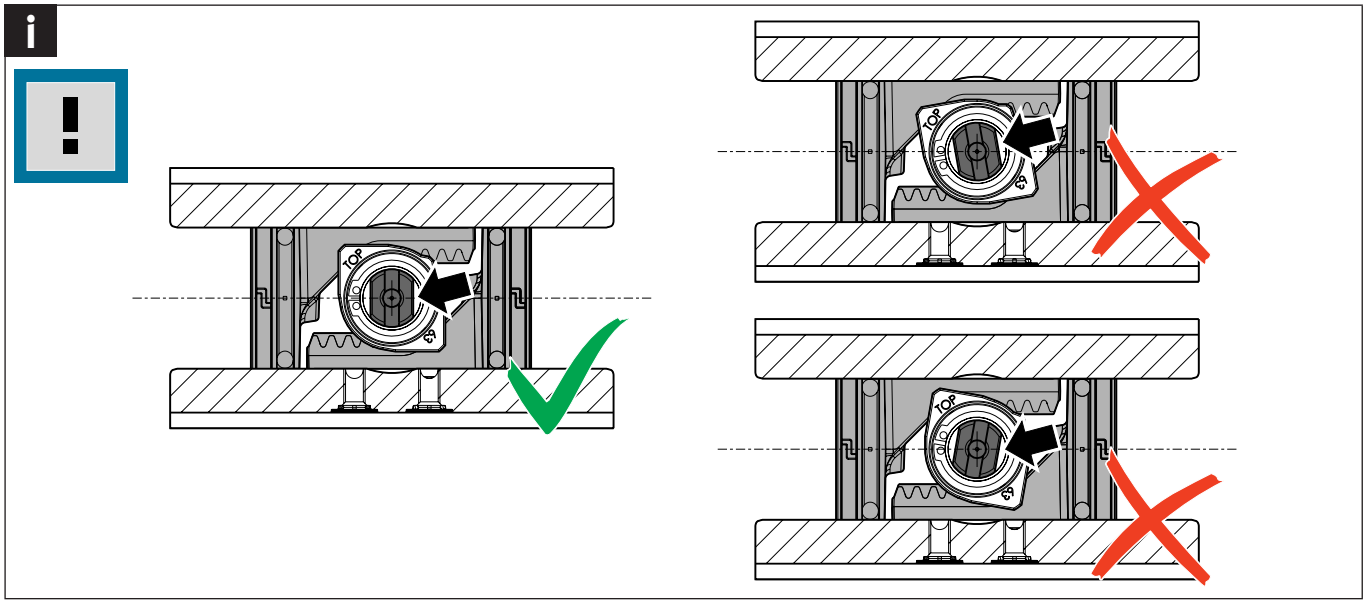
TOP
45°

16b

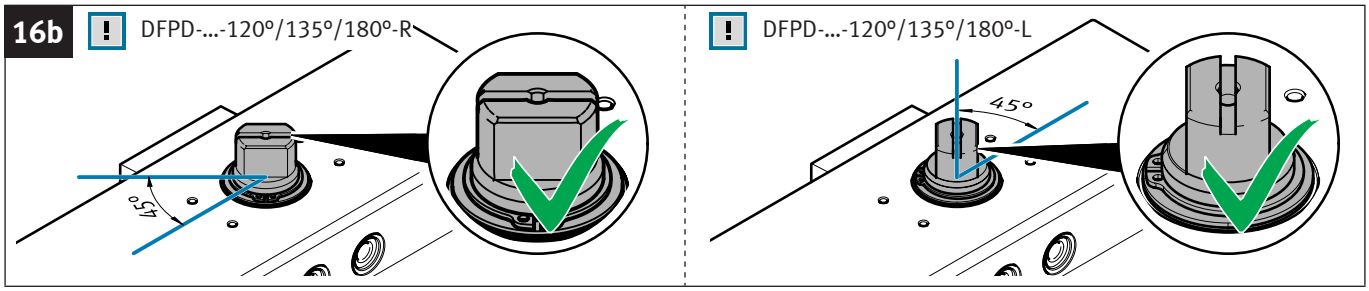
DFPD-...-120°/135°/180°-R
45°
DFPD-...-120°/135°/180°-L
45°

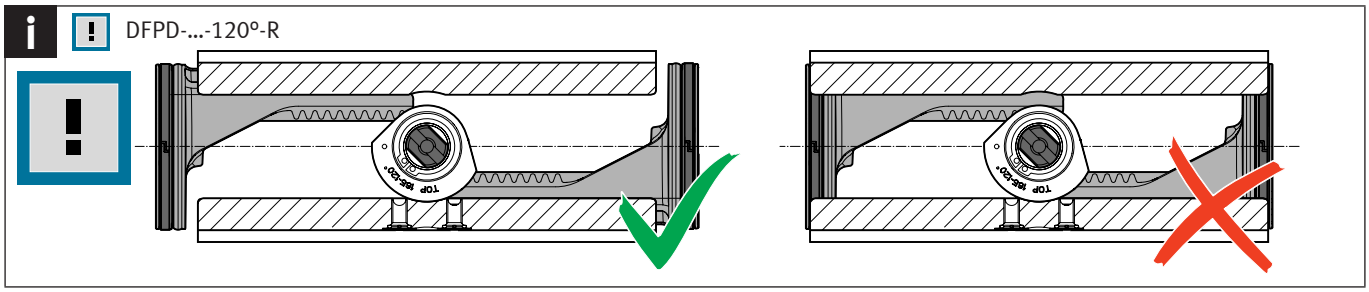
DFPD-...-120°-R

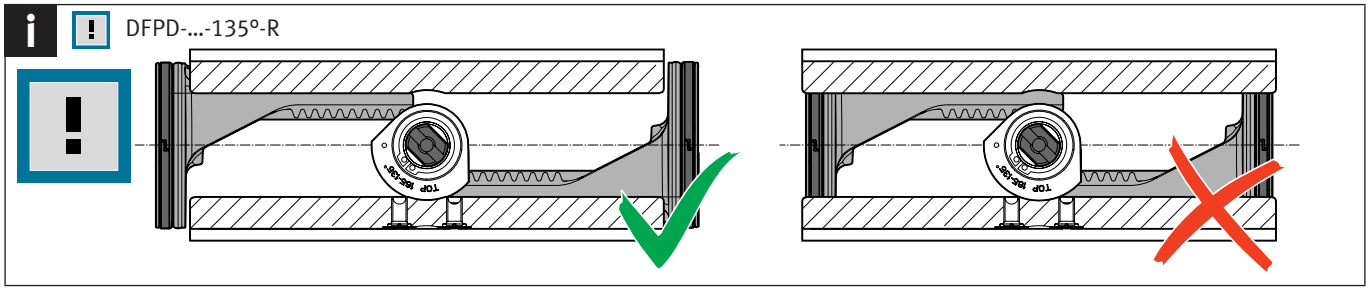
DFPD-...-135°-R

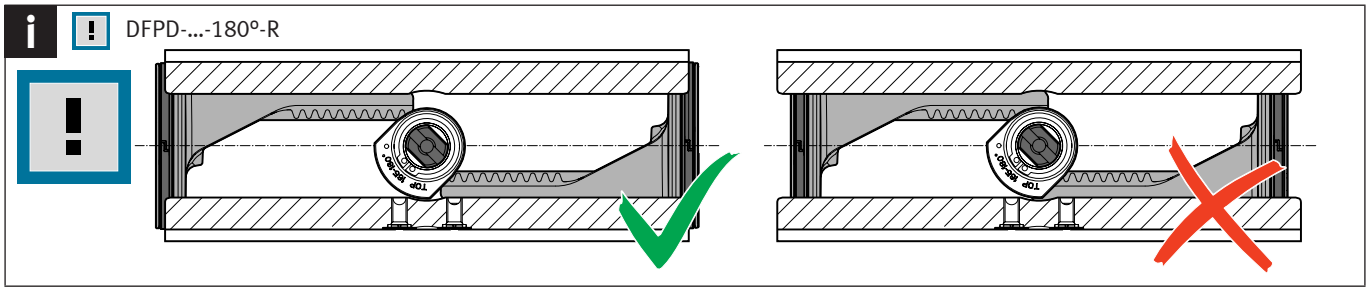
DFPD-...-180°-R

i DFPD-...-120°-L

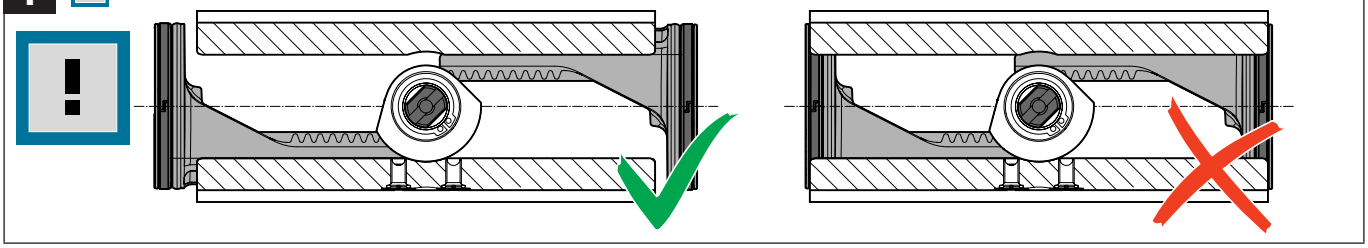

i DFPD-...-135°-L

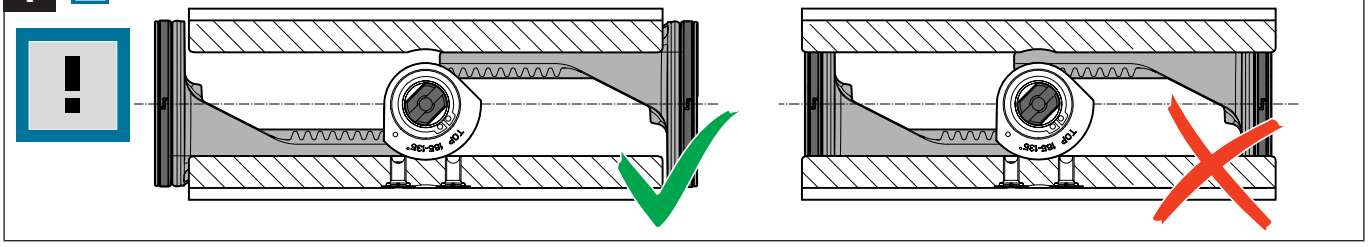

i DFPD-...-180°-L

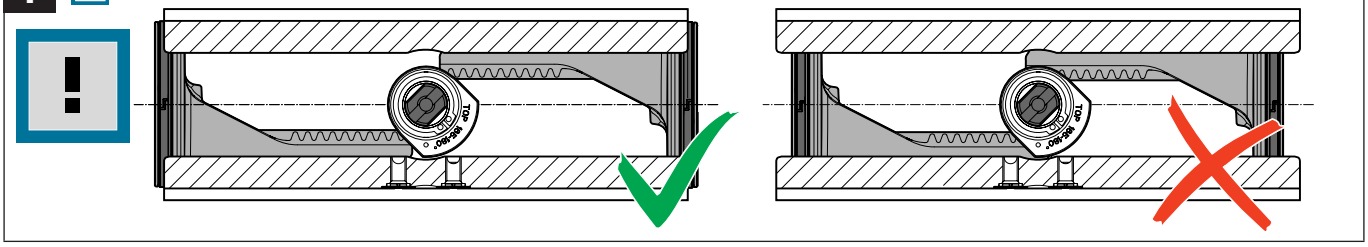

17b DFPD-...-120°/135°/180°-R

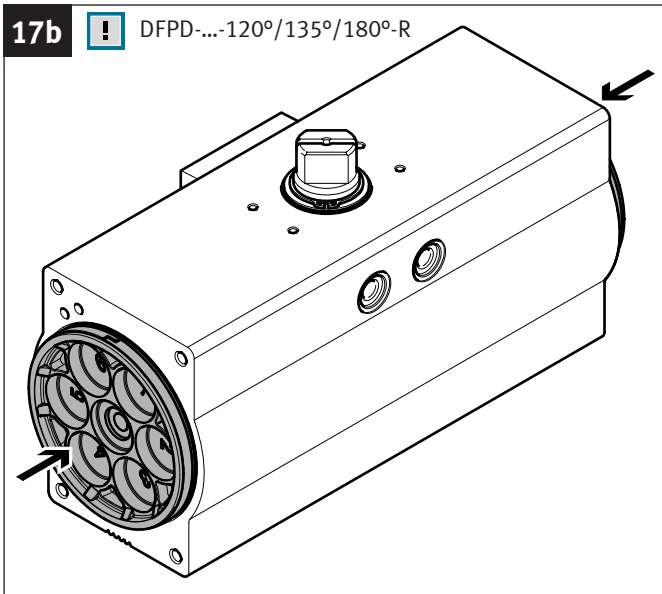

DFPD-...-120°/135°/180°-L

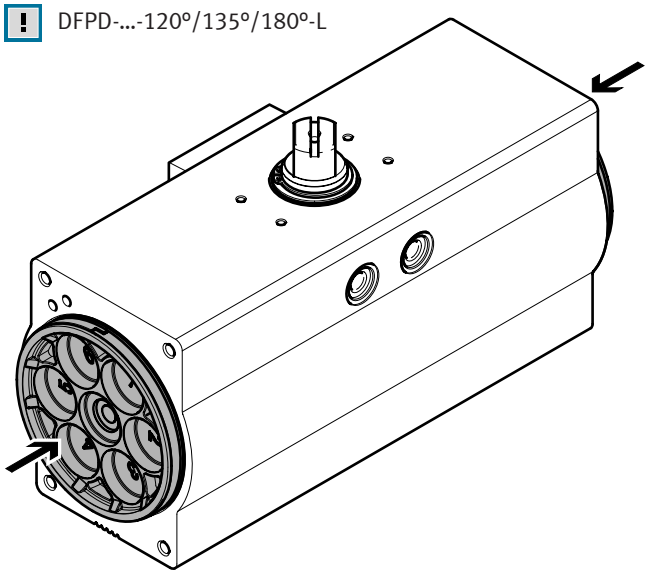

18a

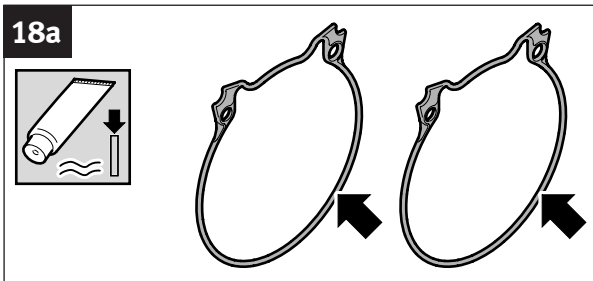

18b DFPD-700/900/1200/2300

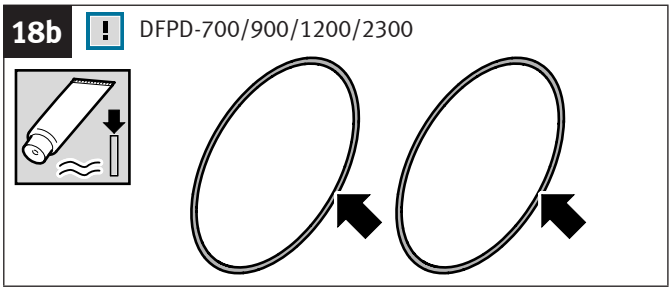

19a DFPD-...-S

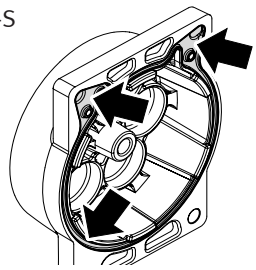

DFPD-...-D

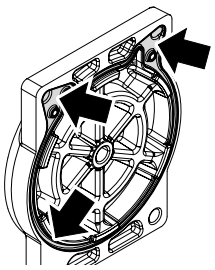

19b DFPD-700/900/1200/2300

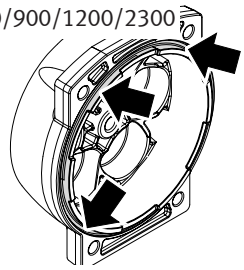

20a DFPD-...-S

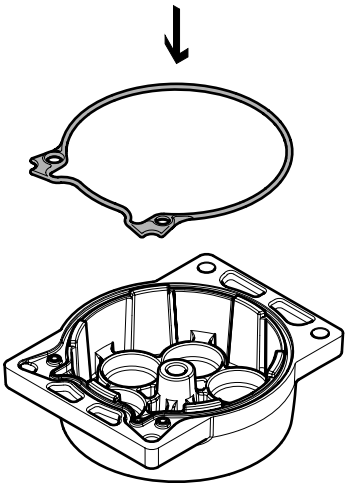

DFPD-...-D

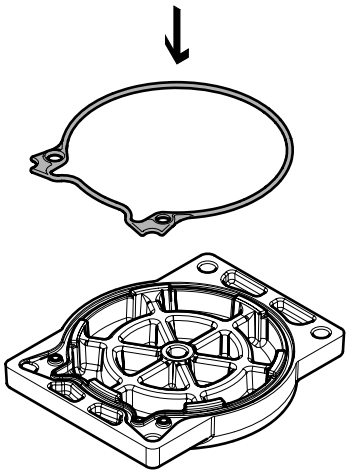

20b DFPD-700/900/1200/2300...-D+S

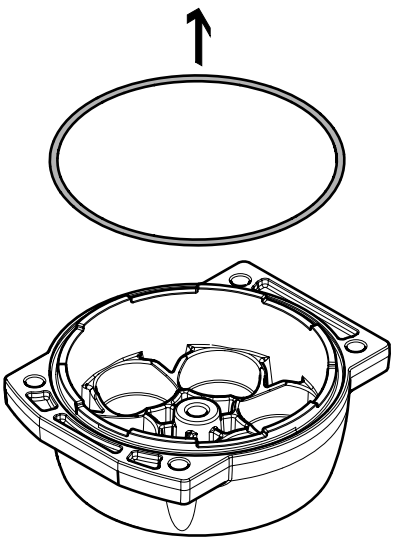

21a DFPD-...-S

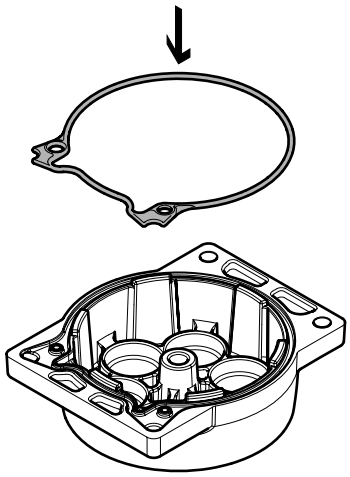

DFPD-...-D

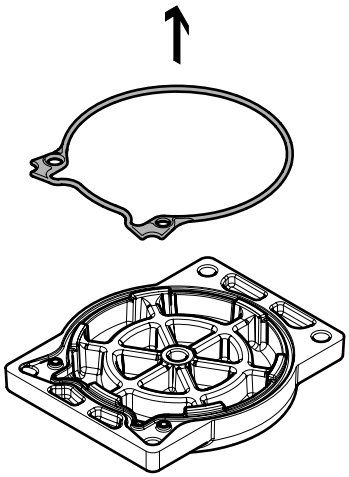

21b DFPD-700/900/1200/2300...-D+S

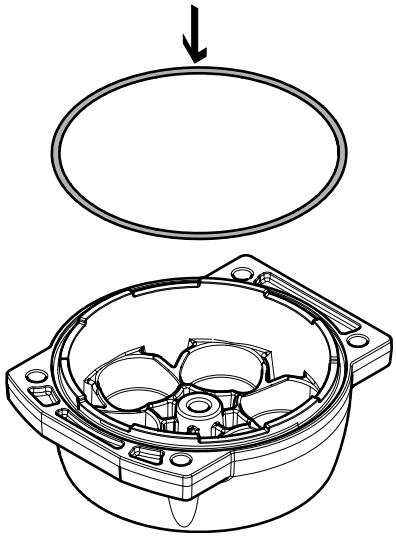

i

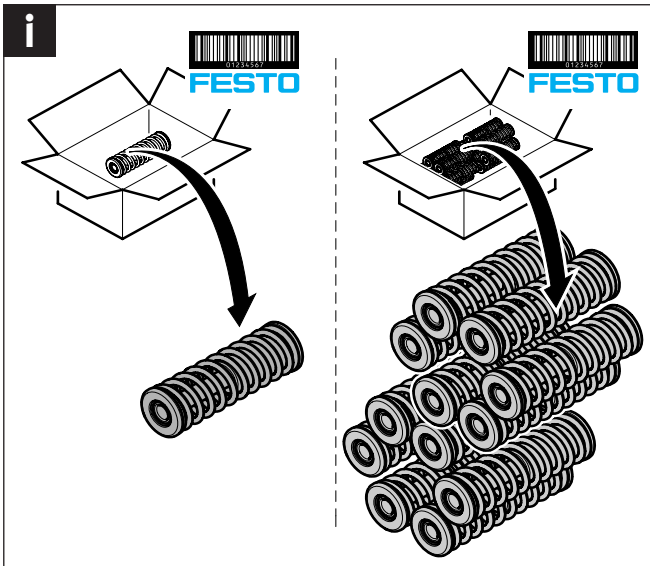

i

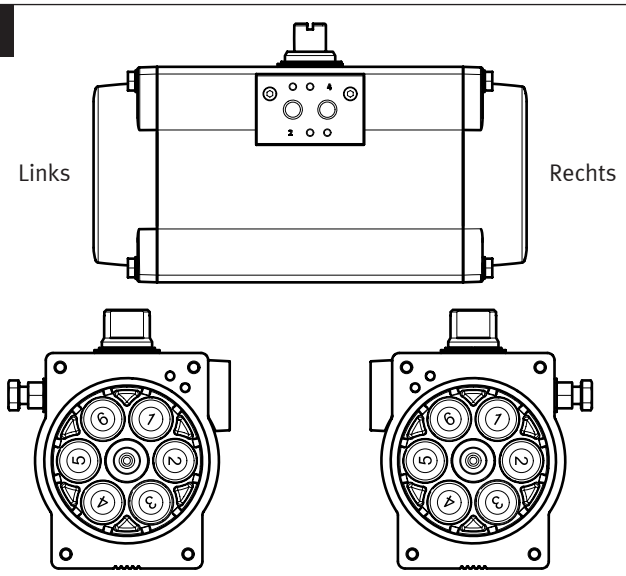

Type code	Positioning springs		Number of springs
	Left	Right	
20	2-5	2-5	4
25	2-5	2-4-6	5
30	2-4-6	2-4-6	6
35	2-4-6	1-3-4-6	7
40	1-3-4-6	1-3-4-6	8
45	1-3-4-6	1-3-4-5-6	9
50	1-3-4-5-6	1-3-4-5-6	10
55	1-3-4-5-6	1-2-3-4-5-6	11
60	1-2-3-4-5-6	1-2-3-4-5-6	12

22a

DFPD-...-S

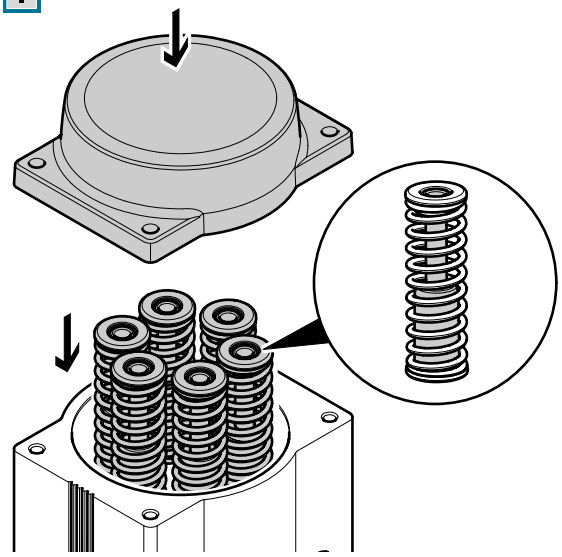

DFPD-...-D

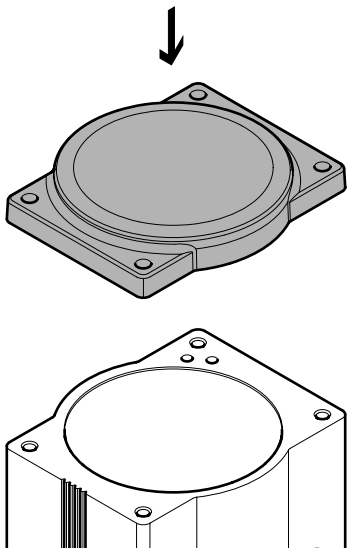

22b

DFPD-700/900/1200/2300...-S

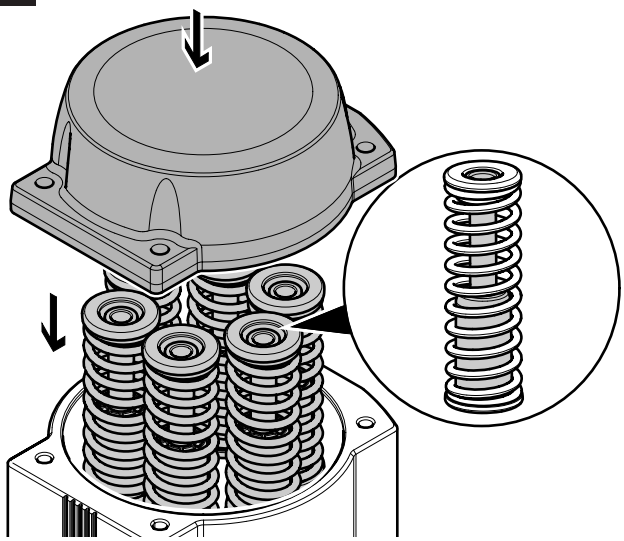

DFPD-700/900/1200/2300...-D

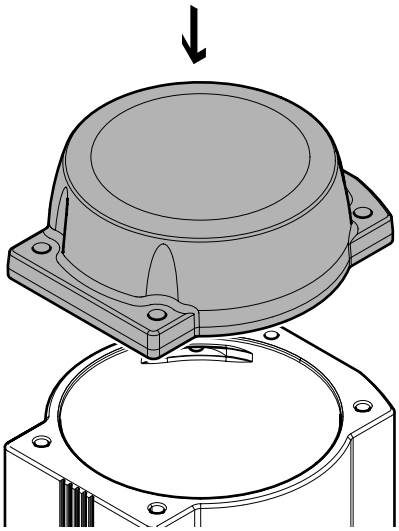

23a

DFPD-...-S

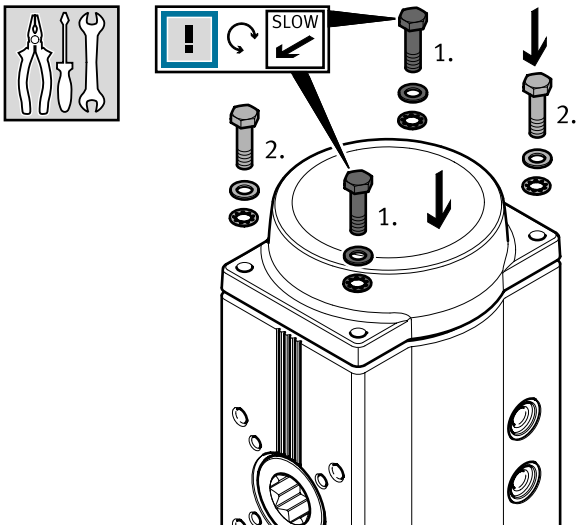

DFPD-...-D

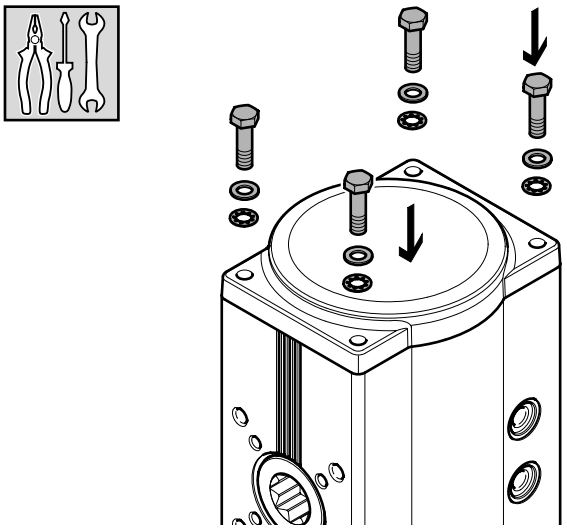

23b

DFPD-700/900/1200/2300...-S

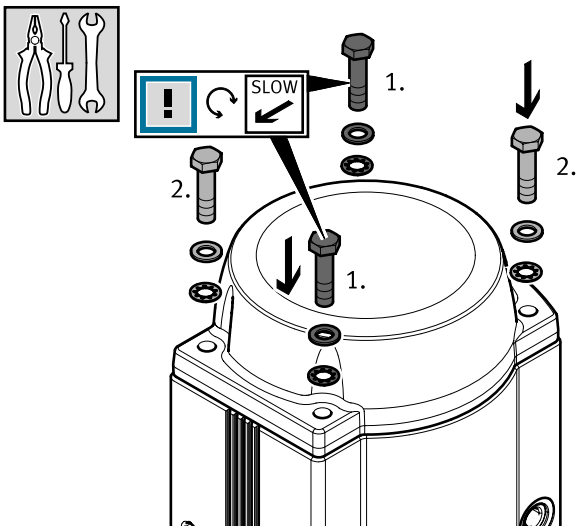

DFPD-700/900/1200/2300...-D

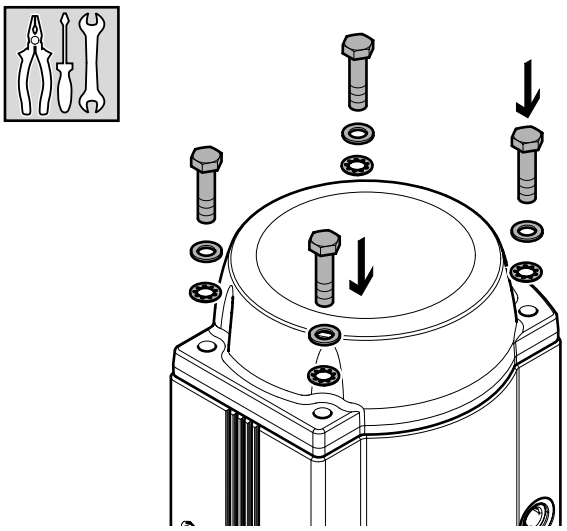

i

	Nm
DFPD-10	3–4 Nm
DFPD-20	3–4 Nm
DFPD-40	10–11 Nm
DFPD-80	10–11 Nm
DFPD-120	22–25 Nm
DFPD-160	22–25 Nm
DFPD-240	22–25 Nm
DFPD-300	38–43 Nm
DFPD-480	38–43 Nm
DFPD-700	38–43 Nm
DFPD-900	60–70 Nm
DFPD-1200	70–80 Nm
DFPD-2300	115–125 Nm

24

DFPD-...

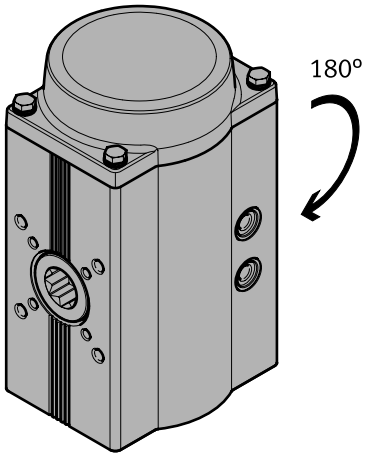

DFPD-700/900/1200/2300...

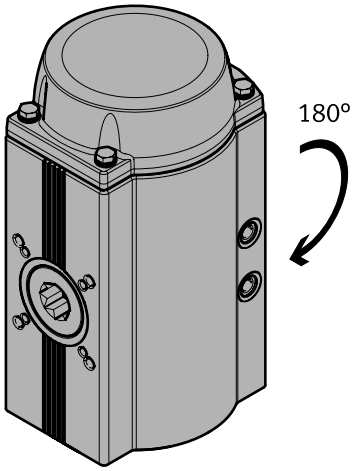

25a DFPD-...-S

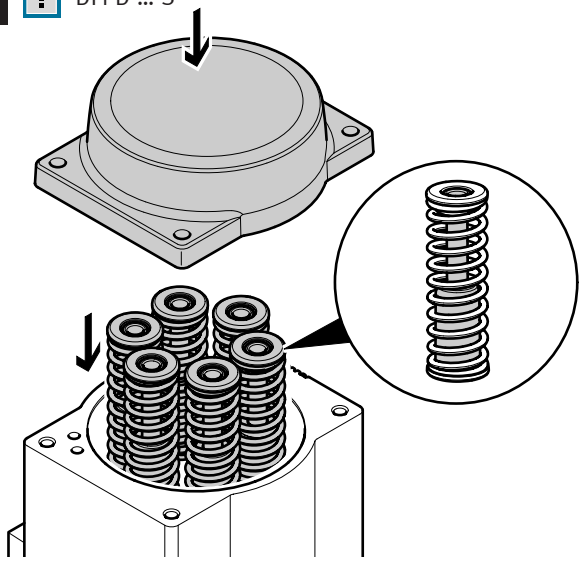

DFPD-...-D

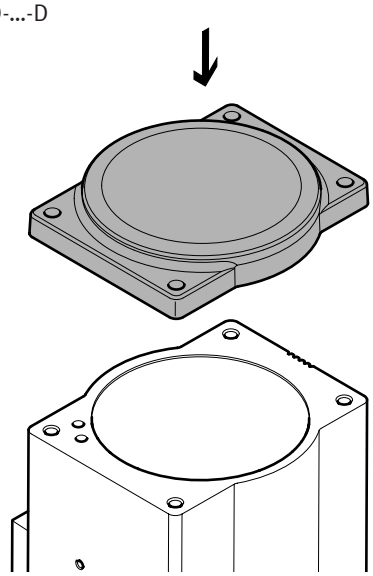

25b DFPD-700/900/1200/2300...-S

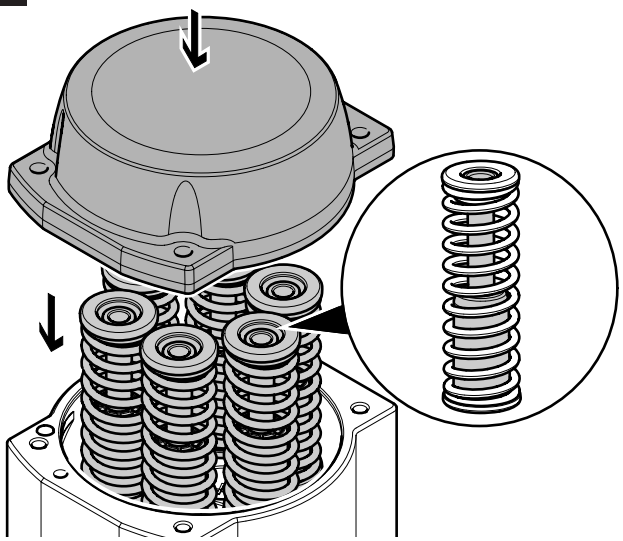

DFPD-700/900/1200/2300...-D

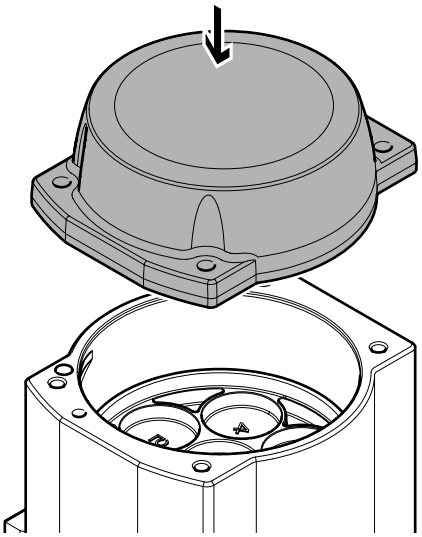

26a DFPD-...-S

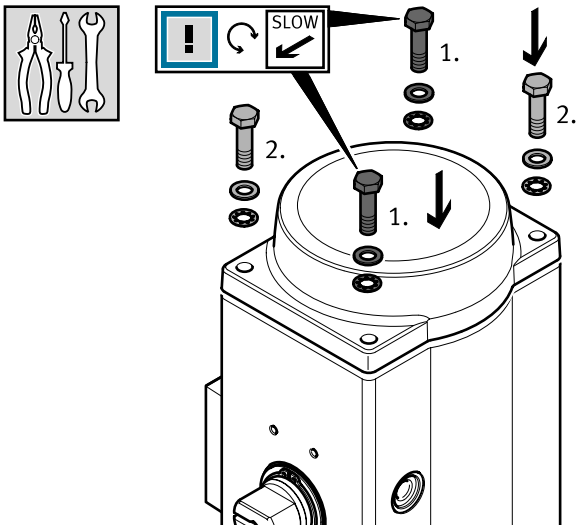

DFPD-...-D

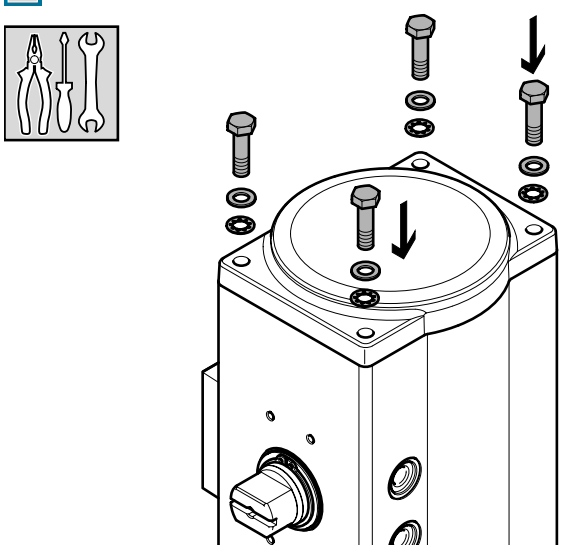

26b DFPD-700/900/1200/2300...-S

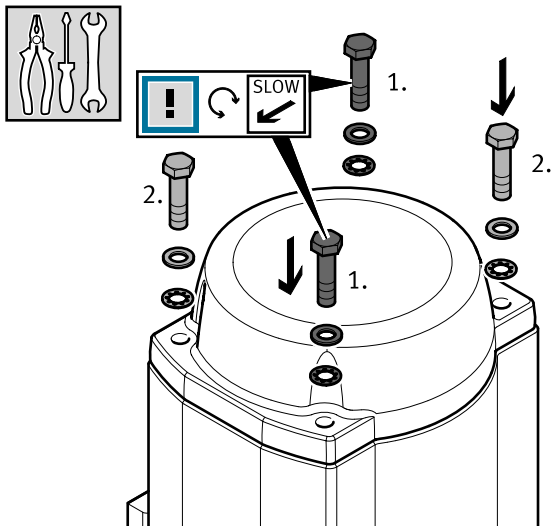

DFPD-700/900/1200/2300...-D

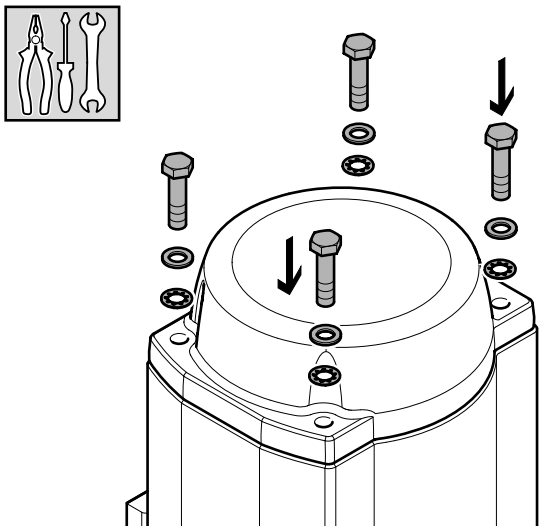

i

	Nm
DFPD-10	3–4 Nm
DFPD-20	3–4 Nm
DFPD-40	10–11 Nm
DFPD-80	10–11 Nm
DFPD-120	22–25 Nm
DFPD-160	22–25 Nm
DFPD-240	22–25 Nm
DFPD-300	38–43 Nm
DFPD-480	38–43 Nm
DFPD-700	38–43 Nm
DFPD-900	60–70 Nm
DFPD-1200	70–80 Nm
DFPD-2300	115–125 Nm

27

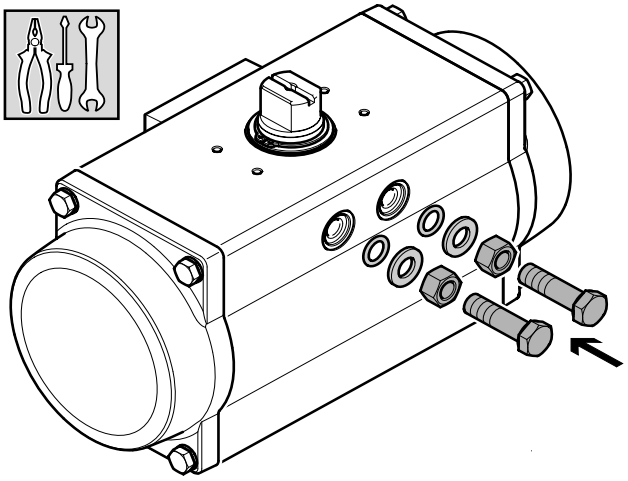

	Nm
DFPD-10	10–11 Nm
DFPD-20	10–11 Nm
DFPD-40	10–11 Nm
DFPD-80	22–25 Nm
DFPD-120	22–25 Nm
DFPD-160	38–43 Nm
DFPD-240	65–70 Nm
DFPD-300	65–70 Nm
DFPD-480	85–90 Nm
DFPD-700	85–90 Nm
DFPD-900	175–180 Nm
DFPD-1200	175–180 Nm
DFPD-2300	345–355 Nm

5 Start-up

1

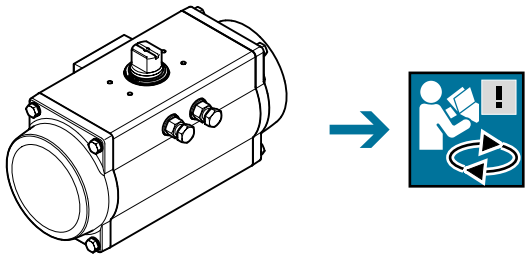

Description :
PRESSURE REGULATOR
0-87 PSI (6 BARS)
24VDC - INPUT 4 -20MA - OUTPUT PNP

Trade Name :
Festo

Model no :
VPPE-3-1-18-6-420-E1

VPPE-3-1-1/8-6-420-E1

Proportional pressure regulators VPPE

Proportional pressure regulators VPPE

Product range overview

Function	Version	Pneumatic connection	Nominal size for pressurisation/ exhaust [mm]	Pressure regulation range [bar]	Setpoint input		➔ Page/ Internet
					Voltage type 0 ... 10 V	Current type 4 ... 20 mA	
Proportional pressure regulator	**Without display**						
	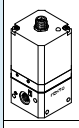	G1⁄8	5/2.5	0.15 ... 6	■	–	6
	With display						
	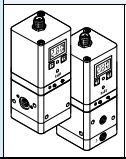	G1⁄8	5/2.5	0.02 ... 2	■	■	10
				0.06 ... 6			
				0.1 ... 10			

Proportional pressure regulators VPPE

Peripherals overview

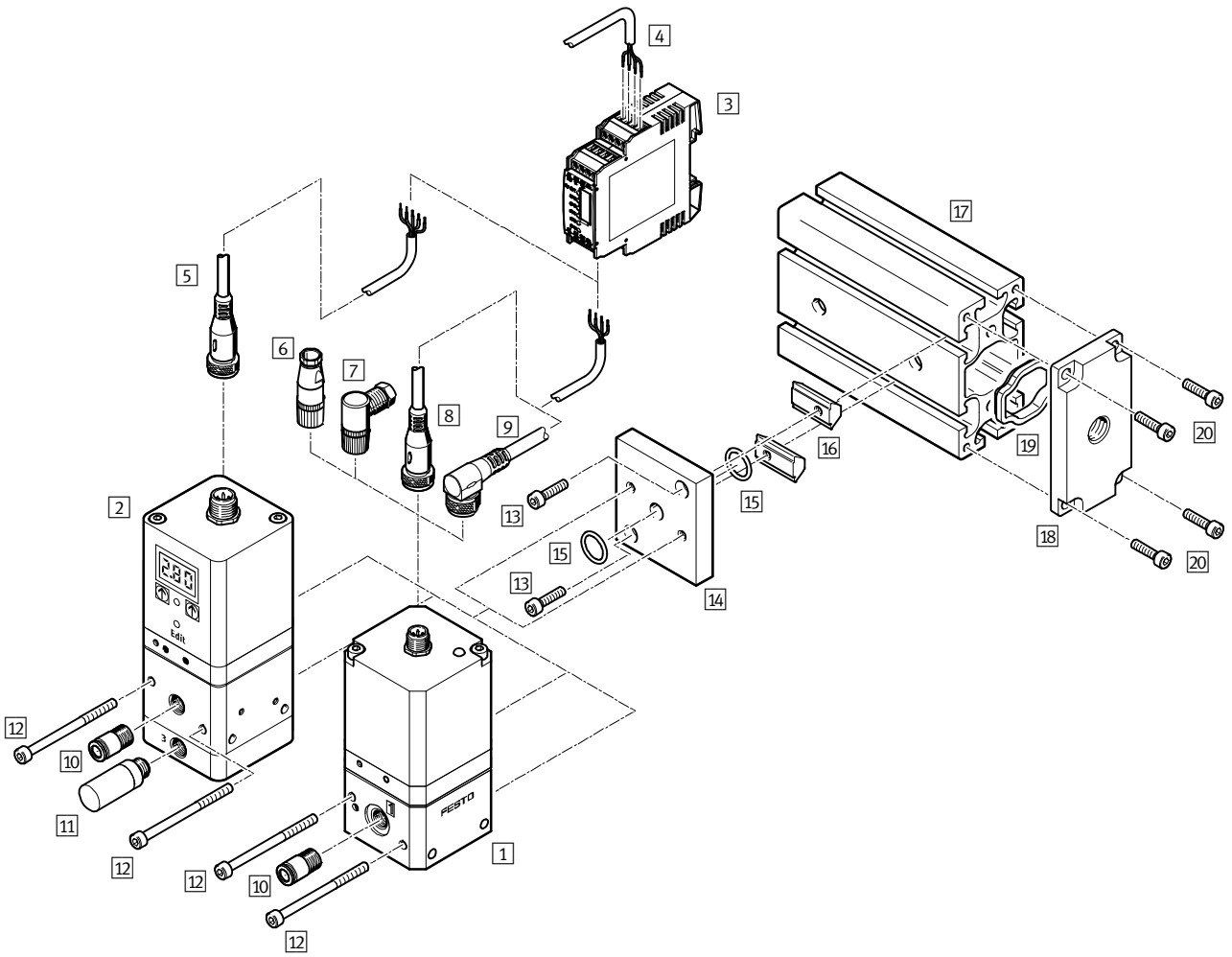

Accessories				
		Type	Brief description	➔ Page/Internet
1	Prop. pressure regulator	VPPE...	–	8
2	Prop. pressure regulator with display	VPPE ... E1	–	13
3	Setpoint module	MPZ	For generating 6+1 analogue voltage signals	8, 13
4	Digital input/output	–	For actuating the setpoint module	–
5	Connecting cable	SIM-M12-5GD-...-PU	With straight plug socket for actuating the VPPE...E1	13
6	Plug socket	SIE-GD	Straight plug socket for actuating the VPPE	8
7	Plug socket	SIE-WD-TR	Angled plug socket for actuating the VPPE	8
8	Connecting cable	SIM-M12-4GD-5PU	With straight plug socket for actuating the VPPE	8
9	Connecting cable	SIM-M12-4WD-5PU	With angled plug socket for actuating the VPPE	8
10	Push-in fitting	QS	For connecting compressed air tubing with standard O.D.	quick star
11	Silencer	U	For fitting in exhaust ports	u
12	Socket head screw M4x55	–	For screwing the VPPE to the mounting plate	15
13	Socket head screw M4x16	–	For screwing the mounting plate to the slot nut	15
14	Mounting plate (set)	VAME-P5-MK	For attaching the VPPE to the mounting rail (consists of mounting plate, slot nuts, screws and seals)	15
15	O-ring	–	For sealing	15
16	Slot nuts	–	For clamp fitting components on the mounting rail	15
17	Mounting rail	–	Standard mounting rail as central air supply	15
18	Compressed air supply plate (set)	VABF-P5-P3A3...	For supplying compressed air (consists of compressed air supply plate, screws and seal)	15
19	Seal	–	–	15
20	Socket head screw M5x12	–	For screwing a compressed air supply plate to the mounting rail	15

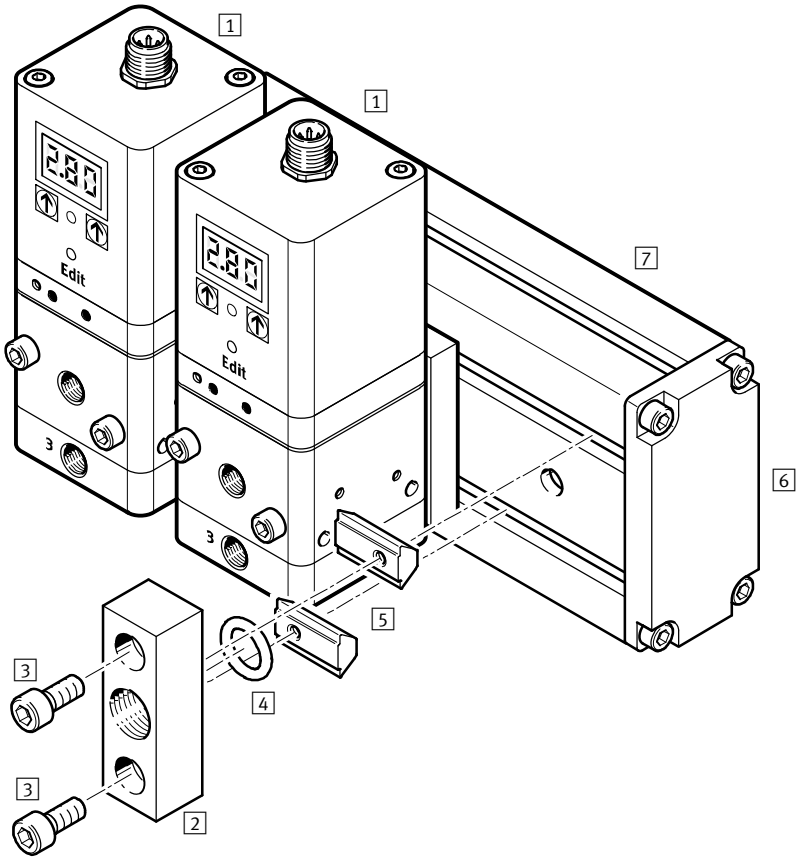

Accessories			
	Type	Brief description	→ Page/Internet
1 Prop. pressure regulator with display	VPPE ... E1	–	13
2 Additional power supply module (set)	VABF-P5-P1A3...	For supplying compressed air (consists of compressed air supply plate, screws and seal)	15
3 Socket head screw M6x20	–	For screwing a compressed air supply plate to the slot nut	15
4 O-ring	–	For sealing	15
5 Slot nuts	–	For clamp fitting components on the mounting rail	15
6 End plate (set)	VABE-P5-C	For sealing the mounting rail (consists of an end plate, screws and seal)	15
7 Mounting rail	IPM-PN-08-40x80-AL	Standard mounting rail as central air supply	15

Proportional pressure regulators VPPE with display

Type codes

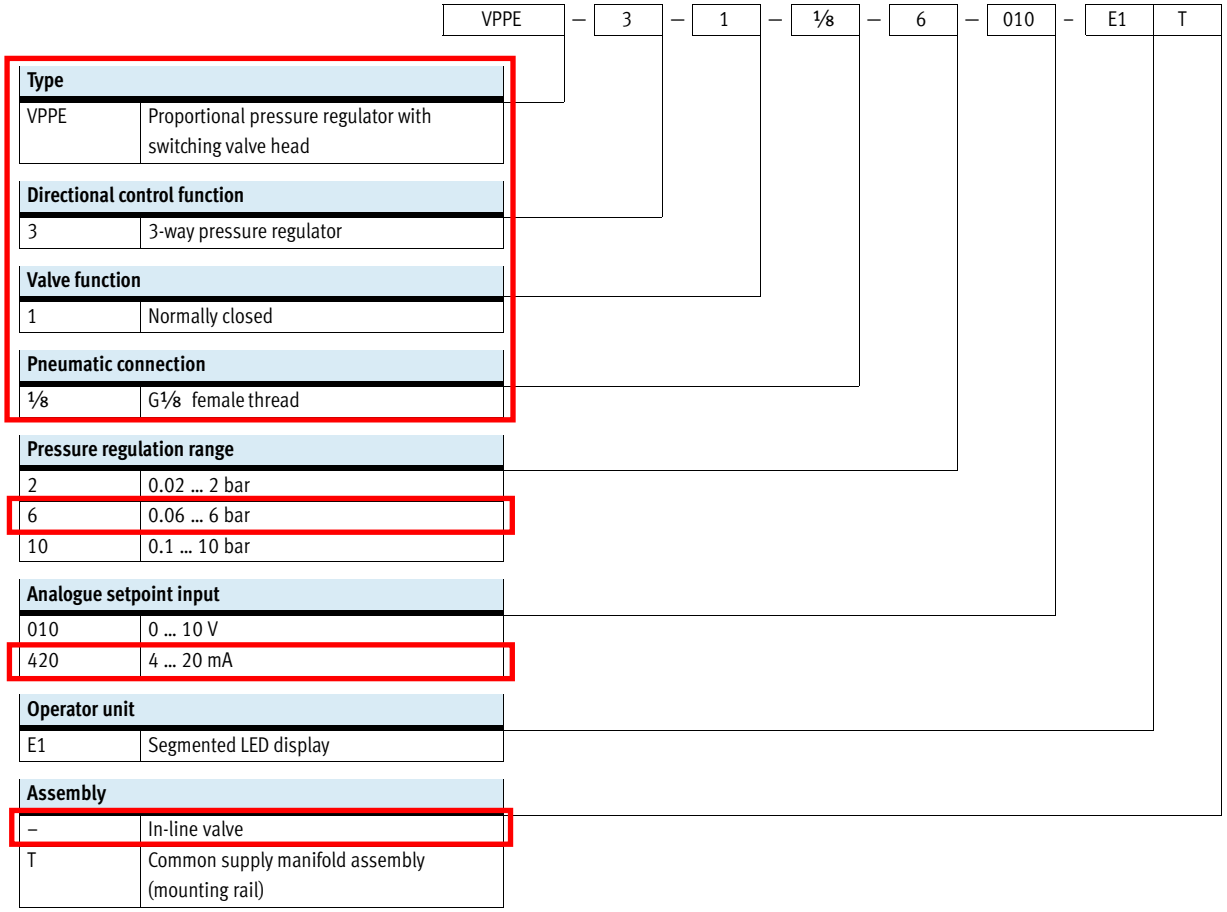

Type	
VPPE	Proportional pressure regulator with switching valve head

Directional control function	
3	3-way pressure regulator

Valve function	
1	Normally closed

Pneumatic connection	
⅛	G⅛ female thread

Pressure regulation range	
2	0.02 ... 2 bar
6	0.06 ... 6 bar
10	0.1 ... 10 bar

Analogue setpoint input	
010	0 ... 10 V
420	4 ... 20 mA

Operator unit	
E1	Segmented LED display

Assembly	
–	In-line valve
T	Common supply manifold assembly (mounting rail)

Proportional pressure regulators VPPE with display

Technical data

FESTO

- Flow rate
  310 ... 1,250 l/min
- Voltage
  21.6 ... 26.4 V DC
- Pressure regulation range
  0.02 ... 2 bar
  0.06 ... 6 bar
  0.1 ... 10 bar

Variants
- Setpoint input as analogue voltage signal 0 ... 10 V
- Setpoint input as analogue current signal 4 ... 20 mA
- Assembly as in-line valve or on mounting rail
- 3-digit LED display

General technical data			
Pneumatic connection 1, 2, 3			G1⁄8
Design, valve function			Piloted diaphragm regulator, 3-way proportional pressure regulator
Sealing principle			Soft
Actuation type			Electric
Reset method			Mechanical spring
Type of control			Piloted via 2/2-way valves
Type of mounting			Via through-hole
Mounting position			Any, preferably vertical
Nominal size	Pressurisation	[mm]	5
	Exhaust	[mm]	2.5
Standard nominal flow rate		[l/min]	➔ Graphs
Product weight		[g]	390

Flow rate qn as a function of output pressure p2

VPPE- ... -2- ...

qn 1 ⟶ 2

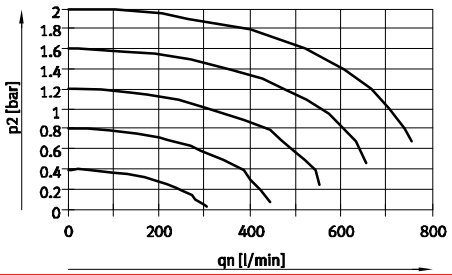

qn 2 ⟶ 3

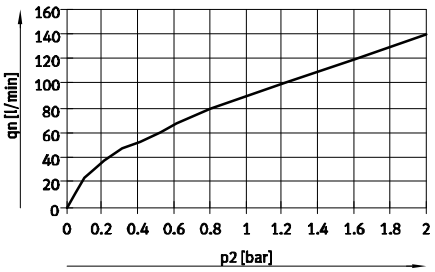

VPPE- ... -6- ...

qn 1 ⟶ 2

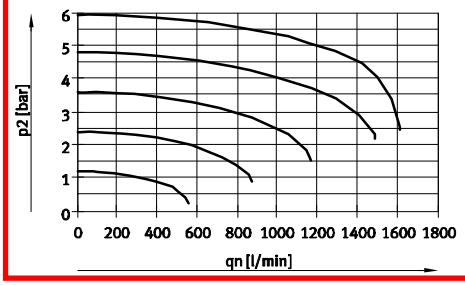

qn 2 ⟶ 3

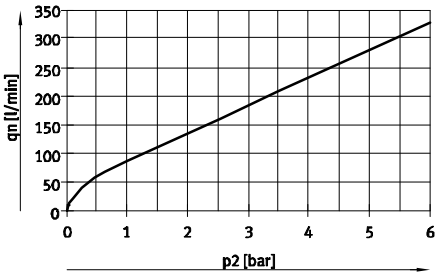

VPPE- ... -10- ...

qn 1 ⟶ 2

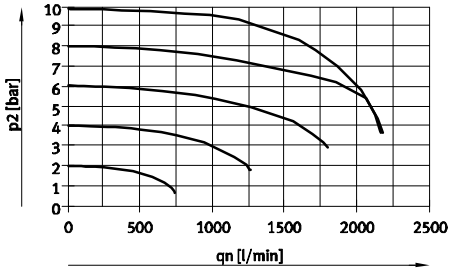

qn 2 ⟶ 3

Electrical data			
Electrical connection			Plug, round design, 5-pin, M12x1
Operating voltage range		[V DC]	21.6 … 26.4
Power supply indicator			LED
Residual ripple		[%]	10
Max. electrical power consumption		[W]	4.2
Analogue signal range	Voltage	[V DC]	0 … 10
Output/input	Current	[mA]	4 … 20
Protection against short circuit			For all electrical connections
Switching output			PNP
Protection against incorrect polarity			For all electrical connections
Protection class			IP65

Operating and environmental conditions				
Pressure regulation range	[bar]	0.02 … 2	0.06 … 6	0.1 … 10
Operating medium		Compressed air according to ISO 8573-1:2010 [7:4:4]		
		Inert gases		
Note on operating/pilot medium		Lubricated operation not possible		
Supply pressure 1[1)]	[bar]	3 … 4	6 … 8	6 … 11
Max. pressure hysteresis	[mbar]	20	30	50
FS (full scale) linearity error	[%]	± 1		
FS (full scale) repetition accuracy	[%]	0.5		
Temperature coefficient	[%/K]	0.04		
Duty cycle	[%]	100		
Ambient temperature	[°C]	0 … 60		
Temperature of medium	[°C]	10 … 50		
Corrosion resistance class	[CRC]	2[2)]		
CE marking (see declaration of conformity)		To EU EMC Directive[3)]		

1) Supply pressure 1 should always be 1 bar greater than the maximum regulated output pressure.
2) Corrosion resistance class 2 according to Festo standard 940 070
Components subject to moderate corrosion stress. Externally visible parts with primarily decorative surface requirements which are in direct contact with a normal industrial environment or media such as coolants or lubricating agents.
3) For information about the applicability of the component see the manufacturer's EC declaration of conformity at: www.festo.com/sp ➔ User documentation.
If the component is subject to restrictions on usage in residential, office or commercial environments or small businesses, further measures to reduce the emitted interference may be necessary.

Pin allocation for VPPE with display, M12x1

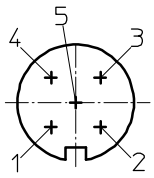

1 Supply 21.6 … 26.4 V DC
2 Setpoint value (–)
3 GND (–)
4 Setpoint value (+) 0 … 10 V DC / 4 … 20 mA
5 Actual value output or switching output (can be chosen via the control panel)

Circuit symbol

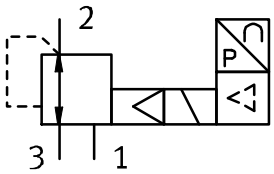

Materials	
Housing	Anodised wrought aluminium alloy
Note on materials	RoHS-compliant

- Note

Output pressure remains unregulated if the power supply cable is interrupted.

Proportional pressure regulators VPPE with display

Technical data

Dimensions Download CAD data ➔ **www.festo.com**

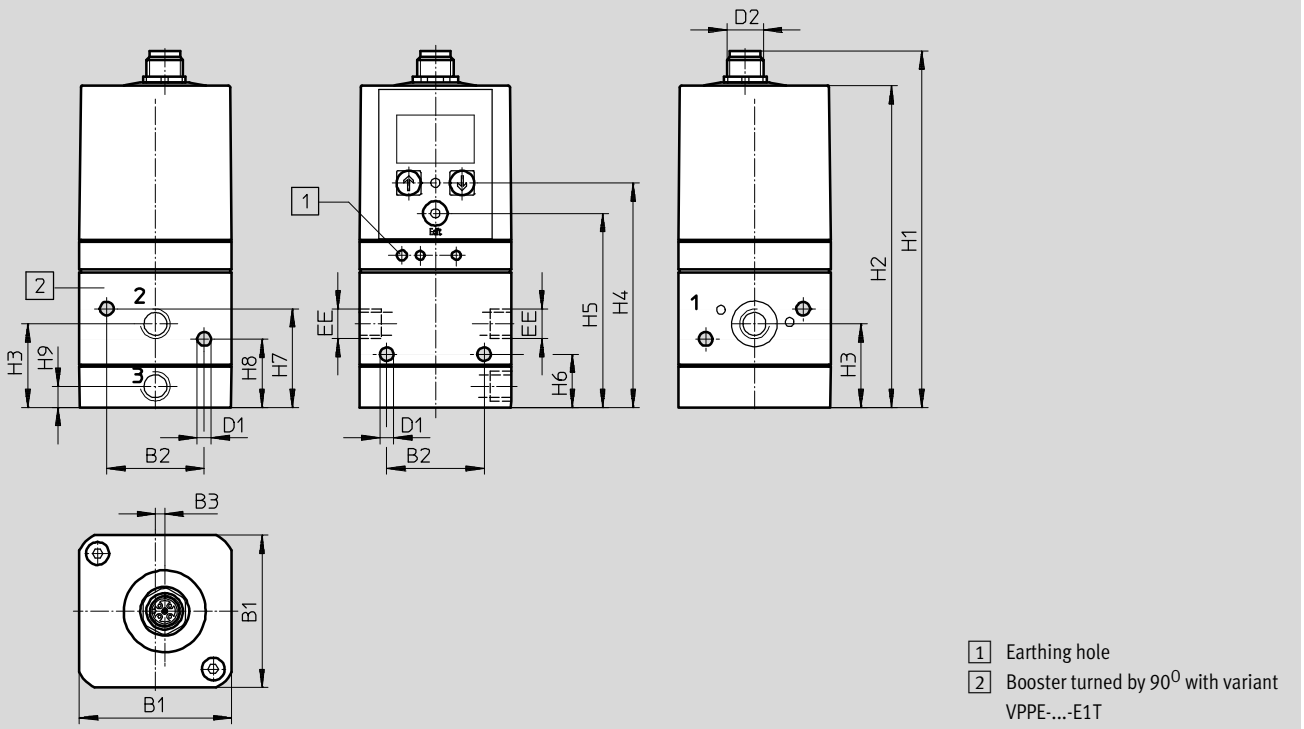

1 Earthing hole
2 Booster turned by 90° with variant VPPE-...-E1T

Type	B1	B2	B3	⌀ D1	D2	EE	H1	H2	H3	H4	H5	H6	H7	H8	H9
VPPE-3-1⁄8- ... E1 ...	50	32	3.1	4.5	M12x1	G1⁄8	117.2	105.8	27.5	73.8	63.8	17.5	32.5	22.5	7

Proportional pressure regulators VPPE with display

Ordering data

Ordering data				
	Description		Part No.	Type
Proportional pressure regulator VPPE with display				
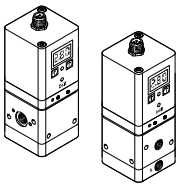	Voltage type 0 ... 10 V			
	Pressure regulation range 0.02 ... 2 bar		**557771**	**VPPE-3-1-1/8-2-010-E1**
			557777	**VPPE-3-1-1/8-2-010-E1T**
	Pressure regulation range 0.06 ... 6 bar		**557772**	**VPPE-3-1-1/8-6-010-E1**
			567539	**VPPE-3-1-1/8-6-010-E1T**
	Pressure regulation range 0.1 ... 10 bar		**557773**	**VPPE-3-1-1/8-10-010-E1**
			557778	**VPPE-3-1-1/8-10-010-E1T**
	Current type 4 ... 20 mA			
	Pressure regulation range 0.02 ... 2 bar		**557774**	**VPPE-3-1-1/8-2-420-E1**
			557779	**VPPE-3-1-1/8-2-420-E1T**
	Pressure regulation range 0.06 ... 6 bar		**557775**	**VPPE-3-1-1/8-6-420-E1**
			567540	**VPPE-3-1-1/8-6-420-E1T**
	Pressure regulation range 0.1 ... 10 bar		**557776**	**VPPE-3-1-1/8-10-420-E1**
			557780	**VPPE-3-1-1/8-10-420-E1T**
Connecting cable				Technical data ➔ Internet: nebu
	• Straight socket, M12x1, 5-pin • Open end, 5-wire	2.5 m	**175715**	**SIM-M12-5GD-2,5-PU**
		5 m	**175716**	**SIM-M12-5GD-5-PU**
Setpoint module				Technical data ➔ Internet: mpz
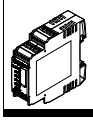	Setpoint module for generating 6 + 1 analogue voltage signals		**546224**	**MPZ-1-24DC-SGH-6-SW**

Mounting rail for proportional pressure regulators VPPE

Technical data

General

Design

Some selected types of the pressure regulator VPPE can be screwed to a mounting rail. This has the advantage that the mounting rail can be used to create a central compressed air supply.
The air can be fed into the mounting rail:

- at one end or
- at both ends through end plates,
- using an intermediate air supply module (in applications where an increased air rate is required).

The holes for the mounting rail must be drilled according to the assembly instructions. The pressure regulators VPPE are screwed to the mounting rail using the mounting plate. The end plates are screwed to the left and right end faces of the mounting rail. See the assembly instructions for further information:
➔ Internet: vppe

Compressed air supply on the mounting rail

When using the mounting rail as a central compressed air supply, make sure that the required compressed air supply is guaranteed. Bear in mind that an intermediate air supply module needs a valve position. The intermediate air supply module takes up one VPPE valve position.

Recommendation for compressed air supply

E.g. with tubing Ø 16 mm with simultaneous max. flow rate for all valves, the following applies:
Compressed air supply – number of valves:

- At one end – max. 5 valves
- At both ends – max. 10 valves
- With intermediate air supply module – max. 5 valves per module

Note

- Intermediate air supply modules must always be centred on the mounting rail.
- Multiple intermediate air supply modules must be evenly distributed.

Note

Only the following types of proportional pressure regulators VPPE can be mounted on mounting rails using a mounting plate:

- Valve VPPE with LED display, VPPE-3-⅛-6-010
- Valve VPPE with display and top part rotated by 90°
  VPPE- ... –E1T

Further information on mounting proportional pressure regulators VPPE as well as intermediate air supply modules on mounting rails can be found in the assembly instructions:
➔ Internet: vppe

Mounting plate (set) materials		
Plate		Wrought aluminium alloy
Seals		Nitrile rubber
Screws		Steel
Note on materials		RoHS-compliant
Corrosion resistance class	[CRC]	2[1)]

1) Corrosion resistance class 2 according to Festo standard 940 070
Components subject to moderate corrosion stress. Externally visible parts with primarily decorative surface requirements which are in direct contact with a normal industrial environment or media such as coolants or lubricating agents.

Dimensions – Mounting plate Download CAD data ➔ **www.festo.com**

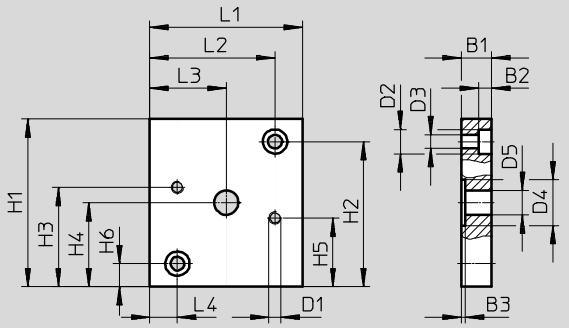

Type	B1	B2	B3	D1	⌀ D2	⌀ D3	⌀ D4	⌀ D5	H1	H2	H3	H4	H5	H6	L1	L2	L3	L4
VAME-P5-MK	10	4.6	1.3	M4	8	4.5	15	8	55	47.5	32.5	27.5	22.5	7.5	50	41	25	9

Mounting rail for proportional pressure regulators VPPE

Ordering data

Ordering data			
	Description	Part No.	Type
Mounting plate set			
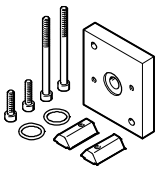	Set, consisting of: • 1x mounting plate, weight: 110 g • 2x socket head screws M4X55 • 2x socket head screws M4X16 • 2x slot nuts • 2x O-rings	**570966**	**VAME-P5-MK**
Profile column (mounting rail)			
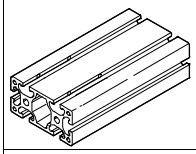	Made from aluminium, as central air supply, length: individually adaptable	**175964**	**HMBS-80/40- -**
End plate set (closed)			
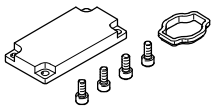	For sealing the mounting rail, consisting of: • 1x plate • 1x seal • 4x socket head screws M5x12	**8021858**	**VABE-P5-C**
Compressed air supply plate set			
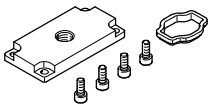	With connecting thread G¼, consisting of: • 1x plate with connecting thread G¼ • 1x seal • 4x socket head screws M5x12	**8021859**	**VABF-P5-P3A3-G14**
	With connecting thread G⅜, consisting of: • 1x plate with connecting thread G⅜ • 1x seal • 4x socket head screws M5x12	**8021860**	**VABF-P5-P3A3-G38**
	With connecting thread G½, consisting of: • 1x plate with connecting thread G½ • 1x seal • 4x socket head screws M5x12	**8021861**	**VABF-P5-P3A3-G12**
Additional power supply module set			
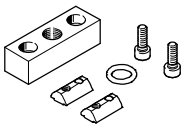	Connection G¼, consisting of: • 1x plate with connecting thread G¼ • 1x O-ring • 2x slot nuts • 2x socket head screws M6x20	**8021862**	**VABF-P5-P1A3-G14**
	Connection G⅜, consisting of: • 1x plate with connecting thread G⅜ • 1x O-ring • 2x slot nuts • 2x socket head screws M6x20	**8021863**	**VABF-P5-P1A3-G38**

Description :
VALVES TERMINALS
24VDC, 25PIN DSUB, 1/4 PORTS, K(2) + M(1) MODULES

Trade Name :
Festo

Model no :
34P-MS1-SGUGKLGAL-3AU-KKM+HDD

Overview selected features Valve terminal MPA-L
34P-MS1-SGUGKLGAL-3AU-KKM+HDD
#569926

Basic configuration	
Feature	**Value**
Valve Terminal, pneumatic part	34P MPA-L Modular sub-base valves
Electrical connection	MS1 Multi-pin, Sub-D, 25-pin, 24 addresses, IP 40
Pressure supply connection	SG Thread G 1/4
Exhaust port	UG Thread G 1/4
Right-hand end plate	without supply ports 1, 3/5
Pilot air	Internal
Port 82/84 on right end plate	KLG 1/4", straight
Standard connection, 10 mm valve size	AL Push-in fitting 1/4"
Standard connection, 14 mm valve size	Push-in fitting 8 mm
Standard connection, 20 mm valve size	Push-in fitting 10 mm
Connection direction	Straight
Vertical pressure shut-off plates, global	Without
Manual override *	push-in/detenting
Clamp strap at working ports	Assembly direction from top
User's documentation	Without
Installation instructions	Without

Module 1	
Feature	**Value**
Type of module block	A Manifold block, 10 mm, 2 addresses

Module 2	
Feature	**Value**
Type of module block	A Manifold block, 10 mm, 2 addresses

Module 3	
Feature	**Value**
Type of module block	A Manifold block, 10 mm, 2 addresses

Module 4	
Feature	**Value**
Type of module block	U Compressed air supply port 1. Ports 3/5 combined

Position function 1	
Feature	**Value**
Position function	K 2x3/2-way valve, normally closed

Position function 2	
Feature	**Value**
Position function	K 2x3/2-way valve, normally closed

Position function 3	
Feature	**Value**
Position function	M 5/2-way valve, single solenoid

Accessories for electrical connection technology	
Feature	**Value**
GL - cover cap for AIDA push-pull connection *	Without

Accessories Pneumatic	
Feature	**Value**
Mounting accessories	H H-rail mounting
Connecting cable	DD Sub-D 25-pin, IP 40, 2.5 m

Feature	**Value**
Total of bit-oriented digital inputs	0
Total of word-oriented digital inputs	0
Total of configured digital inputs	0
Sum word-bit oriented DE	0
Total of bit-oriented digital outputs	0
Total of word-oriented digital outputs	0
Total of configured digital outputs	0
Total parameters	0

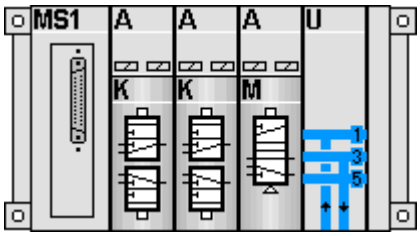

End plate
VMPAL-EPL-SD25-IP40

Part number: 560940

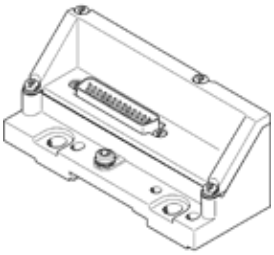

Data sheet

Feature	values
Operating pressure	-0.9 ... 10 bar
Pilot pressure	3 ... 8 bar
Corrosion resistance classification CRC	3
Ambient temperature	-5 ... 50 °C
Materials note	Conforms to RoHS

Solenoid valve
VMPA1-M1H-K-PI

Part number: 533347

FESTO

For valve terminal MPA-S.

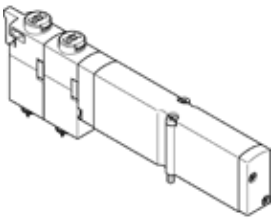

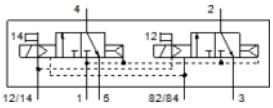

Data sheet

Feature	values
Valve function	2x3/2 closed, monostable
Type of actuation	electrical
Valve size	10 mm
Standard nominal flow rate	230 l/min
Operating pressure	3 ... 10 bar
Design structure	Piston slide
Type of reset	Air spring
Protection class	to IEC 60529 IP65
Authorisation	c UL us - Recognized (OL)
Sealing principle	soft
Assembly position	Any
Manual override	detenting Pushing
Type of piloting	Piloted
Flow direction	non reversible
Freedom from overlap	Yes
Note on forced dynamisation	Switching frequency at least once a week
Switching position indicator	Yes
Pilot pressure	3 ... 8 bar
Suitability for vacuum	No
Standard nominal flow rate with QS-6	230 l/min
Switching time off	20 ms
Switching time on	10 ms
Max. positive test pulse with logic 0	400 µs
Max. negative test pulse with logic 1	200 µs
Permissible voltage fluctuation	+/- 25 %
Operating medium	Compressed air in accordance with ISO8573-1:2010 [7:4:4]
Note on operating and pilot medium	Lubricated operation possible (subsequently required for further operation)
Vibration resistance	Transport application test at severity level 2 in accordance with FN 942017-4 and EN 60068-2-6
Shock resistance	Shock test SG2 to FN/EN
Corrosion resistance classification CRC	1
Storage temperature	-20 ... 40 °C
Medium temperature	-5 ... 50 °C
Ambient temperature	-5 ... 50 °C
Max. tightening torque, valve mounting	0.25 Nm
Product weight	56 g
Mounting type	with through hole
Materials note	Conforms to RoHS
Materials information for seals	NBR
Materials information, housing	Aluminium die cast

Solenoid valve
VMPA1-M1H-M-PI

Part number: 533342

FESTO

For valve terminal MPA-S.

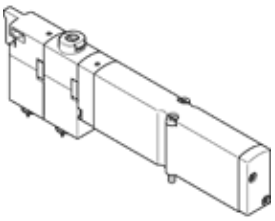

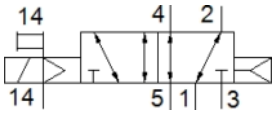

Data sheet

Feature	values
Valve function	5/2 monostable
Type of actuation	electrical
Valve size	10 mm
Standard nominal flow rate	360 l/min
Operating pressure	-0.9 ... 10 bar
Design structure	Piston slide
Type of reset	Air spring
Protection class	IP65 to IEC 60529
Authorisation	c UL us - Recognized (OL)
Sealing principle	soft
Assembly position	Any
Manual override	detenting Pushing
Type of piloting	Piloted
Flow direction	reversible
Freedom from overlap	Yes
Note on forced dynamisation	Switching frequency at least once a week
Switching position indicator	Yes
Pilot pressure	3 ... 8 bar
Suitability for vacuum	Yes
Standard nominal flow rate with QS-6	360 l/min
Switching time off	20 ms
Switching time on	10 ms
Max. positive test pulse with logic 0	400 µs
Max. negative test pulse with logic 1	200 µs
Permissible voltage fluctuation	+/- 25 %
Operating medium	Compressed air in accordance with ISO8573-1:2010 [7:4:4]
Note on operating and pilot medium	Lubricated operation possible (subsequently required for further operation)
Vibration resistance	Transport application test at severity level 2 in accordance with FN 942017-4 and EN 60068-2-6
Shock resistance	Shock test SG2 to FN/EN
Corrosion resistance classification CRC	1
Storage temperature	-20 ... 40 °C
Medium temperature	-5 ... 50 °C
Ambient temperature	-5 ... 50 °C
Max. tightening torque, valve mounting	0.25 Nm
Product weight	49 g
Mounting type	with through hole
Materials note	Conforms to RoHS
Materials information for seals	NBR
Materials information, housing	Aluminium die cast

Sub-base
VMPAL-AP-10-QS1/4"-1

Part number: 560999

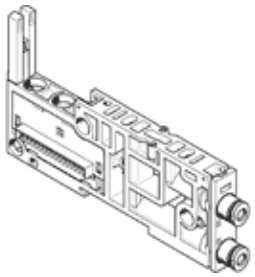

Data sheet

Feature	values
Width	10.7 mm
Length	107.3 mm
Grid dimension	10.7 mm
Max. number of valve positions	1
Operating pressure	-0.9 ... 10 bar
Pilot pressure	3 ... 8 bar
Corrosion resistance classification CRC	3
Ambient temperature	-5 ... 50 °C
Pneumatic connection, port 2	QS-10
Pneumatic connection, port 4	QS-10
Materials note	Conforms to RoHS
Materials information for sub-base	PA-reinforced

Sub-base
VMPAL-AP-10-QS1/4"-2

Part number: 561000

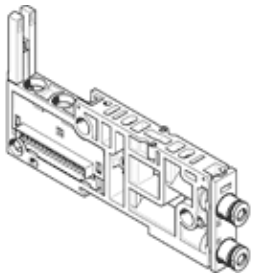

Data sheet

Feature	values
Width	10.7 mm
Length	107.3 mm
Grid dimension	10.7 mm
Max. number of valve positions	1
Operating pressure	-0.9 ... 10 bar
Pilot pressure	3 ... 8 bar
Corrosion resistance classification CRC	3
Ambient temperature	-5 ... 50 °C
Pneumatic connection, port 2	QS-10
Pneumatic connection, port 4	QS-10
Materials note	Conforms to RoHS
Materials information for sub-base	PA-reinforced

Power supply module
VMPAL-SP

Part number: 570774

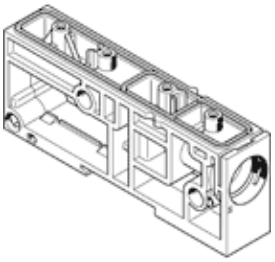

Data sheet

Feature	values
Operating pressure	-0.9 ... 10 bar
Pilot pressure	3 ... 8 bar
Corrosion resistance classification CRC	3
Ambient temperature	-5 ... 50 °C
Pneumatic connection, port 1	QS-20
Materials note	Conforms to RoHS
Material information, power supply module	PA-reinforced

Description :
LIQUID POLYMER SYSTEM 1/2
WATER FLOW RANGE 0.4 - 7.93 GPM (90 - 1800 LPH)
120V POWER SUPPLY, 4-20 mA with 24V relay
POLYMER FLOW 0.001 - 7.93 USGPH(0.1 - 500 ml/min)
2 METERING PUMPS

Trade Name :
Fournier Industries inc.

Model no :
POLYSYS-1/2-120V-Duplex

TECHNICAL & OPERATING DOCUMENTATION

POLYSYS-1/2-120V (LIQUID POLYMER SYSTEM)

Fournier Industries Inc.
3787, West Frontenac Blvd.,
Thetford Mines (Quebec) Canada
G6H 2B5
www.fournierdewatering.com

February 2023
Rev. 06

TECHNICAL INFORMATION
POLYSYS-1/2-120V

1.0 Description

1.1 Emulsion Polymer Make-Up System (Liquid Polymer System)

The polymer system is capable of effectively activating and fully blending a homogenous final polymer solution from neat polymers with a 0.1% to 0.45% concentration with an active content from 40% to 55% at maximum flow capacity.

2.0 Mechanical Equipment

2.1 Water pressure regulator (relief valve)

is this supplied?

Clean or filtered water is required at a minimum pressure of 45 PSI. The water pressure must not exceed 100 PSI. Supplied pressure is controlled by a water pressure reducing valve and shall be adjusted to 40 PSI. A pressure gauge, fixed on the water line, will display real time pressure while the system is under operation.

2.2 Proportional Valve (Dilution water flow)

During the process, the water flow is controlled by a proportional valve - an assembly of a ball valve and a positioner. The positioner requires a minimum air pressure of 90 PSI. The operational flow range for this valve is selected from 0.4 to 7.93 GPM (90 to 1800 LPH) @ 40 PSI and will be measured by a flow meter installed on the flocculator (already provided with the Rotary Press). The regulation of this valve will be based on the ratio Polymer vs. Sludge, calculated from the Rotary Press PLC.

2.3 Chemical Metering Pump (Polymer dosing)

The pump is a peristaltic type. The flow rate range shall be 0.1–500ml/min (0.001–7.93USGPH) and up to 7 bar (100 psi) RMS pressure. A polymer strainer is included and mounted on the inlet suction side of the pump. The control of this pump will be based on Water Flow vs. Final Concentration, calculated from the Rotary Press PLC.

2.4 Static Mixer (Mixing Chamber)

The polymer and the water are injected and mixed inside the static mixer. The energy required for the mixing comes from a loss in pressure as water flows through the static mixer. At the outlet of this motionless mixer, the final solution at the accurate concentration is created.

2.5 Hardware

The support frame, brackets, ball valves are made of 304 SS.
The piping shall is made of polyethylene and stainless steel.
The inlet & outlet of the neat polymer dosing pump is flexible reinforced tubing

3.0 Electrical Equipment

3.1 Proportional Valve (Dilution water flow)

The proportional valve requires 24 VDC power and 4-20 mA signal for control.

3.2 Chemical Metering Pump (Polymer dosing)

The pump must be powered with 120VAC, 50/60 Hz, and the control is 4-20 mA.

3.3 Junction Box (NEMA 4X)

The simple construction of these enclosures makes them durable in corrosive environments and have a secure seal. The pump & proportional valves are landed on terminal blocks. The electrical supply can come from a standard electrical outlet 120VAC or from the Fournier control panel. A power supply 120VAC / 24VDC is included. The control is provided by a remote or an existing PLC & HMI. It is recommended to have this system controlled by the Rotary Press PLC and HMI for full integration.

4.0 Control

The control of the make-up system is provided by the Rotary Press control panel or existing PLC and HMI. The HMI allows the user to manually change the concentration and percent active parameters of the neat polymer as well as the desired final concentration of solution. The HMI allows for the components to be operated in Hand mode as well as to function in Auto (remote) mode, which uses the control signal from the Rotary Press PLC.

5.0 Maintenance

All components are modular. No special tool is required and it is easily accessible.

6.0 Spare parts

One (1) kit of Metering Pump Head replacement (no special tool required).

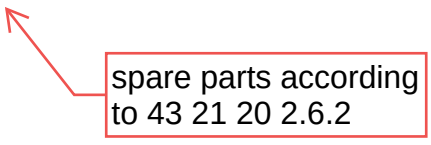

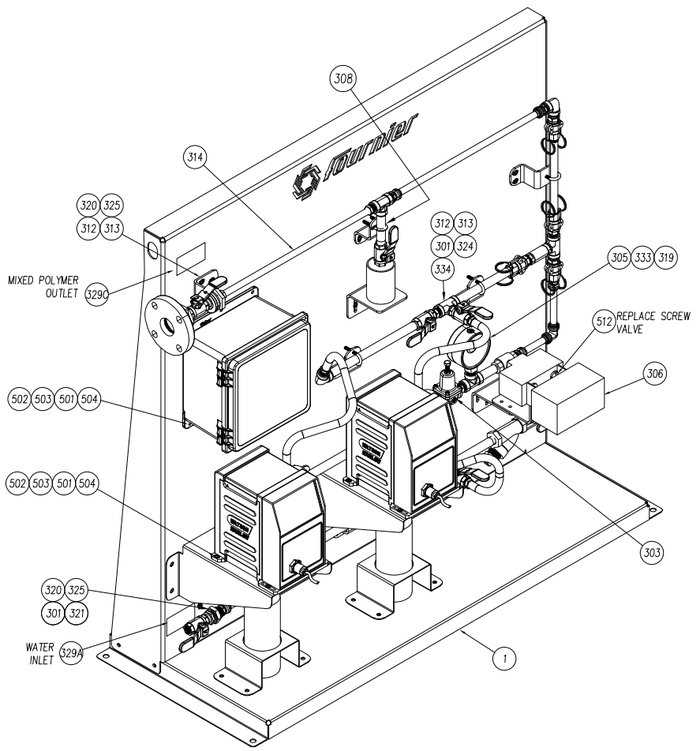

333		1	REDUCER 1/4"–NPT/F @ 1/2"–NPT/M	S.S.	0.1	102330		
334		3	"TEE" ø1/2"–NPT F/M/F, 150#	S.S.		MCM–48805K195		
335		2	ELBOW ø1/2" – PUSH–TO–CONNECT	PLASTIC		WAT–3517–10		
336		1	THREADED PIPE NIPPLE ø1/2" X 6" LG.	S.S.		104057		
500		7	U–BOLT, 1/4–NC, FOR ø1/2" PIPE	S.S.		MCM–8896T103		
501		26	FLAT WASHER 1/4"	304		#102229		
502		14	HEX SOCKET BUTTON CAP SCREW 1/4"–20NC X 1" LG.	S.S.		102217		
503		14	HEX. NUT 1/4–20	S.S.		#102064KP		
504		14	LOCK WASHER Ø1/4"	S.S.		#102053KP		
512		4	SOCKET HEAD CAP SCREW M5 x .8 X 12mm LG.	S.S.		117923		

where is this?

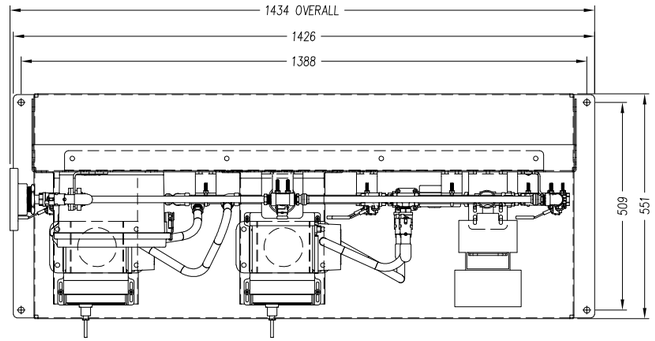

ARTICLE ITEM	REPÈRE REF.	NOMBRE QTY(1)	DÉSIGNATION / DESIGNATION	MATÉRIEL MATERIAL	POIDS(kg) WEIGHT UNIT.(1)	REMARQUES / NOTES - #1FI	✓
1		1	POLYMER SYSTEM – FRAME	S.S.	40		
2		1	THREADED PIPE NIPPLE ø1/2" X 20" LG.	S.S.	2		
3		1	THREADED PIPE NIPPLE ø1/2" X 16" LG.	S.S.	2		
4		1	THREADED PIPE NIPPLE ø1/2" X 12" LG.	S.S.	1		
300		2	PERISTALTIC METERING PUMP (120V, 4–20 mA)	PLASTIC	5	WM–Qdos30–120V/R	
301		8	BALL VALVE ø1/2"–NPT/F	S.S.	0.3	102516	
302		1	THREADED S.S. STATIC MIXER ø1/2", NPT/M	S.S.	0.4	KOF–1/2–40–3–12–2	
303		1	WATER PRESSURE REDUCING VALVE ø1/2"–NPT/F	S.S.	0.91	WAT–SS263AP–D	
304		1	MEDIUM PRESSURE Y–STRAINER ø1/2"–NPT/F	S.S.	0.6	MCM–4745K53	
305		1	PRESSURE GAUGE ø1/4–NPT/M, EXT. Ø4", 0–100 PSI	S.S.	1	MCM–4003K61	
306		1	BALL VALVE ø1/2"–NPT/F WITH SOLENOID	S.S.	1	FESTO IFI–FESVZBE–1/2	
307		1	THREADED CHECK VALVE Ø1/2"–NPT/F	S.S.	1	MCM–1874N15	
308		2	THREADED PIPE NIPPLE ø1/2" X 4" LG.	S.S.		117920	
309		1	THREADED PIPE NIPPLE ø1/2" X 3" LG.	S.S.		104138	
310		1	THREADED PIPE NIPPLE ø1/2" X 8" LG.	S.S.		117921	
311		4	90° ELBOW ø1/2"–NPT/F, 150#	S.S.		102424	
312		6	COMBINATION NIPPLE ø1/2"–NPT/M – ø1/2" HOSE	S.S.		117922	
313		10	HEAVY–DUTY HOSE CLAMP MIKALOR (0.75 – 0.83)	S.S.		MIK–W4–19–21	
314		5	REINFORCED TUBING 1/2" I.D., 3/4" O.D. X 2' LG.	PVC		COL–06602–16	
315		2	HYDRAULIC CONNECTION PACK – 1/2" HOSE	POLYPROPYLENE		INT–OM9.401H.P05	
316		2	REINFORCED TUBING 1/4" I.D., 7/16" O.D. X 2' LG.	PVC		COL–06602–12	
317		2	HEAVY–DUTY HIGH–DENSITY BOTTLE, 1 L	POLYETHYLENE		COL–06025–50	
318		2	FILLING/VENTING CAP FOR 1/4" TUBING	POLYETHYLENE		COL–06258–10	
319		2	TEE ø1/2" NPT–F, 150#	S.S.		102439	
320		2	BULKHEAD COUPLING 1/2"–NPT/F – 1/2–NPT/F	S.S.		MCM–6696K59	
321		6	PUSH–TO–CONNECT FITTING ø1/2", TO 1/2"–NPT/M	PLASTIC	0.1	WAT–3501–1008	
322		4	CAM–AND–GROOVE HOSE COUPLING ø1/2" – NPT/M	S.S.	0.1	AMI–CGF–050–SS	
323		4	CAM–AND–GROOVE HOSE COUPLING ø1/2", TO NPT/F	S.S.	0.1	AMI–CGD–050–SS	
324		3	THREADED PIPE FITTING ø1/2", NPT/M TO NPT/M	S.S.	0.1	MCM–4464K741	
325		3	SHORT THREADED PIPE NIPPLE 1/2–NPT/M	S.S.	0.1	102383	
326		3	(BLUE) PEX PIPE ø1/2" X 2'–0" LG.	POLYETHYLENE		PEX–100400	
327		1	(RED) PEX PIPE ø1/2" X 2'–0" LG.	POLYETHYLENE		PEX–100401	
328		1	JUNCTION BOX 10" x 10"	POLYESTER	1	HOF–A10106PHC	
329A		1	NAME PLATE STICKER (WATER INLET)	ALUMINUM	0.1	POLYSYS–NPA	
329B		1	NAME PLATE STICKER (POLYMER INLET)	ALUMINUM	0.1	POLYSYS–NPB	
329C		1	NAME PLATE STICKER (MIXED POLYMER OUTLET)	ALUMINUM	0.1	POLYSYS–NPC	
329D		1	NAME PLATE STICKER (SAMPLING OUTLET)	ALUMINUM	0.1	POLYSYS–NPD	
330		1	NAME PLATE STICKER (# OF SERIES)	ALUMINIUM	0.1		
331		1	THREADED FLANGE 2"–NPT	PVC	0.1	LAS–852–020	
332		1	REDUCER 2"–NPT/M @ 1/2"–NPT/F	INOX	0.1	117924	

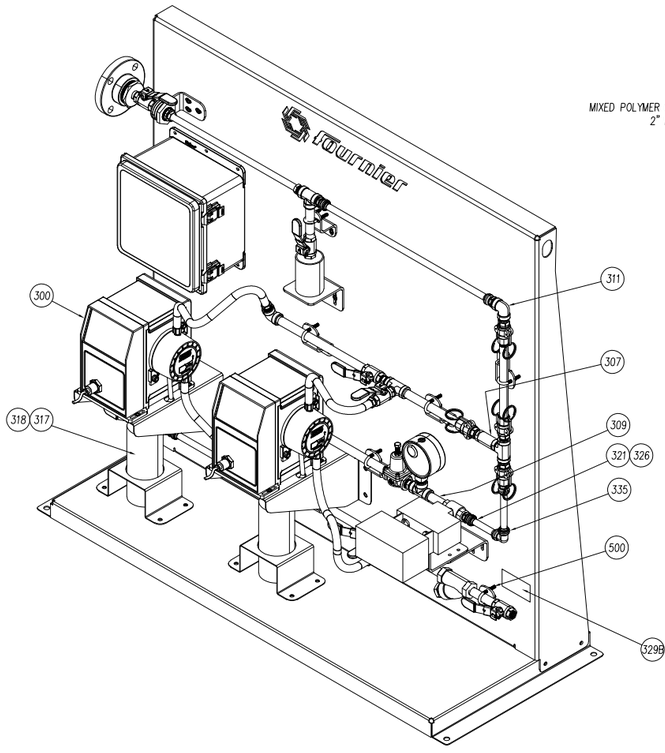

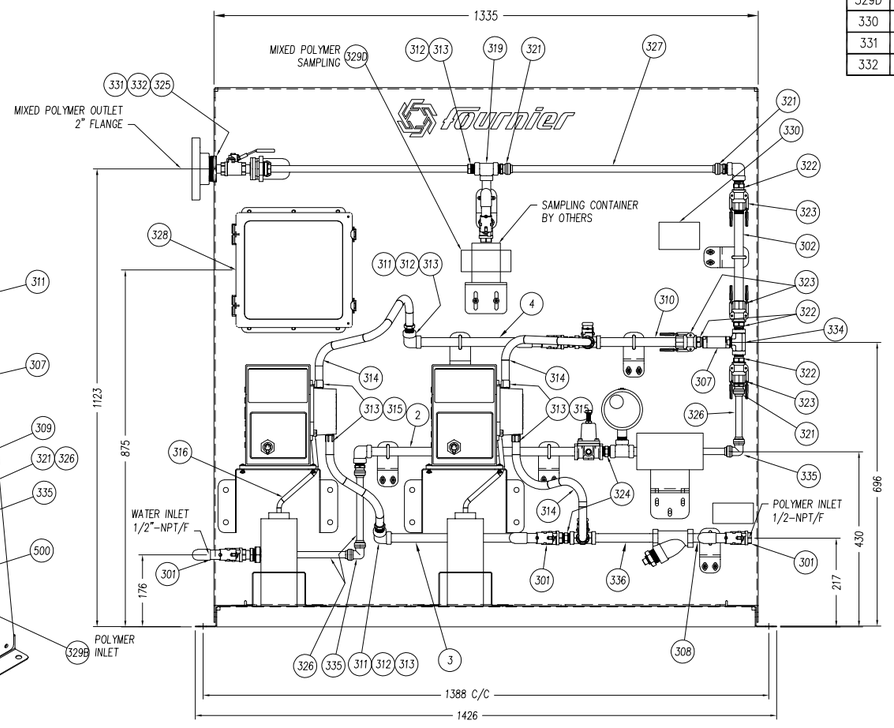

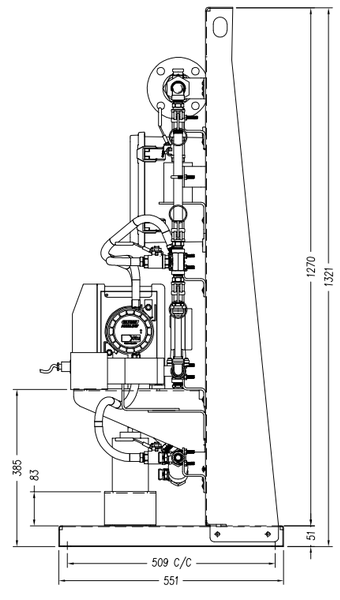

(1) LA QUANTITÉ EST DONNÉE POUR UN ASSEMBLAGE / QUANTITY GIVEN IS FOR ONE ASSEMBLY.
(2) LA QUANTITÉ EST DONNÉE POUR UN ASSEMBLAGE EXCLUANT LES ARTICLES MARQUÉS D'UN ASTÉRISQUE / QUANTITY GIVEN FOR ONE ASSEMBLY EXCLUDING ITEMS MARKED WITH AN ASTERISK.

PEINTURE(m2) PAINT SURFACE(2)	0	CAOUTCHOUC(m2) RUBBER SURFACE(2)	0	PL.USURE(kg) WEIGHT OF LINERS(2)	0	POIDS TOT.(kg) TOT. WEIGHT(2)	150	REQUIS TOTAL TOTAL REQ'D	1

Grand./Size D | Dessin No / Drawing No. | Page/Sheet 1 de 2 | Revision 01

No Projet / Project No. | No Production / Job No.

LÉGENDE/LEGEND

1 @ 299 = ASSEMBLAGES FABRIQUÉS / FABRICATED ASSEMBLY
300 @ 499 = COMPOSANTES MÉCANIQUE / MECHANICAL COMPONENTS
500 @ 699 = BOULONNERIE / BOLTS

NOTES GÉNÉRALES/GENERAL NOTES

NO.	REVISIONS	DATE (DD-MMM-YY)	BY/PAR
01	ÉMIS POUR CONSTRUCTION	26-08-2	M.F.

THIRD ANGLE PROJECTION
PROJECTION TROISIEME ANGLE

SURFACE FINISH 125 FINITION SURFACE

Tolérances sauf indications contraires/Tolerances unless otherwise stated

	SYSTÈME IMPÉRIAL / IMPERIAL SYSTEM			SYSTÈME MÉTRIQUE / METRIC SYSTEM	
	0 – 36"	36" +		0 – 1000mm	1000mm +
FRACTION	± 1/16"	± 1/8"	ENTIER / INTEGER	± 1 mm	± 2mm
2 PLACES .XX	± .010"	——	1 PLACES .X	± .50 mm	——
3 PLACES .XXX	± .005"	——	2 PLACES .XX	± .25 mm	——
ANGLES	——	± 1/2°	3 PLACES .XXX	± .125 mm	——

Ébavurer les arêtes vives (S.I.C.)/Deburring sharp edges (U.O.S)

Weld inspection according CSA W59 section 11 except otherwise noted
VT: 100% PT: As per symbol
UT: As per symbol MT: As per symbol
Sealed welds: 100% LT (leak test)
Lifting lugs: 100% MT , 100%VT

Inspection des soudures selon CSA W59 section 11 sauf indication contraire
VT: 100% PT: Selon symbole
UT: Selon symbole MT: Selon symbole
Soudures étanches: 100% LT (essai d'étanchéité)
Anneaux de levage: 100% MT , 100%VT

THIS DRAWING AND ALL THE INFORMATION IT CONTAINS ARE THE EXCLUSIVE PROPERTY OF LES INDUSTRIES FOURNIER INC. IT IS STRICTLY FORBIDDEN TO COMMUNICATE OR USE THE INFORMATION FOR PURPOSES OTHER THAN THE ORIGINAL INTENDED ONES OR IF THE USE COULD BE HARMFUL TO THE INTERESTS OF LES INDUSTRIES FOURNIER INC. THIS DRAWING IN WHOLE OR IN PART MAY NOT BE REPRODUCED IN ANY FASHION WHATSOEVER WITHOUT THE RETURNED TO LES INDUSTRIES FOURNIER INC. UPON REQUEST.

CE DESSIN ET TOUTES LES INFORMATIONS QUIL CONTIENT SONT LA PROPRIÉTÉ EXCLUSIVE DE LES INDUSTRIES FOURNIER INC. IL EST STRICTEMENT INTERDIT DE COMMUNIQUER OU UTILISER SON CONTENU À D'AUTRES FINS QUE CELLES PRÉVUES ORIGINALEMENT OU POUVANT ÊTRE PRÉJUDICIABLES AUX INTÉRÊTS DE LES INDUSTRIES FOURNIER INC. TOUTE REPRODUCTION DE CE DESSIN EST INTERDITE ET IL DOIT ÊTRE RETOURNÉ SUR DEMANDE.

Lire conjointement avec PRIE approuvé / Read in conjunction with the approved ITP

Par	Date (DD/MM/YY)	ETAPES	1	2	3	4	5	6	7	8	9
M.F.	27-08-21	1 ->MONT									
		NETTOY									
		EXPÉD									

fournier FOURNIER INDUSTRIES INC.
LES INDUSTRIES FOURNIER INC.
3787 BOUL. FRONTENAC, THETFORD-MINES
QUEBEC, CANADA, G6H-2B5

SYSTÈME DE DESHYDRATATION
SYSTEME A POLYMERE LIQUIDE
MODELE POLYSYS-1/2-120V (SUR MESURE)
ASSEMBLAGE

Dessiné / Drawn	Vérifié / Checked	Approuvé / Approved	No IFI / IFI No.
EGAMACHE	P.FORTIER	D. CLICHE	
Date: 20-01-2021	Échelle / Scale: 1:175	No Equipement du Client / Customer Equipment No.	

Grand./Size D | Dessin No / Drawing No. | Page/Sheet 1 de 2 | Revision 01

change to english

ARTICLE ITEM	REPÈRE REF.	NOMBRE QTY(1)	DÉSIGNATION / DESIGNATION	MATÉRIEL MATERIAL	POIDS(kg) WEIGHT UNIT.(1)	REMARQUES / NOTES - #1FI	✓	NOTES ENTRÉES
300		2	POMPE DOSEUSE (120V, 4-20 mA)	-	5	WATSON MARLOW #QDOS30		
301		8	VANNE A BILLE ø1/2"-NPT/F	INOX	0.3			
302		1	MELANGEUR ø1/2", NPT/M	INOX	0.4	KOFLO #1/2-40-3-12-2		
303		1	RÉGULATEUR DE PRESSION ø1/2"-NPT/F	INOX	0.91	WATTS #SS263AP-D		
304		1	FILTRE ("STRAINER") ø1/2"-NPT/F	INOX	0.6	McMASTER #4745K53		
305		1	MANOMÈTRE Ø1/2-NPT/F, EXT.Ø4", (0-100 PSI)	INOX	1	McMASTER #4003K61		
306		1	VANNE À BILLE ø1/2"-NPT/F AVEC SOLENOID	INOX	1	FESTO #1FI-FESVZBE-1/2		
307		1	CLAPET ANTI-RETOUR Ø1/2"-NPT/F	INOX	1	McMASTER #1874N15		
317		2	CONTENANT RÉCEPTION FUITES TÊTE DE POMPE					

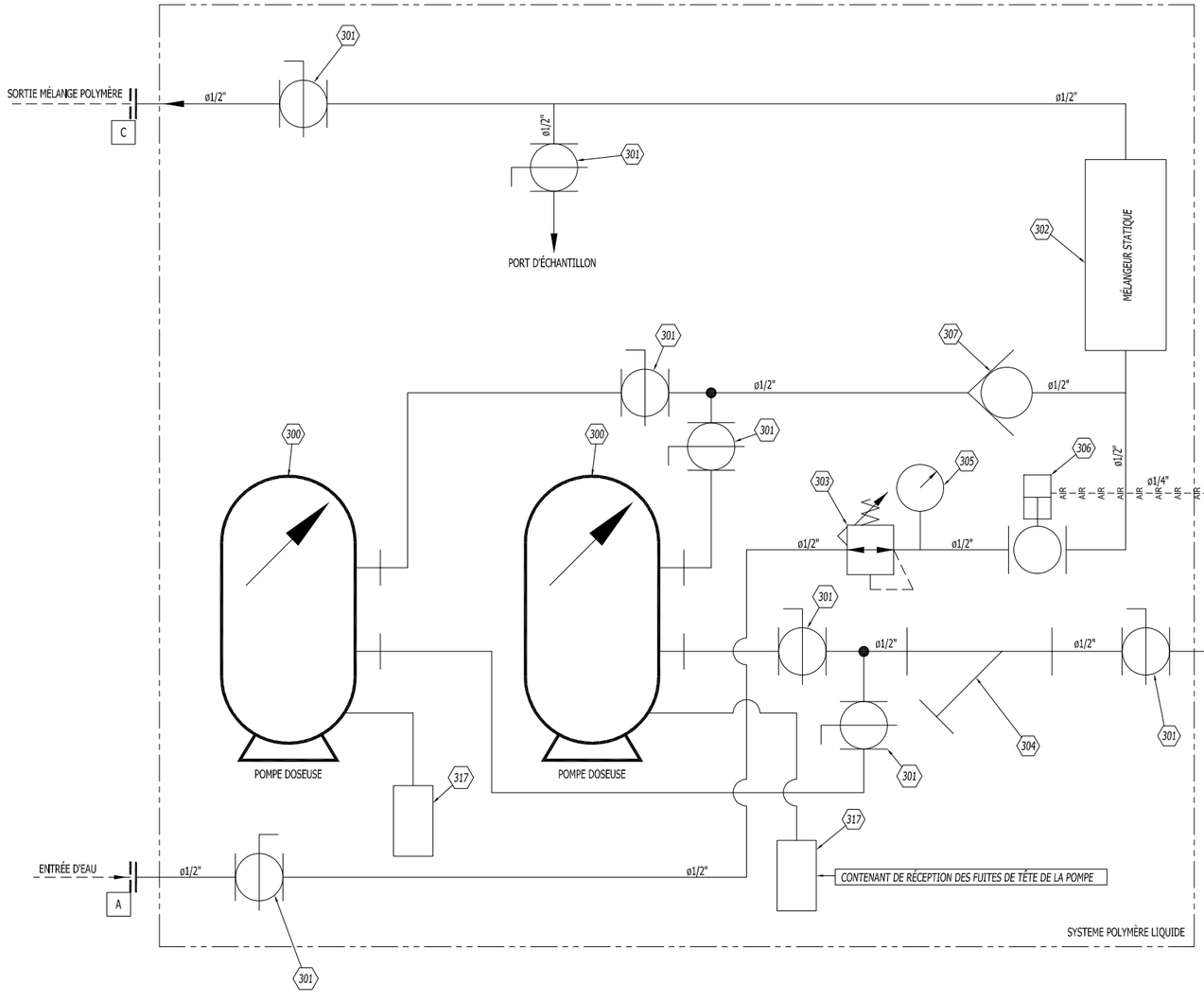

INTERFACE DE RACCORDEMENT DU SYSTÈME À POLYMÈRE A LA TUYAUTERIE DU CLIENT

- A — *ENTRÉE D'EAU ø1/2"-NPT/F*
- B — *ENTRÉE DU POLYMÈRE ø1/2"-NPT/F*
- C — *SORTIE DU MELANGE DE POLYMÈRE ø2" FLANGE, 150#*

LÉGENDE/LEGEND

1 @ 299 = ASSEMBLAGES FABRIQUÉS / FABRICATED ASSEMBLY
300 @ 499 = COMPOSANTES MÉCANIQUE / MECHANICAL COMPONENTS
500 @ 699 = BOULONNERIE / BOLTS

NOTES GÉNÉRALES/GENERAL NOTES

LEGENDE
FE: DEBITMETRE
PIT: TRANSMETTEUR DE PRESSION
PS: INTERRUPTEUR DE PRESSION

– – – – – : REPRESENTENT LA TUYAUTERIE FAIT PAR D'AUTRE.

—//—//—//— : BOYAU D'AIR FOURNI & INSTALLÉ PAR FOURNIER

—AIR—AIR—AIR— : BOYAU FOURNI ET INSTALLÉ PAR D'AUTRES

NO.	REVISIONS	DATE (DD-MM-YY)	BY/PAR
01	ÉMIS POUR CONSTRUCTION	26-08-21	M.F.

THIRD ANGLE PROJECTION
PROJECTION TROISIEME ANGLE

SURFACE FINISH / FINITION SURFACE 125

Tolérances sauf Indications contraires/Tolerances unless otherwise stated
SYSTÈME IMPÉRIAL / IMPERIAL SYSTEM — SYSTÈME MÉTRIQUE / METRIC SYSTEM

			0 ÷ 300	300 ÷ 1000mm	1000mm ÷
FRACTION	± 1/16"	± 1/8"	ENTIER / INTEGER	± 1 mm	± 2mm
2 PLACES .XX	± .010"	——	1 PLACES .X	± .50 mm	——
3 PLACES .XXX	± .005"	——	2 PLACES .XX	± .25 mm	——
ANGLES		± 1/2°	3 PLACES .XXX	± .125 mm	——

Ébavurer les arêtes vives (S.I.C.)/Deburring sharp edges (U.O.S)

Weld inspection according CSA W59 section 11 except otherwise noted
VT: 100% — PT: As per symbol
UT: As per symbol — MT: As per symbol
Sealed welds: 100% LT (leak test)
Lifting lugs: 100% MT , 100%VT

Inspection des soudures selon CSA W59 section 11 sauf indication contraire
VT: 100% — PT: Selon symbole
UT: Selon symbole — MT: Selon symbole
Soudures étanches: 100% LT (essai d'étanchéité)
Anneaux de levage: 100% MT , 100%VT

THIS DRAWING AND ALL THE INFORMATION IT CONTAINS ARE THE EXCLUSIVE PROPERTY OF LES INDUSTRIES FOURNIER INC. IT IS STRICTLY FORBIDDEN TO COMMUNICATE OR USE THE INFORMATION FOR PURPOSES OTHER THAN THE ORIGINAL INTENDED ONES OR IF THE USE COULD BE HARMFUL TO THE INTERESTS OF LES INDUSTRIES FOURNIER INC. THIS DRAWING IN WHOLE OR IN PART MAY NOT BE REPRODUCED IN ANY FASHION AND HAS TO BE RETURNED TO LES INDUSTRIES FOURNIER INC. UPON REQUEST.

CE DESSIN ET TOUTES LES INFORMATIONS QUIL CONTIENT SONT LA PROPRIÉTÉ EXCLUSIVE DE LES INDUSTRIES FOURNIER INC. IL EST STRICTEMENT INTERDIT DE COMMUNIQUER OU UTILISER SON CONTENU À D'AUTRES FINS QUE CELLES PRÉVUES ORIGINALEMENT OU POUVANT ÊTRE PRÉJUDICIABLES AUX INTÉRÊTS DE LES INDUSTRIES FOURNIER INC. TOUTE REPRODUCTION DE CE DESSIN EST INTERDITE ET L'AUTEUR DEVRA LUI ÊTRE RETOURNÉ SUR DEMANDE.

Lire conjointement avec PRIE approuvé / Read in conjunction with the approved ITP

Par										
M.F.	Date (DD-MM-YY) 27-08-21	MONT								
ETAPES		1	2	3	4	5	6	7	8	9

Fournier
FOURNIER INDUSTRIES INC.
LES INDUSTRIES FOURNIER INC.
3787 BOUL. FRONTENAC, THETFORD-MINES
QUEBEC, CANADA, G6H-2B5

SCHÉMA DE PROCÉDÉ - SYSTÈME À POLYMÈRE MODÈLE POLYSYS-1/2-120V (SUR MESURE)

Dessiné / Drawn	Vérifié / Checked	Approuvé / Approved	No IFI / IFI No.
J. LESSARD	P.FORTIER	D. CLICHE	
Date: 07-01-2021	Échelle / Scale: ----		No Équipement du Client / Customer Equipment No.

Grand./Size: D — Dessin No / Drawing No. — Page/Sheet: 2 de 2 — Révision: 01

(1) LA QUANTITÉ EST DONNÉE POUR UN ASSEMBLAGE / QUANTITY GIVEN IS FOR ONE ASSEMBLY.
(2) LA QUANTITÉ EST DONNÉE POUR UN ASSEMBLAGE EXCLUANT LES ARTICLES MARQUÉS D'UN ASTÉRISQUE / QUANTITY GIVEN FOR ONE ASSEMBLY EXCLUDING ITEMS MARKED WITH AN ASTERISK.

PEINTURE(m2) PAINT SURFACE(2)	0	CAOUTCHOUC(m2) RUBBER SURFACE(2)	0	PL.USURE(kg) WEIGHT OF LINERS(2)	0	POIDS TOT.(kg) TOT. WEIGHT(2)	0	REQUIS TOTAL TOTAL REQ'D	1

JB3001

10.12"(H) x 8.12"(W) x 4.38"(D)
(257 x 155 x 111 mm)

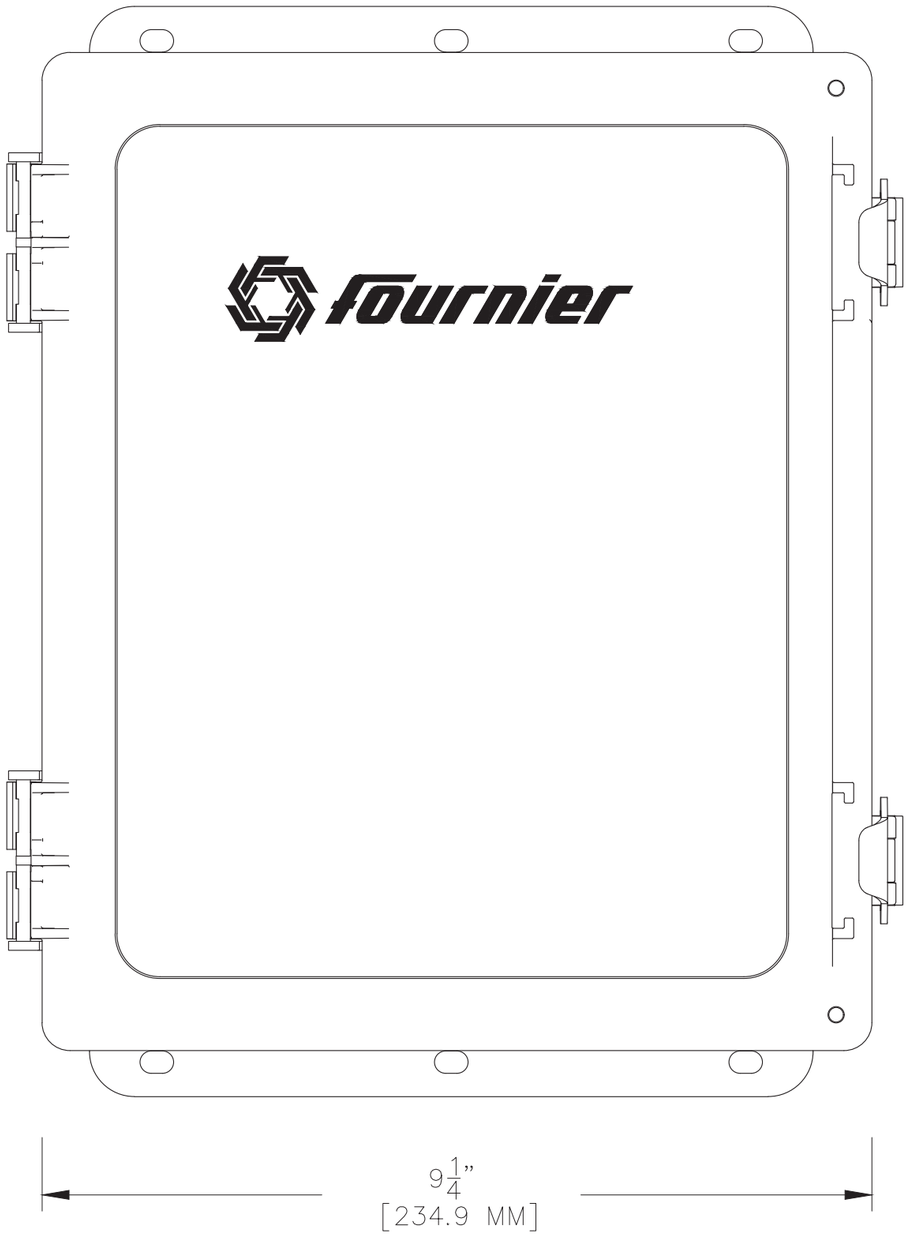

BP3001

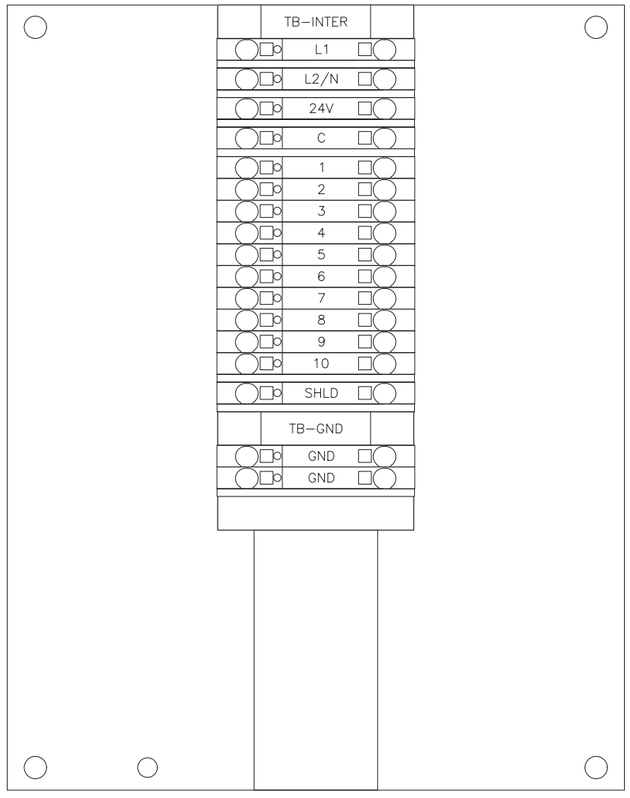

Notes générales / General notes	Rev.	Description	Date	Dessiné / Drawn
	3.0	DOSING PUMP RUNNING & FAULT SIGNALS ADDED	06/22/2022	D. MARTEL
	0.7	DOSING PUMP RUN COMMAND RENAMED & VALVE # IFI ADDED	11/29/2021	D. MARTEL
	0.6	WATER VALVE CABLE MODIFICATION	08/17/2021	D. MARTEL
	0.5	LIST OF MATERIAL UPDATED (2)	11/27/2020	D. MARTEL
	0.4	LIST OF MATERIAL UPDATED (1)	09/03/2020	D. MARTEL
	0.3	WATER VALVE PINOUT REVISED (2)	06/03/2020	D. MARTEL
	0.2	WATER VALVE PINOUT REVISED (1)	05/19/2020	D. MARTEL

LES INDUSTRIES FOURNIER INC.
FOURNIER INDUSTRIES INC.
3787 BOUL. FRONTENAC OUEST
THETFORD MINES, QUÉBEC, CANADA, G6H 2B5

CE DESSIN ET TOUTES LES INFORMATIONS QU'IL CONTIENT SONT LA PROPRIÉTÉ EXCLUSIVE DE LES INDUSTRIES FOURNIER INC. IL EST STRICTEMENT INTERDIT DE COMMUNIQUER OU UTILISER SON CONTENU À D'AUTRES FINS QUE CELLES PERMISES ORIGINALEMENT OU POUVANT ÊTRE PRÉJUDICIABLES AUX INTÉRÊTS DE LES INDUSTRIES FOURNIER INC. TOUTE REPRODUCTION DE CE DESSIN EST INTERDITE ET IL DOIT ÊTRE RETOURNÉ SUR DEMANDE.

THIS DRAWING AND ALL THE INFORMATION IT CONTAINS ARE THE EXCLUSIVE PROPERTY OF FOURNIER INDUSTRIES INC. IT IS STRICTLY FORBIDDEN TO COMMUNICATE OR USE THE INFORMATION FOR PURPOSES OTHER THAN THE ORIGINAL INTENDED ONES OR IF THE USE COULD BE HARMFUL TO THE INTERESTS OF FOURNIER INDUSTRIES INC. THIS DRAWING IN WHOLE OR IN PART MAY NOT BE REPRODUCED IN ANY FASHION AND HAS TO BE RETURNED TO FOURNIER INDUSTRIES INC. UPON REQUEST.

Sceau / Stamp

Créer par / Created by: D. MARTEL
Vérifié / Checked: D. MARTEL
Approuvé / Approuved: T. HUDON ENG.
Date de création / Creation date: 16/04/2020
Échelle / Scale:

FOURNIER - LIQUID POLYMER SYSTEM

MODEL : POLYSYS–1/2–120V

POLYMER SYSTEM JB
PANEL ARRANGEMENT

No Projet / Project No.	No Dessin/ Drawing No.	Revision
	D - 48551 - 3100	3.0

POLYMER SYSTEM SKID

TAG	QTY	DESCRIPTION	CAT. NO.	CAT. NO. (FOURNIER)	MANUFACTURER
CONDUIT3001	4	LIQUID TIGHT CONDUIT, 3/8", IN FEET	FTPV3758C	TEC-FTPV375-8CKE	TECHSPAN
	4	LIQUID TIGHT CONNECTOR, SWIVEL STRAIGHT TO 90, FOR 3/8" CONDUIT, 1/2 NPT, PLASTIC	PS0389NGY	TEC-CCNY-375-8KE	HUBBELL
DP3001	1	QDOS 30, CHEMICAL DOSING PUMP, 100-240 VAC 50/60 HZ, 4-20mA, DISPLAY, 5-24VDC RELAY	0M0.224R.GRA	WM-QDOS30-120V/R	WATSON MARLOW
WV3001	1	PROPORTIONNAL V-BALL VALVE 1/2", NPT/F, WITH POSITIONER	IFI-FESVZBE-1/2	IFI-FESVZBE-1/2	FOURNIER
WVP3001	1	ELECTROPNEUMATIC POSITIONER, 24 VDC, 4-20mA IN/OUT	CMSX-P-S-C-U-F1-S-50-A		FESTO

POLYMER SYSTEM JB

TAG	QTY	DESCRIPTION	CAT. NO.	CAT. NO. (FOURNIER)	MANUFACTURER
BP3001	1	GALVANIZED BACK PLATE 10" X 8"	A10P8G	HOF-A10P8G	HOFFMAN
JB3001	1	POLYESTER ENCLOSURE (10.12" X 8.12" X 4.38") NEMA 4X	A1084PHC	HOF-A1084PHC	HOFFMAN
TB-GND	1	GROUP MARKER FOR END BRACKET CLIPFIX 35, HEIGHT-ADJUSTABLE, GRAY	0811969	PHO-0811969KE	PHOENIX CONTACT
	2	PT4-PE, PUSH-IN TERMINAL, 1 LEVEL, GND, YELLOW/GREEN, 10-24 AWG	3211766	PHO-3211766KE	PHOENIX CONTACT
	1	PT4 PARTITION PLATE, GREY, (D-ST4)	3030420	PHO-3030420KE	PHOENIX CONTACT
	1	END BRACKET, CLIPFIX 35, GREY	3022218	PHO-3022218KE	PHOENIX CONTACT
TB-INTER	1	GROUP MARKER FOR END BRACKET CLIPFIX 35, HEIGHT-ADJUSTABLE, GRAY	0811969	PHO-0811969KE	PHOENIX CONTACT
	6	PT4 PARTITION PLATE, GREY, (D-ST4)	3030420	PHO-3030420KE	PHOENIX CONTACT
	15	PT4, PUSH-IN TERMINAL, 1 LEVEL, 32A, GREY, 10-24 AWG	3211757	PHO-3211757KE	PHOENIX CONTACT

Notes générales / General notes

Rev.	Description	Date	Dessiné / Drawn
3.0	DOSING PUMP RUNNING & FAULT SIGNALS ADDED	06/22/2022	D. MARTEL
0.7	DOSING PUMP RUN COMMAND RENAMED & VALVE # IFI ADDED	11/29/2021	D. MARTEL
0.6	WATER VALVE CABLE MODIFICATION	08/17/2021	D. MARTEL
0.5	LIST OF MATERIAL UPDATED (2)	11/27/2020	D. MARTEL
0.4	LIST OF MATERIAL UPDATED (1)	09/03/2020	D. MARTEL
0.3	WATER VALVE PINOUT REVISED (2)	06/03/2020	D. MARTEL
0.2	WATER VALVE PINOUT REVISED (1)	05/19/2020	D. MARTEL

LES INDUSTRIES FOURNIER INC.
FOURNIER INDUSTRIES INC.
3787 BOUL. FRONTENAC OUEST
THETFORD MINES, QUÉBEC, CANADA, G6H 2B5

CE DESSIN ET TOUTES LES INFORMATIONS QU'IL CONTIENT SONT LA PROPRIÉTÉ EXCLUSIVE DE LES INDUSTRIES FOURNIER INC. IL EST STRICTEMENT INTERDIT DE COMMUNIQUER OU UTILISER SON CONTENU À D'AUTRES FINS QUE CELLES PERMISES ORIGINALEMENT OU POUVANT ÊTRE PRÉJUDICIABLES AUX INTÉRÊTS DE LES INDUSTRIES FOURNIER INC. TOUTE REPRODUCTION DE CE DESSIN EST INTERDITE ET IL DOIT ÊTRE RETOURNÉ SUR DEMANDE.

THIS DRAWING AND ALL THE INFORMATION IT CONTAINS ARE THE EXCLUSIVE PROPERTY OF FOURNIER INDUSTRIES INC. IT IS STRICTLY FORBIDDEN TO COMMUNICATE OR USE THE INFORMATION FOR PURPOSES OTHER THAN THE ORIGINAL INTENDED ONES OR IF THE USE COULD BE HARMFUL TO THE INTERESTS OF FOURNIER INDUSTRIES INC. THIS DRAWING IN WHOLE OR IN PART MAY NOT BE REPRODUCED IN ANY FASHION AND HAS TO BE RETURNED TO FOURNIER INDUSTRIES INC. UPON REQUEST.

Sceau / Stamp

Créer par / Created by: D. MARTEL
Vérifié / Checked: D. MARTEL
Approuvé / Approuved: T. HUDON ENG.
Date de création / Creation date: 16/04/2020
Échelle / Scale:

FOURNIER - LIQUID POLYMER SYSTEM

MODEL : POLYSYS-1/2-120V

POLYMER SYSTEM
LIST OF MATERIAL

No Projet / Project No.:
No Dessin/ Drawing No.: D - 48551 - 3101
Revision: 3.0

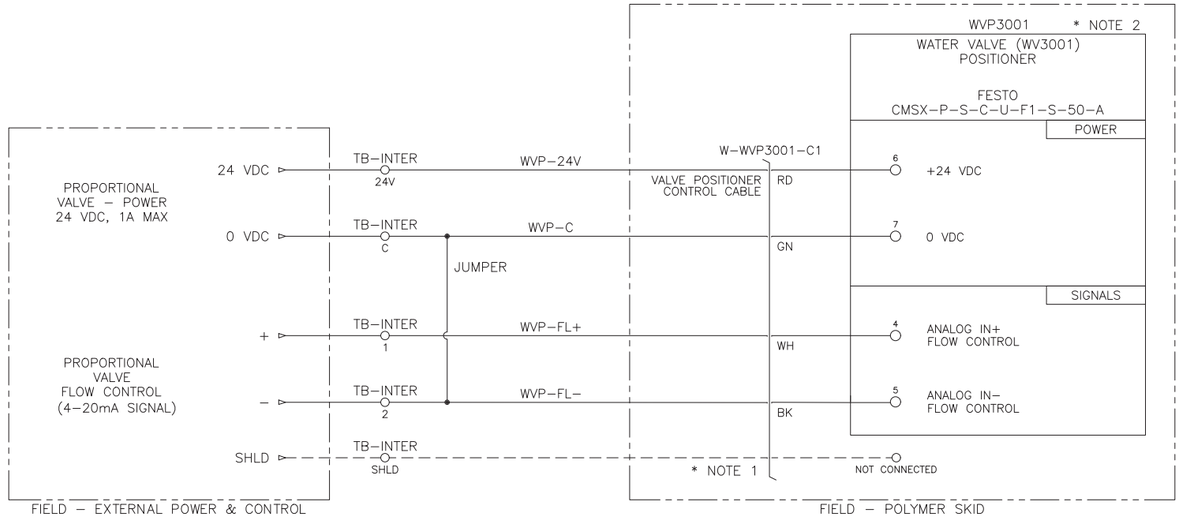

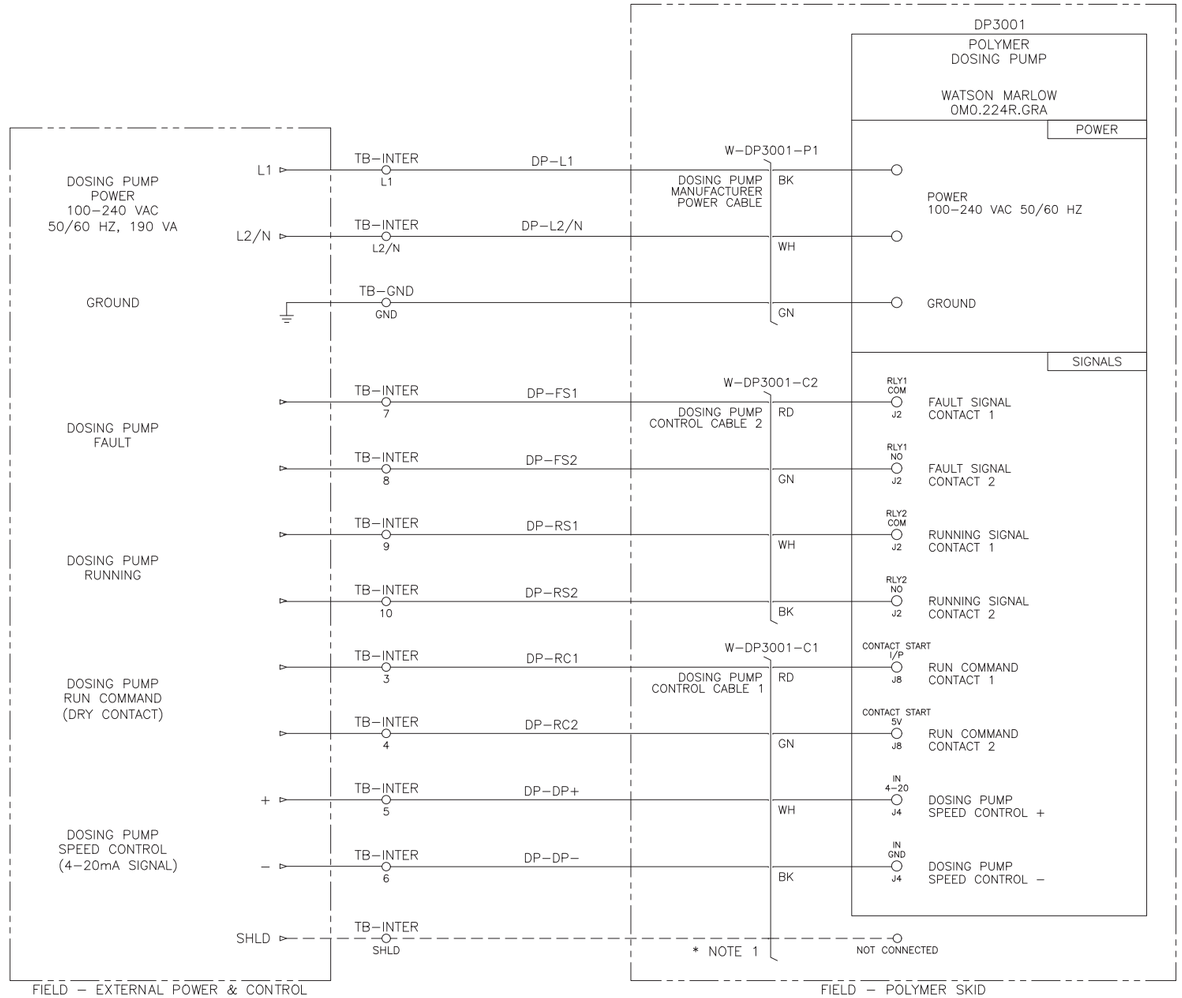

Notes générales / General notes

NOTE 1:
CABLE SHIELDING MUST STAY UNCONNECTED ON POLYMER SKID SIDE.

NOTE 2:
AIR SUPPLY MUST BE PROVIDED TO WATER VALVE POSITIONER.
ALWAYS USE CLEAN AND DRY AIR.

Rev.	Description	Date	Dessiné / Drawn
3.0	DOSING PUMP RUNNING & FAULT SIGNALS ADDED	06/22/2022	D. MARTEL
0.7	DOSING PUMP RUN COMMAND RENAMED & VALVE # IFI ADDED	11/29/2021	D. MARTEL
0.6	WATER VALVE CABLE MODIFICATION	08/17/2021	D. MARTEL
0.5	LIST OF MATERIAL UPDATED (2)	11/27/2020	D. MARTEL
0.4	LIST OF MATERIAL UPDATED (1)	09/03/2020	D. MARTEL
0.3	WATER VALVE PINOUT REVISED (2)	06/03/2020	D. MARTEL
0.2	WATER VALVE PINOUT REVISED (1)	05/19/2020	D. MARTEL

LES INDUSTRIES FOURNIER INC.
FOURNIER INDUSTRIES INC.
3787 BOUL. FRONTENAC OUEST
THETFORD MINES, QUÉBEC, CANADA, G6H 2B5

CE DESSIN ET TOUTES LES INFORMATIONS QU'IL CONTIENT SONT LA PROPRIÉTÉ EXCLUSIVE DE LES INDUSTRIES FOURNIER INC. IL EST STRICTEMENT INTERDIT DE COMMUNIQUER OU UTILISER SON CONTENU À D'AUTRES FINS QUE CELLES PERMISES ORIGINALEMENT OU POUVANT ÊTRE PRÉJUDICIABLES AUX INTÉRÊTS DE LES INDUSTRIES FOURNIER INC. TOUTE REPRODUCTION DE CE DESSIN EST INTERDITE ET IL DOIT ÊTRE RETOURNÉ SUR DEMANDE.

THIS DRAWING AND ALL THE INFORMATION IT CONTAINS ARE THE EXCLUSIVE PROPERTY OF FOURNIER INDUSTRIES INC. IT IS STRICTLY FORBIDDEN TO COMMUNICATE OR USE THE INFORMATION FOR PURPOSES OTHER THAN THE ORIGINAL INTENDED ONES OR IF THE USE COULD BE HARMFUL TO THE INTERESTS OF FOURNIER INDUSTRIES INC. THIS DRAWING IN WHOLE OR IN PART MAY NOT BE REPRODUCED IN ANY FASHION AND HAS TO BE RETURNED TO FOURNIER INDUSTRIES INC. UPON REQUEST.

Sceau / Stamp

Créer par / Created by	D. MARTEL
Vérifié / Checked	D. MARTEL
Approuvé / Approuved	T. HUDON ENG.
Date de création / Creation date	16/04/2020
Échelle / Scale	

FOURNIER - LIQUID POLYMER SYSTEM

MODEL : POLYSYS–1/2–120V

POLYMER SYSTEM JB
ELECTRICAL ARRANGEMENT

No Projet / Project No.	No Dessin/ Drawing No.	Revision
	D- 48551 - 3110	3.0

FQF-076R2 (171020)

Operator interface description
For
POLYSYS

LES INDUSTRIES FOURNIER INC.
3787, West Frontenac Blvd.,
Thetford Mines (Québec) Canada
G6H 2B5

Phone : (418) 423-4241
Fax : (418) 423-7366

Web Site: www.fournierindustries.com

Prepared by: Alexandre Landry

/AL

February 6, 2023

TABLE OF CONTENTS

1. Description of the page in the operator interface 3

THIS DOCUMENT AND ALL THE INFORMATION IT CONTAINS ARE THE EXCLUSIVE PROPERTY OF LES INDUSTRIES INC. IT IS STRICTLY FORBIDDEN TO COMMUNICATE OR USE THE INFORMATION FOR PURPOSES OTHER THAN THE ORIGINAL INTENDED ONES OR IF THE USE COULD BE HARMFUL TO THE INTERESTS OF LES INDUSTRIES FOURNIER INC. THIS DOCUMENT IN WHOLE OR IN PART MAY NOT BE REPRODUCED IN ANY FASHION AND HAS TO BE RETURNED TO LES INDUSTRIES FOURNIER INC. UPON REQUEST.

1. Description of the page in the operator interface

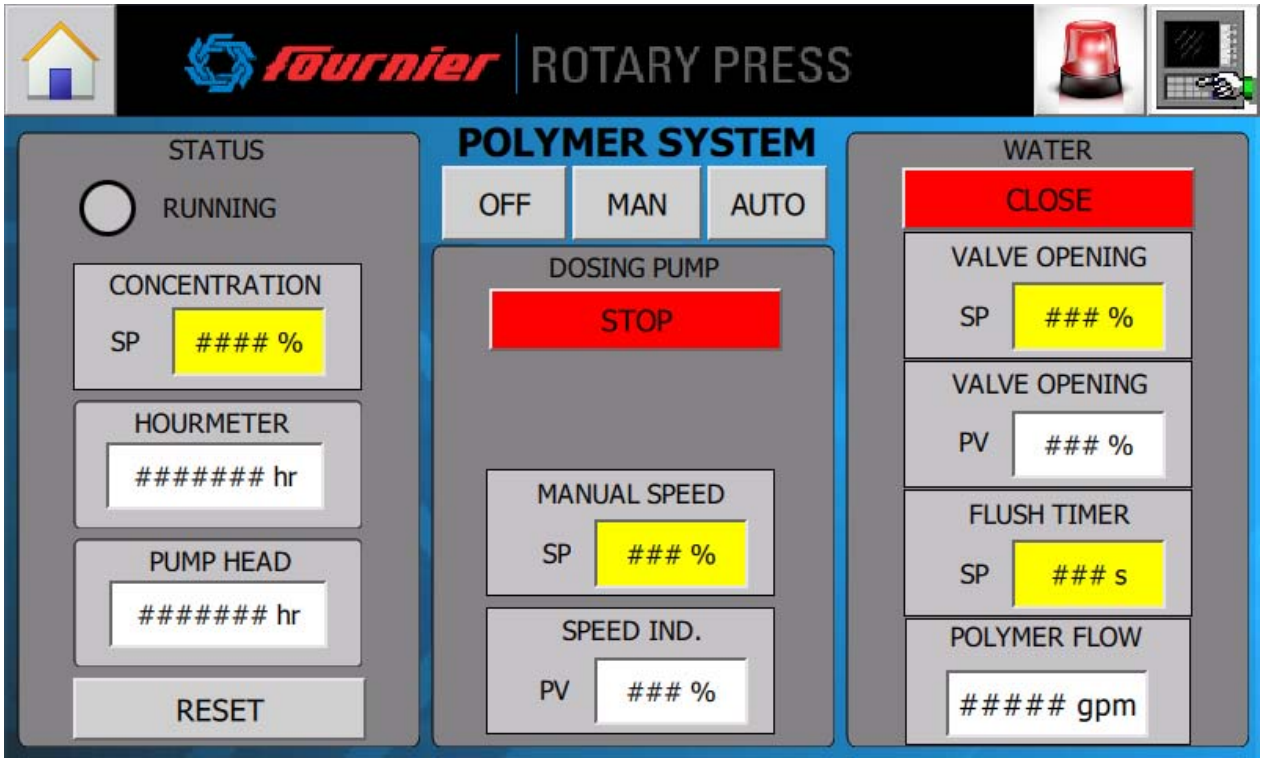

When a “Setpoint box” is pressed, this popup window opens

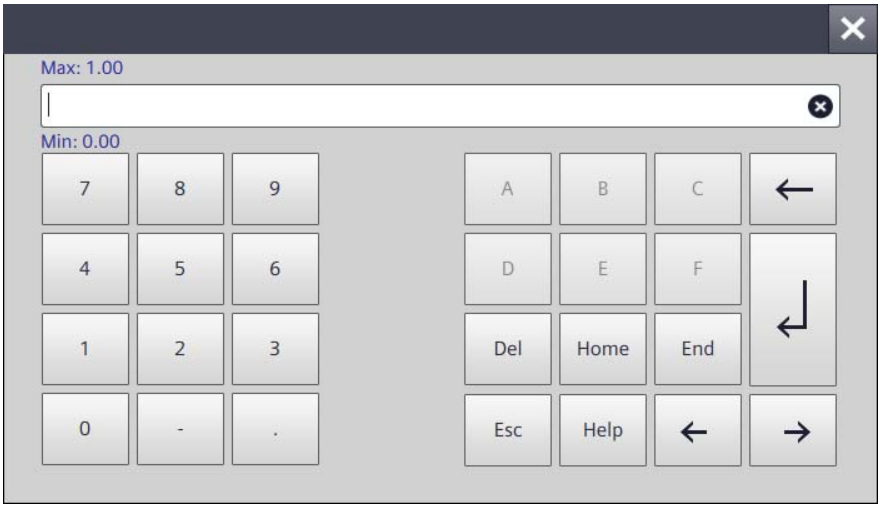

THIS DOCUMENT AND ALL THE INFORMATION IT CONTAINS ARE THE EXCLUSIVE PROPERTY OF LES INDUSTRIES INC. IT IS STRICTLY FORBIDDEN TO COMMUNICATE OR USE THE INFORMATION FOR PURPOSES OTHER THAN THE ORIGINAL INTENDED ONES OR IF THE USE COULD BE HARMFUL TO THE INTERESTS OF LES INDUSTRIES FOURNIER INC. THIS DOCUMENT IN WHOLE OR IN PART MAY NOT BE REPRODUCED IN ANY FASHION AND HAS TO BE RETURNED TO LES INDUSTRIES FOURNIER INC. UPON REQUEST.

If you want to :	Press :
- Operate the system in manual	
- Turn OFF the system	
- Set the system to the AUTOMATIC mode (will start, stop and receive its speed reference from remote commands)	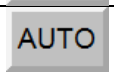
- Change a setpoint (solution concentration, dosing pump manual speed, water valve manual opening and flush timer)	Press the yellow setpoint box. Ex. Manual speed 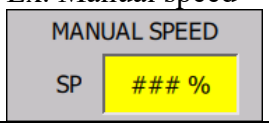
- Start or stop the dosing pump Note : the system must be in MAN	or
- Open or close the water valve Note : the system must be in MAN	or

THIS DOCUMENT AND ALL THE INFORMATION IT CONTAINS ARE THE EXCLUSIVE PROPERTY OF LES INDUSTRIES INC. IT IS STRICTLY FORBIDDEN TO COMMUNICATE OR USE THE INFORMATION FOR PURPOSES OTHER THAN THE ORIGINAL INTENDED ONES OR IF THE USE COULD BE HARMFUL TO THE INTERESTS OF LES INDUSTRIES FOURNIER INC. THIS DOCUMENT IN WHOLE OR IN PART MAY NOT BE REPRODUCED IN ANY FASHION AND HAS TO BE RETURNED TO LES INDUSTRIES FOURNIER INC. UPON REQUEST.

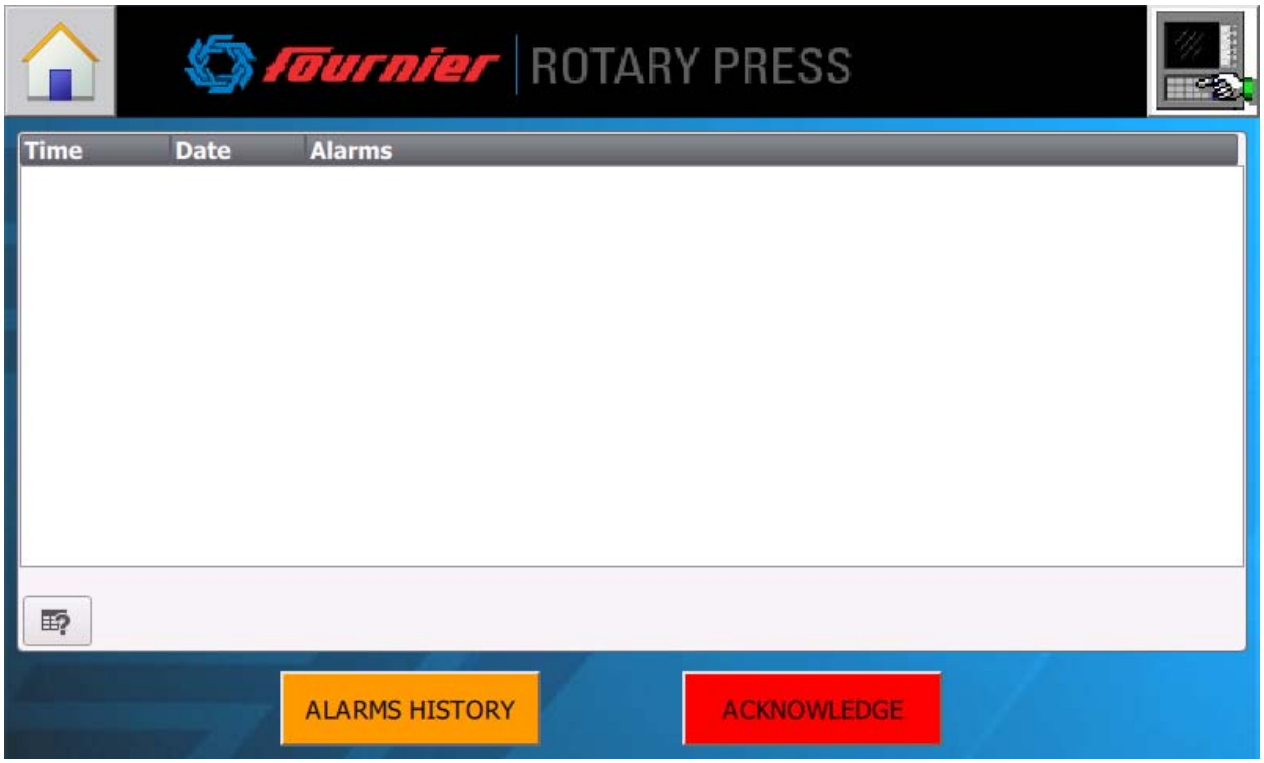

Press to clear the unactive alarms.

THIS DOCUMENT AND ALL THE INFORMATION IT CONTAINS ARE THE EXCLUSIVE PROPERTY OF LES INDUSTRIES INC. IT IS STRICTLY FORBIDDEN TO COMMUNICATE OR USE THE INFORMATION FOR PURPOSES OTHER THAN THE ORIGINAL INTENDED ONES OR IF THE USE COULD BE HARMFUL TO THE INTERESTS OF LES INDUSTRIES FOURNIER INC. THIS DOCUMENT IN WHOLE OR IN PART MAY NOT BE REPRODUCED IN ANY FASHION AND HAS TO BE RETURNED TO LES INDUSTRIES FOURNIER INC. UPON REQUEST.

Troubleshooting :

Symptoms	Possible Cause
The polymer concentration is not stable. (Color variation in clear tube)	Polymer inlet strainer is clogged.
	Static mixer is clogged.
Cake loss on the Rotary Press.	Polymer inlet strainer is clogged.
	Polymer check valve is clogged.
	Polymer feed tank is empty.
Pump head repeatedly last less than 6 months.	You most likely have a humidity problem inside your polymer feed tote or bad tote storage. When humidity gets in contact with liquid polymer it forms some clog. Those clogs then jam the polymer inlet strainer or the static mixer. The pump is struggling to send required polymer flow and the pump head does not last.
Leak Detected on QDos Pump screen.	Now is the time to replace the pump head. The pump head is a consumable part and cannot be serviced. Consult the pump's operations and maintenance manual for detailed instructions. Do not forget to contact our customer service to put a replacement head back in stock.
The QDos pump shows an error code.	Refer to the troubleshooting section of the pump operation manual inside this system manual.
The outlet flow rate of the system is too low.	Validate that you have a minimum of 40 psi of inlet water pressure at the proportional valve. If the pressure is below 40 psi, the system will not perform as expected.
	Static mixer is clogged.
No polymer flow trough the dosing pump.	Polymer inlet strainer is clogged.
	Polymer inlet valve is closed.
	Polymer feed tank is empty.
	Polymer check valve is clogged.
	The pump has an error code.
System outlet flow is zero.	The water inlet valve is closed.
	The proportional valve is not working.
	Static mixer is clogged.

Emulsion Polymers Guidelines, Storage & Handling

Basic Principles

An emulsion polymer is described as a heterogeneous suspension of hydrated polymer in oil. After adding the emulsion to water, a homogeneous solution of polymer in water is produced. Emulsions must be stored inside a building at a constant temperature between 5 and 30°C (41 °F to 86 °F). During the storage and handling of the product the emulsions must not be contaminated by water. Emulsions must not be stored in such a way that the surface of the product can be subject to ventilation. Emulsions should not be subjected to shearing forces. Pumping, filtering, and stirring should be applied with maximum care.

Lumps, Skins, Gels in the Emulsion

Emulsions are filtered at the end of their production process and are free of any heterogeneousness upon production. However, during transport or storage in non-recommended conditions, situations can arise where lumps, skins or gels can appear in the emulsions. The more common causes of this problem are: emulsions are subjected to very cold or freezing temperatures; cycles of warming cold temperatures are experienced.
This can happen when emulsions are stored outdoors. This type of phenomenon is sometimes called a “rain cycle” which may be described as the following. A shipping container of the emulsion initially at a temperature of 20°C (68°F) in a warehouse is placed for several hours out-of-doors where the temperature has dropped to 5°C (41°F). The water vapor contained in the free space above the product in the container condenses and therefore drops of water formed on the roof of the container precipitate onto the surface of the emulsion, creating local coagulations or gels.

How to Restore the Product

In such a situation we recommend that the emulsion be transferred by gravity, without previous agitation, in a free flowing mode to another container, while passing through a large area bag filter having a mesh size between 500-1,000 µ. It is common to place a filter bag in a funnel in the top bung of the drum or tote bin and drain an affected drum or tote bin through the filter into a clean container. For bulk deliveries, filtration at the reception point is recommended between the delivery truck or tank car and the emulsion storage tank.

FOURNIER INDUSTRIES GROUP INC.
3787 Frontenac Blvd. West, Thetford Mines (Quebec) Canada, G6H 2B5 Tel. (418) 423-4241 • Fax (418) 423-7366
E-Mail: general@fournierindustries.com Web Site: www.fournierindustries.com RBQ Lic. 1187-5754-87

General Observations

In storage a layer of mineral oil appears at the top of the emulsion and a second layer of the emulsion containing heavy solids appears at the bottom of the storage tank. The reason for this is that the internally dispersed phase (the hydrogel of polymer) has a higher density than the continuous oil phase, so the emulsion has a natural tendency to separate. This is the physical nature of emulsions. Emulsions start the cycle when they are left quiescent. It is difficult to predict the rate of settling of an emulsion. The settling rate depends upon many parameters including temperature, humidity, the type of the emulsion and other factors of the emulsion's composition.

How to Avoid Problems

Emulsions which are going to be stored for more than a month should be homogenized before use. Homogenization should be done by gentle agitation of approximately 400 RPM and for short periods of time no longer than 30 minutes per incident.

Recommendations for Agitating Emulsions

Care must be taken not to shear the emulsion and destabilize it by agitating it at higher speed or for too long a time. We do not recommend that agitation be accomplished by the recirculation of the emulsion. In cases where there is no other way to agitate the emulsion other than by recirculation, care should be taken to avoid the use of pumps which produce a strong shear force and avoid any device which creates an increase in pressure drop in front of the pump, such as, check valves. Agitation can also be accomplished by air sparging but only when the air is extremely dry. This method can be effective but it is not our first choice.

The Color of Emulsions

Most emulsions are opaque. Some are slightly translucent. Emulsions have colors that range from off-white, yellowish and even greenish. Because emulsions are a multi-phase system and are composed of many components, slight color changes which are impossible to control may occur. Variations can come from the stabilizers, the catalytic system, mineral oil, surfactants and other raw materials. Furthermore, slight differences in statistical distribution of the molecular weight of the polymer and the size of the beads of polymer may generate changes in the refractive index of the components and lead to slight color variations. Color changes can also occur during the storage due to temperature differences, UV light and the like. Color fluctuations have been proven to have no impact on the performance of the emulsion.

FOURNIER INDUSTRIES GROUP INC.
3787 Frontenac Blvd. West, Thetford Mines (Quebec) Canada, G6H 2B5 Tel. (418) 423-4241 • Fax (418) 423-7366
E-Mail: general@fournierindustries.com Web Site: www.fournierindustries.com RBQ Lic. 1187-5754-87

Common Difficulties with the use of Emulsion

Lumps

Sometimes an emulsion contains lumps, gels or skins which can plug pumps and small passages. The remedy is to filter the product. The agglomerates, since they are water soluble, can be pumped and dissolved in the emulsion itself except in paper mill applications where all non-totally dissolved polymer has to be avoided.

Shearing

As previously mentioned shearing must be avoided. Typically shearing occurs when check valves are present in electromagnetic pumps. The shear destabilizes and locally coagulates the emulsion on the seats of the closure balls. The polymer beads start to stick together and gel appears in the springs of the check valves. This results in a blockage of the pump.

Pressure Drop in Front of the Pump

This condition increases the shear in the pump and in the piping in front of the pump resulting in a destabilization of the emulsion and the formation of gels. We recommend that you avoid the use of any device which increases the pressure drop in front of the pump, such as valves and filters. We further recommend that you avoid any configuration where the pump injects the emulsion into a pipeline in which the pressure is high.

Water Contamination

The emulsion should not be contaminated with water during the storage or handling process. Pump components should be thoroughly dried before handling the emulsion again. The design of the make down system is critical and should be made in a way such that there was no possibility of dilution water back flow from its source into the meat emulsion piping or storage vessels.

Filtering an Emulsion

Filtration should only be done when emulsion gels have been observed. We suggest you avoid filtration at mesh sizes below 500 µ. Avoid use of narrow piping and passages. In-line filtration before use is not recommended. Do not agitate the emulsion before filtration.

FOURNIER INDUSTRIES GROUP INC.
3787 Frontenac Blvd. West, Thetford Mines (Quebec) Canada, G6H 2B5 Tel. (418) 423-4241 • Fax (418) 423-7366
E-Mail: general@fournierindustries.com Web Site: www.fournierindustries.com RBQ Lic. 1187-5754-87

qdos
Peristaltic Metering

Accurate, versatile chemical pumps

WATSON MARLOW Pumps

Now includes ReNu PU for polymer applications

Accurate, versatile chemical pumps

- Cut chemical cost through higher accuracy metering
- Simple drop-in installation eliminates ancillary equipment
- Reduced maintenance with single, no-tools, component replacement
- Flow rates from 0.1 to 2,000 ml/min (0.001 to 32 USGPH) at up to 7bar (100psi)

Total cost of ownership is less than a diaphragm pump

Typical installation comparing a diaphragm metering pump with the Qdos peristaltic metering pump

*Not required for Qdos system

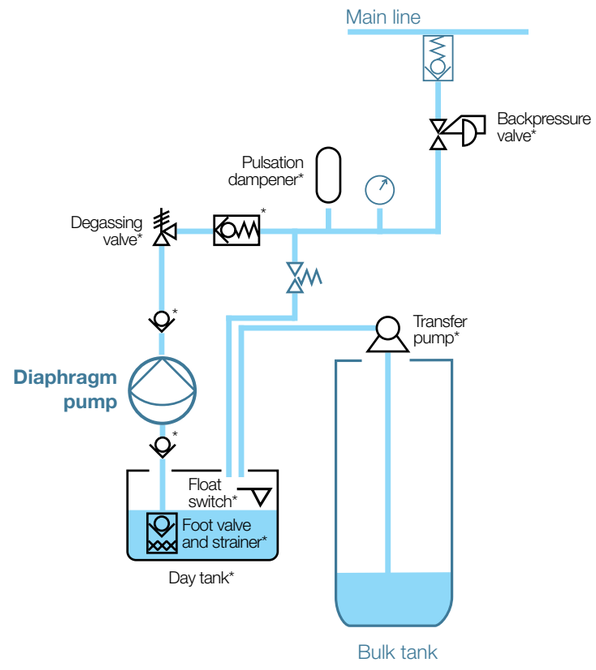

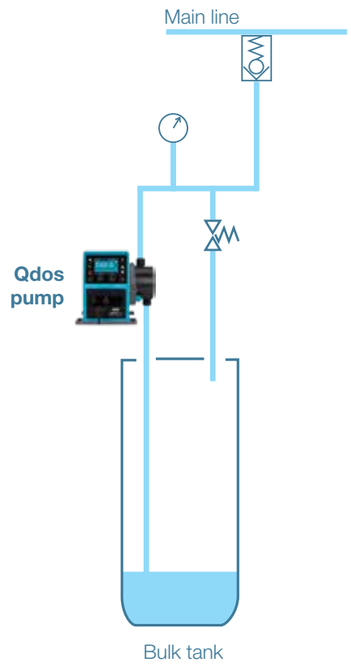

Diaphragm metering pumps require high maintenance ancillaries to function. The Qdos range eliminates this equipment while maintaining accurate, linear and repeatable metering for all process conditions.

- No backpressure valves
- No pulsation dampener
- No degassing valves
- No foot valves and strainers
- No float switches

ReNu Revolutionary pumphead technology

The unique design of the patented ReNu™ pumphead enables accurate and repeatable flow for fluids of wide ranging viscosities. **No-tools maintenance** means quick, safe and easy pumphead replacement with no specialist training or maintenance technicians.

The contained pumphead design with integral leak detection reduces wastage and eliminates operator exposure to chemicals.

NEW ReNu PU pumphead for polymers

Accurate, versatile chemical pumps

Optional HMI protective screen

Easy access high-visibility interface
Keypad and 3.5" TFT colour display provide easy access and high-visibility status indication. Configurable in 11 languages

Four models in the range
Qdos 20, Qdos 30, Qdos 60 and Qdos 120

Reduce your chemical costs
Accurate, linear and repeatable flow, with varying process conditions. Keeps pumping even when gassing-off occurs or when the chemical contains solids. No need to over-meter chemicals

Rugged IP66 (NEMA 4X) pump drive, designed for industrial environments

Simplify your system design
High suction lift and viscous handling eliminates the need for flooded suction, day tanks and specialist piping systems

Safe maintenance
The sealed ReNu pumphead with integral leak detection eliminates operator exposure to chemicals. No chemicals on the floor, no parts to clean and rebuild

12-24V DC Optional
For mobile skids or remote locations without mains power

Replace your pump in seconds
Process uptime is maximised with **no-tools maintenance** quick and easy pumphead replacement

Low maintenance
No valves or seals to clog, leak or corrode, giving minimal maintenance. Drop-in replacement for diaphragm metering pumps

Features of the Qdos range

Simplicity in installation, operation and maintenance were key considerations when designing the Qdos range of pumps.

An intuitive menu offers advanced control features including:

- Fluid level monitoring
- Line priming
- Flow calibration

The 3.5" TFT colour display provides instant pump status, and can be configured to display in 11 different languages.

Qdos pumps can be ordered with the ReNu pumphead mounted on the left or right of the pump. The keypad, display and input/output connections are readily accessible for easy operation and maintenance. All models are IP66 (NEMA 4X) rated for use in washdown environments.

Qdos pump model range functionality

Universal+	Universal	Manual
Flexibility for automatic and manual control together with configurable 4-20mA input and output	Automatic and manual control	Manual speed control

Remote	PROFIBUS
Remote control for absolute process security	Manual and PROFIBUS control

Certified to NSF / ANSI 61

N27364

Intertek

Features overview

Functionality	Universal +	Universal	Manual	Remote	PROFIBUS
Operational modes					
Manual	•	•	•		•
Contact	•	•			
4-20mA	•	•		•	
Fluid recovery	•	•	•	•	•
Fault reporting	•	•	•	•	•
PROFIBUS control and diagnostics					•
Manual control					
Numerical flow display	•	•	•		•
Numerical speed display	•	•	•		•
Numerical percentage of max speed display	•	•	•		•
Fluid level monitor	•	•	•		•
Max (prime)	•	•	•		•
Auto restart	•	•	•		•
Pumphead failure alarm	•	•	•		•
Remote control					
4-20mA input	•	•		•	
4-20mA input two point calibration	•				
4-20mA output	•			•	
Contact input (pulse/batch)	•	•			
Run stop input	•	•		•	
Run status output	•	•		•	
Alarm output	•	•		•	
Remote fluid recovery	•	•		•	
Optional 24V or 110V industrial logic*	•	•			
LED status icons					
Pump status				•	
4-20mA status				•	
Fault				•	
Security					
Keypad lock	•	•	•		•
PIN lock	•	•	•		•
Power supply					
12–24V DC	•	•	•	•	
~100-240V AC	•	•	•	•	•

*Control options - Universal and Universal+ models

Variant	Standard pump (L)
Input	5-24V DC
Output	Open collector
Variant	**Relay module (H)**
Input	110V AC
Output	Contact rating 110V AC, 5A 30V DC, 5A
Variant	**Relay module (R)**
Input	5-24V DC
Output	Contact rating 110V AC, 5A 30V DC, 5A

Standard pump (L)
Input and output control option

Relay module (H) or (R)
Input and output control option

Metering polymer flocculants

A major utility provider on Lake Michigan, Illinois had a requirement to clean-up wastewater run-off from a limestone quarry. They needed a solution for accurately dosing polymer flocculants.

Installing a Qdos pump fitted with a ReNu PU pumphead allowed them to meet water quality standards with a low maintenance, reliable solution. The unique ReNu PU pumphead is compatible with aliphatic hydrocarbons, making it perfect for long consumable life when dosing oil based polymers. The contained pumphead ensures easy changeover with minimal mess In addition, precision dosing of ±1%, even under varying conditions, minimises chemical expenditure.

Ensuring the supply of safe drinking water

High concentrations of iron and manganese in the Canadian Barrie region, mean that a sequestering agent is required for potable water. The City of Barrie Water Operations Branch uses sodium silicate (Na2SiO3) to bind the Fe/Mn and prevent it from oxidising. The effect is aesthetic to avoid staining sanitary ware.

Diaphragm metering pumps had been chosen to meter between 4-6 parts sodium silicate, until sticking ball valves and clogging caused serious maintenance issues at the unmanned site.

Investing in Qdos pumps was easy for the Water Operations Department to justify on the costs of downtime and spare parts alone.

Maintenance downtime cut from 1.5 hours to just five minutes

An important stage of wastewater purification at Selters, Germany, is the elimination of phosphates with the addition of precipitants, including ferric chloride.

Ferric chloride is both chemically aggressive and abrasive and attacked the diaphragms of the pumps previously used at the sites' metering station. Technicians were replacing pump diaphragms every 3 to 4 months, and each one took at least one hour to change, plus clean up time for leaked chemical.

Qdos pumps were installed in the precipitant metering station and immediately reduced maintenance time to five minutes.

Chemical metering with no gas locking

Victoria Water Treatment Plant use Qdos chemical metering pumps to meter fluoride, chlorine and polyphosphate in the water filtration, clarification and distribution process.

The pumps are employed to eliminate the gas locking problems previously experienced with pulsation diaphragm pumps. A Qdos 20 model with a tube material specifically formulated for high pressure sodium hypochlorite applications, has joined the chemical metering process.

Running at between 70 and 100psi and controlled by a 4-20mA input signal, the Qdos pumps at the Victoria WTW have significantly reduced maintenance downtime.

Precise delivery of electroplating chemicals

BIA Kunstoff- und Galvanotechnik is involved in electroplating plastic components with metallic surfaces for the automotive industry.

The Qdos pumps employed by BIA precisely dose the chemical additives to the electroplating machines with minimal pulsation, and avoid them being "shattered".

In addition to low pulse dosing, virtually no pump downtime and no additional accessories such as check valves, makes Qdos pumps the best choice for electroplating duties.

Rare mineral recovery process

In vital floatation duties at British Fluorspar, twelve Qdos pumps meter reagents from mixer tanks to header tanks.

Acid grade fluorspar (fluorite) is a relatively rare industrial mineral and its extraction involves precise metering of reagents such as methyl isobutyl carbinol, sodium isopropyl xanthate, caustic soda pearl and other chemicals. Overdosing of these chemicals is a costly business which must be avoided.

High precision chemical metering on the go

Qdos pumps are available with either mains power or 12-24V DC. If your chemical metering application involves a mobile skid or a remote location without mains power, then 12-24V Qdos meets your requirements. The 12-24V DC power option further increases the range of applications for Qdos pumping.

Weight

Model	kg	lb
Qdos 20	5.7	12lb 9oz
Qdos 30	5.0	11lb 2oz
Qdos 60	5.7	12lb 9oz
Qdos 120	5.7	12lb 9oz

Important note - The ReNu Pumphead contains lubricant. It is the user's responsibility to comply with local health and safety regulations, including ensuring chemical compatibility between the tubing, lubricant and the duty fluid before use. For guidance refer to www.wmftg.com/chemical

Dimensions

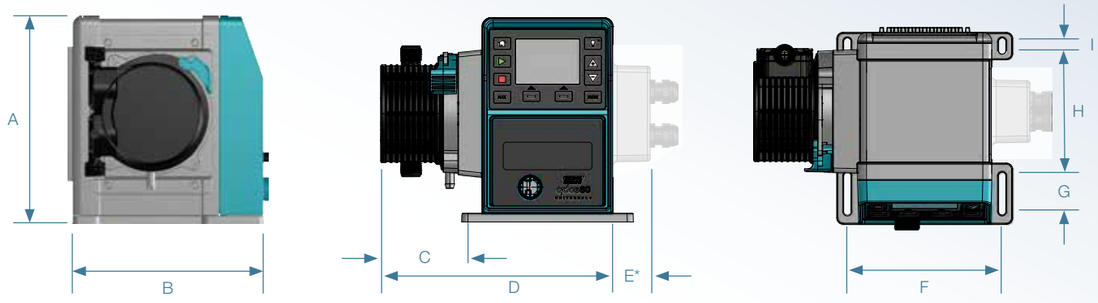

Model	A	B	C	D	E*	F	G	H	I
Qdos 20	234mm (9.2")	214mm (8.4")	118mm (4.6")	266mm (10.5")	43mm (1.7")	173mm (6.8")	40mm (1.6")	140mm (5.5")	10mm (0.4")
Qdos 30	234mm (9.2")	214mm (8.4")	82.5mm (3.2")	233mm (9.2")	43mm (1.7")	173mm (6.8")	40mm (1.6")	140mm (5.5")	10mm (0.4")
Qdos 60	234mm (9.2")	214mm (8.4")	118mm (4.6")	266mm (10.5")	43mm (1.7")	173mm (6.8")	40mm (1.6")	140mm (5.5")	10mm (0.4")
Qdos 120	234mm (9.2")	214mm (8.4")	118mm (4.6")	266mm (10.5")	43mm (1.7")	173mm (6.8")	40mm (1.6")	140mm (5.5")	10mm (0.4")

* Optional relay module

Performance data

Model	Flow (ml/min)				
	Qdos 20	Qdos 20 PU	Qdos 30	Qdos 60	Qdos 120
Universal+, Universal, Manual, PROFIBUS	0.1 – 333	0.1 – 484	0.1 – 500	0.1 – 1000	0.1 – 2000
Remote	0.2 – 333	-	0.3 – 500	0.6 – 1000	1.2 – 2000
	Flow (USGPH)				
Universal+, Universal, Manual, PROFIBUS	0.001 – 5.3	0.001 – 7.7	0.001 – 7.93	0.001 – 15.85	0.001 – 31.7
Remote	0.003 – 5.3	-	0.005 – 7.93	0.01 – 15.85	0.02 – 31.7

Performance curves

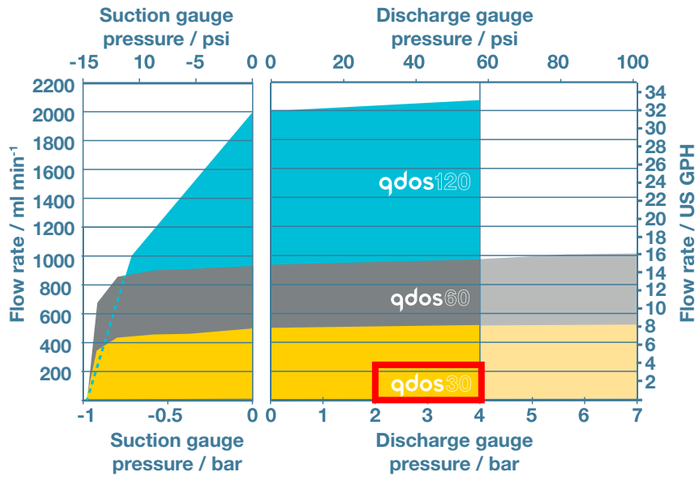

Recommended for a wide variety of chemical metering applications including sodium hypochlorite below 4bar (60psi)

Pumphead options

- Santoprene or SEBS
- Santoprene or SEBS
- Santoprene
- Santoprene
- Santoprene

Recommended for use with Aliphatic Hydrocarbons such as polymer metering for dewatering and coagulation applications

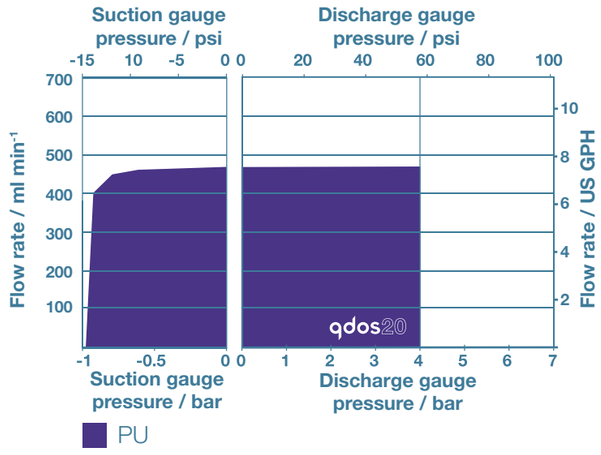

Recommended for Sodium hypochlorite applications with discharge pressure from 4 to 7Bar (60 to 100psi)

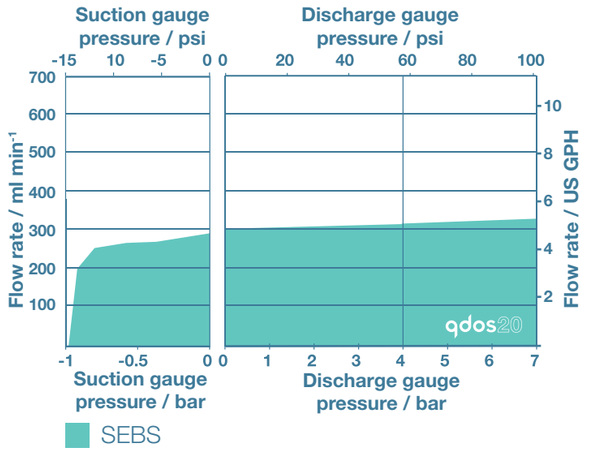

Qdos 30, 60 and 120 Universal and Universal+ pumps with ReNu Pump Head

qdos

Watson-Marlow Pumps

FEATURES AND BENEFITS

- **Drop in replacement & more accurate than diaphragm pumps**
- **Flow rates 0.001 GPH to 31.70 GPH at 100psi RMS pressure**
- **Pump turndown of 7930:1 with ± 0.5% accuracy**
- **ReNu Pump Head cartridge provides accurate, linear and repeatable flow**
- **Fluid recovery ensures operator safety and avoids chemical waste**
- **Manual, analogue or contact mode functionality**
- **No internal check valves to clog/wear**
- **No ancillary equipment required**

24 hour duty

Watson-Marlow...Innovation in Full Flow

FUNCTIONALITY

1. *NEMA 4X / IP66 Washdown Protection Rating* designed for industrial environments.
2. *High visibility 3.5" Color Display and Keypad* provide easy access, status indication and simplified configuration of the metering pump.
3. Unique design of the *ReNu™ Pump Head* can be replaced in seconds, without the need for tools.
4. *Fluid Level Monitoring* with low level alarm / empty tote alarm can be integrated into Nalco Water's 3D TRASAR™ technology, increasing customer value.
5. Peristaltic technology eliminates the possibility for vapor lock of the pump, ensuring that the pump meets the chemistry program feed demands.
6. Increased suction-lift specification eliminates the need for flooded suction configuration.
7. *Internal Optical Leak Detection* ensures leak containment in the event of a tube failure.
8. Pump head cartridge can be ordered on either side of the drive.

PUMP PERFORMANCE

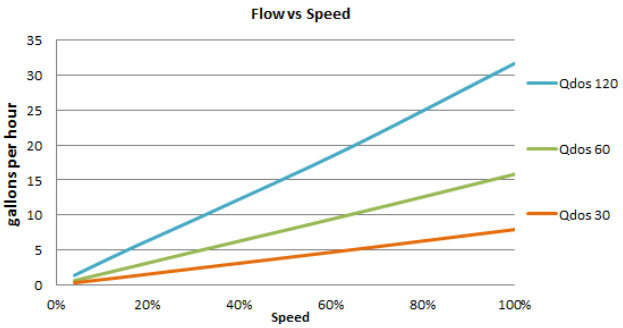

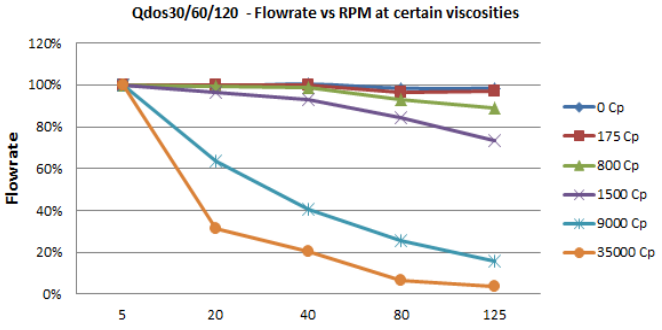

SIMPLE SYSTEM

Typical installation comparing a diaphragm metering pump with the Qdos peristaltic metering pump

*Not required for Qdos system

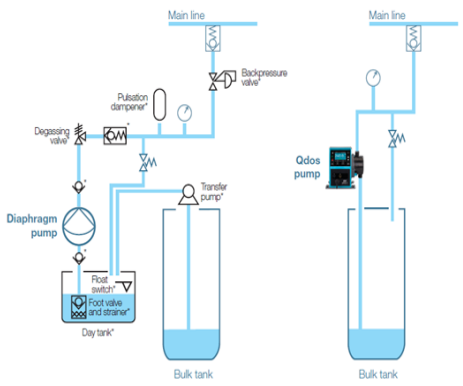

Functionality	Qdos Universal	Qdos Universal+
Fluid recovery and leak detection	•	•
Remote control		
4-20mA input	•	•
4-20mA input two point calibration		•
4-20mA output		•
Contact input (pulse/batch)	•	•
Run stop input	•	•
Run status output	•	•
Alarm output	•	•
Remote fluid recovery	•	•
Security		
Keypad lock	•	•
PIN lock to protect set up	•	•

DIMENSIONS

* Qdos30 – 3.2" // Qdos60/120 – 4.6"

PUMP SELECTION

Nalco Water Part Number	Pump Head Location Left	Model	Pump Head Type	Feed Rate	Max Pressure
6056618		Qdos30 U	Santoprene	0-8 gph	100 PSI
6065384		Qdos30 U+	Santoprene	0-8 gph	100 PSI
6059863		Qdos30 U	SEBS	0-8 gph	60 PSI
6065399		Qdos30 U+	SEBS	0-8 gph	60 PSI
6056620		Qdos60 U	Santoprene	0-16 gph	100 PSI
6065392		Qdos60 U+	Santoprene	0-16 gph	100 PSI
6059865		Qdos60 U	SEBS	0-16 gph	60 PSI
6065396		Qdos60 U+	SEBS	0-16 gph	60 PSI
6065358		Qdos120 U	Santoprene	0-32 gph	60 PSI
6065363		Qdos120 U+	Santoprene	0-32 gph	60 PSI

Nalco Water Part Number	Pump Head Location Right	Model	Pump Head Type	Feed Rate	Max Pressure
6056619		Qdos30 U	Santoprene	0-8 gph	100 PSI
6065401		Qdos30 U+	Santoprene	0-8 gph	100 PSI
6059864		Qdos30 U	SEBS	0-8 gph	60 PSI
6065400		Qdos30 U+	SEBS	0-8 gph	60 PSI
6056631		Qdos60 U	Santoprene	0-16 gph	100 PSI
6065393		Qdos60 U+	Santoprene	0-16 gph	100 PSI
6059866		Qdos60 U	SEBS	0-16 gph	60 PSI
6065355		Qdos60 U+	SEBS	0-16 gph	60 PSI
6065359		Qdos120 U	Santoprene	0-32 gph	60 PSI
6065364		Qdos120 U+	Santoprene	0-32 gph	60 PSI

WHAT'S IN THE BOX

- Pump
- ReNu™ pump head
- Process connections
- Power cable (attached to pump)
- Manual / Quick Start Guide
- Product Safety information booklet

SUPPORT

If you have any questions about the Qdos series pumps, please contact your Nalco Water representative. In North America, you can contact the Equipment Solutions Technical Support Group at 1-800-323-8483.

ACCESSORIES

Nalco Water Part Number	Image	Description
6056636		Qdos30 – SANTOPRENE Replacement Pump Head
6065327		Qdos30 – SEBS Replacement Pump Head
6056638		Qdos60 – SANTOPRENE Replacement Pump Head
6059868		Qdos60 – SEBS Replacement Pump Head
6065367		Qdos120 – SANTOPRENE Replacement Pump Head
6066304		Universal fit display and keypad cover
6066306		Input lead, M12 IP66, 3m (10ft) length
6066307		Output lead, M12 IP66, 3m (10ft) length
6066305		Replacement baseplate

Nalco Water Part Number	Image	Description
6066297		Interface tubing, PVC 6.3x11.5mm, 2m (6.5ft) length
6066298		Interface tubing, PVC 10x16mm, 2m (6.5ft) length
6066299		Interface tubing, PVC 6.3x11.5mm, 5m (6.5ft) length
6056634		Interface tubing, PVC 10x16mm, 5m (6.5ft) length
6066300		Interface tubing, polyethylene 9x12mm, 2m (6.5ft) length
6066301		Interface tubing, polyethylene 5x8mm, 2m (6.5ft) length
6066302		Interface tubing, polyethylene 9x12mm, 5m (6.5ft) length
6066303		Interface tubing, polyethylene 5x8mm, 5m (6.5ft) length
6052771	Hydraulic connection pack	Polypropylene compression fittings
6066294		Polypropylene, threaded fittings, 1/2" NPT
6066295		Polypropylene, 1/2" hose barb
6066296		PVDF, 1/4" hose barb, 3/8" hose barb, 1/4" BSP, 1/4" NPT
6052772		Polyprop 1/4" hose barb, 3/8" hose barb, 1/4" BSP,1/4" NPT

wd-qdosunnplus – Nalco Water US © Copyright 2017 Watson-Marlow Fluid Technology

WATSON MARLOW

Fluid Technology Group

SOLUTIONS POUR LE SECTEUR INDUSTRIEL

WATSON MARLOW Pumps

WATSON MARLOW Tubing

Bredel Hose Pumps

masosine Process Pumps

AFLEX HOSE

Watson-Marlow Fluid Technology Group

Watson-Marlow Fluid Technology Group assure à ses clients un service local grâce à un vaste réseau mondial de distribution et de vente directe

wmftg.com/global

Copyright © 2018 Watson-Marlow Fluid Technology Group HB0426 NUMÉRO 11

Clause de non-responsabilité : Les informations contenues dans ce document sont réputées exactes, cependant Watson-Marlow Limited décline toute responsabilité pour toute erreur qu'il pourrait comporter, et se réserve le droit de modifier ces informations sans préavis. Il incombe à l'utilisateur de vérifier l'adéquation du produit avec l'application prévue. Watson-Marlow, LoadSure, Qdos, ReNu, LaserTraceability, Pumpsil, PureWeld XL, Bioprene, Marprene sont des marques déposées de Watson-Marlow Limited. Tri-Clamp est une marque déposée de Alfa Laval Corporate AB. GORE et STA-PURE sont des marques déposées de W.L. Gore and Associates.

Société du groupe Spirax-Sarco Engineering

Watson-Marlow qdos

User Manual

Contents

1 Declaration of conformity **5**

2 Warranty **6**

2.1 Conditions 6

2.2 Exceptions 7

3 When you unpack your pump **8**

3.1 Packaging disposal 8

3.2 Inspection 8

3.3 Components supplied 8

3.4 Optional accessories 9

3.5 Storage 9

4 Information for returning pumps **10**

5 Safety notes **11**

6 Pump specifications **13**

6.1 Pump specifications 15

6.2 Standards (AC mains power supply) 16

6.3 Standards (12-24V DC power supply) 17

6.4 Dimensions 18

6.5 Weights 19

7 Good pump installation practice **20**

7.1 General recommendations 20

7.2 Do's and do not's 21

7.3 Pressure capability 21

7.4 Dry running 21

8 Connecting to a power supply **22**

8.1 AC mains power supply 22

8.2 DC power supply option 23

9 Start-up check list **24**

10 Automatic control wiring - Universal, Universal+ and Remote models without relay modules **25**

10.1 Input pin assignments at the pump 26

10.2 Optional input lead 26

10.3 Output pin assignments at the pump 27

10.4 Optional output lead 29

11 Automatic control wiring - 24V relay module and 110V relay module (Universal and Universal+ only) **30**

11.1 Module: cover removal and refitting 30

11.2 Wiring up the terminal connectors 31

11.3 24V relay module pcb connectors 34

11.4 110V relay module pcb connectors 37
12 PROFIBUS control wiring 40
12.1 PROFIBUS installation 40
12.2 Pin assignments at the pump 41
13 Switching on (Manual, PROFIBUS, Universal and Universal+) 42
13.1 Switching on the pump for the first time (Manual, PROFIBUS, Universal and Universal+ only) 42
13.2 Switching the pump on in subsequent power cycles (Manual, PROFIBUS, Universal and Universal+ only) 44
14 Switching on (Remote) 45
15 Pump operation 46
15.1 Pump operation (Remote pump) 46
15.2 Pump operation (Manual, PROFIBUS, Universal and Universal+ only) 46
16 Manual mode (Manual, PROFIBUS, Universal and Universal+ only) 49
17 PROFIBUS mode(PROFIBUS only) 52
17.1 Assigning the PROFIBUS station address at the pump 53
17.2 PROFIBUS communication errors 55
17.3 PROFIBUS GSD file 56
17.4 User Parameter Data 58
17.5 PROFIBUS data exchange 59
17.6 Device-related diagnostic data 62
17.7 Channel-related diagnostic data 62
18 Flow calibration mode (Manual, PROFIBUS, Universal and Universal+ only) 64
19 Analog 4-20mA mode (Universal and Universal+ only) 67
19.1 Calibrate the pump for 4-20mA control (Universal+ only) 72
20 Contact Mode (All Universal and Universal+ models except 110V relay versions) 77
20.1 Contact settings 77
20.2 Contact operating mode (All Universal and Universal+ models except 110V relay versions) 79
20.3 Fluid recovery mode (Manual, PROFIBUS, Universal and Universal+ only) 80
20.4 Remote fluid recovery (Universal and Universal+ models without relay modules) 82
21 Main menu (Manual, PROFIBUS, Universal and Universal+ only) 84
21.1 Fluid level monitor (Manual, PROFIBUS, Universal and Universal+ only) 85
21.2 Security settings (Manual, PROFIBUS, Universal and Universal+ only) 89
21.3 General settings (Manual, PROFIBUS, Universal and Universal+ only) 92
21.4 MODE menu (Manual, PROFIBUS, Universal and Universal+ only) 97
21.5 Control settings (Manual, PROFIBUS, Universal and Universal+ only) 98
21.6 Help (Manual, PROFIBUS, Universal and Universal+ only) 105

22 Status LEDs (Remote only) **106**
23 Troubleshooting **107**
23.1 Leak detection 107
23.2 Error codes 108
23.3 Error Indication (Remote only) 109
24 Technical support **110**
25 Drive maintenance **111**
26 Pumphead Replacement (qdos 30) **112**
26.1 Connecting interface tubing 115
27 Pumphead Replacement (qdos 20, 60 and 120) **117**
27.1 Connecting interface tubing 120
28 Ordering information **123**
28.1 Pump part numbers 123
28.2 Spares and accessories 124
29 Performance data **127**
29.1 Pumping conditions 127
29.2 Pressure capability 127
29.3 Dry running 127
29.4 Pumphead life 127
29.5 DC power supply option - input characteristics 127
29.6 Performance curves 128
30 Trademarks **129**
31 Publication history **130**

1 Declaration of conformity

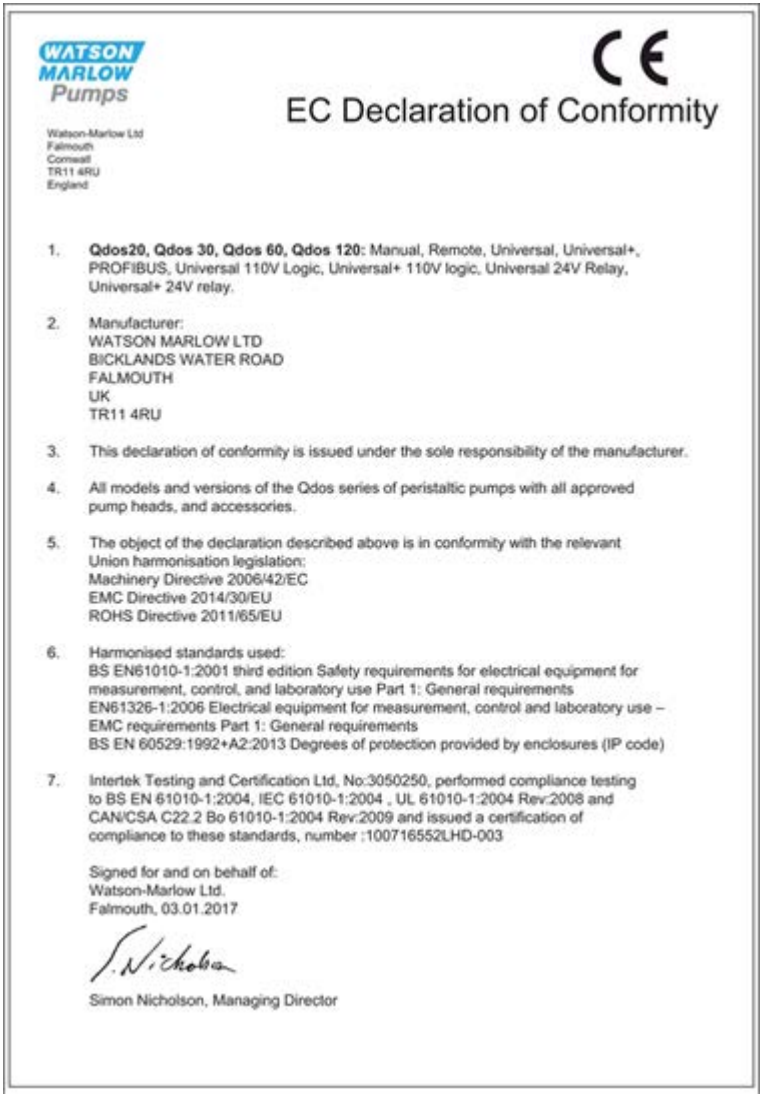

WATSON MARLOW Pumps

CE

EC Declaration of Conformity

Watson-Marlow Ltd
Falmouth
Cornwall
TR11 4RU
England

1. **Qdos20, Qdos 30, Qdos 60, Qdos 120:** Manual, Remote, Universal, Universal+, PROFIBUS, Universal 110V Logic, Universal+ 110V logic, Universal 24V Relay, Universal+ 24V relay.

2. Manufacturer:
   WATSON MARLOW LTD
   BICKLANDS WATER ROAD
   FALMOUTH
   UK
   TR11 4RU

3. This declaration of conformity is issued under the sole responsibility of the manufacturer.

4. All models and versions of the Qdos series of peristaltic pumps with all approved pump heads, and accessories.

5. The object of the declaration described above is in conformity with the relevant Union harmonisation legislation:
   Machinery Directive 2006/42/EC
   EMC Directive 2014/30/EU
   ROHS Directive 2011/65/EU

6. Harmonised standards used:
   BS EN61010-1:2001 third edition Safety requirements for electrical equipment for measurement, control, and laboratory use Part 1: General requirements
   EN61326-1:2006 Electrical equipment for measurement, control and laboratory use – EMC requirements Part 1: General requirements
   BS EN 60529:1992+A2:2013 Degrees of protection provided by enclosures (IP code)

7. Intertek Testing and Certification Ltd, No:3050250, performed compliance testing to BS EN 61010-1:2004, IEC 61010-1:2004 , UL 61010-1:2004 Rev:2008 and CAN/CSA C22.2 Bo 61010-1:2004 Rev:2009 and issued a certification of compliance to these standards, number :100716552LHD-003

Signed for and on behalf of:
Watson-Marlow Ltd.
Falmouth, 03.01.2017

Simon Nicholson, Managing Director

This pump is ETL listed: ETL control number 3050250. Cert to CAN/CSA std C22.2 No 61010-1. Conforms to UL std 61010A-1.

See "Pump specifications" on page 13.

2 Warranty

Watson-Marlow Limited ("Watson-Marlow") warrants this product to be free from defects in materials and workmanship for three years from the date of shipment, under normal use and service.

Watson-Marlow's sole responsibility and the customer's exclusive remedy for any claim arising out of the purchase of any product from Watson-Marlow is, at Watson Marlow's option: repair, replacement or credit, where applicable.

Unless otherwise agreed in writing, the foregoing warranty is limited to the country in which the product is sold.

No employee, agent or representative of Watson-Marlow has the authority to bind Watson-Marlow to any warranty other than the foregoing unless in writing and signed by a director of Watson-Marlow. Watson-Marlow makes no warranty of the fitness of its products for a particular purpose.

In no event:

i. shall the cost of the customer's exclusive remedy exceed the purchase price of the product;

ii. shall Watson-Marlow be liable for any special, indirect, incidental, consequential, or exemplary damages, however arising, even if Watson-Marlow has been advised of the possibility of such damages.

Watson-Marlow shall not be liable for any loss, damage, or expense directly or indirectly related to or arising out of the use of its products, including damage or injury caused to other products, machinery, buildings, or property. Watson-Marlow shall not be liable for consequential damages, including, without limitation, lost profits, loss of time, inconvenience, loss of product being pumped, and loss of production.

This warranty does not obligate Watson-Marlow to bear any costs of removal, installation, transportation, or other charges which may arise in connection with a warranty claim.

Watson-Marlow shall not be responsible for shipping damage of returned items.

2.1 Conditions

- Products must be returned by pre-arrangement to Watson-Marlow, or a Watson-Marlow approved service centre.
- All repairs or modifications must have been made by Watson-Marlow Limited, or a Watson-Marlow approved service centre or with the express permission in writing of Watson-Marlow, signed by a manager or director of Watson-Marlow.
- Any remote control or system connections must be made in accordance to Watson-Marlow recommendations.
- All PROFIBUS systems must be installed or certified by a PROFIBUS approved installation engineer.

2.2 Exceptions

- Consumable items including tubing and pumping elements are excluded.
- Pumphead rollers are excluded.
- Repairs or service necessitated by normal wear and tear or by lack of reasonable and proper maintenance are excluded.
- Products which, in the judgement of Watson-Marlow, have been abused, misused, or subjected to malicious or accidental damage or neglect are excluded.
- Failure caused by electrical surge is excluded.
- Failure caused by incorrect or sub-standard system wiring is excluded.
- Damage by chemical attack is excluded.
- Ancillaries such as leak detectors are excluded.
- Failure caused by UV light or direct sunlight.
- All ReNu pumpheads are excluded.
- Any attempt to disassemble a Watson-Marlow product will invalidate the product warranty.

Watson-Marlow reserves the right to amend these terms and conditions at any time.

3 When you unpack your pump

Unpack all parts carefully, retaining the packaging until you are sure all components are present and in good order. Check against the components supplied list, below.

3.1 Packaging disposal

Dispose of packaging materials safely, and in accordance with regulations in your area. The outer carton is made of corrugated cardboard and can be recycled.

3.2 Inspection

Check that all components are present. Inspect components for damage in transit. If anything is missing or damaged, contact your distributor immediately.

3.3 Components supplied

Qdos 20, 60 and 120:

Qdos 30:

Note: The appearance of the pump drive unit may vary from the that shown depending on the pump model. The hydraulic connector pack shown is an optional accessory.

The following components are supplied with all qdos pumps:

- Pump drive unit
- ReNu pumphead
- User connection collars
- The designated power cable (attached to the pump drive unit)
- CD-ROM containing these operating instructions
- Quick start manual
- Product safety information booklet

3.4 Optional accessories

Spares and accessories are available such as:

- Additional ReNu pumphead
- HMI protective cover (not compatible with remote models)
- Interface tubing
- Input and output (I/O) leads
- Hydraulic connector packs

For a full list of accessories see "Spares and accessories" on page 124.

3.5 Storage

This product has an extended shelf life. However, care should be taken after storage to ensure that all parts function correctly. Please observe the storage recommendations and use-by dates which apply to ReNu pumpheads and tubing you may wish to bring into service after storage.

4 Information for returning pumps

In compliance with the UK Health and Safety at Work Act and the Control of Substances Hazardous to Health Regulations, you are required to declare the substances which have been in contact with product(s) you return to Watson-Marlow or its subsidiaries or distributors. Failure to do so will cause delays. Please ensure that you fax us this form and receive an RGA (Returned Goods Authorisation) before you despatch the product(s). A copy of this form must be attached to the outside of the packaging containing the product(s).

Please complete a separate decontamination declaration for each product. A copy of the appropriate decontamination declaration can be downloaded from the Watson-Marlow website at: www.wmftg.com/decon.

You are responsible for cleaning and decontaminating the product(s) before return.

5 Safety notes

In the interests of safety, this pump and pumphead should only be used by competent, suitably trained personnel after they have read and understood this manual, and considered any hazard involved. If the pump is used in a manner not specified by Watson-Marlow Limited, the protection provided by the pump may be impaired.

Any person who is involved in the installation or maintenance of this equipment should be fully competent to carry out the work. In the UK this person should also be familiar with the Health and Safety at Work Act 1974.

This symbol, used on the pump and in this manual, means: Caution, refer to accompanying documents.

This symbol, used on the pump and in this manual, means: Do not allow fingers to contact moving parts.

This symbol, used on the pump and in this manual, means: Caution, hot surface.

Fundamental work with regard to lifting, transportation, installation, starting-up, maintenance and repair should be performed by qualified personnel only. The unit must be isolated from mains power while work is being carried out. The motor must be secured against accidental start-up.

There is a non-replaceable fuse on the switch-mode power supply board. In some countries, the mains power plug contains a replaceable fuse. There are no user-serviceable fuses or parts inside this pump.

This pump must be used only for its intended purpose.

The pump must be accessible at all times to facilitate operation and maintenance. Access points must not be obstructed or blocked. Do not fit any devices to the drive unit other than those tested and approved by Watson-Marlow. Doing so could lead to injury to persons or damage to property for which no liability can be accepted.

If hazardous fluids are to be pumped, safety procedures specific to the particular fluid and application must be put in place to protect against injury to persons.

This product does not comply with the ATEX directive and must not be used in explosive atmospheres.

If pumping flammable liquids, a full risk assessment should be completed prior to use.

The exterior surfaces of the pump may get hot during operation. Do not take hold of the pump while it is running. Allow the pump to cool after use before handling. The drive unit must not be run without a pumphead fitted. The pumphead should not be run dry for extended periods of time. The pump should not be used to pump fluids where the temperature of the fluid can reach temperatures of more than 70°C.

Ensure the chemicals to be pumped are compatible with the pumphead, lubricant, tubing, pipework and fittings to be used with the pump. Please refer to the chemical compatibility guide which can be found at: www.wmpg.com/chemical If you need to use the pump with any other chemical please contact Watson-Marlow to confirm compatibility

Operation of the pump after failure of the consumable peristaltic tube may result in a flow of chemicals to the inside of the pumphead. Some aggressive chemicals are not compatible with the pumphead materials. These aggressive chemicals will react to the matierials internal to the pumphead and may cause leaks.

In the worst case, chemicals could leak out from the pumphead and attack the drive shaft and lip seal, damaging the seal integrity. Damage to the seal could cause aggressive chemicals to enter the pump housing and react wth the components internal to the pump housing. The reaction may produce explosive gases inside the pump housing.

Danger of damage to pump and possible risk of explosion if dosing liquid has entered the pump housing.

To prevent dosing liquid entering the pump housing follow the recommended actions below.

In the event of tube failure the pump should be isolated from both electrical and hydraulic supplies prior to pumphead replacement (See "Pumphead Replacement (qdos 30)" on page 112 or "Pumphead Replacement (qdos 20, 60 and 120)" on page 117.)

To prevent damage to the pump and pumphead due to failure of the consumable peristaltic tube:

- change the pumphead shortly after failure
- install a non return valve in the discharge line close to the pump when pumping against a positive pressure. This will prevent a constant stream of chemical flowing back into the pumphead after failure
- consider using an electrical interlock to isolate the power to the pump, this can be controlled by the pump alarm signal when a leak is detected by the pump
- do not disable the pump leak detection system
- change the pumphead prior to failure when pumping very aggressive chemicals that are not compatible with the pumphead materials. There are volume and hours counters in the product to provide indication of consumable life.

6 Pump specifications

qdos 20, 60 and 120:

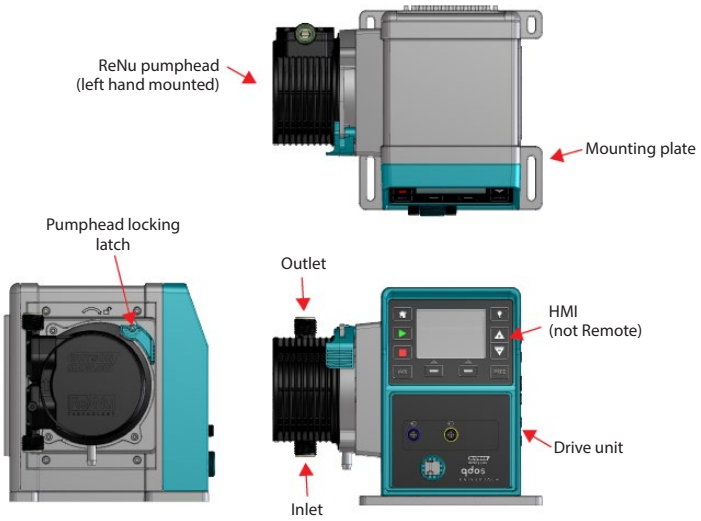

qdos 20, 60 and 120 with relay module:

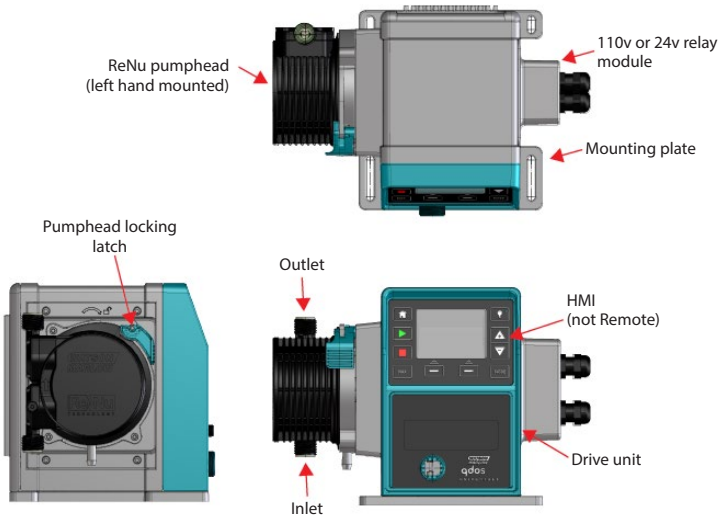

qdos 30:

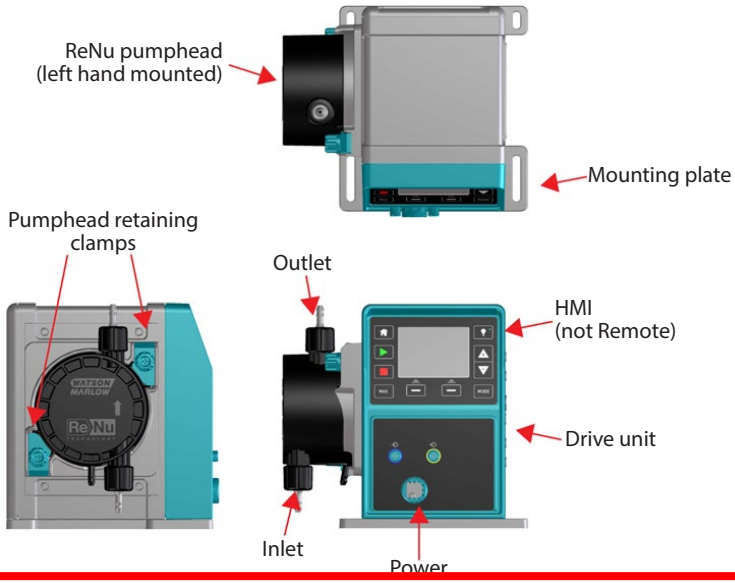

qdos 30 with 110v or 24v relay module:

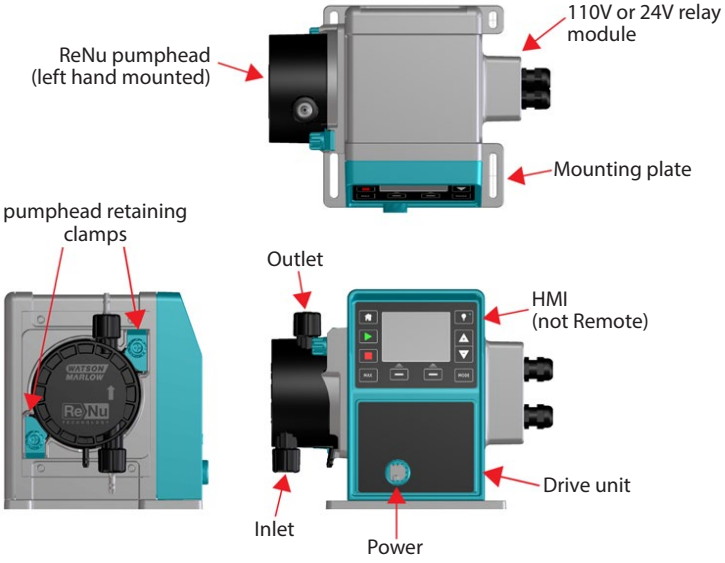

A nameplate is fixed to the rear of the pump. It contains manufacturer and contact details, product reference number, serial number and model details.

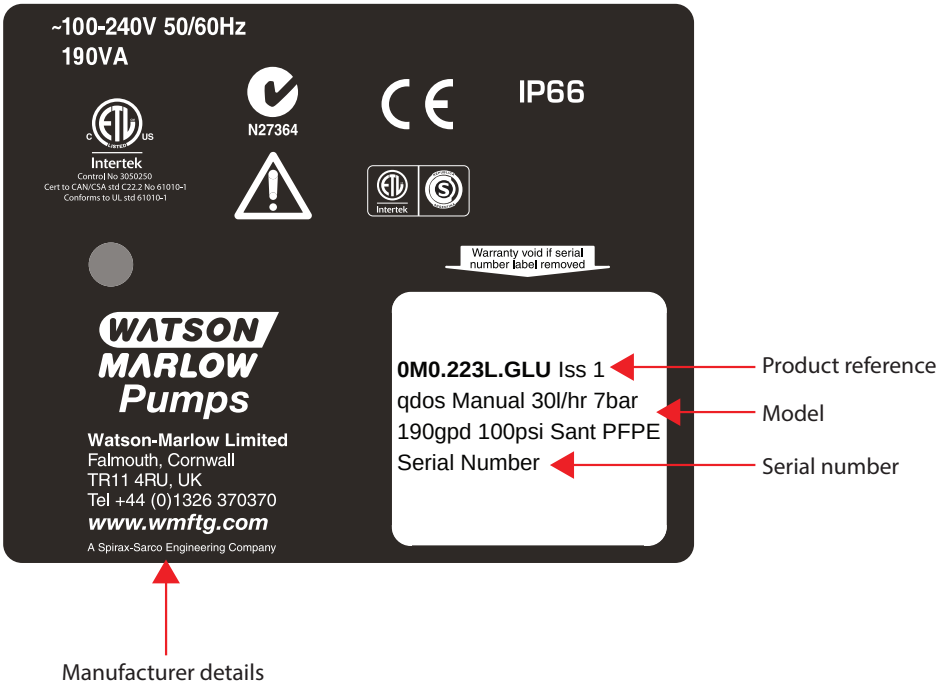

6.1 Pump specifications

Flow Range (flow control)	**Manual, PROFIBUS, Universal and Universal+:** qdos120:0.1-2000 ml/min (20000:1) qdos60:0.1-1000 ml/min (10000:1) qdos30:0.1-500 ml/min (5000:1) qdos20:0.1-333 ml/min (3330:1) **Remote:** qdos120:1.25-2000 ml/min (1600:1) qdos60:0.6-1000 ml/min (1600:1) qdos30:0.3-500 ml/min (1600:1) qdos20:0.2-333 ml/min (1600:1)
AC Supply voltage/frequency	~100-240V 50/60Hz

AC Power consumption	190VA
DC Supply voltage/frequency (12/24VDC power option)	12-24V DC
DC Power consumption (12/24VDC power option)	150W
Installation category (overvoltage category)	II
±10% of nominal voltage. Maximum voltage fluctuation	An electrical mains supply is required along with cable connections to the best practice of noise immunity
Enclosure rating	IP66 to BS EN 60529 NEMA 4X to NEMA 250*
Operating temperature range	4°C to 45°C, 41°F to 113°F
Storage temperature range	-20°C to 70°C, -4°F to 158°F
Maximum altitude	2,000m, 6,560ft
Humidity (non-condensing)	80% up to 31°C, 88°F, decreasing linearly to 50% at 40°C, 104°F
Pollution degree	2
Noise	<70dB(A) at 1m

*Requires the fitting of the HMI protective cover.

6.2 Standards (AC mains power supply)

EC Harmonised standards	Safety requirements for electrical equipment for measurement, control and laboratory use: BS EN 61010- 1 incorporating A2 Category 2, Pollution degree 2
	Degrees of protection provided by enclosures (IP code): BS EN 60529 amendments 1 and 2
	EN61326-1:2006 Electrical Equipment for measurement control and laboratory use EMC requirements Part 1

Other Standards	UL 61010A-1, UL/CSA 61010-1
	CAN/CSA-C22.2 No 61010-1
	IEC 61010-1
	Radiated emissions FCC 47CFR, Part 15
	NEMA 4X to NEMA 250
	NSF61 for pumphead

6.3 Standards (12-24V DC power supply)

EC Harmonised standards	Safety requirements for electrical equipment for measurement, control and laboratory use: BS EN 61010- 1 incorporating A2 Category 2, Pollution degree 2
	Degrees of protection provided by enclosures (IP code): BS EN 60529 amendments 1 and 2
	EN61326-1:2006 Electrical Equipment for measurement control and laboratory use EMC requirements Part 1
Other Standards	UL 61010A-1, UL/CSA 61010-1
	CAN/CSA-C22.2 No 61010-1
	IEC 61010-1
	Radiated/conducted emissions FCC 47CFR, Part 15
	NEMA 4X to NEMA 250
	NSF61 for pumphead

6.4 Dimensions

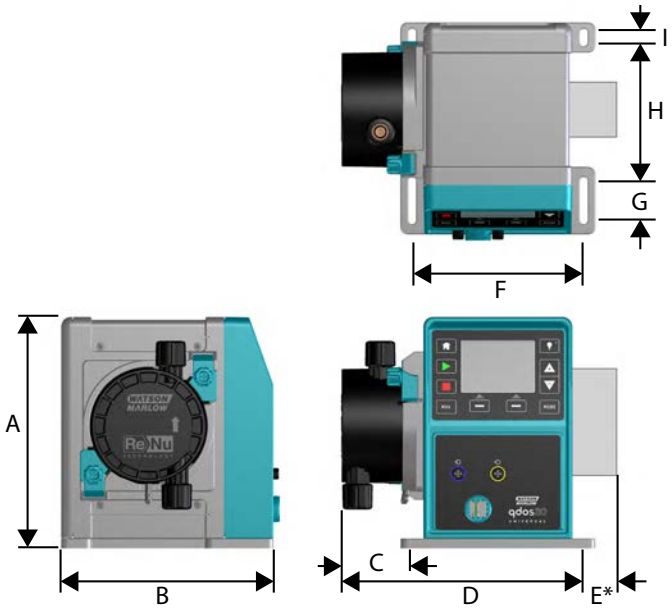

Dimension	qdos20	qdos30	qdos60	qdos120
A	234mm (9.2”)	234mm (9.2”)	234mm (9.2”)	234mm (9.2”)
B	214mm (8.4”)	214mm (8.4”)	214mm (8.4”)	214mm (8.4”)
C	118mm (4.6”)	82.5mm (3.2”)	118mm (4.6”)	118mm (4.6”)
D	266mm (10.5”)	233mm (9.2”)	266mm (10.5”)	266mm (10.5”)
E*—Optional relay modules (H or R)	43mm (1.7”)	43mm (1.7”)	43mm (1.7”)	43mm (1.7”)
F	173mm (6.8”)	173mm (6.8”)	173mm (6.8”)	173mm (6.8”)
G	40mm (1.6”)	40mm (1.6”)	40mm (1.6”)	40mm (1.6”)
H	140mm (5.5”)	140mm (5.5”)	140mm (5.5”)	140mm (5.5”)
I	10mm (0.4”)	10mm (0.4”)	10mm (0.4”)	10mm (0.4”)

6.5 Weights

qdos20, 60 and 120:

Model	Drive		Drive with pumphead	
	kg	lb	kg	lb
Manual	4.6	10lb 2oz	5.7	12lb 9oz
Remote	4.5	9lb 15oz	5.6	12lb 6oz
Universal	4.6	10lb 2oz	5.7	12lb 9oz
Universal+	4.6	10lb 2oz	5.7	12lb 9oz
PROFIBUS	4.6	10lb 2oz	5.7	12lb 9oz
Universal 24V relay	4.8	10lb 9oz	5.9	13lb 0oz
Universal+ 24V relay	4.8	10lb 9oz	5.9	13lb 0oz
Universal 110V relay	4.8	10lb 9oz	5.9	13lb 0oz
Universal+ 110V relay	4.8	10lb 9oz	5.9	13lb 0oz

qdos30:

Model	Drive		Drive with pumphead	
	kg	lb	kg	lb
Manual	4.1	9lb	5.05	11lb 2oz
Remote	4.0	8lb 13oz	4.95	10lb 15oz
Universal	4.1	9lb	5.05	11lb 2oz
Universal+	4.1	9lb	5.05	11lb 2oz
PROFIBUS	4.1	9lb	5.05	11lb 2oz
Universal 24V relay	4.3	9lb 8oz	5.25	11lb 9oz
Universal+ 24V relay	4.3	9lb 8oz	5.25	11lb 9oz
Universal 110V relay	4.3	9lb 8oz	5.25	11lb 9oz
Universal+ 110V relay	4.3	9lb 8oz	5.25	11lb 9oz

7 Good pump installation practice

7.1 General recommendations

Always consult an expert before installing a metering pump in a specialised system. Metering pumps should be maintained by qualified persons.

The pump must be bolted to a flat, horizontal, rigid surface, free from excessive vibration, to ensure correct lubrication of the gearbox and correct pumphead operation. Allow a free flow of air around the pump to ensure that heat can be dissipated. Ensure that the ambient temperature around the pump does not exceed 45°C (113°F).

The STOP key on pumps supplied with a keypad will always stop the pump. However, it is recommended that a suitable local emergency stop device is fitted into the mains supply to the pump.

Do not stack pumps.

This pump is self-priming and self-sealing against backflow. No valves are required in inlet or discharge lines, except as described below. Valves in the process flow must be opened before the pump operates.

Users must fit a non-return valve between the pump and the discharge pipework to avoid the sudden release of pressurised fluid in the event of a pumphead failure. This shall be fitted immediately after the discharge of the pump.

qdos is a positive displacement pump; therefore, it is recommended best practice that customers incorporate discharge pressure relief in their piping system. Failure to fit a pressure release valve in the discharge pipework will result in excessive build up of pressure should the discharge become blocked. This may present a safety risk, may cause damage to the system pipework or lead to premature failure of the pumphead. The pressure relief valve shall be rated at no more than 10 bar. It shall always be rated at below the users system maximum operating pressure. It shall be installed so as to provide easy access for maintenance, inspection and repair. It shall not be capable of being adjusted without the use of a tool. The discharge opening must be located and directed so that the release material is not directed towards any person and will not deposit on parts that could cause a hazard. There must not be a shut-off valve between the overpressure safety device and the pump.

Do not block the drain port of the ReNu pumphead.

Ensure the chemicals to be pumped are compatible with the pumphead and the pipework and fittings to be used with the pump. Please refer to the chemical compatibility guide which can be found at: www.wmftg.com/chemical. If you need to use the pump with any other chemical please contact Watson-Marlow to confirm compatibility.

7.2 Do's and do not's

Do not build a pump into a tight location without adequate airflow around the pump.

Do keep delivery and suction tubes as short and direct as possible - though ideally not shorter than one metre - and follow the straightest route. Use bends of large radius: at least four times the tubing diameter. Ensure that connecting pipework and fittings are suitably rated to handle the predicted pipeline pressure. Avoid pipe reducers and lengths of smaller bore tubing than the pumphead section, particularly in pipelines on the suction side. Any valves in the pipeline must not restrict the flow. Any valves in the flow line must be open when the pump is running.

Do use suction and delivery pipes with the largest diameter bore tube that will fit with your process, especially when pumping viscous product. Care should be taken when pumping solids in suspension as large bore tubes will reduce the fluid velocity, this may lead to solids dropping out of suspension.

Do site the pump at or just below the level of the fluid to be pumped if possible. This will ensure flooded suction and maximum pumping efficiency.

Do run at slow speed when pumping viscous fluids. Flooded suction will enhance pumping performance, particularly for materials of a viscous nature.

Do recalibrate after changing pumphead, fluid, or any connecting pipework. It is also recommended that the pump is recalibrated periodically to maintain accuracy.

Do ensure your PROFIBUS pump is installed in accordance with PROFIBUS installation guidelines.

Do not pump any chemical not compatible with the pumphead.

Do not tilt the drive with a pumphead fitted, even if it is not running.

Do not strap the control and mains cable together.

Do avoid tight bends in the PROFIBUS signal cable.

7.3 Pressure capability

qdos120 can be operated continuously at discharge pressures of up to 4 bar (60psi)

qdos20, qdos30 and qdos60 can be operated continuously at discharge pressures of up to 7 bar (100psi).

qdos30 can be operated at discharge pressures of up to 10 bar (145 psi), however flowrate and pumphead life will be affected.

7.4 Dry running

qdos will continue to operate when there is gas present in the suction line and will maintain prime in these conditions. The pump can be run dry, however flow rate and pumphead life will be affected.

8 Connecting to a power supply

8.1 AC mains power supply

This pump is fitted with a switch mode power supply and will operate from any mains voltage in the range ~100-240V AC, 50/60Hz supplies.

Make suitable connection to an earthed, single-phase mains electricity supply.

We recommend using commercially available supply voltage surge suppression where electrical noise may be present.

Power cable: The pump is supplied fitted with a cable gland and approximately 2.8m (9.2ft) of power cable. The cable is not user-detachable and the entry gland at the front of the pump should not be disassembled.

Each pump is supplied with a power cable. The connector at the pump end of the cable is IP66 rated. The mains plug at the opposite end of the cable is NOT IP66 rated.

Ensure that all power supply cables are adequately rated for the equipment.

The pump must be positioned so that the disconnection device (the mains plug), is easily accessible when the equipment is in use.

When PAT testing this unit ensure that the earth bond test terminal is used. Do not use the motor shaft as this could result in motor bearing damage and reduce long term reliability.

Earth bond test terminal position

8.2 DC power supply option

The range of DC sources is intended to include:

- Automotive—either mobile, such as trailer mounted, or static, such as a vehicle battery or auxiliary output
- Conventional DC supplies derived from AC mains, such as 12V or 24V supplies powering PLCs
- Solar panels with any type of back-up battery within the input range
- Other renewable energy generators such as wind/hydro turbines with any type of back up battery within the input range

Power cable: The pump is supplied fitted with a cable gland and approximately 2.0m (6.6ft) of power cable and an IP31 splash proof blade fuse holder and 20A blade fuse. The cable is not user-detachable and the entry gland at the front of the pump should not be disassembled.

Notes

It is highly recommended that an isolating switch is provided between the power source and the pump. The cable is fitted with M8 ring terminals to fit common isolators.

The 20A blade fuse is a safety device and should not be removed or the value changed.

The fuse holder is splashproof (IP31) but NOT waterproof (IP66). Connection to the DC source should be provided with appropriate IP protection.

Large start up currents may be required, especially at low voltages, see "Performance data" on page 127 for correct selection of power source.

We **DO NOT** recommend increasing the cable length when used in 12V systems due to extra voltage loss in the cable. Increasing cable length will also invalidate the pumps EMC compliance and require the user to perform their own system level EMC compliance check.

9 Start-up check list

- Fit the pumphead to the drive. (See "Pumphead Replacement (qdos 30)" on page 112 or "Pumphead Replacement (qdos 20, 60 and 120)" on page 117)
- Ensure the pumphead ports are securely fitted to the interface tubing.
- Ensure proper connection has been made to a suitable power supply.
- Ensure that the general recommendations are followed (see "General recommendations" on page 20).

10 Automatic control wiring - Universal, Universal+ and Remote models without relay modules

Interfacing the pump with other devices is by means of two IP66 rated five pole M12 connectors mounted on the front of the pump. M12 connectors with flying lead cables can be purchased as an accessory from Watson-Marlow. The function of each of the leads is labelled.

It is the user's responsibility to ensure the safe and reliable operation of the pump under remote and automatic control.

Never apply mains power to the five pole M12 connectors. Apply the correct signals to the pins, as shown below. Limit signals to the maximum values shown. Do not apply voltage across other terminals. Permanent damage may result.

All input and output terminals are separated from mains circuits by reinforced insulation. These terminals must only be connected to external circuits that are also separated from mains voltages by reinforced insulation as a minimum requirement.

10.1 Input pin assignments at the pump

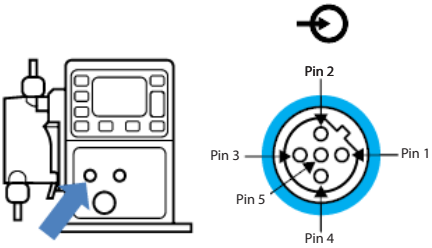

Pin No.	Function	Specification	Referenced to	Input lead colour
1	Run/stop	Min. 5V, max.30V	Connect 5-24V DC supply to stop (referenced to pin 4). Alternatively, connect pin 5 of the output connector to this pin via normally open switch.	Brown
2	External Contact Reserved	Min. 5V, max .30V	Pulse 5-24V 40ms minimum pulse length (referenced to pin 4). Alternatively, connect pin 5 of the output to this pin via normally open switch.	White
3	4-20mA	250Ω input impedance 40mA max. current 250Ω load resistance 40mA max.current	Referenced to GND	Blue
4	GND	Ground (0V)		Black
5	Remote fluid recovery	Min. 5V, max. 30V	Connect 5-24V DC supply to reverse the pump in analog mode	Grey

10.2 Optional input lead

Input lead length: 3m (10ft)

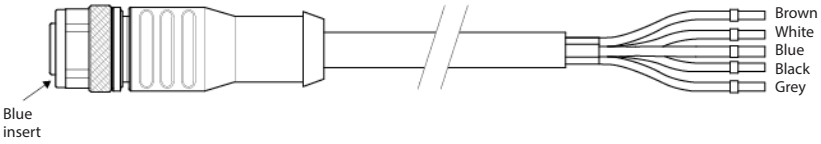

Remote stop

Depending on the polarity set in the control settings menu, applying a 5V to 24V signal to pin 1 will STOP the pump in all operating modes. In manual and analogue mode, the pump will start when the signal is removed. The user can reconfigure this input in the control settings menu so that the pump will run when the signal is applied and stop when there is no signal to pin 1.

The MAX key will work in manual mode regardless of the remote STOP input. This enables priming without having to change pump settings or disconnect the input cable.

External contact—Universal and Universal+ models only

Digital pulse input min. 5V, min. pulse duration 40ms maximum duration 1000ms. This input is used to trigger a user defined dose size. Refer to the contact mode section.

Speed: analog input

The speed of this pump can be controlled remotely by a current analog signal within the range 4-20mA.

The analog signal must be applied to pin three of the M12 input connector. The pump will provide an increasing speed for a rising control signal.

The Universal+ model can be calibrated by the user to control the speed proportionally or inversely proportional to the input mA signal.

4-20mA circuit impedance: 250Ω.

Do not invert the polarity of the terminals. If the polarity is inverted the motor will not run.

Remote fluid recovery

The user can reverse the pump remotely by supplying a signal to pin five.

10.3 Output pin assignments at the pump

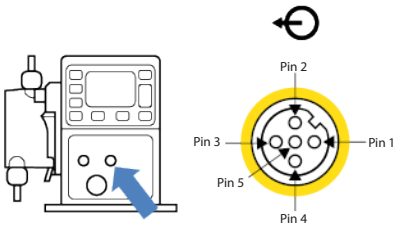

Pin No.	Function	Specification	Output lead colour
1	Run status output	Open collector output uncommitted	Brown
2	Alarm output	Open collector output uncommitted	White

Pin No.	Function	Specification	Output lead colour
3	Analog out	4-20mA into 250Ω (referenced to pin 4)	Blue
4	GND		Black
5	Supply	Pin 5 supply voltage is 5V with impedance of 2.2k, this can be connected via a NO switch to input pin 1 or 2 to power the inputs.	Grey

Example wiring for a "pull up resistor"

Diagram depicts either Alarm or Run Stop output.

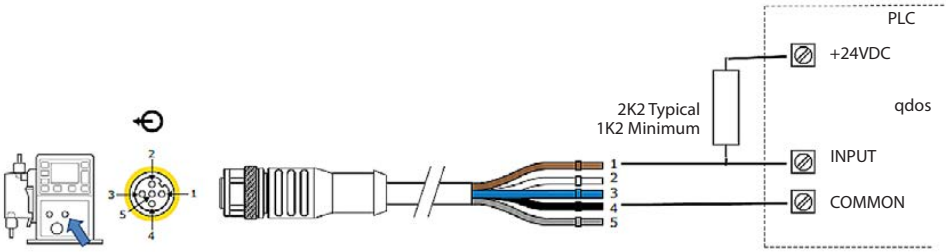

Example wiring for an external relay, the N/O or N/C contacts could be used for any device

Diagram depicts either Alarm or Run Status output.

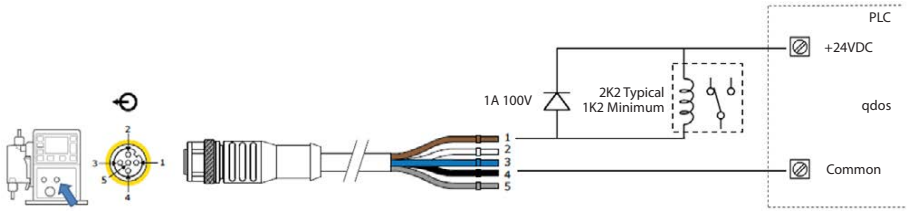

The resistor or relay needs to be sized correctly to ensure no damage to the pump transistors. Damage incurred due to incorrect sizing or installation will not be covered by warranty.

These solutions require external 24V power. If connecting to a PLC 24V is usually available.

Alarm Output (Output 1)

Alarm conditions are generated by system errors or leak detection.

Run Status Output (Output 2)

This output changes state when the motor starts/stops.

Speed: analog output—Universal+ and Remote models only

A current analog signal within the range 4-20mA into 250Ω impedance is available between pin three and pin four of the output connector. The current is fixed and directly proportional to the pumphead rotation speed. 4mA = zero speed; 20mA = maximum speed.

On the Universal+ version there is also an option to match the scale of the 4-20mA input if this has been reconfigured by the user. This option is available in the Control settings menu.

Note: If the mA output is to be used for reading from a multimeter, a 250Ω resistor is required in series.

10.4 Optional output lead

Output lead length: 3m (10ft)

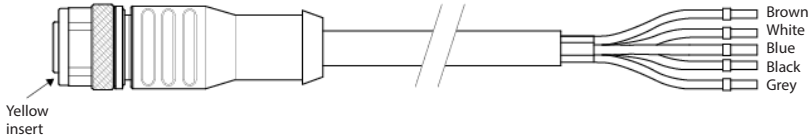

11 Automatic control wiring - 24V relay module and 110V relay module (Universal and Universal+ only)

The pump can be connected with other devices by means of the screw-terminal connectors within the relay module situated on the side of the pump. The relay module must be removed from the pump housing to allow suitable cables to be connected to the terminal connectors via the watertight cable glands on the module. The pump can be supplied with either a 24V or 110V relay module. Please confirm whether your relay module is 24V or 110V before wiring the module.

11.1 Module: cover removal and refitting

The pump can be connected with other devices by means of the screw-terminal connectors within the relay module situated on the side of the pump. The relay module must be removed from the pump housing to allow suitable cables to be connected to the terminal connectors via the watertight cable glands on the module.

Removing the relay module cover

The module cover is secured to the side of the drive unit by four M3x10 Pozidriv pan head stainless steel screws.

Remove the four screws from the module cover, leaving the top left screw until last. It is possible that the sealing strip may cause the module to adhere to the drive housing. If so a gentle tap will free it. **Do not** use a tool to force it off.

The sealing strip should be retained within its channel on the side panel of the drive housing. It ensures ingress protection between the drive housing and the module cover. Check the integrity of the sealing strip. If it is damaged it must be replaced.

Ensure the sealing strip is undamaged and positioned within its channel on the side of the drive housing. Hold the module cover in place, taking care not to disturb the sealing strip. Starting with the top left screw, tighten the four retaining screws to 2.5Nm.

Ensure that the relay module cover is correctly secured at all times by all four screws. Failure to do so may compromise the IP66 (NEMA 4X) protection.

11.2 Wiring up the terminal connectors

It is the user's responsibility to ensure the pump's safe and reliable operation under remote and automatic control.

Cable entry to the module is via two watertight cable glands on the module cover. These may be fitted in place of the sealing plugs which are fitted to the side of the module cover when the pump is shipped.

The number of glands needed depends on the number of connection cables required and the convenience of the installer. As standard, two ½" cable glands are provided with the pump.

Recommended control cable conductors for the terminal blocks: metric = 0.14sq mm - 2.5sq mm solid and 0.14sq mm - 1.5sq mm stranded. USA = 26AWG - 14AWG solid and 26AWG - 16AWG stranded. Cable: circular. Max/min outside diameter to ensure a seal when passed through the standard gland: 9.5mm-12mm. **The cable section must be circular to ensure a seal.**

For EMC protection, shielded control cable should be used. The shielding should be terminated to either of the provided spade connections.

Cables should have a minimum temperature rating of 85°C.

Note: For 24V modules, screened, circular control cable up to 12 core must be used. For 110V modules, screened, circular control cable up to 25 core must be used. The cable screen must be earthed at both ends of the cable.

Suitable cables for general-purpose use: 300V with extra premium grade PVC jacket with good flame and moisture resistance.

Suitable cables for industrial use: 300V extra-rugged polyurethane grade jacket with resistance to oils, fuels, solvents and water.

For convenience of wiring more than 8 conductors per cable may be awkward to handle.

1. Use a suitable 21mm spanner to unscrew the sealing plugs.

2. Screw in the supplied ½" NPT cable glands complete with new sealing washers in place of the plug, ensuring that the retaining nut is properly seated.

3. Tighten the gland to 2.5Nm using a suitable 21mm spanner, to ensure a seal. If a different gland is used, it must be watertight to IP66.

3. Loosen the gland cap (do not remove it) and pass the cable in through the gland. When it has passed through the gland, continue to push the cable through.
4. Pull through sufficient cable to reach the connectors required, leaving a little slack.
5. Strip the outer sheath as necessary and remove 5mm of insulation from the conductors. No tinning or ferrule is required.

   Note: If very stiff or large-diameter cable is used, it may be convenient to strip the outer sheath before passing the cable's conductors through the gland. However, to ensure a watertight seal, the cable must have an undamaged sheath within the gland when it is tightened.

6. Prepare the cable screen(s) by twisting a suitable length. The twisted length(s) shall ideally be sleeved to prevent shorting.
7. Secure the end of the cable screen to the Faston receptacles on the spade connectors provided.
8. Push the bared conductor into the square hole in the connector. When the conductor is fully inserted, tighten the retaining screw to secure it in place.

Ensure that multi strand wires are terminated with a crimp, suitable for the wire diameter. Failure to do so may result in electric shock.

9. When all conductors are in position replace the module cover.
10. Using a 21mm spanner tighten the gland cap to 2.5Nm to ensure a watertight seal. Alternatively, tighten the gland by hand until it is finger-tight and use a spanner to tighten it further by one-half a turn.

Ensure that unused openings on the module are sealed using the blanking plugs provided. Failure to do so will result in loss of ingress protection.

11.3 24V relay module pcb connectors

As you look at the module the pcb will appear in the same orientation as shown in the diagram below.

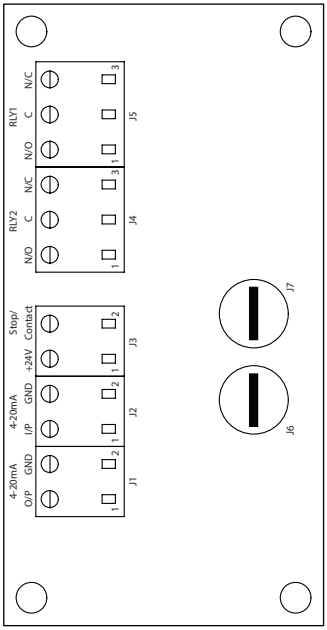

Never apply mains power to the 4-20mA input, 4-20mA output,+24VDC or stop contact terminals. Apply the correct signals to the terminals shown below. Limit signals to the maximum values shown. Do not apply voltage across other terminals. Permanent damage, not covered by warranty, may result. The maximum load on the relay contacts of this pump is 110VAC 5A or 30VDC 5A.

Alarm output (J5)

Connect the output device to the C (common) terminal of the relay connector and either the N/C (normally closed) or N/O (normally open) terminal as required.

This relay coil is energised when the pump has an alarm condition.

Note: Alarm conditions are generated by system errors. This alarm will not be operated for analogue signal errors.

The default for Relay 1 is Alarm, on universal+ models this output (1) can be configured in the control settings menu.

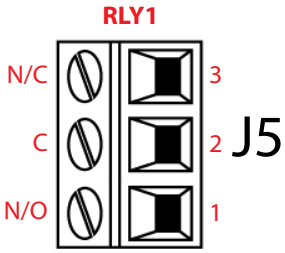

Run status output (J4)

Connect the output device to the C (common) terminal of the relay connector and either the N/C (normally closed) or N/O (normally open) terminal as required.

This relay coil is energised when the pump is running.

The default for Relay 2 is run status, on universal+ models this output (2) can be configured in the control settings menu.

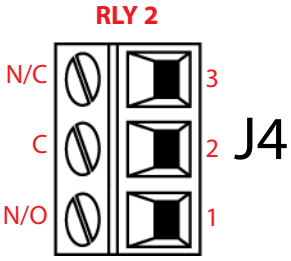

Configurable remote stop or contact input - J3

If Analog 4-20mA mode is selected then terminal J3 will be configured as a remote stop automatically.

If Contact mode is selected then the input J3 will be configured as a contact input automatically.

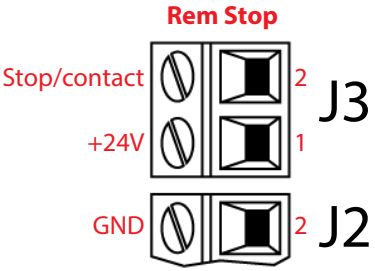

Remote Stop

Connect a remote switch between the **Stop/Contact** terminal and the **+24V** terminal of the Run/Stop I/P connector (J3). Alternatively a 24V logic input may be applied to the Stop/Contact terminal, ground to the GND terminal of the adjacent 4-20mA I/P connector (J2).

The sense of the remote stop input can be configured in software using the control settings menu.

Remote stop is operational in manual and analog mode.

Contact

To operate the pump in contact mode the remote stop input should be set to "High".

Speed: analog input (J2)

The analog process signal must be applied to the I/P terminal of the Analog connector (J2). Ground to the GND connector of the same terminal. In Analog mode the pump set speed will be proportional or inversely proportional to the analog input.

4-20mA circuit impedance: 250Ω.

Max current 40mA

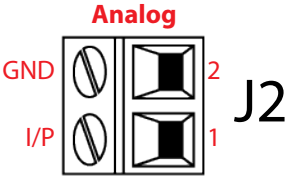

Note: inverting the signal response is set up in software. Do not invert the polarity of the terminals.

See also "Analog 4-20mA mode (Universal and Universal+ only)" on page 67 and "Calibrate the pump for 4-20mA control (Universal+ only)" on page 72.

Speed: analogue output (J1) (Universal+ only)

A current analogue signal within the range 4-20mA is available between the O/P (output) terminal and the GND terminal. The current is fixed and directly proportional to the pump speed. 20mA = maximum speed, 4mA = zero speed.

There is also an option to match the scale of the 4-20mA input if this has been reconfigured by the user. This option is available in the Control settings menu.

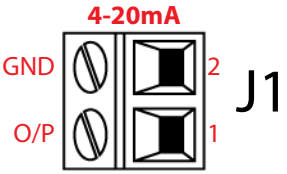

Note: If the mA output is to be used for reading from a multimeter (set on mA), a 250Ω resistor is required in series.

Earth shielding terminals

4.8mm spade terminals are supplied for earth shielding of cables. The input cable and output cable earths can be connected to either terminal.

Keep 4-20mA and low voltage signals separate from mains power. Use separate glanded input cables.

11.4 110V relay module pcb connectors

As you look at the module the pcb will appear in the same orientation as shown in the diagram below.

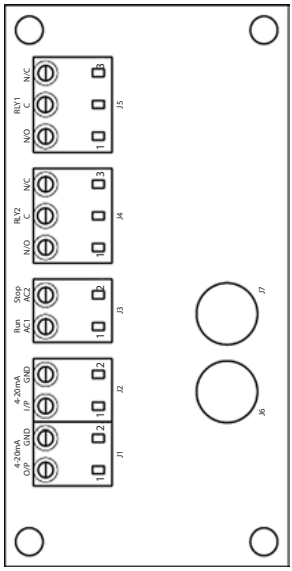

Apply the correct signals to the terminals shown below. Limit signals to the maximum values shown. Do not apply voltage across other terminals. Permanent damage, not covered by warranty, may result. The maximum load on the relay contacts of this pump is 115VAC; max current 5A. Voltages do not require transformer isolation. The relays are specified to switch 115VAC mains powered loads. These relay outputs are not suitable for 24VDC logic signals.

Alarm output (J5)

Connect the output device to the C (common) terminal of the relay connector and either the N/C (normally closed) or N/O (normally open) terminal as required.

This relay coil is energised when the pump has an alarm condition.

Note: Alarm conditions are generated by system errors. This alarm will not be operated for analogue signal errors.

The default for Relay 1 is Alarm, on universal+ models this output (1) can be configured in the control settings menu.

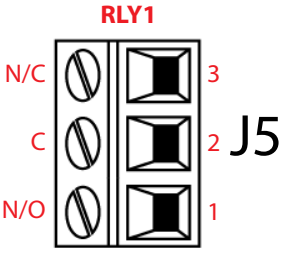

Run status output (J4)

Connect the output device to the C (common) terminal of the relay connector and either the N/C (normally closed) or N/O (normally open) terminal as required.

This relay coil is energised when the pump is running.

The default for Relay 2 is run status, on universal+ models this output (2) can be configured in the control settings menu.

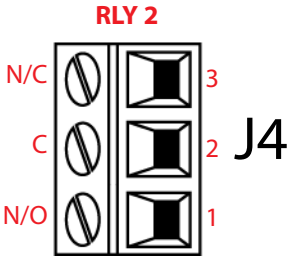

Remote stop input (J3)

Apply a signal of 85VAC to 130VAC across terminals AC1 and AC2 to stop the pump. Polarity is not important.

The pump will not run while this signal is applied. In manual and analog mode, the pump will start when the signal is removed.

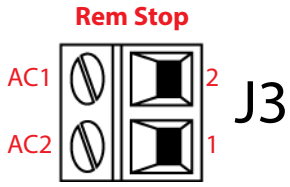

Speed: analog input (J2)

The analog process signal must be applied to the I/P terminal of the Analog connector (J2). Ground to the GND connector of the same terminal. In Analog mode the pump set speed will be proportional or inversely proportional to the analog input.

4-20mA circuit impedance: 250Ω.

Max current 40mA

Note: inverting the signal response is set up in software. Do not invert the polarity of the terminals.

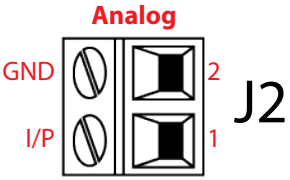

Speed: analogue output (J1) (Universal+ only)

A current analogue signal within the range 4-20mA is available between the O/P (output) terminal and the GND terminal. The current is fixed and directly proportional to the pump speed. 20mA = maximum speed, 4mA = zero speed.

There is also an option to match the scale of the 4-20mA input if this has been reconfigured by the user. This option is available in the Control settings menu.

Note: If the mA output is to be used for reading from a multimeter (set on mA), a 250Ω resistor is required in series.

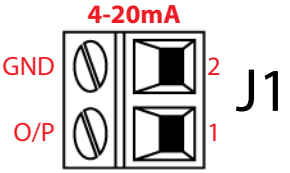

Earth shielding terminals

4.8mm spade terminals are supplied for earth shielding of cables. The input cable and output cable earths can be connected to either terminal.

4-20mA and low voltage signals separate from mains power. Use separate glanded input cables

12 PROFIBUS control wiring

Interfacing the pump with the PROFIBUS network is by means of an M12 connector mounted on a flying lead on the front of the pump.

It is the user's responsibility to ensure the safe and reliable operation of the pump under PROFIBUS control.

Note: The transmission speed is limited to a maximum of 1.5Mbit/s.

12.1 PROFIBUS installation

All devices in the bus system must be connected in a line. An IP66 rated T adaptor should be used to connect the pump to the PROFIBUS line. A maximum of 32 stations (to include master, slaves and repeaters) are possible and both the beginning and the end of the cable must be terminated with a terminating resistor.

The M12 socket provided for PROFIBUS installation is IP66 rated. To maintain an IP66 rated system, the PROFIBUS cable, T adaptors and terminating resistors used must be fitted with IP66 rated M12 industrial connectors.

Note: To prevent low-frequency ground loops, screening which is earthed at one end should be used. To counter magnetic HF pick-up, shielding earthed at both ends as well as twisted conductors should be used, this will have no effect against electrical HF pick-up.

The permissible overall length of the bus cabling will vary according to the required bit rate. If a longer cable or higher bit rate are required repeaters should be used. The maximum bit rates achievable are shown in the table below.

Bit rate (Kbit/s)	Max. length of type A bus cable (m)
1500	200
500	400
187.5	1000
93.75	1200
19.2	1200
9.6	1200

Note: Total stub length should not exceed 6.6m.

12.2 Pin assignments at the pump

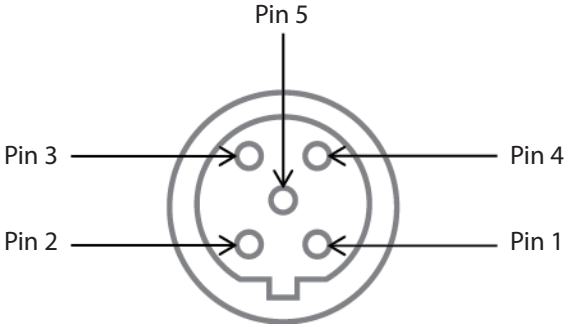

Pin No.	Signal	Function
1	VP	+5V supply for terminating resistors
2	RxD/TxD-N	Data line minus (A-line)
3	DGND	Data ground
4	RxD/TxD-P	Data line plus (B-line)
5	Shield	Ground connection

Note: If the pump is the last bus device connected to the PROFIBUS cable it must be terminated using terminating resistor (PROFIBUS standard EN 50170). To maintain ingress protection the resistor must be IP66 rated.

13 Switching on (Manual, PROFIBUS, Universal and Universal+)

13.1 Switching on the pump for the first time (Manual, PROFIBUS, Universal and Universal+ only)

Power-up the pump.

The pump displays the start-up screen with the Watson-Marlow Pumps logo for three seconds.

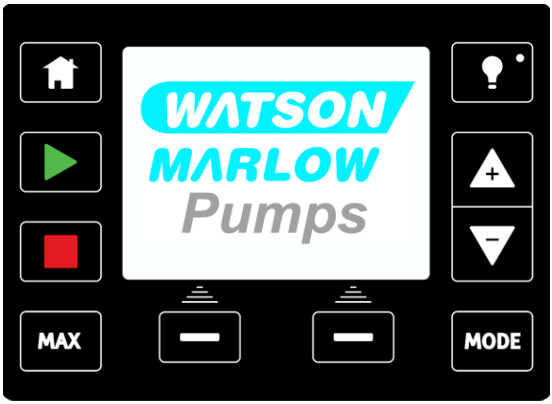

Selecting your chosen display language

Use the +/- keys to move the selection bar to your required language. Press **SELECT** to choose.

Your selected language will now be displayed on screen, choose **CONFIRM** to continue. All displayed text will now appear in your chosen language.

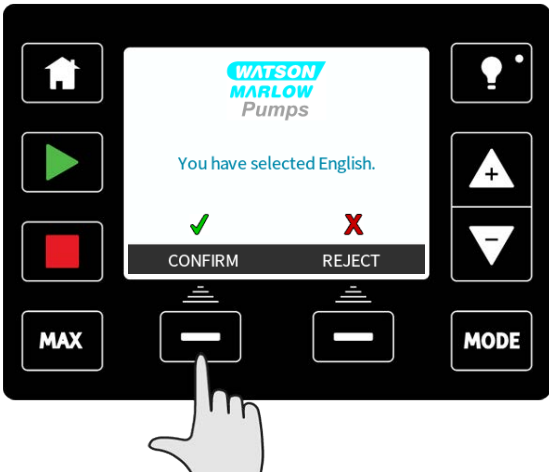

Choose **REJECT** to return to the language choice screen.

The pump is preset with operational parameters as shown in the table below:

First-time start-up defaults			
Flow rate	qdos120:960ml/min qdos60:480ml/min qdos30:240ml/min qdos20:120ml/min	**Pump status**	Stopped
Calibration	qdos120:16 ml/rev qdos60:6.67ml/rev qdos30:8 ml/rev qdos20:4 ml/rev	**Flow unit**	ml/min
Backlight	30 minutes	**Pump tag**	WATSON-MARLOW
Auto restart	Off		

This then proceeds to the home screen.

The pump is now ready to operate according to the defaults listed above.

Note: The display background colour changes according to running state as follows:

- **White** background indicates pump stopped
- **Blue** background indicates pump running
- **Red** background indicates error or alarm

All operating parameters may be changed by means of key-presses (see "Pump operation" on page 46).

13.2 Switching the pump on in subsequent power cycles (Manual, PROFIBUS, Universal and Universal+ only)

Subsequent power-up sequences will jump from the start-up screen to the home screen.

- The pump runs a power-on test to confirm proper functioning of the memory and hardware. If a fault is found, an error code is displayed (see "Error codes" on page 108).
- The pump displays the start-up screen with the Watson-Marlow Pumps logo for three seconds followed by the home screen.
- Start-up defaults are those in place when the pump was switched off last.

Check that the pump is set to operate as you require it.

The pump is now ready to operate.

All operating parameters may be changed by means of key-presses (see "Pump operation" on page 46).

Power interruption

This pump has an auto restart feature which, when active, will restore the pump to the operating state it was in when power was lost. See "Main menu (Manual, PROFIBUS, Universal and Universal+ only) " on page 84.

Stop / start power cycles

Do not power up/power down for more than **20 starts per hour**, whether manually or by means of the auto restart facility. We recommend remote control where a high frequency of power cycles is required.

14 Switching on (Remote)

When power is supplied to the pump, all the LED icons will illuminate for three seconds. After this period the pump will operate in accordance with the inputs received.

15 Pump operation

Note: Sections "Keypad functions (Manual, PROFIBUS, Universal and Universal+ only)" below up to and including "Help (Manual, PROFIBUS, Universal and Universal+ only)" on page 105 apply to Manual, PROFIBUS, Universal and Universal+ only. It is only possible to control the Remote pump via the input and output, (I/O) provided.

15.1 Pump operation (Remote pump)

The remote pump will operate proportionally to the analog signal provided. The default figures are 4.1mA = 0 rpm, 19.8mA = 125 rpm.

To stop the pump remotely apply a signal, minimum 5V, maximum 24V, to input pin 1. To run the pump in reverse, apply a signal, minimum 5V, maximum 24V to input pin 5.

15.2 Pump operation (Manual, PROFIBUS, Universal and Universal+ only)

Keypad functions (Manual, PROFIBUS, Universal and Universal+ only)

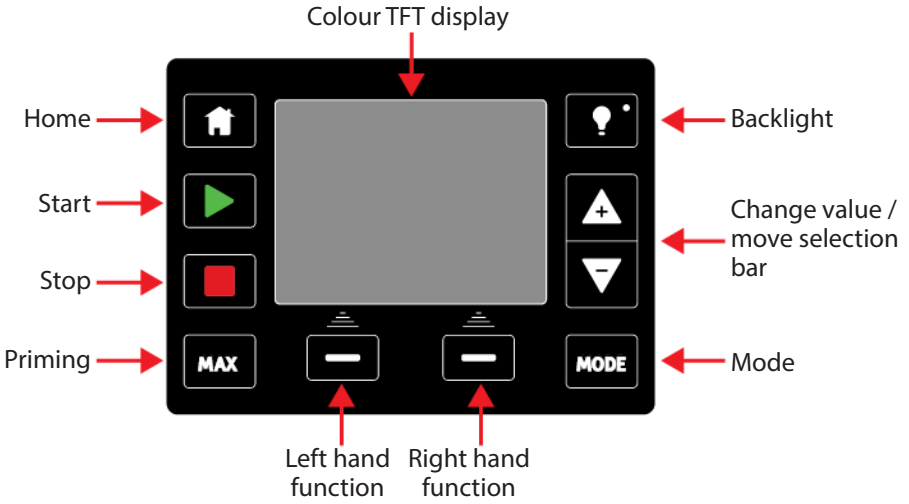

HOME

When the **HOME** key is pressed it will return the user to the last known operating mode. If modifying pump settings when the **HOME** key is pressed, it will disregard any setting changes and return you to the last known operating mode.

START

This key will start the pump at the displayed set speed when in manual mode or flow calibration. This key will deliver a contact dose volume when in **CONTACT** mode. It has no effect in the other remote modes.

STOP

This key will stop the pump when pressed at **any** time.

MAX

This key can be used to prime the pump when in manual mode. When pressed the pump will operate at maximum flow rate.

FUNCTION KEYS

When pressed will perform the function displayed on the screen directly above the relevant function key.

After 30 minutes of no keypad activity, the HMI display will dim to 50% brightness.

To restore full power to the display and reset the timer, press the **BACKLIGHT** key.

+/- KEYS

These keys are used to change programmable values within the pump. For example, flow rate. These keys are also used to move the selection bar up and down in the menus.

MODE

To change modes or mode settings, press the **MODE** key. The **MODE** key can be pressed at any time to enter the mode menu. If modifying pump settings when the **MODE** key is pressed, it will disregard any setting changes and return you to the **MODE** menu.

SCREEN SAVER

The display refreshes every 60 seconds. When this occurs you may notice a brief flash.

Screen Icons (Manual, PROFIBUS, Universal and Universal+ only)

Under certain conditions, various icons will appear in the screen display area:

	The pump displays a RED stop icon when it is in a manually stopped condition. In this state the pump will not start unless the START key is pressed.
	The pump displays a RED PAUSE icon when it is receiving a remote stop input whilst in a standby condition. The pump is placed in a standby condition by pressing the START key in manual mode, or by selecting Analogue mode. In this state the pump will respond to a change in state of the start/stop input, and may start automatically when a control signal is received.
	When the pump is running it displays a turning icon to indicate a pumping state.

Fundamental work with regard to lifting, transportation, installation, starting-up, maintenance and repair should be performed by qualified personnel only. The unit must be isolated from mains power while work is being carried out. The motor must be secured against accidental start-up.

Switching between modes (Manual, PROFIBUS, Universal and Universal+ only)

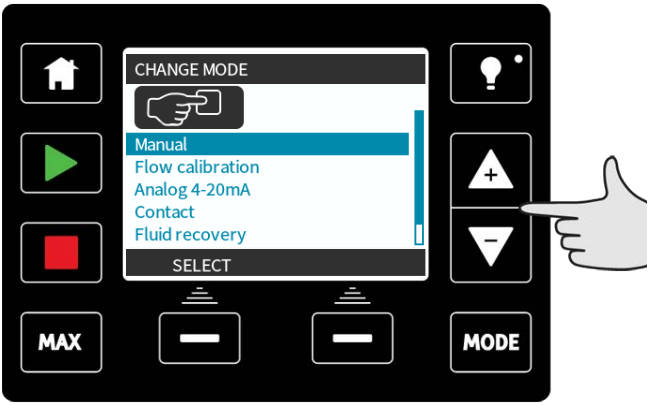

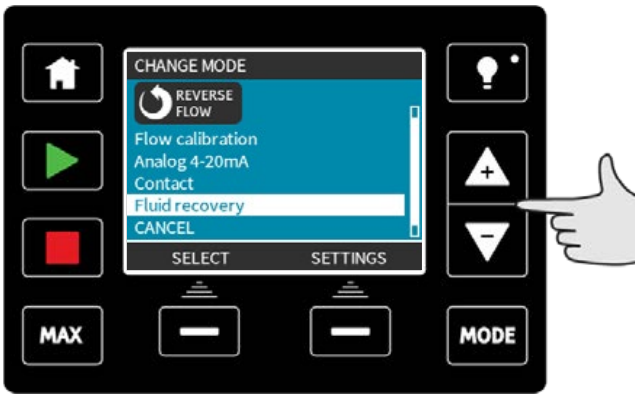

Note: Remote model does not feature selectable modes.

Using **+/-** keys will scroll through the available modes. The available modes are:

- **Manual** (default)
- **Flow calibration**
- **Analog 4–20mA** (Universal and Universal+ only)
- **Contact mode** (Universal+ only)
- **PROFIBUS** (PROFIBUS only)
- **Fluid recovery**
- **CANCEL**

Use **SELECT** to choose mode. Use the right hand function key to alter mode settings.

16 Manual mode (Manual, PROFIBUS, Universal and Universal+ only)

All settings and functions of the pump in manual mode are set and controlled by means of key-presses. Immediately after the start-up display sequence (detailed in: "Switching the pump on in subsequent power cycles (Manual, PROFIBUS, Universal and Universal+ only)" on page 44), the manual mode home screen will be displayed unless auto restart is enabled.

If enabled, the pump will return to the last known operating state when the power was lost. When the pump is running it displays an animated clockwise arrow. In normal operation, the direction of flow is into the bottom port of the pumphead and out of the top port.

If an exclamation mark (**!**) is displayed, it indicates that Auto restart is on (see 18.3 General settings on page 57). If a padlock icon shows, it indicates that the keypad lock is on.

START

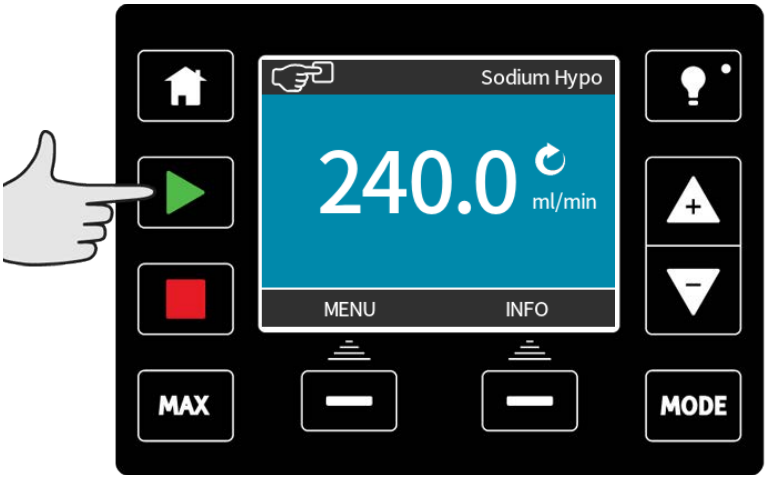

Starts the pump at the current flow displayed, and the display background changes to blue. If the pump is running pressing this has no effect.

STOP

Stops the pump. The display background changes to white. If the pump is not running pressing this has no effect.

INCREASING AND DECREASING FLOWRATE

Using the **+/-** keys will increase or decrease the flowrate.

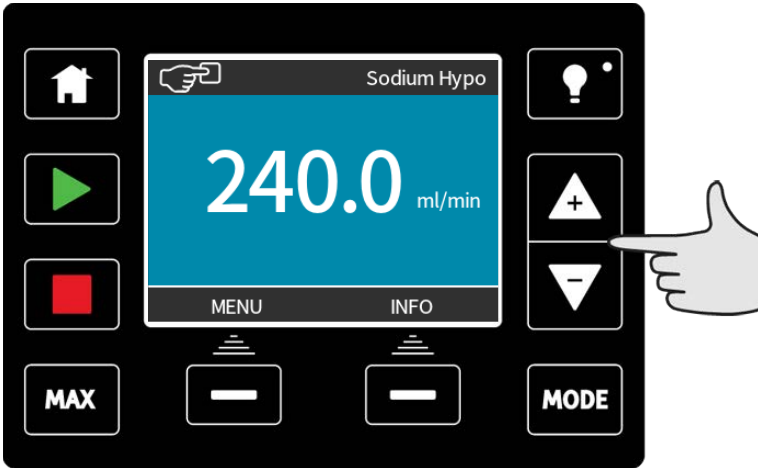

Decreasing flowrate:

- A single key press will decrease flowrate by the least significant digit of the chosen flowrate unit.
- Repeat key presses as required to achieve the desired flowrate.
- Hold down the key for flowrate scrolling.

Increasing flow rate:

- A single key press will increase flowrate by the least significant digit of the chosen flowrate unit.
- Repeat key-presses as required to achieve the desired flowrate.
- Hold down the key for flowrate scrolling.

Max 100% function (Manual mode only)

- Press and hold the **MAX** key to run at maximum flow.
- Release the key to stop the pump.
- The volume dispensed and time elapsed are displayed whilst the **MAX** key is pressed and held. The **MAX** function will work when the key is pressed in manual mode regardless of the status of the START/STOP input.

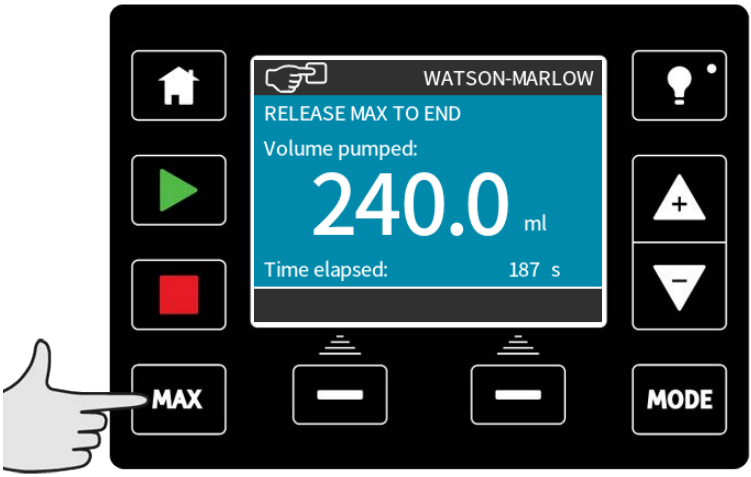

17 PROFIBUS mode(PROFIBUS only)

In this operating mode PROFIBUS control can be enabled or disabled. The qdos PROFIBUS pump is designed so that the station address can only be set from the pump. The user can set the station address within this mode.

Select **MODE**

Using the +/- keys scroll to **PROFIBUS** and press **SELECT**

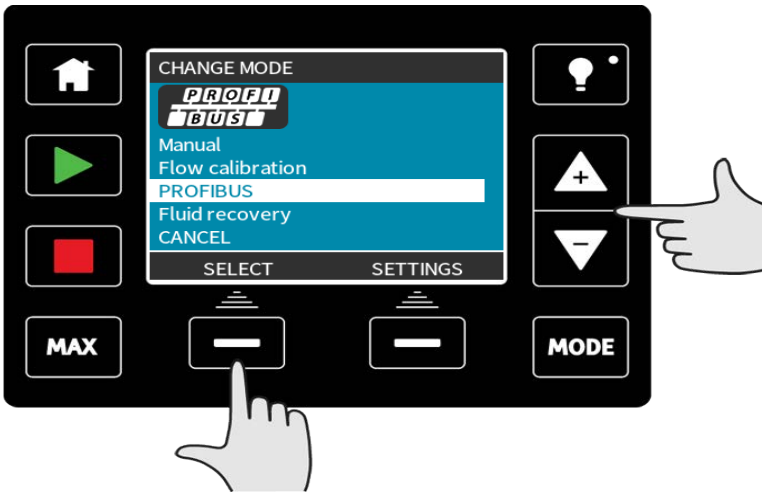

If PROFIBUS is not enabled, the screen below will prompt you to **CONFIRM** that you would like to enable PROFIBUS.

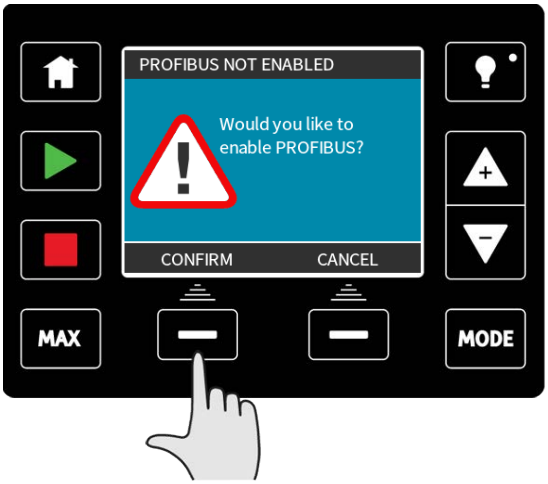

On the PROFIBUS home screen the white **P** icon indicates that there is data exchange.

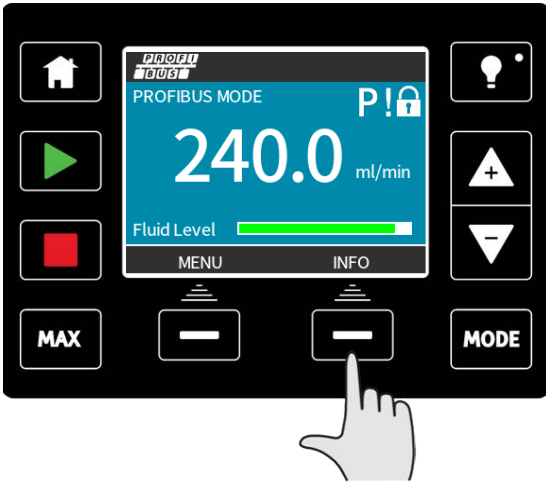

Pressing the **INFO** function key will display further information.

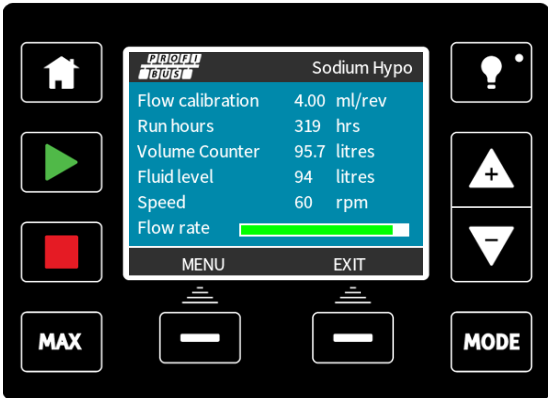

17.1 Assigning the PROFIBUS station address at the pump

The station address can only be set from PROFIBUS settings. The station address cannot be automatically assigned by the master.

Select **MODE**

Using the **+/-** keys scroll to **PROFIBUS** and press **SETTINGS**

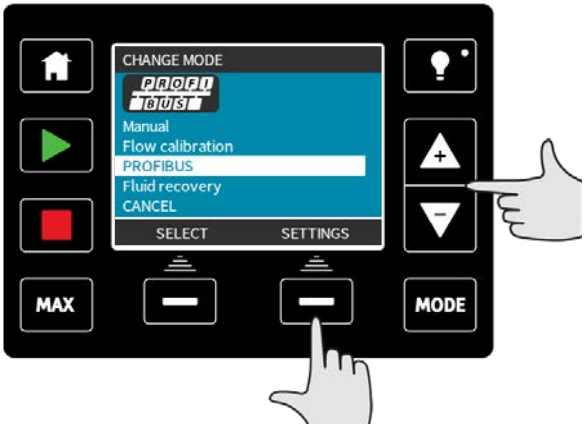

Using the **+/-** keys alter the station address, in the range from 1 to 125. (126 is the default station address).

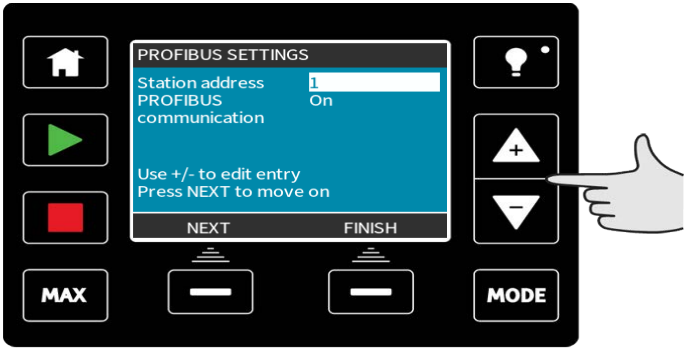

Press **FINISH** to set the station address, or **NEXT** to enable/disable PROFIBUS communication.

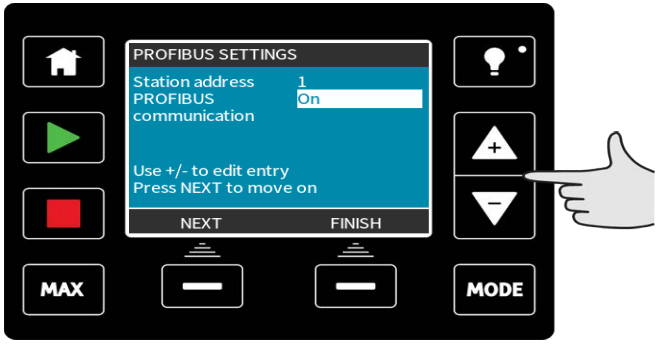

Use the **+/-** keys to enable or disable PROFIBUS communication and press **FINISH**.

17.2 PROFIBUS communication errors

In PROFIBUS mode, the screen below is displayed, the P indicates data exchange is happening.

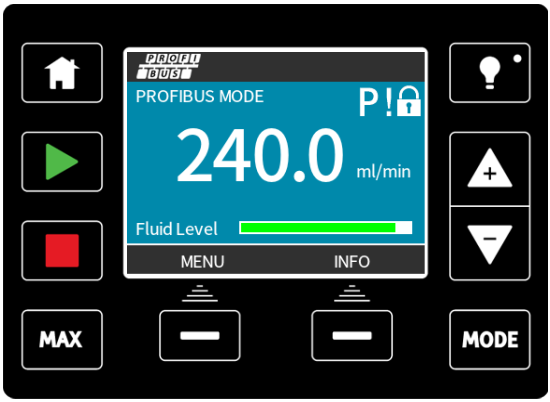

This screen will only be displayed after successful implementation of Master Slave communications, which always follow the sequence described below.

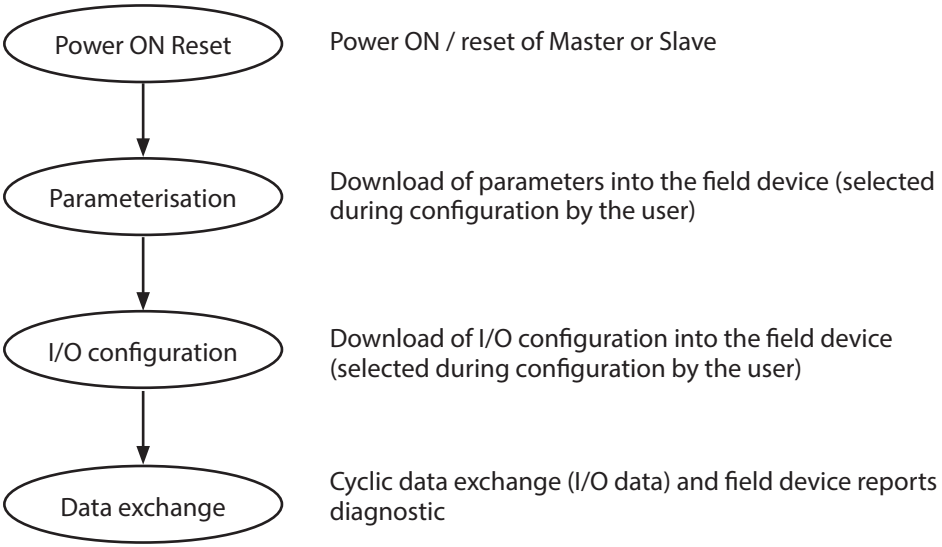

If data exchange is lost at any time, the following screen will be displayed. The first red dot corresponds to the stage at which the error occurred and subsequent stages will indicate a red dot because the communication sequence halted before this point.

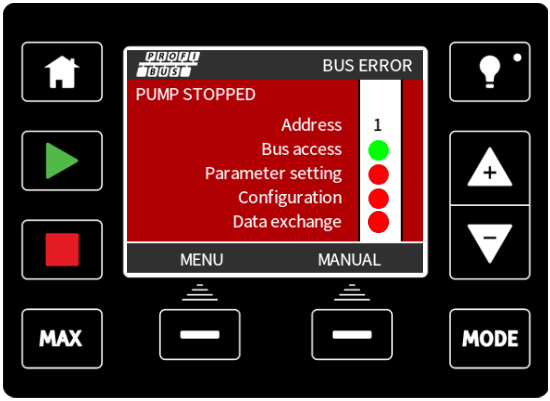

The screen will state running or stopped, depending on how the user has set up the fail-safe function within the PROFIBUS GSD file (see "PROFIBUS GSD file" below). The **MODE** button gives access to the PROFIBUS settings and the station address. When the menus are accessed, the pump is still in PROFIBUS bus mode but with no communications.

After five minutes of inactivity the pump will revert back to the home screen and discard any unsaved changes, if there are still no communications then the BUS ERROR screen will be displayed.

17.3 PROFIBUS GSD file

The qdos PROFIBUS pump can be integrated into a PROFIBUS DP V0 network using a General Station Data (GSD) file. The file identifies the pump and contains key data including its communication settings, the commands it can receive and the diagnostic information it can pass to the PROFIBUS master on interrogation.

The GSD file—file name WAMA0E7D.GSD—can bedownloaded from the Watson-Marlow website and installed; or typed into a PROFIBUS master directly from this manual using a GSD editor program.

Note: The data-flow to and from the pump may need to be byte-reversed, due to differences of handling the data between suppliers of master devices.

The GSD file, filename: WAMA0E7D.GSD

```
;
;*******************************************************************************
***********
;*
============================================================
========================= *
;* *
;* Watson-Marlow Bredel Pumps *
;* Bickland Water Road *
;* Falmouth *
;* Cornwall *
;* TR11 4RU *
;* Tel.: +44(1326)370370 *
;* FAX.: +44(1326)376009 *
```

```
;* *
;*
=============================================================
========================== *
;* Filename: WAMA0E7D.GSD *
;* GSD file version 3 from 2013-09-24 *
;* ------------------------------------------------------------------------- *
;* *
;*************************************************************************
***********
#Profibus_DP
GSD_Revision = 3
Vendor_Name = "Watson Marlow"
Model_Name = "Qdos Profibus Pump"
Revision = "Version 3.00"
Ident_Number = 0x0E7D
Protocol_Ident = 0
Station_Type = 0
FMS_supp = 0
Hardware_Release = "V1.00"
Software_Release = "V1.00"
Redundancy = 0
Repeater_Ctrl_Sig = 0
24V_Pins = 0
9.6_supp = 1
19.2_supp = 1
45.45_supp = 1
93.75_supp = 1
187.5_supp = 1
500_supp = 1
1.5M_supp = 1
3M_supp = 1
6M_supp = 1
12M_supp = 1
MaxTsdr_9.6=60
MaxTsdr_19.2=60
MaxTsdr_45.45=60
MaxTsdr_93.75=60
MaxTsdr_187.5=60
MaxTsdr_500=100
```

MaxTsdr_1.5M=150

MaxTsdr_3M=250

MaxTsdr_6M=450

MaxTsdr_12M=800

Slave_Family = 0

Implementation_Type = "VPC3+S"

Info_Text="PROFICHIP: PROFIBUS DPV0 - slave, Watson Marlow Qdos"

Bitmap_Device = "WAMA_1N"

Freeze_Mode_supp=1

Sync_Mode_supp=1

Fail_Safe=1

Auto_Baud_supp=1

Set_Slave_Add_supp=0

Min_Slave_Intervall=6

Modular_Station=0

Max_Diag_Data_Len=34

Max_User_Prm_Data_Len = 9

Ext_User_Prm_Data_Const(0)= 0x00,0x00,0x00,0x00,0x00,0x00,0x00,0x00,0x00

Module="WM Pump, 3/14 word out/in" 0x62,0x5D

1

EndModule

17.4 User Parameter Data

The user parameter data is set by entering values into the 'Ext_User_Prm_Data_ Const(0)' line of the GSD file. This is indicated below and the relevant bytes are listed in the table. No further changes should be made to the GSD file and Watson-Marlow accepts no responsibility for pump failures arising from changes to the GSD file.

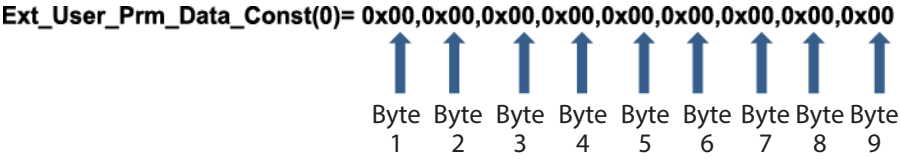

8 bit	Byte 1	Pre Assigned
8 bit	Byte 2	Reserved
8 bit	Byte 3	Min Speed (High byte of 16-bit unsigned)
8 bit	Byte 4	Min Speed (Low byte of 16-bit unsigned)
8 bit	Byte 5	Max Speed (High byte of 16-bit unsigned)
8 bit	Byte 6	Max Speed (Low byte of 16-bit unsigned)

8 bit	Byte 7	Fail Safe
8 bit	Byte 8	Fail Safe Speed (Low byte of 16-bit unsigned)
8 bit	Byte 9	Fail Safe Speed (High byte of 16-bit unsigned)

Set Min/Max Speeds

The Min/Max Speed parameters are used to set the minimum and maximum speed from the PROFIBUS interface. The values are only used if the matching bit in the Control Word is enabled and they are not zero. The values are 16 bit unsigned in 1/10th of RPM of the head speed.

If the user requests the pump to operate at a lower speed than the defined minimum speed from the user parameter data (bytes 3, 4) then the pump will operate at the defined minimum speed.

If a maximum speed has been configured in the user parameter data, then the pump will be limited to this maximum speed even when the master requests a higher rpm.

Fail Safe

The fail-safe user parameter is used to set the correct course of action to take in the event of a PROFIBUS communications failure. The fail-safe byte is configured as shown in the following table. If no bits are set or an invalid bit pattern is set the default fail safe behaviour shall be to stop the pump.

Hex	Description
0x00	The pump will stop
0x01	Continue driving using the last demanded speed
0x02	Continue driving using the fail safe speed
0x03 - 0x07	Reserved

Fail Safe Speed

The fail-safe speed parameter is used to set the speed at which the pump should be driven if a PROFIBUS communications error occurs and if the fail-safe user parameter is set to 0x02.

17.5 PROFIBUS data exchange

The data in this section is provided as reference material for a PROFIBUS network operator. Operating this pump under PROFIBUS control is beyond the scope of this instruction manual. Consult your PROFIBUS network literature for further information.

Default address	**126**
PROFIBUS Ident	**0x0E7D**
GSD File:	**WAMA0E7D.GSD**
Config:	**0x62, 0x5D (3 words out, 14 words in)**
User parameter bytes:	**6**

Cyclic Data Write (from Master to pump)

Cyclic Data Write (from Master to pump)		
16 bit	Byte 1 (low), 2 (high)	Control Word
16 bit	Byte 3 (low), 4 (high)	Pumphead Speed Setpoint (unsigned)

Cyclic Data Write (from Master to pump)		
16 bit	Byte 5 (low), 6 (high)	Set Flow Calibration in µl per revolution

Control Word	
Bit	**Description**
0	Motor running (1= Running)
1	Direction (0= CW, 1= CCW)
2	Motor revolution counter reset (1=Reset count)
3	Reserved
4	Enable User Parameter Min/Max Speeds (1= Enabled)
5	Enable Fieldbus master to set Flow Calibration (1= Enabled)
6	Ignore leak detection sensor
7	Fluid Level Reset
8-15	Reserved

Pumphead Speed Setpoint

The speed setpoint is a 16-bit unsigned integer value that represents the speed of the pump head in 1/10th of RPM. For example 1205 represents 120.5 RPM.

Set Flow Calibration

This parameter is used to set the flow calibration value from the fieldbus interface. The value is a 16 bit unsigned integer representing µl per revolution of the pumphead. Note that this value is only used if bit 5 of the Control Word is enabled.

Ignore Leak Detection Sensor

If bit 6 of the control word is enabled, the following run screen will be displayed.

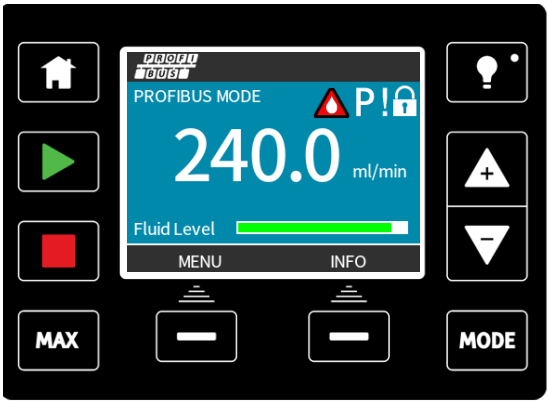

If a leak is detected the leak detect screen (16.1 Leak detection on page 54) will not be displayed. Bit 10 of the status word will be activated to indicate that a leak has occurred and the pump will continue to run until the Master indicates what action should be taken.

Cyclic Data Read (from pump to Master)

Cyclic data read (from pump to Master)		
16 bit	Byte 1, 2	Status Word
16 bit	Byte 3, 4	Pumphead Measured Speed (unsigned)
16 bit	Byte 5, 6	Hours Run
16 bit	Byte 10,9	No of full motor revolutions
16 bit	Bytes 8,7	Reserved
32 bit	Byte 13, 14, 15, 16	Fluid Level
32 bit	Byte 17, 18, 19, 20	Unassigned
32 bit	Byte 21, 22, 23, 24	Unassigned
32 bit	Byte 25, 26, 27, 28	Unassigned

Status Word	
Bit	**Description**
0	Motor running (1= Running)
1	Global Error Flag (1= Error)
2	Fieldbus Control (1= Enabled)
3	Reserved
4	Over current error
5	Under voltage error
6	Over voltage error
7	Over temperature error
8	Motor stalled
9	Tacho fault
10	Leak detected
11	Low Setpoint- Out of range
12	High Setpoint- Out of range
13	Fluid level alert
14	Reserved
15	Reserved

Pumphead Speed

The pumphead speed is a 16-bit unsigned integer value that represents the speed of the pump head in 1/10th of RPM. For example 1205 represents 120.5 RPM.

Hours Run

The hours run parameter is a 16 bit unsigned integer and will represent whole hours of runtime.

No of full motor revolutions

This counts down from FF for each complete motor revolution. Reset this counter to FF by using bit 2 of the control word. The motor relates to the motor inside the pump before the gearbox ratio. The number of pumphead revolutions can be obtained by dividing the number of motor revolutions by the gearbox ratio of 29.55.

	BYTE	
	10	9
A	FF	FF
B	FF	C4

HEX TO DECIMAL	
10	9
65536	
65476	

	MOTOR FULL REVOLUTIONS
A Minus B	59

A = Start of Dose
B = End of Dose

PUMPHEAD REVOLUTIONS	
MOTOR REVS	GEARBOX RATIO
59	29.55
Divide	
1.996 RPM	

Read Flow Calibration

The value is a 16 bit unsigned integer representing µl per revolution.

17.6 Device-related diagnostic data

8 bit	Byte 1	Header Byte
16 bit	Byte 2, 3	Reserved
16 bit	Byte 4, 5	Reserved
16 bit	Byte 6, 7	Min Speed (unsigned)
16 bit	Byte 8, 9	Max Speed (unsigned)
32 bit	Byte 10, 11, 12, 13	Software Version Main CPU
32 bit	Byte 14, 15, 16, 17	Software Version HMI CPU
32 bit	Byte 18, 19, 20, 21	Software Version Flash
32 bit	Byte 22, 23, 24, 25	Software version PROFIBUS CPU

17.7 Channel-related diagnostic data

Channel-related diagnostic blocks are always three bytes long in the following format:

Byte 26	Header
Byte 27	Channel type
Byte 28	Channel-related error code

Channel-related diagnostic data	Byte 3
Global error	=0xA9 (General error)
Over current	=0xA1 (Short circuit)
Under voltage	=0xA2 (Under voltage)
Over voltage =0xA3 (Over voltage)	=0xA3 (Over voltage)
Motor stall	=0xA4 (Overload)
Over temp =0xA5 (Over temp)	=0xA5 (Over temp)
Tacho fault	=0xB1 (Device related 0x11)
Leak detected	=0xB2 (Device related 0x12)
Fluid level alert	=0xB3 (Device related 0x15)
Reserved	=0xA6 (Reserved)
Setpoint out of range- high	=0xA7 (Upper limit exceeded)
Setpoint out of range- low	=0xA8 (Lower limit exceeded)

18 Flow calibration mode (Manual, PROFIBUS, Universal and Universal+ only)

This pump displays flow rate in ml/min.

Setting the flow calibration

Select **MODE**

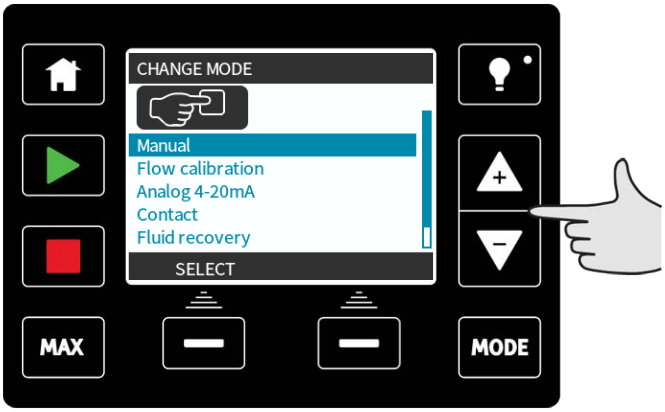

Using the **+/-** keys, scroll to Flow calibration and press **SELECT**.

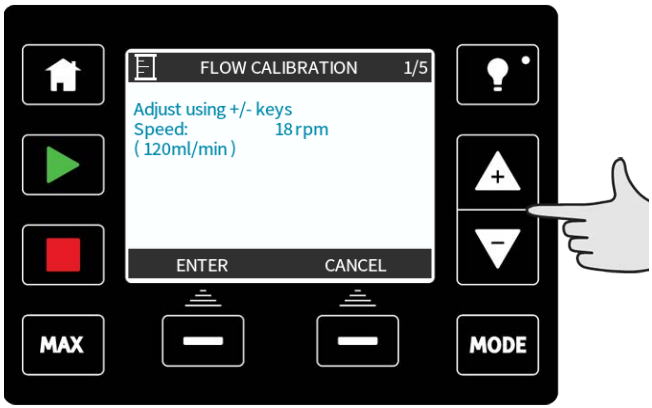

Using the **+/-** keys enter the maximum flow rate limit and press **ENTER**.

Press **START** to begin pumping a volume of fluid for calibration.

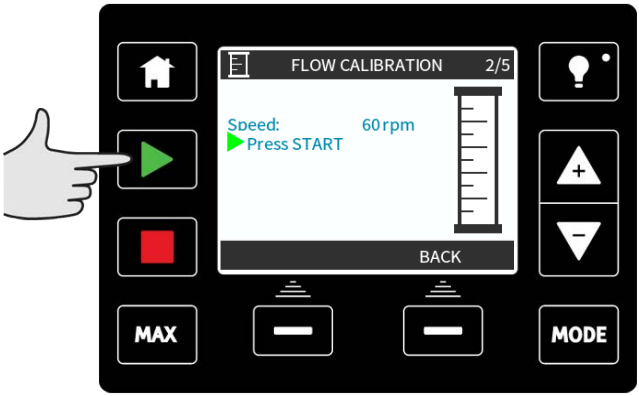

Press **STOP** to stop pumping fluid for the calibration.

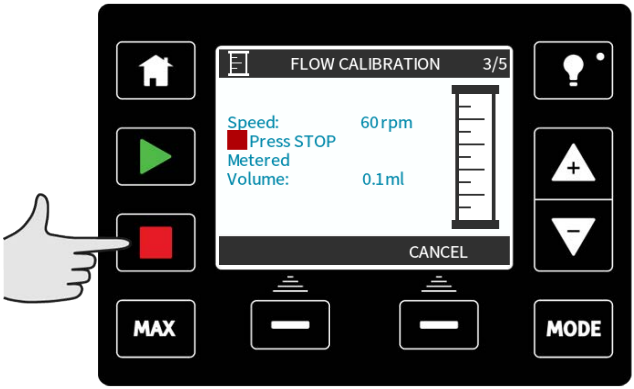

Using the **+/-** keys enter the actual volume of fluid pumped.

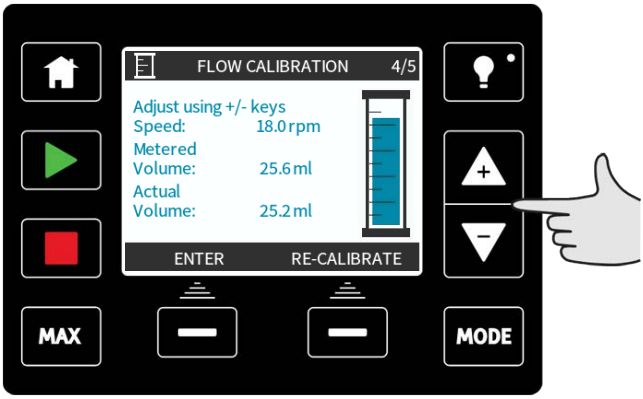

To accept the new calibration press **ACCEPT** or **RECALIBRATE** to repeat the procedure. Press **HOME** or **MODE** to abort.

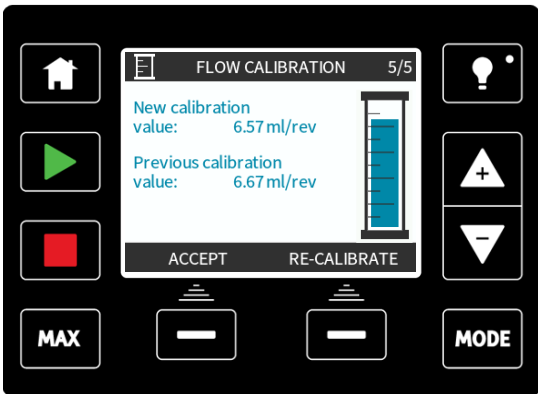

The pump is now calibrated.

19 Analog 4-20mA mode (Universal and Universal+ only)

In this remote operating mode the flowrate will be proportional to the external milliamp signal input received by the pump. The Universal pump will operate at 0 rpm when 4.1mA is received and maximum rpm when 19.8mA is received.

In the Universal+ pump the relationship between the external milliamp signal and the flow rate is determined by configuring the two points **A** and **B** as shown in the graph below. The rate of flow can be proportional or inversely proportional to the analogue milliamp input.

The default values stored in the pump are:

A—4.1mA, 0 rpm

B (qdos20)—19.8mA, 55 rpm

B (qdos30,qdos60 and qdos120)—19.8mA, 125 rpm

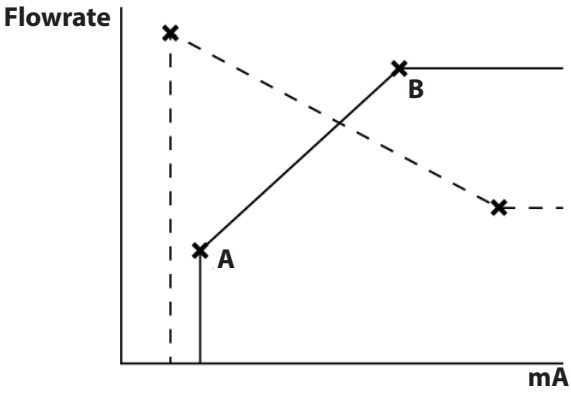

When the mA signal received is greater than the level defined by point A, the run status output will be energised as the pump is running.

To select Analog 4-20mA mode:

- Select **MODE**.
- Using the **+/-** keys, scroll to **Analog 4-20mA** and press **SELECT**.

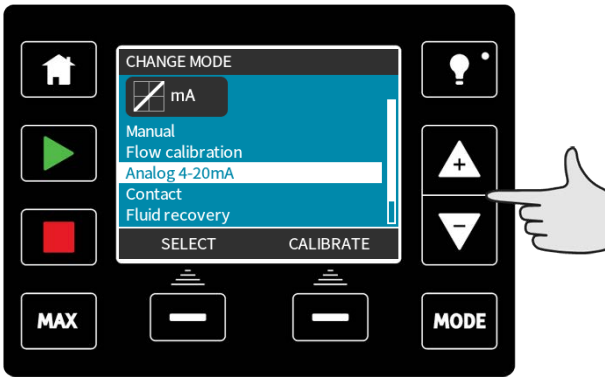

The current signal being received by the pump is displayed, for information only, on the **HOME** screen.

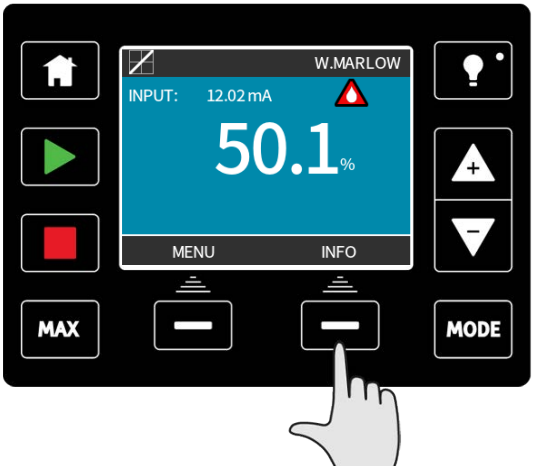

Pressing the **INFO** function key will display further information.

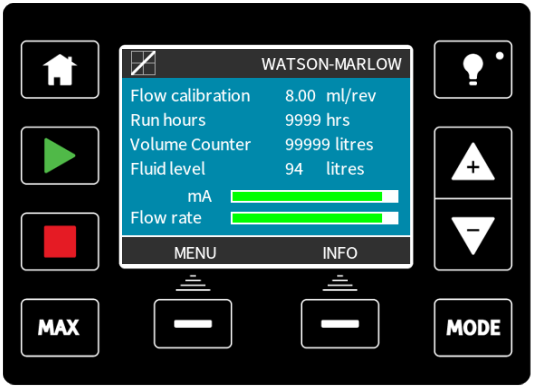

Press the **INFO** key again to display the 4-20mA calibration figures.

Analog Scaling Factor

The Scaling Factor is a method of adjusting the 4-20mA profile by using a multiplication factor.

Press **+/-** from the **HOME** screen to access the scaling factor.

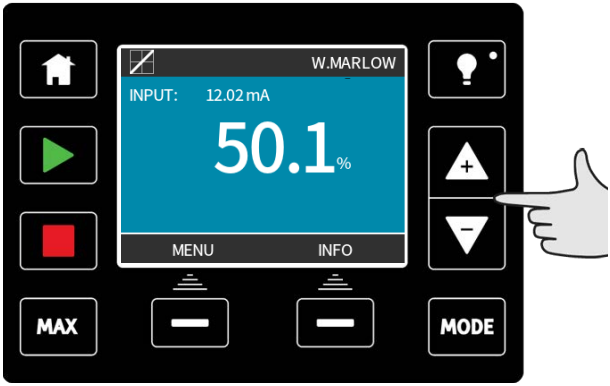

Use the **+/-** keys to enter a multiplication factor. A figure of 1.00 will not alter the 4-20mA profile. A figure of 2 will double the flow rate output from a specific mA signal. A figure of 0.5 will halve the output.

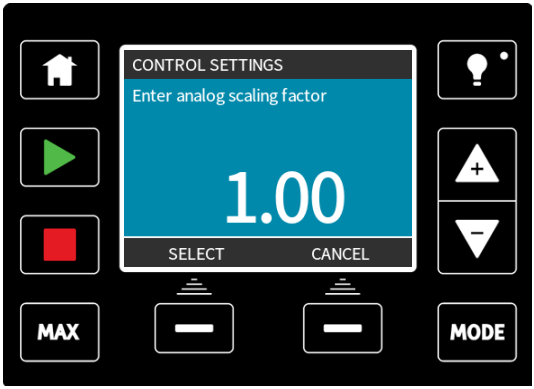

Press **SELECT** once you have chosen the required factor.

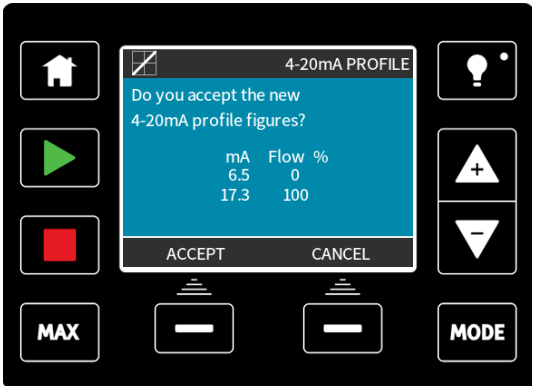

Press **ACCEPT** to confirm the new 4-20mA PROFILE figures. This will not alter the stored A and B points, the multiplication factor will re-scale the 4-20mA profile. To re-set the original flow rates re-set the multiplication factor to 1.00.

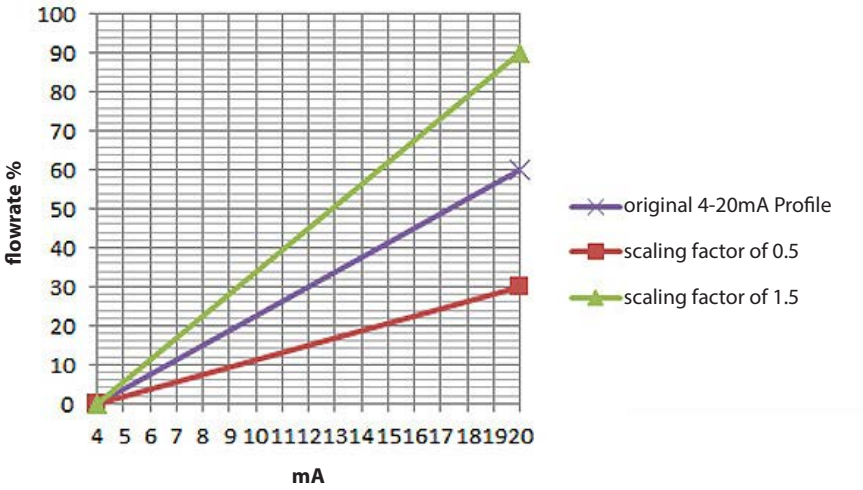

The 4-20mA profile is a linear relationship where y=mx+c the scaling factor alters the gradient m. The speed limit function in control settings will also scale the analog signal. The difference between scaling factor and speed limit is that the speed limit is a global variable applied in all modes. The speed limit cannot exceed the high flow rate set point (B).

The speed limit function takes precedence over the scaling factor. For example if the qdos20 4-20mA profile is 0% flow at 4mA to 100% flow at 20mA and a speed limit of 33 rpm is applied, followed by a scaling factor of 0.5, then the output will be 30%. If a scaling factor of 2 is applied in the same scenario then the output will be 33 rpm or 60%, as the speed limit takes precedence over the scaling factor.

If you are using manual scaling it is recommended to not use speed limit to avoid confusion.

19.1 Calibrate the pump for 4-20mA control (Universal+ only)

This feature is only available in the Universal+ model.

The pump must be stopped before attempting to calibrate the 4-20mA values. High and low signals must be within range. If the signal sent is out of range you will not be able to set the signal input value and progress to the next step in the process.

Select **MODE**.

Using the **+/-** keys scroll to **Analog 4-20mA** and press **CALIBRATE 4-20mA**.

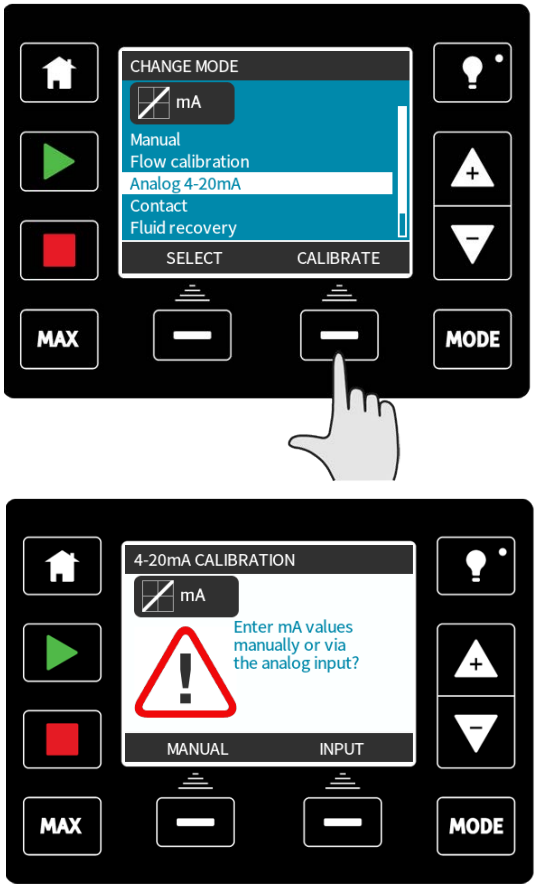

Choose whether to enter the current values manually via the keypad, or whether to apply the current signals electrically to the analog input.

Setting a high signal

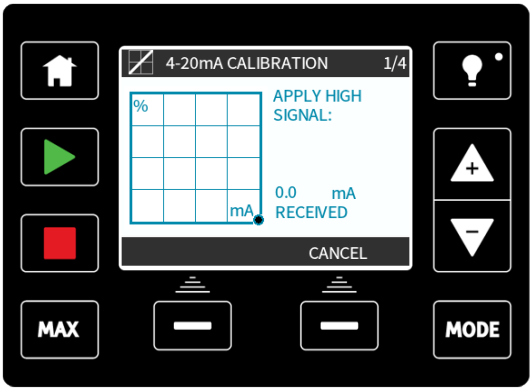

Send the high signal input to the pump, or enter the current value using the **+/-** keys.

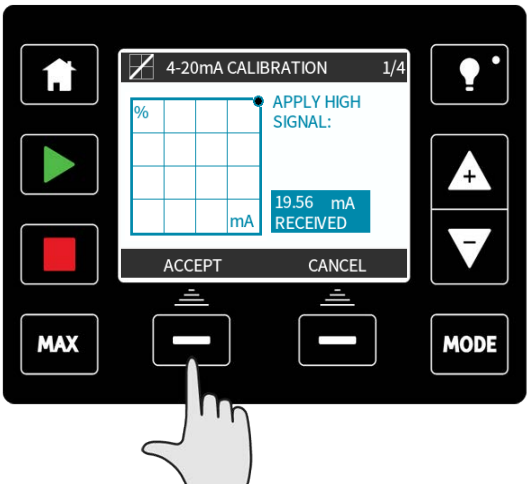

ACCEPT appears when high mA signal is within tolerance limits. Press **ACCEPT** to accept the high signal input or **CANCEL** to return to the previous screen.

Setting high flow calibration

Using the **+/-** keys scroll to the desired flow rate. Select **SET FLOW** or press **BACK** to return to the previous screen.

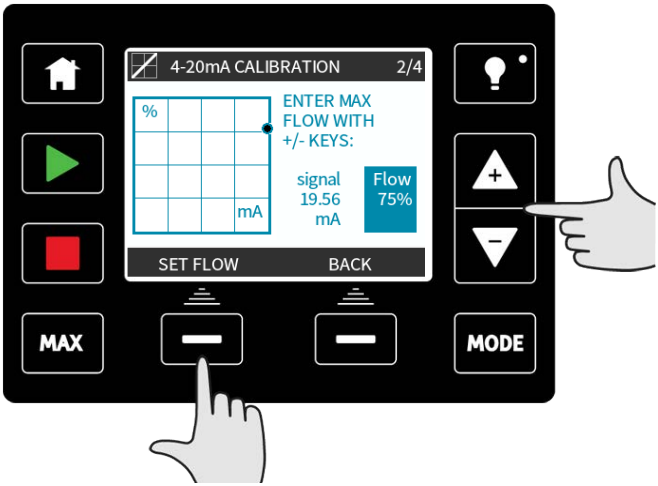

Setting a low signal

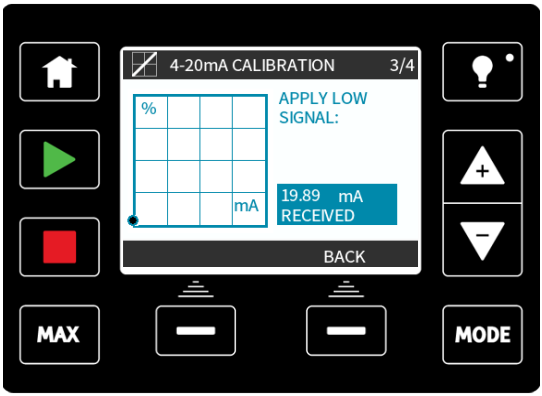

Send the low signal input to the pump, or enter the current value using the **+/-** keys.

If the range between the low and high signal is less than 1.5mA, the following error message will be displayed.

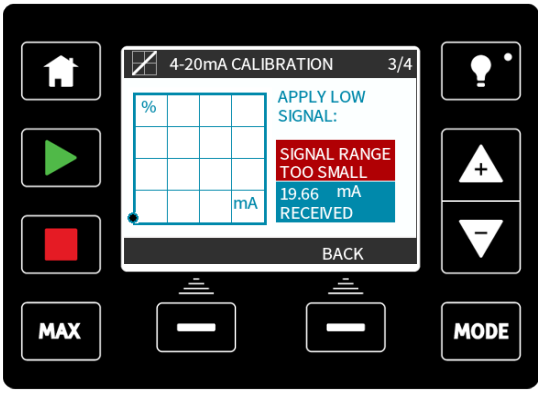

ACCEPT appears when low mA signal is within tolerance limits. Press **ACCEPT** to accept the low signal input or **CANCEL** to return to the previous screen.

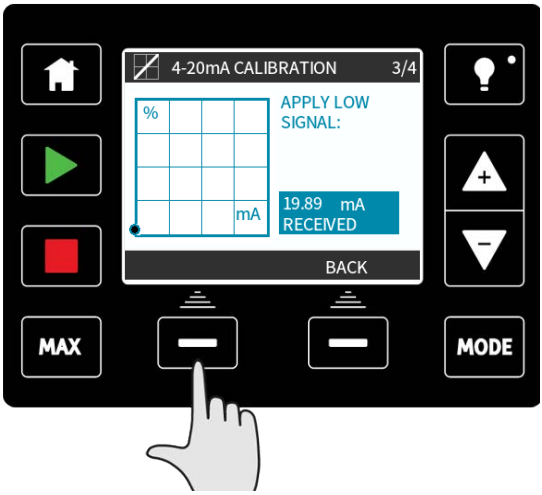

Setting low flow calibration

Using the **+/-** keys scroll to the desired flow rate. Select **SET FLOW**.

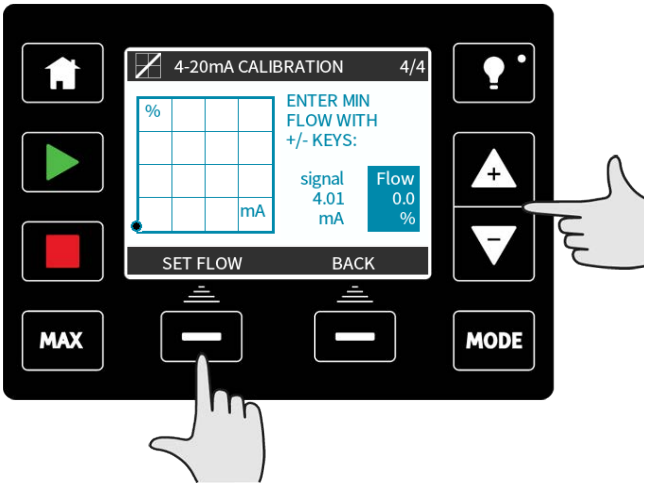

This proceeds to the screen confirming calibration is complete. Select **CONTINUE** to start in proportional mode or **MANUAL** to continue in manual mode.

20 Contact Mode (All Universal and Universal+ models except 110V relay versions)

In this operating mode the pump will meter a specific dose of fluid when an external pulse is received.

The dose volume is a user defined value between 0.1ml and 999l.

20.1 Contact settings

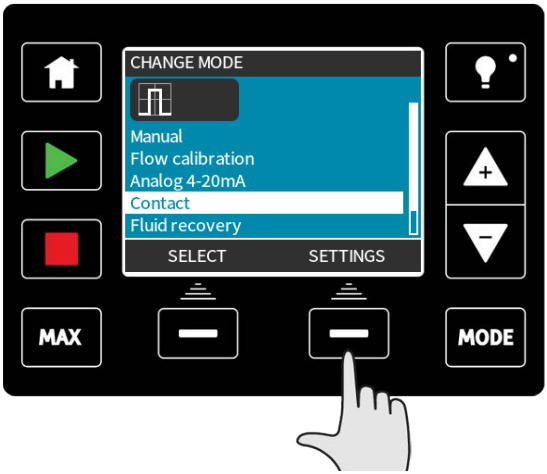

To setup contact mode, firstly you will need to define the settings. To do this, press the **MODE** key, move the selection bar to **Contact** and select **SETTINGS** with the right-hand function key.

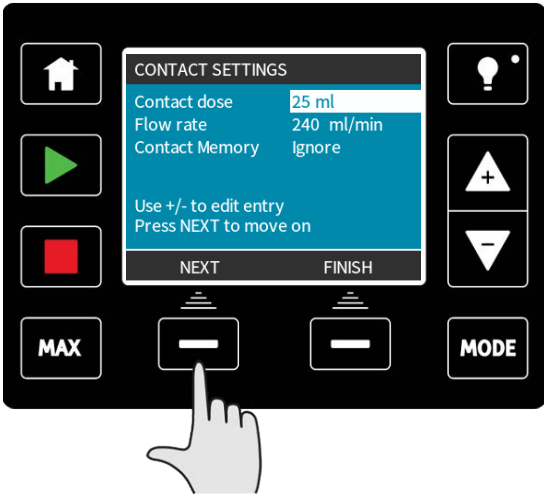

This will display the settings.

Use **NEXT** to move the selection bar to the next setting.

Use **+/-** to alter the value of the highlighted setting:

- The **contact dose** is the volume of fluid the pump will dispense when an external pulse is received on input pin 2.
- The **flow rate** will determine the time taken to complete each dose.
- **Contact memory** determines what the pump will do when pulses are received while a dose is in progress. If set to "ignore" the pulses will be forgotten by the pump. If set to "add" any pulses received while dosing will be queued up in memory and will be dispensed when the current dose has finished.

  If pulses are buffered in the memory then the pump will not stop between doses.

Once you have decided all your settings press **FINISH** and press **SAVE** to store.

Electrical pulse specification

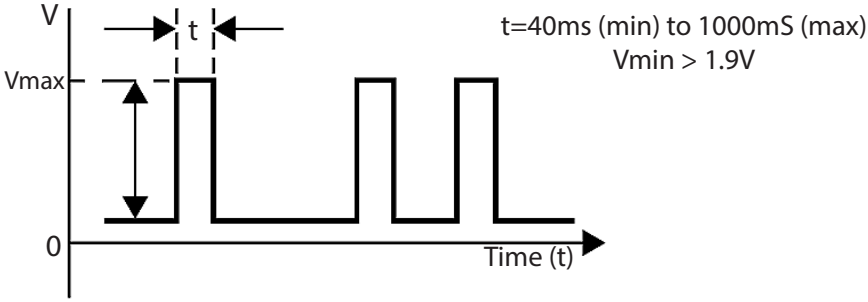

20.2 Contact operating mode (All Universal and Universal+ models except 110V relay versions)

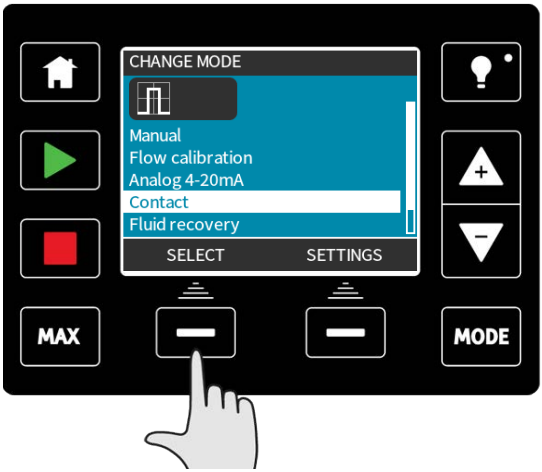

To enter contact mode press the **MODE** key, move the selection bar to **Contact**, and press **SELECT**.

The contact mode home screen will be displayed. The home screen displays the contact dose, the flow rate, and the dose time remaining when a dose is in progress. The dose time is only displayed on screen when it is between 3 seconds and 999 seconds.

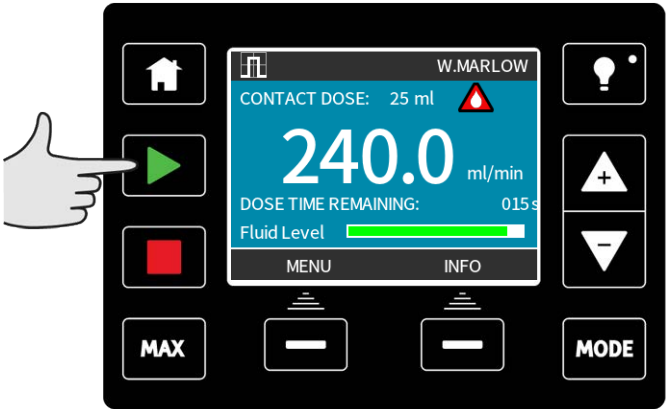

When the pump is not dosing it is possible to manually start a dose by pressing the **START** key.

Doses which operate for less than 3 seconds are not recommended.

Pulse dosing as an operation mode has its limitations. From an application perspective it is often not the most efficient method of achieving concentration consistency due to the pump only metering when a pulse is received, as opposed to continuously running in proportion to the flow. Intermittently dosing into a fluid line will require enough pipe to ensure the solution is adequately mixed, or a mixing tank.

With the ability to operate at very low speeds, metering chemicals is a much better solution than dosing them at intervals. We recommend examining your process to identify whether a 4-20mA signal can be used rather than a pulse. Where technology does not allow a 4-20mA signal we recommend using a signal converter accessory. This can be used to change your pulse signal to a 4-20mA signal, ideal for metering (see "Analog 4-20mA mode (Universal and Universal+ only)" on page 67).

20.3 Fluid recovery mode (Manual, PROFIBUS, Universal and Universal+ only)

In this operating mode, the pump can be run in reverse for short periods to recover fluid/chemicals pumped. This is mainly used for maintenance purposes.

Press the **MODE** key, using the **+/-** keys position the selection bar over the fluid recovery menu option and press **SELECT**.

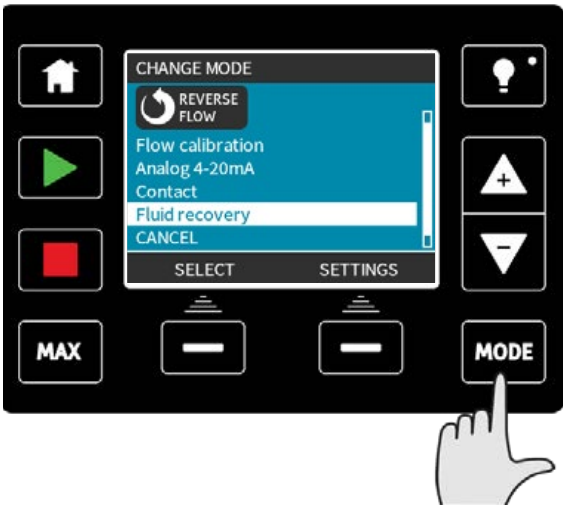

If the pump is already running then the following screen will be displayed. The pump must be stopped before it can be reversed to recover fluid. Press **STOP PUMP**.

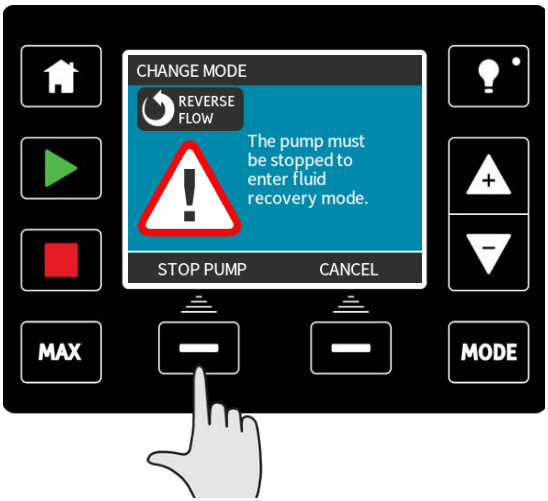

An instruction is now displayed. There is a warning to ensure that your system design permits reverse flow. If unidirectional valves are installed then reverse flow will not function and the pump will build up excessive pressure within the pipework.

Press and hold **RECOVER** to start running the pump in reverse and recover fluid. The screen below will be displayed whilst **RECOVER** is held down. As fluid is recovered the volume recovered and time elapsed will increase.

Release **RECOVER** to stop running the pump in reverse.

20.4 Remote fluid recovery (Universal and Universal+ models without relay modules)

It is possible to run the pump in reverse and recover fluid automatically in the analog 4-20mA mode. To achieve this, it is necessary to enable remote fluid recovery functionality. To enable this position the selection bar over fluid recovery in the mode menu and press the **SETTINGS** function key.

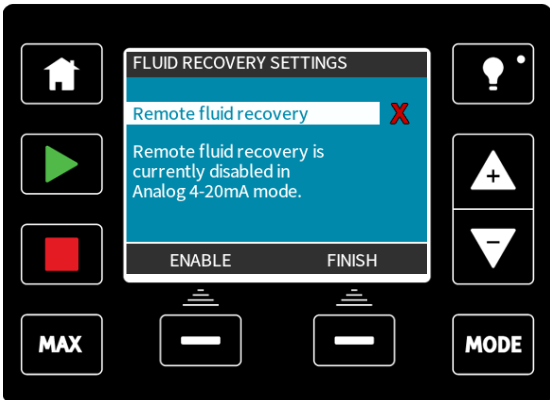

Select **ENABLE** to turn this functionality on. The reverse process can be used to switch the function off.

When this function is enabled, the pump operation can be reversed in analog 4-20mA mode by applying minimum 5V to maximum 24V to pin 5 of the pump input. The pump will operate at a reversed set speed proportional to the 4-20mA input applied to pin 3.

This operating method allows for fluid recovery from your delivery line. It should not be used for bulk fluid transfer.

Once enabled, remote fluid recovery should be operated in the following sequence:

1. Send a remote stop signal (apply 5 - 24 volts to input pin 1).
2. Apply 5 - 24 volt to pin 5 of the pump input.
3. Remove the remote stop signal.
4. Apply 4 - 20mA to the analog input. This will cause the pump to run in reverse at a speed proportional to the analog signal.
5. Apply remote stop signal when enough fluid has been recovered.
6. Remove the voltage at pin 5 of the pump inputs.
7. Remove the remote stop signal when you are ready to run forwards again.

21 Main menu (Manual, PROFIBUS, Universal and Universal+ only)

To access the main menu press the **MENU** button from one of the **HOME** screens or **INFO** screens.

For example: **Manual HOME screen**

Manual INFO screen

This will display the main menu as shown below. Use the **+/-** keys to move the selection bar between the available options.

Press **SELECT** to choose an option.

Press **EXIT** to return to the screen from where the **MENU** was called.

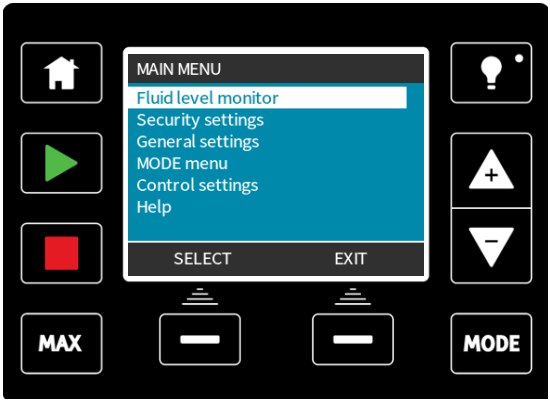

21.1 Fluid level monitor (Manual, PROFIBUS, Universal and Universal+ only)

The fluid level monitor can be used to estimate the fluid level left in your supply tank. When activated, the pump will display a bar on the home screen indicating the volume of fluid in the tank. As the pump meters fluid, the volume of fluid in the supply reservoir will reduce, the bar will track the reducing volume. The pump can be set up to output an alarm when a defined level of fluid is reached. This will warn the operator to change the fluid supply barrel or level to ensure that the pump does not run dry.

When the fluid level is estimated at zero the pump will stop.

On selection of this function from the main menu, it will ask you whether you wish to **ENABLE** the fluid level bar.

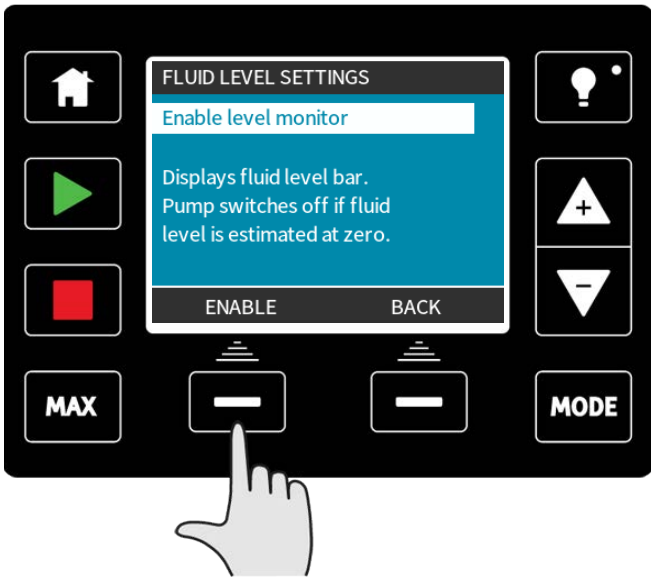

After pressing **ENABLE**, the pump will display the fluid level setup options.

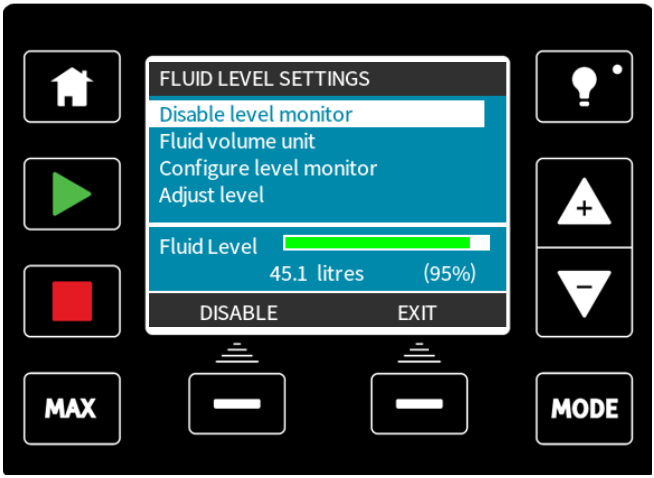

If you press **DISABLE** the pump will deactivate the fluid level monitor. The fluid bar will no longer appear on the **HOME** screens.

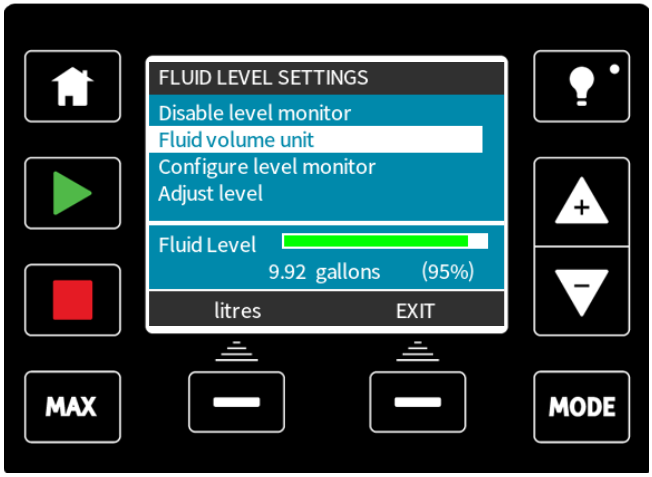

The fluid volume unit can be changed by pressing the **US GALLONS** or **LITRES** key, the key name will change depending upon the unit selected.

To configure the level monitor, select this option from the menu.

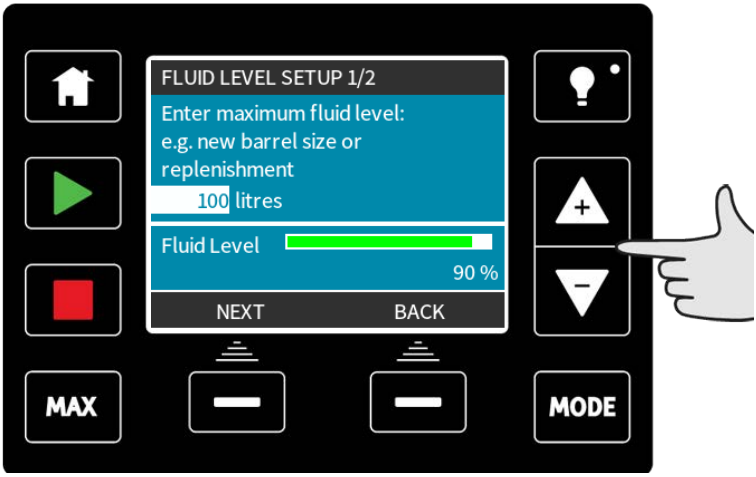

Enter the maximum level of your reservoir or supply container using the **+/-** keys to adjust the volume.

Press **NEXT** when you are happy you have the correct volume.

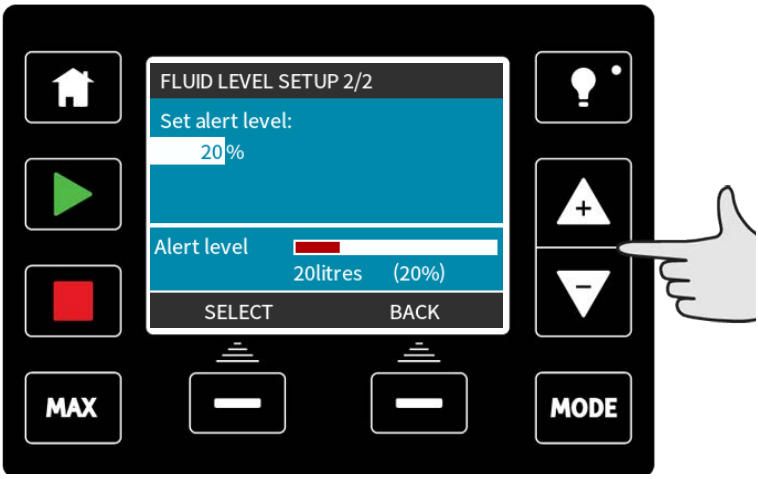

Now use the **+/-** keys to set the alert level. In the screen above the alert level is set to 20%. Press **SELECT** to return to the fluid level monitor menu.

If you need to adjust the volume of fluid in the tank, for example when re-filling, then press **SELECT** when the bar highlights the **Adjust level** option.

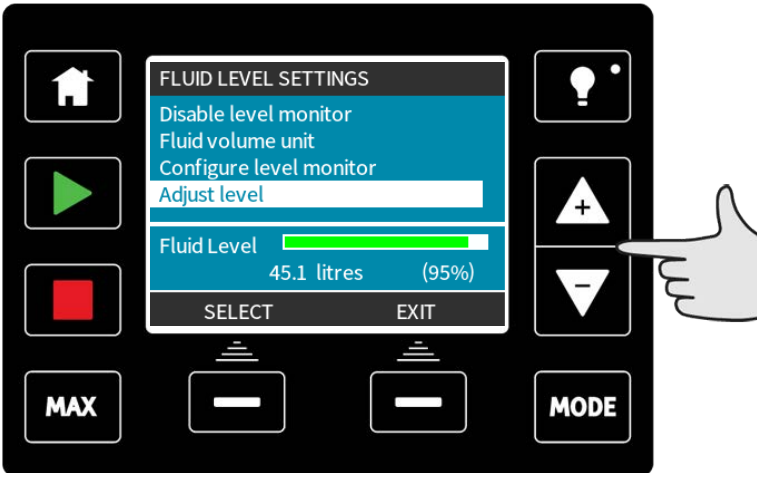

You can now use the **+/-** keys to adjust the level of fluid in the tank.

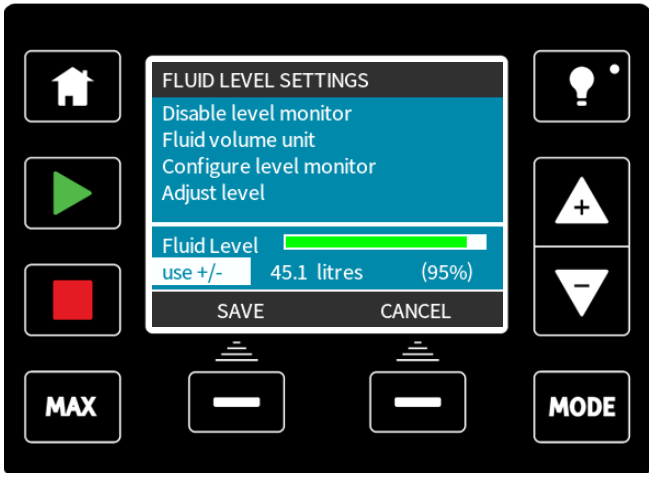

The accuracy of the fluid level monitor will improve with regular calibration of the pump.

21.2 Security settings (Manual, PROFIBUS, Universal and Universal+ only)

Security settings can be changed by selecting **SECURITY SETTINGS** from the **Main menu**.

Auto keypad lock

Press **ENABLE/DISABLE** to switch on/off the **Auto keypad lock**. When active the keypad will 'lock' after 20 seconds of inactivity.

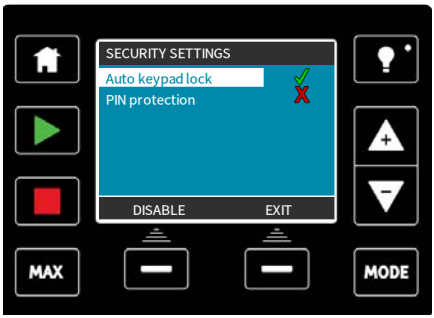

Once locked it will display the screen below when any key is pressed. To unlock the keypad press the two unlock keys together.

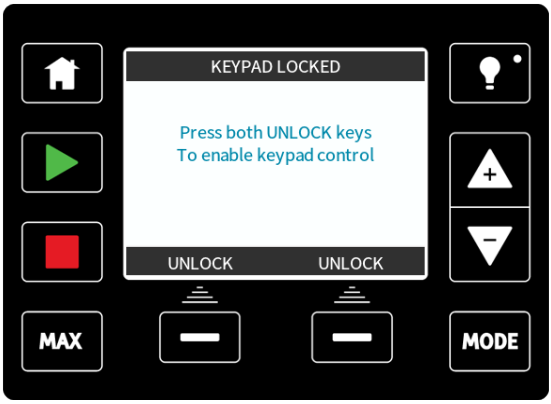

The padlock icon will appear on the operating mode home screen to show that keypad lock is activated.

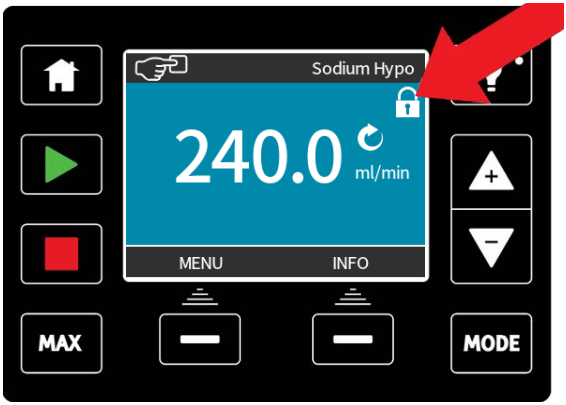

Note that the **STOP** and **BACKLIGHT** keys will always work whether the keypad is locked or not.

PIN protection

Using the **+/-** keys in the security settings menu, highlight **PIN protection**.

Press **ACTIVATE/DEACTIVATE** to switch on/off the **PIN protection**. When active, the PIN protection will request a PIN before allowing any change of operating mode settings, or entry to the menu.

Once a correct PIN has been entered, all settings can be changed. PIN protection will turn back on automatically after 20 seconds of no keypad activity.

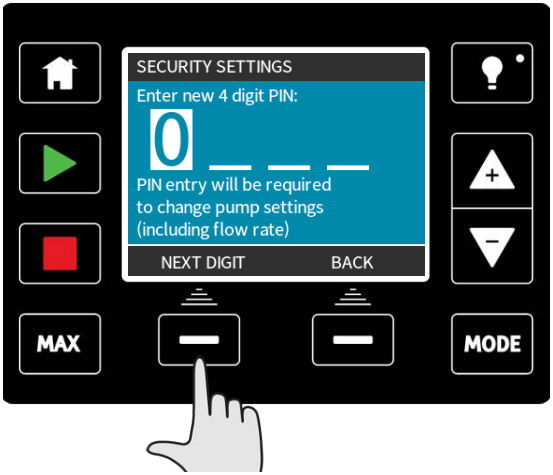

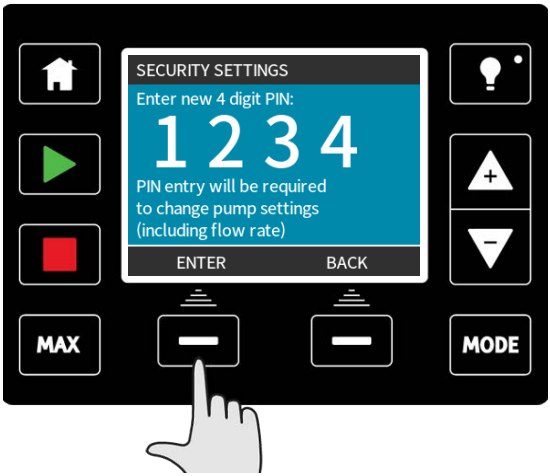

To define a four digit number for your PIN, use **+/-** to select each digit from 0-9. Once you have the required digit press the **NEXT DIGIT** key. After selecting the fourth digit press **ENTER**.

Now press **CONFIRM** to check that the number entered is the PIN you require. Press **CHANGE** to return to PIN entry.

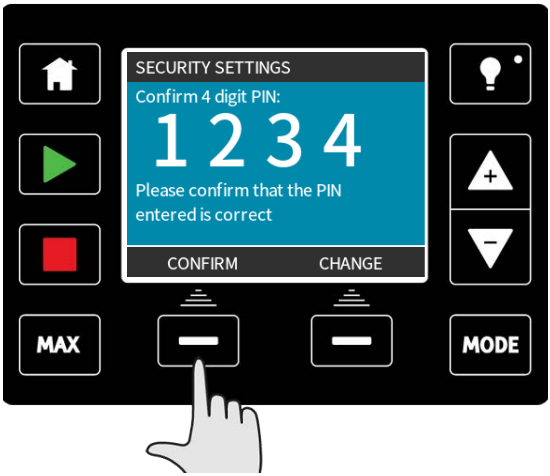

Pressing the **HOME** or **MODE** key at any time before you confirm your PIN will abort the process.

If you enter an incorrect PIN it will display the following screen:

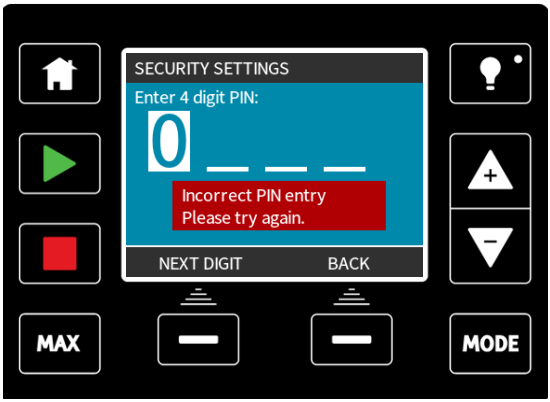

There is an override feature, should you forget your PIN. Please contact Watson-Marlow for details of how to reset the PIN.

21.3 General settings (Manual, PROFIBUS, Universal and Universal+ only)

To view the general settings menu, select **GENERAL SETTINGS** from the main menu.

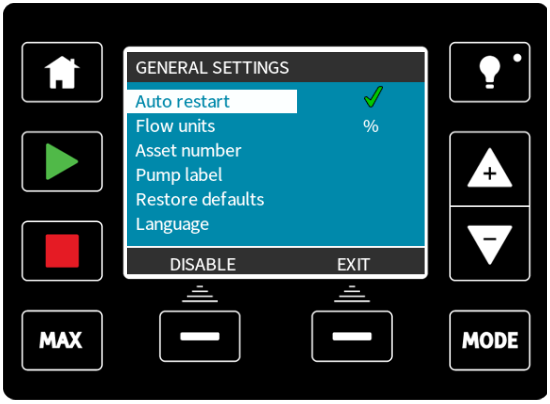

Auto restart

Press **ENABLE/DISABLE** to turn the auto restart feature on/off.

This pump offers an auto restart feature. If active on power loss, it restores the pump when power returns to the operating state it was in when power was lost. For example, if the pump was running in analog mode prior to power loss, it would return to the same operating mode and continue to run at a proportional speed to the analog input.

This pump offers an auto restart feature. If active on power loss, it restores the pump when power returns to the operating state it was in when power was lost. For example, if the pump was running in manual mode prior to power loss, it would return to the same operating mode and continue to run at the same speed.

If power is lost in the middle of a dose, when the power is returned it will continue and finish the interrupted dose.

Any pulses that were in memory before power loss will be remembered. Pulses received during power loss will be lost.

Do not use auto restart for more than 20 mains power starts per hour. We recommend remote control where a high number of starts is required.

The **!** icon is displayed on the home screens to indicate that the auto restart feature is active.

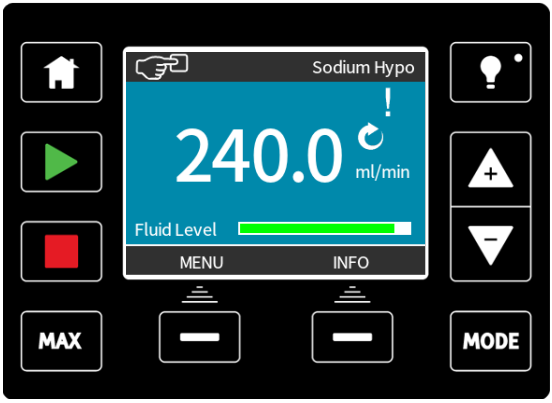

Flow units

The current chosen flow unit is displayed on the right hand side of the screen. To change flow units move the selection bar over the flow unit menu entry and press **SELECT**.

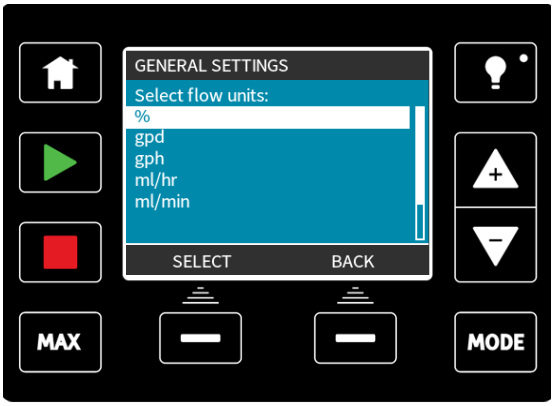

Use the **+/-** keys to move the selection bar over the required flow unit.

Press **SELECT** to define the flow units to use. All flow rates displayed on screens will now be in the chosen units.

Asset number

The asset number is a user defined 10 digit alphanumeric number which can be stored in the pump. This number can be re-called if required from the help screen, accessed from the main menu.

To define or edit the asset number, move the selection bar over the asset number menu entry and press **SELECT**. If an asset number has been previously defined, this will be displayed on screen to allow editing, otherwise the number display will be blank.

Use the **+/-** keys to scroll through the available characters for each digit. The available characters are 0-9, A-Z, and SPACE.

Press **NEXT** to move onto the next character, or **PREVIOUS** to move back to the previous character.

Press **FINISH** to save the entry and return to the general settings menu.

Pump label

The pump label is a user defined 20 digit alphanumeric label which is displayed in the header bar of the home screen. To define or edit the pump label, move the selection bar over the pump label menu entry and press **SELECT**. If a pump label has been previously defined, this will be displayed on screen to allow editing, otherwise it will display the default label "WATSON-MARLOW".

Use the **+/-** keys to scroll through the available characters for each digit. The available characters are 0-9, A-Z, and SPACE.

Press **NEXT** to move onto the next character, or **PREVIOUS** to move back to the last character.

Press **FINISH** to save the entry and return to the general settings menu.

Restore defaults

To restore the factory default settings, select **restore defaults** from the general settings menu.

There are two confirmation screens to ensure that this function is not carried out in error.

Press **CONFIRM** followed by **RE-CONFIRM** to reset the defaults.

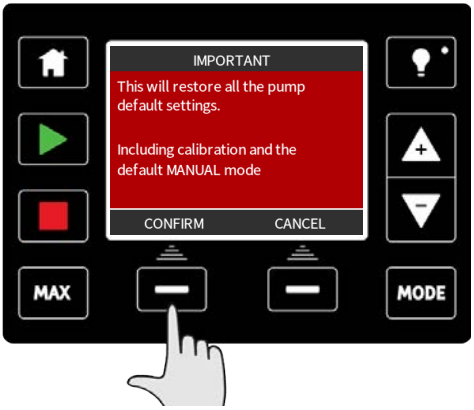

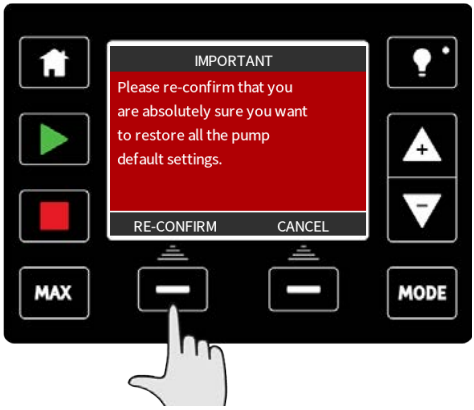

Language

Select **language** from the general settings menu to choose an alternative display language for the pump. The pump must be stopped before changing the language.

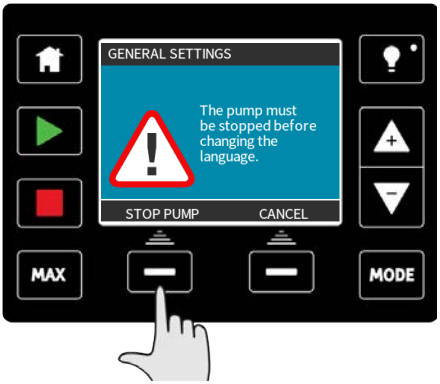

Use the **+/-** keys to move the selection bar to your required language. Press **SELECT** to confirm.

Your selected language will now be displayed on screen.

Press **CONFIRM** to continue, all displayed text will now appear in your chosen language.

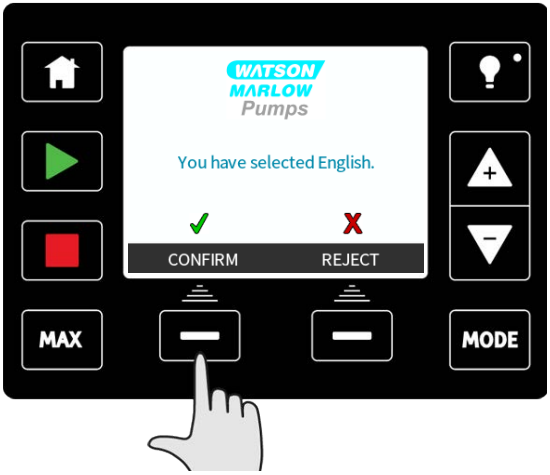

Press **REJECT** to return to the language choice screen.

21.4 MODE menu (Manual, PROFIBUS, Universal and Universal+ only)

Selecting **MODE menu** from the main menu will navigate you to the MODE menu. This is the same as pressing the **MODE** key. Please see "Switching between modes (Manual, PROFIBUS, Universal and Universal+ only)" on page 48 for further details.

21.5 Control settings (Manual, PROFIBUS, Universal and Universal+ only)

Select **CONTROL SETTINGS** from the main menu to access the sub menu shown below.

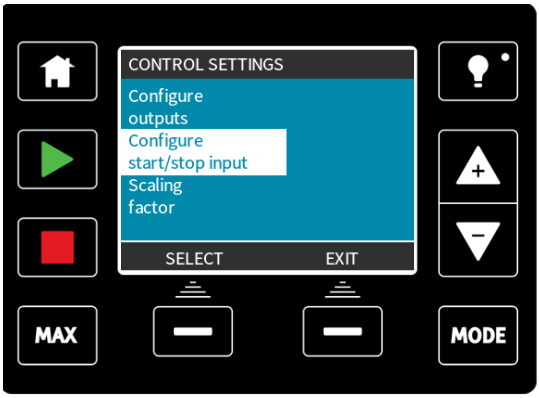

Use **+/-** keys to move the selection bar. Press **SELECT** to choose the required function.

Speed limit

The maximum speed the qdos30, qdos60 or qdos120 pump is capable of running at is 125 rpm

The maximum speed the qdos20 pump is capable of running at is 55 rpm.

Select **Speed limit** from the control settings menu to define a lower maximum speed limit for the pump.

Use the **+/-** keys to adjust the value and press **SAVE** to set.

Applying a speed limit automatically re-scales the analog speed control response.

This speed limit will be applied to all operating modes.

The effect of a 75rpm speed limit on user-defined 4-20mA response profiles

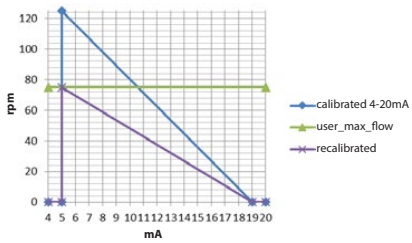

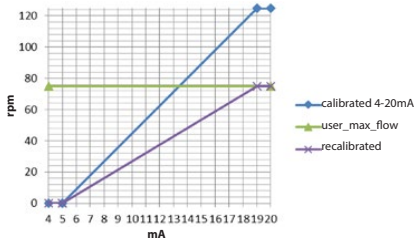

The effect of a 30rpm speed limit on user-defined 4-20mA response profiles

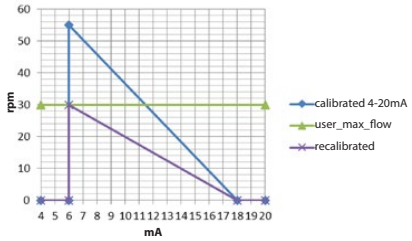

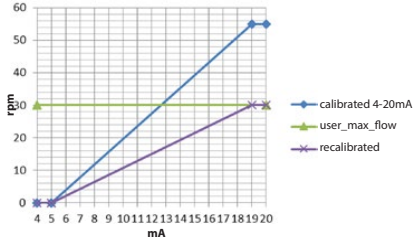

If you purchased your pump prior to 9 February 2017

Check your software version before using this the speed limit setting

Check the software version of the "main processor code" by following the instructions in section 18.6 Help.

If the software version is less than 2.0 then do not use this setting as an intermittent fault condition can result in the pump resetting the speed limit to 125rpm when the power is turned off to the pump.

If you require this functionality on a software version lower than 2.0 please use the 4-20mA calibration method described in Section 15 or contact Watson-Marlow aftersales department to discuss other control methods.

If the version is MKS-2.0 or higher, the speed limit setting may be used.

Reset run hours

Select **reset run hours** from the control settings menu.

Select **RESET** to zero the run hours counter. The run hours counter can be viewed by pressing **INFO** from your home screen.

Reset volume counter

Select **reset volume counter** from the control settings menu.

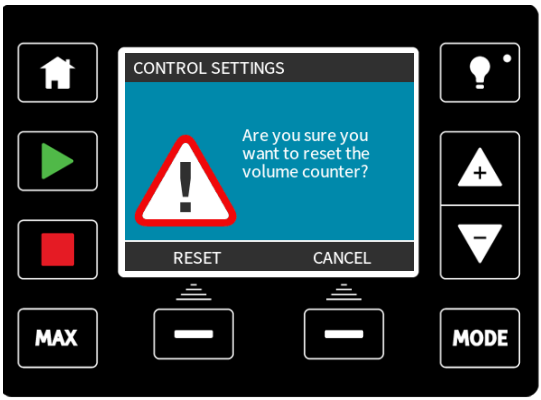

Select **RESET** to zero the volume counter. The volume counter can be viewed by pressing **INFO** from your home screen.

Invert alarm logic - Universal model

Select **invert alarm logic** from the control settings menu.

Select **ENABLE** to invert the alarm output. The default setting is high for healthy, low for alarm. It is recommended to invert the output for fail safe operation.

Configurable outputs - Universal+ model

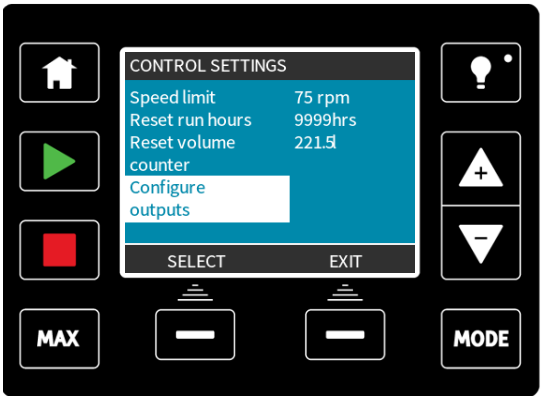

Select **Configure outputs** from the control settings menu.

Output 1 and Output 2

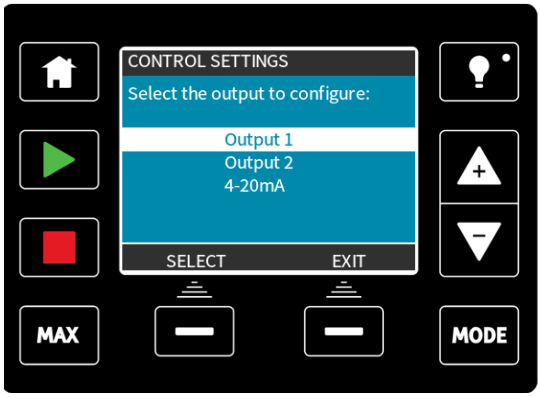

Use **+/-** and **SELECT** to choose which output to configure.

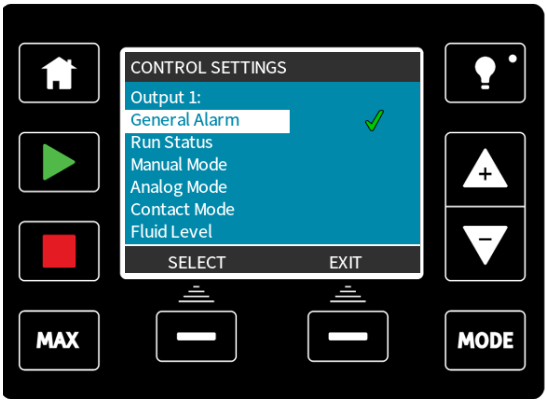

Use **+/-** and **SELECT** to choose which pump status you require for the chosen output. The tick symbol indicates the current setting.

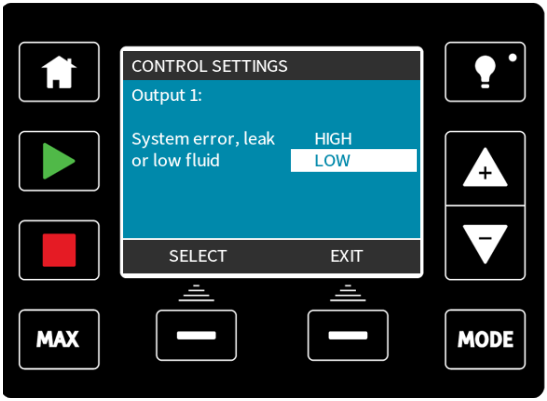

Use **+/-** and **SELECT** to choose the logic state of the chosen output.

Press **SELECT** to program the output or **Exit** to cancel.

4-20mA Output (Universal+ model only)

Select **4-20mA** to configure the pumps 4-20mA output response.

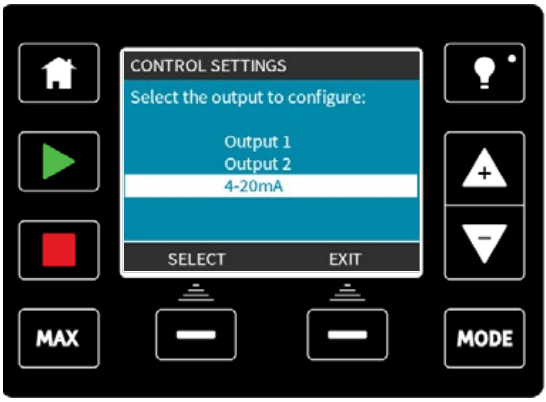

Use **+/-** and **SELECT** to choose the required setting

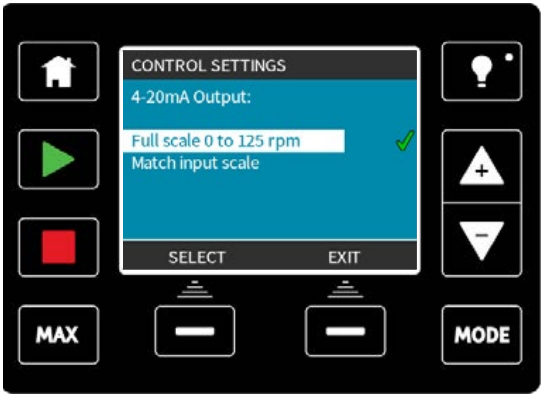

Full scale – The 4-20mA output will be based on the full speed range of the pump. At 0 rpm the pump will output 4mA. At maximum rpm the pump will output 20mA.

Match input scale – The 4-20mA output will be scaled to the same range as the 4-20mA input. If the 4-20mA input has been scaled to provide 4mA=0 rpm and 20mA=20 rpm then an input of 12mA will result in a set speed of 10rpm and an output of 12mA

Configurable Start/Stop input

Select **Configure start/stop input** from the menu.

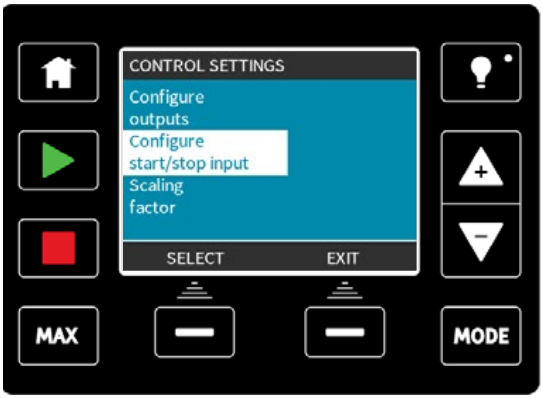

Use **+/-** and **SELECT** to configure the input setting. A low stop input is recommended as the pump will be stopped in the event of any loss of input signal.

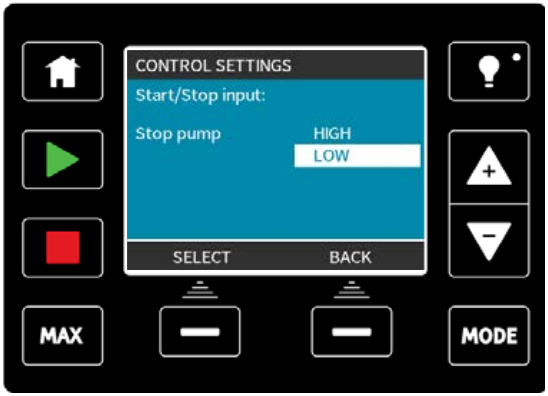

21.6 Help (Manual, PROFIBUS, Universal and Universal+ only)

Select **Help** from the main menu to access the help screens.

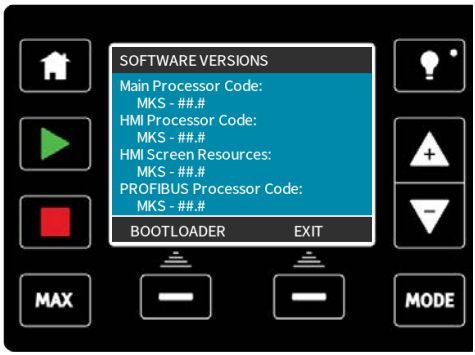

22 Status LEDs (Remote only)

The remote pump has LED icons on the front panel to indicate its status. A description of the icons and definition of each error state is provided in the table below.

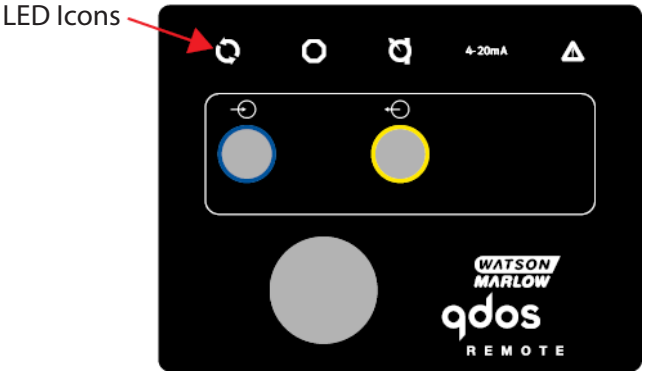

Status	Running	Remote stop	Change pumphead	4-20mA signal
Power on	**On**			
4–20mA in range	**On**			**On**
4–20mA high	**On**			**Flash**
4–20mA low	**On**			**Flash**
Remote stop		**On**		**Status as above**

LED key:

- Signal status
- Pump running
- Pump in standby condition
- Pump stopped

23 Troubleshooting

If the pump display remains blank when the pump is switched on, make the following checks:

- Check that mains power is available to the pump.
- Check the fuse in the wall plug if one is present.

If the pump runs but there is little or no flow, make the following checks:

- Check that fluid is supplied to the pump.
- Check for any kinks or blockages in the lines.
- Check that any valves in the lines are open.

23.1 Leak detection

If a leak is detected the pump will display the following message:

(Manual, PROFIBUS, Universal and Universal+ models)

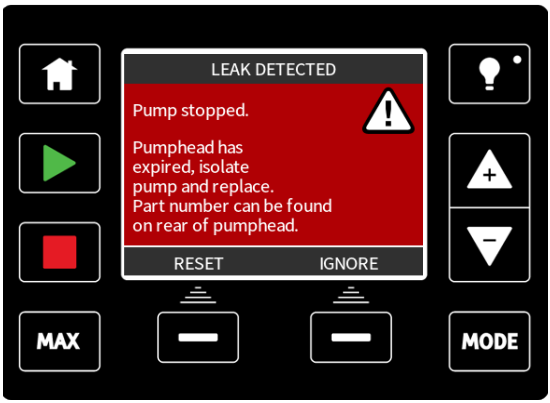

If a leak is detected, the following LED icon will display:

(Remote only)

Status	Running	Remote stop	Change pumphead	4-20mA signal	Error warning
Pumphead requires changing			On		

Follow the instructions in "Pumphead Replacement (qdos 30)" on page 112 "Pumphead Replacement (qdos 20, 60 and 120)" on page 117 to replace your pumphead.

If this message is repeated when power is cycled, or after the reset button has been pressed, remove the pumphead, check that the mounting face is clean and free of debris and refit the pumphead, taking care to ensure it is correctly orientated with the arrow pointing upwards.

If the message constantly repeats after several pumphead installations, then there may be a leak detection sensor failure. Please contact Watson-Marlow for repair.

If you need to bypass a faulty leak detection sensor then you can do so by pressing **IGNORE**. If the power is cycled, the leak detection sensor will be switched back on.

If the leak detector is **IGNORED** then the leak detection off icon will be displayed on the **HOME** screens.

23.2 Error codes

Note: For qdos remote refer to "Error Indication (Remote only)" on the facing page

If an internal error occurs, an error screen with a red background is displayed. **Note: Signal out of range** and **Leak detected** error screens report the nature of an external condition. They do not flash.

Error code	Error condition	Suggested action
Er 0	FRAM write error	Attempt to reset by switching power OFF / ON. Or seek support
Er 1	FRAM corruption	Attempt to reset by switching power OFF / ON. Or seek support
Er 2	FLASH write error during drive update	Attempt to reset by switching power OFF / ON. Or seek support
Er 3	FLASH corruption	Attempt to reset by switching power OFF / ON. Or seek support
Er 4	FRAM shadow error	Attempt to reset by switching power OFF / ON. Or seek support
Er 9	Motor stalled	Stop pump immediately. Check pumphead and tube. Power OFF / ON may reset. Or seek support
Er10	Tacho fault	Stop pump immediately. Power OFF / ON may reset. Or seek support

Error code	Error condition	Suggested action
Er14	Speed error	Stop pump immediately. Power OFF / ON may reset. Or seek support
Er15	Over current	Stop pump immediately. Power OFF / ON may reset. Or seek support
Er16	Over voltage	Stop pump immediately. Check supply. Power OFF/ON may reset
Er17	Under voltage	Stop pump immediately. Check supply. Power OFF/ON may reset
Er20	Signal out of range	Check analog control signal range. Trim signal as required. Or seek support
Er21	Over signal	Reduce the analog control signal
Err50	Communication error	Attempt to reset by switching power OFF / ON. Or seek support

23.3 Error Indication (Remote only)

If an internal error occurs, depending on the error one of the following LED icons will be displayed.

Status	Running	Remote stop	Change pumphead	4-20mA 4-20mA signal	Error warning
Major drive fault: return pump to factory					**On**
A. Motor stalled/wrong speed: check process/system and switch on/off to reset		**On**			**Flash**
B. Voltage error: switch on/off to reset pump					**Flash**

24 Technical support

Watson-Marlow Limited
Falmouth
Cornwall
United Kingdom
TR11 4RU

Telephone Number:	+44 (0)1326 370370
Email:	aftersales.uk@wmftg.com
Web:	www.wmftg.com

25 Drive maintenance

There are no user serviceable parts inside the pump. The unit should be returned to Watson-Marlow for service. See "Information for returning pumps" on page 10.

26 Pumphead Replacement (qdos 30)

The pumphead is a consumable part and cannot be serviced.

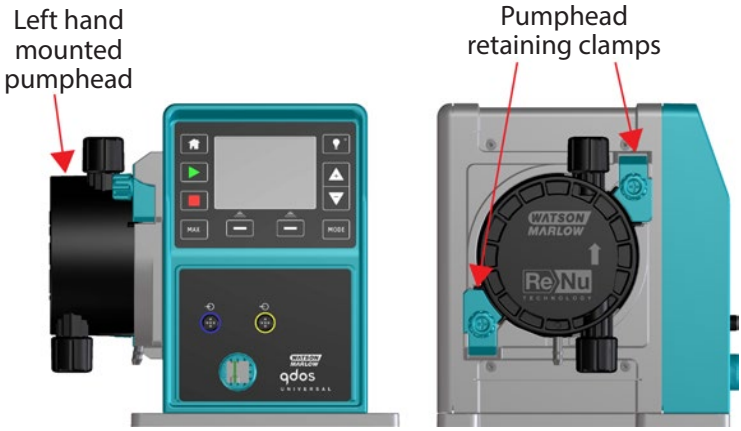

Ensure contaminated pumpheads are not shipped but disposed of locally according to regulations for contaminated items and health and safety procedures.

Always isolate the pump from the mains power supply before changing the pumphead, suction or discharge lines.

It is only possible to fit the pumphead in one orientation with the arrow pointing upwards

The pumphead retaining clamps should only be unlocked or locked by hand.

Note: In this manual, we have shown removal and replacement of the left-hand mounted pumphead. Replacing the right-hand mounted pumphead is the identical procedure.

Removing the pumphead

1. Drain down.
2. Ensure that there is no pressure in the pipeline.
3. Isolate the pump from the mains power supply.
4. Ensure that protective clothing and eye protection are worn if hazardous products have been pumped.

5. Remove input and output connections from the pumphead.

6. Fully loosen the two pumphead retaining clamps.

7. To disengage the pumphead from the retaining clamps, carefully detach the pumphead from the pump housing and rotate it in an anti-clockwise direction by approximately 15°.

8. Remove the pumphead from the pump housing.

9. Safely dispose of the used pumphead according to your own health and safety regulations. Take care to comply with any safety requirements of the chemical being pumped.

Fitting a new pumphead

Fitting a new pumphead is a reverse procedure of the pumphead removal.

1. Remove the new pumphead from its packaging.
2. Align the new pumphead with the pump drive shaft and slide into position on the pump housing.
3. Rotate the pumphead in a clockwise direction by approximately 15° to engage the retaining clamps.
4. Tighten the retaining simultaneously clamps to secure the pumphead into position.
5. Connect the input and output connections to the pumphead.

6. Apply mains power to the pump, press start and run the pumphead for a few revolutions.
7. Stop the pump and isolate it from the mains power supply, then tighten the clamps further if necessary.

26.1 Connecting interface tubing

Note: Please refer to the diagram below in conjunction to the text when connecting interface tubing to the pumphead.

Before connecting the interface tubing, ensure that the supplied Santoprene seals **(1)** are correctly fitted in the head ports **(1a)** and that the Santoprene seals and connector material is compatible with pumped fluid.

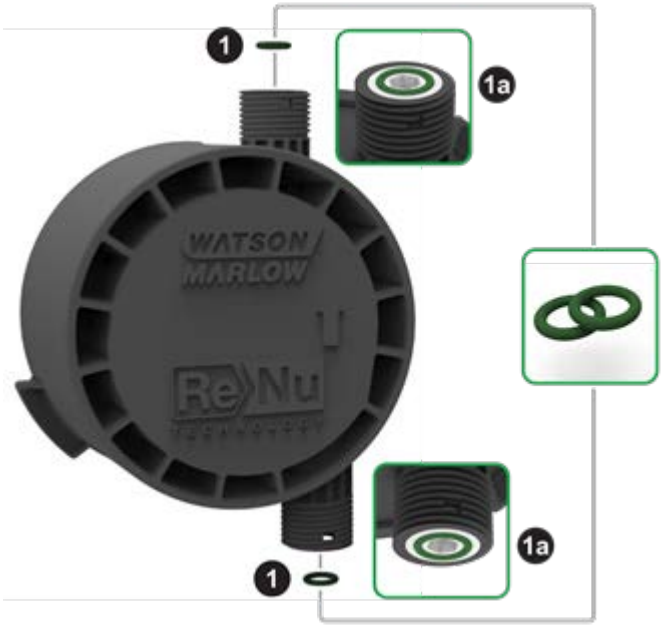

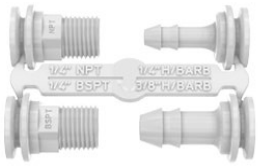

Hydraulic connector pack - polypropylene barb/threaded fittings

Hydraulic connector pack - PVDF barb/threaded fittings

Hydraulic connector pack - polypropylene compression fittings

Note: Hydraulic connector packs are optional accessories. See "Spares and accessories" on page 124.

Hose barbs

1. Detach the desired connector from the sprue **(2)**.
2. Place user connection collar over the chosen fitting and tighten onto the pumphead **(2a)**.
3. Press tube onto connector until it reaches the back face.
4. Secure with suitable retaining clip.

Threaded connectors

1. Detach the desired connector from the sprue **(3)**.
2. Place user connection collar over the chosen fitting and tighten onto the pumphead **(3a)** and **(3b)**.
3. When attaching the mating thread, restrain the connector using a 14mm spanner for the 1/4" BSPT **(3a)**, 9/16" spanner for the 1/4" NPT **(3b)**, 1/2" spanner for the 1/2" BSPT **(3a)** and 13mm spanner for the 1/2" NPT **(3b)**.

Note: It may be necessary to use a thread sealing tape to get a leak-proof seal.

Compression fittings

1. Select the correct compression fittings for the size of tube using the markings on the sprue and detach both the relevant parts **(4)**.
2. Cut the end of the tubing so that it is square **(4a)** and **(4b)** not (4e).
3. Slide the user connection collar onto the tube.
4. Slide the compression ring onto the tube ensuring the inner step is facing the cut end. See **(4a)** and **(4b)** in the diagram on the following page for correct orientation, not (4c) or (4d).
5. Press the tube onto the cone until it reaches the back face **(4a)** and **(4b)** not (4f) (it may be necessary to widen the end of the tube).
6. Whilst continuing to hold the tube against the back face of the cone, slide the compression ring and user connection collar back down the tube and tighten onto the pumphead **(4a)** and **(4b)**.

The pump is now ready for use.

Fluid overflow

- When a leak is detected, the leak detection sensor will stop the pump. In the unlikely event of a sensor failure, the safety overflow provides a safe leak path for the mixture of the fluid and lubricant to be removed.
- The user is responsible for ensuring that this overflow is connected to a compatible vented storage container to contain the waste fluid.

Do not block the drain port of the ReNu pumphead.

27 Pumphead Replacement (qdos 20, 60 and 120)

The pumphead is a consumable part and cannot be serviced.

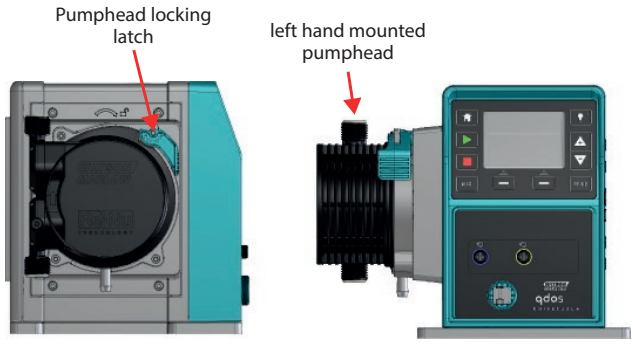

Ensure contaminated pumpheads are not shipped but disposed of locally according to regulations for contaminated items and health and safety procedures.

Always isolate the pump from the mains power supply before changing the pumphead, suction or discharge lines.

It is only possible to fit the pumphead in one orientation with the arrow pointing upwards

The pumphead retaining latch should only be unlocked or locked by hand.

Note: In this manual, we have shown removal and replacement of the left-hand mounted pumphead. Replacing the right-hand mounted pumphead is the identical procedure.

Removing the pumphead

1. Drain down.
2. Ensure that there is no pressure in the pipeline.
3. Isolate the pump from the mains power supply.
4. Ensure that protective clothing and eye protection are worn if hazardous products have been pumped.

5. Remove input and output connections from the pumphead.

6. Release the pumphead retaining lever.

7. To disengage the pumphead from the drive, rotate it in a clockwise direction by approximately 15°.

8. Safely dispose of the used pumphead according to your own health and safety regulations. Take care to comply with any safety requirements of the chemical being pumped.

Fitting a new pumphead

Fitting a new pumphead is a reverse procedure of the pumphead removal.

1. Remove the new pumphead from its packaging.
2. Align the new pumphead with the pump drive shaft and slide into position on the pump housing.
3. Rotate the pumphead in an anti-clockwise direction by approximately 15° to engage the retaining lugs.
4. Lock the pumphead into position using the pumphead locking latch.
5. Connect the input and output connections to the pumphead.
6. Apply mains power to the pump, press start and run the pumphead for a few revolutions.
7. Stop the pump and isolate it from the mains power supply, then recheck the retaining lever is still correctly locked in position.

27.1 Connecting interface tubing

Note: Please refer to the diagram below in conjunction to the text when connecting interface tubing to the pumphead.

Before connecting the interface tubing, ensure that the supplied Santoprene seals **(1)** are correctly fitted in the head ports **(1a)** and that the Santoprene seals and connector material is compatible with pumped fluid.

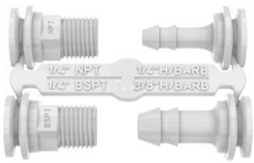

Hydraulic connector pack - polypropylene barb/threaded fittings

Hydraulic connector pack - PVDF barb/threaded fittings

Hydraulic connector pack - polypropylene compression fittings

Note: Hydraulic connector packs are optional accessories. See "Spares and accessories" on page 124.

Hose barbs

1. Detach the desired connector from the sprue **(2)**.
2. Place user connection collar over the chosen fitting and tighten onto the pumphead **(2a)**.
3. Press tube onto connector until it reaches the back face.
4. Secure with suitable retaining clip.

Threaded connectors

1. Detach the desired connector from the sprue **(3)**.
2. Place user connection collar over the chosen fitting and tighten onto the pumphead **(3a)** and **(3b)**.
3. When attaching the mating thread, restrain the connector using a 14mm spanner for the 1/4" BSPT **(3a)**, 9/16" spanner for the 1/4" NPT **(3b)**, 1/2" spanner for the 1/2" BSPT **(3a)** and 13mm spanner for the 1/2" NPT **(3b)**.

Note: It may be necessary to use a thread sealing tape to get a leak-proof seal.

Compression fittings

1. Select the correct compression fittings for the size of tube using the markings on the sprue and detach both the relevant parts **(4)**.
2. Cut the end of the tubing so that it is square **(4a)** and **(4b)** not (4e).
3. Slide the user connection collar onto the tube.
4. Slide the compression ring onto the tube ensuring the inner step is facing the cut end. See **(4a)** and **(4b)** in the diagram on the following page for correct orientation, not (4c) or (4d).
5. Press the tube onto the cone until it reaches the back face **(4a)** and **(4b)** not (4f) (it may be necessary to widen the end of the tube).
6. Whilst continuing to hold the tube against the back face of the cone, slide the compression ring and user connection collar back down the tube and tighten onto the pumphead **(4a)** and **(4b)**.

The pump is now ready for use.

Fluid overflow

- When a leak is detected, the leak detection sensor will stop the pump. In the unlikely event of a sensor failure, the safety overflow provides a safe leak path for the mixture of the fluid and lubricant to be removed.
- The user is responsible for ensuring that this overflow is connected to a compatible vented storage container to contain the waste fluid.

Do not block the drain port of the ReNu pumphead.

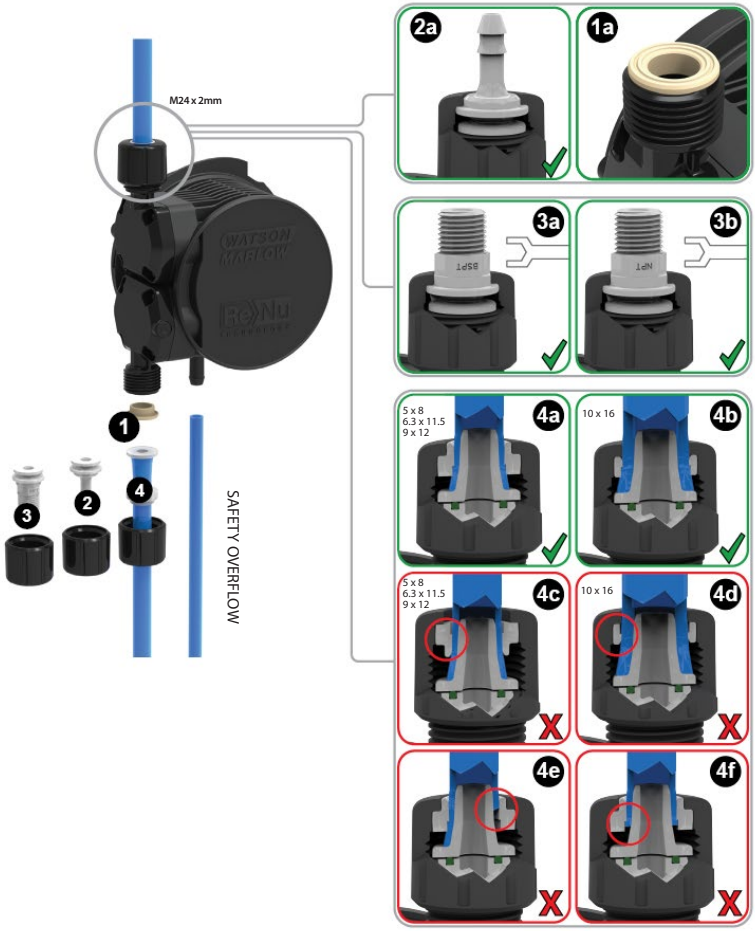
M24 x 2mm
WATSON MARLOW
ReNu
1
2
3
4
SAFETY OVERFLOW
2a
1a
3a
3b
BSPT
NPT
5 x 8
6.3 x 11.5
9 x 12
4a
10 x 16
4b
5 x 8
6.3 x 11.5
9 x 12
4c
10 x 16
4d
4e
4f

28 Ordering information

28.1 Pump part numbers

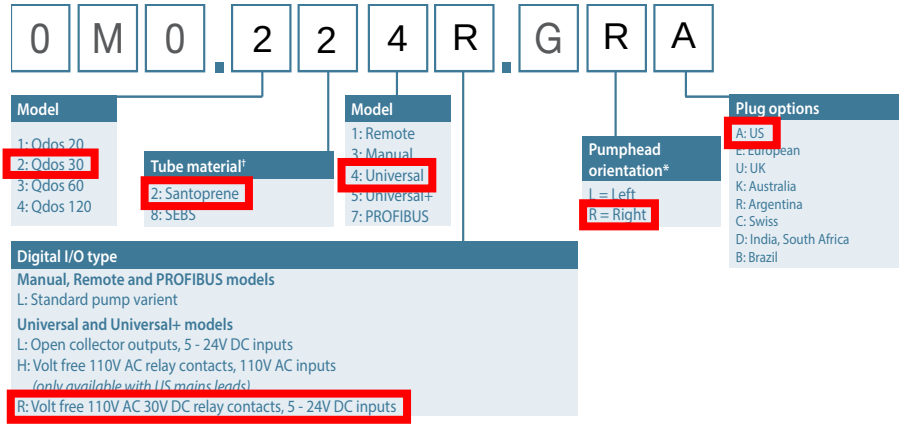

* The pumphead side location is required when ordering. The left/right perspective assumes the user is looking at the front of the pump. The pump in the dimensions diagram is considered a pumphead located to the left.

** Important note: The ReNu pumphead contains lubricant. It is the user's responsibility to comply with local health and safety regulations, including ensuring chemical compatibility between the lubricant and the duty fluid before use. The standard lubricant is PFPE. The qdos30 standard lubricant is silicone oil.

† To choose the best tube for your duty fluid please use the chemical compatibility chart at www.qdospumps.com

28.2 Spares and accessories

Image	Description		Part number
	ReNu Santoprene pumphead (PFPE lubricant)	qdos30	0M3.2200.PFP
		qdos60	0M3.3200.PFP
		qdos120	0M3.4200.PFP
	ReNu SEBS pumphead (PFPE lubricant)	qdos20	0M3.1800.PFP
		qdos30	0M3.2800.PFP
		qdos60	0M3.3800.PFP
	Hydraulic connection pack, polypropylene compression fittings		0M9.221H.P01
	Hydraulic connection pack, polypropylene barb/threaded fittings, 1/4" hose barb, 3/8" hose barb, 1/4" BSP, 1/4" NPT		0M9.221H.P02
	Hydraulic connection pack, PVDF barb/threaded fittings, 1/4" hose barb, 3/8" hose barb, 1/4" BSP, 1/4" NPT		0M9.221H.F02
	Hydraulic connection pack, polypropylene, threaded fittings, 1/2" BSP		0M9.401H.P03
	Hydraulic connection pack, polypropylene, threaded fittings, 1/2" NPT		0M9.401H.P04

Image	Description	Part number
	Hydraulic connection pack, polypropylene, 1/2” hose barb	0M9.401H.P05
	Hydraulic connection pack, PVDF, threaded fittings, 1/2” BSP	0M9.401H.F03
	Hydraulic connection pack, PVDF, threaded fittings, 1/2” NPT	0M9.401H.F04
	Hydraulic connection pack, PVDF, 1/2” hose barb	0M9.401H.F05
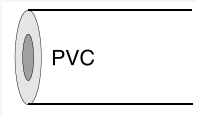	Interface tubing, pvc 6.3x11.5mm, 2m (6.5ft) length	0M9.2222.V6B
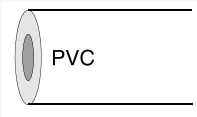	Interface tubing, pvc 10x16mm, 2m (6.5ft) length	0M9.2222.VAD
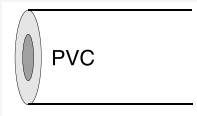	Interface tubing, pvc 6.3x11.5mm, 5m (16ft) length	0M9.2225.V6B
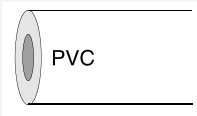	Interface tubing, pvc 10x16mm, 5m (16ft) length	0M9.2225.VAD
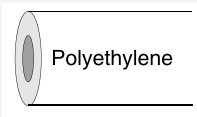	Interface tubing, polyethylene 9x12mm, 2m (6.5ft) length	0M9.2222.E9C

Image	Description	Part number
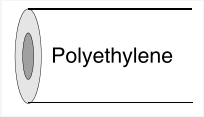	Interface tubing, polyethylene 5x8mm, 2m (6.5ft) length	0M9.2222.E58
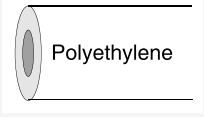	Interface tubing, polyethylene 9x12mm, 5m (16ft) length	0M9.2225.E9C
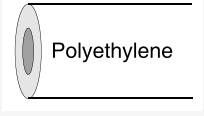	Interface tubing, polyethylene 5x8mm, 5m (16ft) length	0M9.2225.E58
	Replacement baseplate	0M9.223M.X00
	Input lead, M12 IP66, 3m (10ft) length	0M9.203X.000
	Output lead, M12 IP66, 3m (10ft) length	0M9.203Y.000
	HMI protective cover	0M9.203U.000
	Hydraulic spares kit, Viton O-rings, connection collars SK 9001	SK 9001
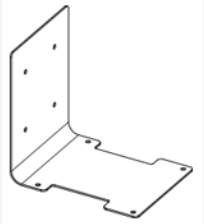	Wall bracket	0M9.004M.S00

29 Performance data

29.1 Pumping conditions

For precise and repeatable performance it is important to calibrate your pump on a regular basis.

Actual flow rates achieved may vary to those displayed on the screen because of changes in temperature, viscosity, inlet and discharge pressures, system configuration and pumphead performance against time. For the highest accuracy it is advisable to calibrate the pump on a regular basis.

Where discharge pressures are quoted, they are the root mean square (RMS) discharge line pressures.

29.2 Pressure capability

qdos120 can be operated continuously at discharge pressures of up to 4 bar (60psi)

qdos20, qdos30 and qdos60 can be operated continuously at discharge pressures of up to 7 bar (100psi).

qdos30 can be operated at discharge pressures of up to 10 bar (145 psi), however flowrate and pumphead life will be affected.

29.3 Dry running

The pump will continue to operate when there is gas present in the suction line and will maintain prime in these conditions. The pump can be run dry, however flow rate and pumphead life will be affected.

29.4 Pumphead life

Application factors that influence pumphead life are pump speed, chemical compatibility and viscosity of the duty fluid and suction and discharge pressure.

29.5 DC power supply option - input characteristics

Parameter input supply	Limits			Units	Comment
	Min	Nom	Max		
Operating limits at cable ring terminals	10.4		32	VDC	At full discharge/charge
Maximum rated input current		15.2		A	At 10.5V/130W
Maximum rated input current		9.5		A	At 24V/200W
Inrush current		17		A	No Load
Inrush current duration		20		mS	
Efficiency @ ring terminals	87	91	95	%	100W@10/12/24V
Typical qdos pump power required	5		120	W	qdos 20, 30, 60, 120
Maximum rated input power			200	W	

29.6 Performance curves

The graphs below show flow rates for suction and discharge pressures for the pumphead.

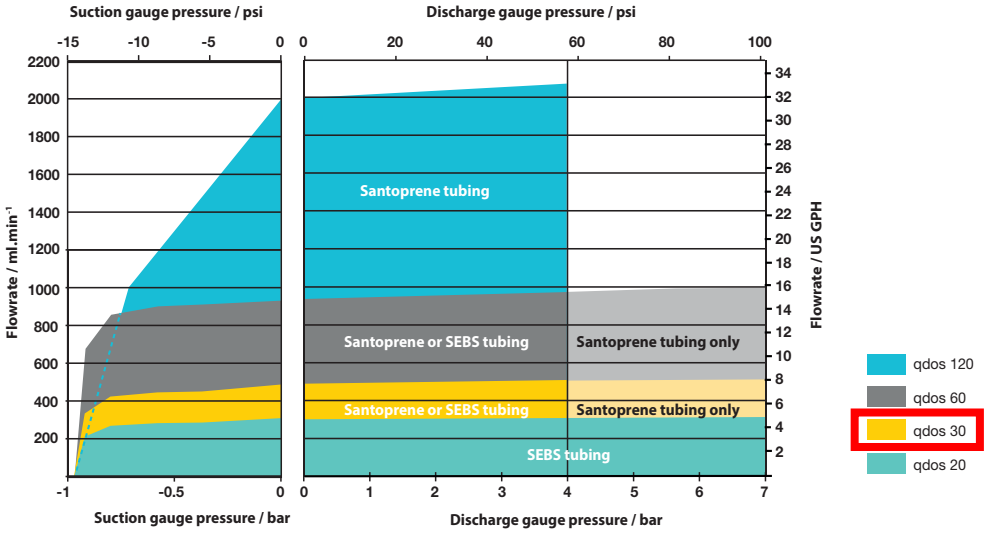

30 Trademarks

Watson-Marlow, qdos, qdos20, qdos30, qdos60, qdos120 and ReNu are trademarks of Watson-Marlow Limited.

31 Publication history

m-qdos-en-02
Watson-Marlow qdos 20, 30 60 and 120 User Manual
First published 09 2018

SCOPE

23267669 - VZBE-1/2-V60-DFPD-SA-CMSX

#	Part no.	Type	Designation	Links
1	8047636	DFPD-40-RP-90-RS60-F04	semi-rotary drive	
2	8082117	DARQ-R-A-S11-S9-11	reducing sleeve	
3	4809117	VZBE-1/2-T-63-T-2-F0304-V15V15	ball valve	
4	8083062	VAVC-F7-B-V60-1/2"	v-port ball	
5	2197135	DARQ-K-P-A1-F05-20-R1	mounting bridge	
6	3929370	CMSX-P-S-C-U-F1-S-50-A	positioner	
7	1206622	AMTE-M-H-G18	silencer	
8	1205860	AMTE-M-LH-G18	silencer	
9	558662	NPQM-D-G18-Q6-P10	push-in fitting	
10	558709	NPQM-L-G18-Q6-P10	push-in L-fitting	

semi-rotary drive
DFPD-40-RP-90-RS60-F04

Part number: 8047636

FESTO

single-acting, rack and pinion design, connection pattern to NAMUR VDI/VDE 3845 for mounting solenoid valves, position sensors and positioners, standard connection to fitting ISO 5211.

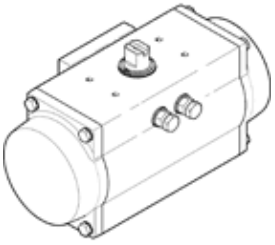

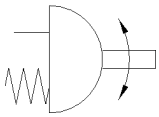

Data sheet

Feature	Value
Size of actuator	40
Flange hole pattern	F04
Swivel angle	90 deg
End-position adjustment range at 0°	-5 ... 5 deg
End-position adjustment range at 90°	-5 ... 5 deg
Shaft connection depth	12 mm
Fitting connection conforms to standard	ISO 5211
Assembly position	Any
Mode of operation	single-acting
Design structure	Rack and pinion
Closing direction	right-closing
Valve connection conforms to standard	VDI/VDE 3845 (NAMUR)
Connection for positioner and position sensor conforms to standard	VDI/VDE 3845 size AA 1
Safety Integrity Level (SIL)	Product can be used in SRP/CS up to SIL 2 (high demand)
Operating pressure	2 ... 8 bar
Nominal operating pressure	6 bar
CE mark (see declaration of conformity)	to EU directive explosion protection (ATEX)
Certificate issuing department	TÜV Rheinland
ATEX category Gas	II 2G
ATEX category Dust	II 2D
Explosion ignition protection type Gas	Ex h IIC T4 Gb X
Explosion ignition protection type Dust	Ex h IIIC T105°C Db X
Explosion-proof ambient temperature	-20°C <= Ta <= +80°C
Operating medium	Compressed air in accordance with ISO8573-1:2010 [7:4:4]
Note on operating and pilot medium	Pressure dew point 10°C below ambient temperature/temperature of medium Lubricated operation possible (subsequently required for further operation)
Storage temperature	-20 ... 60 °C
Ambient temperature	-20 ... 80 °C
Torque at rated operating pressure and 0° rotation angle	28 Nm
Torque at nominal operating pressure with 90° swivel angle	14.5 Nm
Note about the torque	The operating torque of the actuator must not be higher than the maximum permissible torque listed in ISO 5211, with reference to the size of the mounting flange and of the coupling.
Spring return torque with 0° swivel angle	13.8 Nm
Spring return torque at 90°	27.2 Nm
Air consumption at 6 bar per cycle 0°-90°-0°	1.5 l
Product weight	2,180 g
Shaft connection	T11
Pneumatic connection	G1/8
Materials note	Conforms to RoHS
Material of connecting plate	Anodised wrought aluminium alloy

Feature	Value
Material cover	Die-cast aluminium, coated
Material seals	NBR
Material spring	Spring steel
Material housing	Anodised wrought aluminium alloy
Material piston	Aluminium die cast
Material bearing	POM
Material cam	Stainless steel casting
Material screws	High alloy steel, non-corrosive
Material shaft	Steel, nickel-plated

reducing sleeve
DARQ-R-A-S11-S9-11

Part number: 8082117

for adapting the drive shaft to the process valve.

Data sheet

Feature	Value
Length	11 mm
Container size	1
Design structure	Internal square and external octagon Reducing sleeve
Corrosion resistance classification CRC	2 - Moderate corrosion stress
Product weight	5 g
Connection 1, function	Drive outlet
Connection 1, design	SW11
Connection 2, function	Reducing outlet
Connection 2, design	SW9
Materials note	Contains PWIS substances Conforms to RoHS
Material sleeve	Sintered steel, stainless

ball valve
VZBE-1/2-T-63-T-2-F0304-V15V15

Part number: 4809117
☆ Core product range

Stainless steel, 2/2-way, nominal width 1/2", top flange F0304, PN63, ASME B1.20.1 - NPT.

Festo is only a retailer of this product, not the manufacturer.

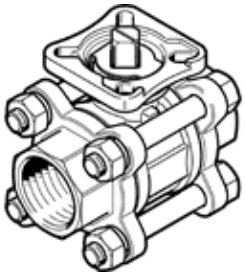

Data sheet

Feature	Value
Design structure	2-way ball valve
Type of actuation	mechanical
Sealing principle	soft
Assembly position	Any
Mounting type	Line installation
Process valve connection	1/2 NPT
Switching position indicator	Slot direction = flow direction
Flange hole pattern	F0304
Inside diameter	15 mm
Nominal diameter DN	15
Valve function	2/2
Flow direction	reversible
Nominal pressure of process valve	63
Breakaway torque at differential pressure, nominal pressure, process valve PN	7 Nm
Based on the standard	ASME B1.20.1 ISO 5211
Medium	Vapour Compressed air in accordance with ISO8573-1:2010 [-:-:-] Inert gases Water Neutral fluids
Medium temperature	-20 ... 200 °C
Flow rate Kv	8.5 m3/h
Materials note	Contains PWIS substances Conforms to RoHS
Material housing	Stainless steel casting
Material number for housing	1.4408
Material seat seal	PTFE
Material seals	FPM PTFE
Material ball	Stainless steel casting
Material number for ball	1.4408
Material shaft	High alloy steel, non-corrosive
Material number for shaft	1.4401
Product weight	560 g
Authorisation	CRN
Corrosion resistance classification CRC	4 - Very high corrosion stress

v-port ball
VAVC-F7-B-V60-1/2"

Part number: 8083062

Data sheet

Feature	Value
Nominal diameter DN	15
Corrosion resistance classification CRC	4 - Very high corrosion stress
Product weight	37.2 g
Materials note	Contains PWIS substances Conforms to RoHS
Material shut-off element	Stainless steel casting

mounting bridge
DARQ-K-P-A1-F05-20-R1

Part number: 2197135
★ Core product range

For mounting positioner CMSX on standard actuators to VDI/VDE 3845, size 30x80 mm, height 20 mm

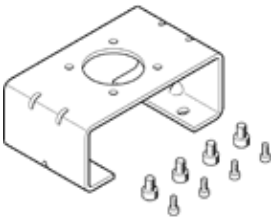

Data sheet

Feature	Value
Size	20
Corrosion resistance classification CRC	2 - Moderate corrosion stress
Product weight	350 g
Materials note	Contains PWIS substances Conforms to RoHS
Material coupling	High alloy steel, non-corrosive
Material mounting adapter	High alloy steel
Material screws	High alloy steel, non-corrosive

positioner
CMSX-P-S-C-U-F1-S-50-A

Part number: 3929370
★ Core product range

electropneumatic, for single-acting pneumatic quarter turn actuators, standard nominal flow rate 50 l/min, opening/closing regulating action safety function, 4-wire, power supply 24 VDC, setpoint input 0/4-20 mA, 0-10 V, position feedback signal 4...20 mA.

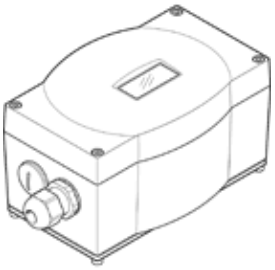

Data sheet

Feature	Value
Design structure	Digital electropneumatic positioner
Mode of operation	single-acting
Safety-relevant design characteristics	Safety position - pneumatic outlet 4 exhausted
Assembly position	Any
Mounting type	with accessories
Measuring method: displacement encoder	Potentiometer
Sensing range	0 ... 100 deg
Display	7-segment LCD-Display With background illumination
Setting options	Via display and buttons
Size of the dead zone	0.5 ... 10 %
Operating pressure	3 ... 8 bar
Operating medium	Compressed air in accordance with ISO8573-1:2010 [7:4:4]
Note on operating and pilot medium	Lubricated operation not possible
Standard nominal flow rate	50 l/min
Pneumatic connection	G1/8
Nominal operating voltage DC	24 V
Operating voltage range DC	21.6 ... 26.4 V
Max. current consumption	600 mA
Polarity protected	For operating voltage connections
Analogue inputs, signal range	0 - 10 V 0 - 20 mA 4 - 20 mA
Analogue inputs, linearity error at 25°C	0,5%
Analogue inputs, temperature coefficient	‹ 0.02 %FS/K
Analogue inputs, resolution	16 bit
Analogue inputs, overload protection	Yes
Analogue inputs, galvanic isolation	No
Analogue outputs, signal range	4 - 20 mA
Analogue outputs, max. load resistance	‹= 600 Ohm
Analogue outputs, linearity error at 25° C	0,5%
Analogue outputs, temperature coefficient	‹ 0.02 %FS/K
Analogue outputs, resolution	12 bit
Analogue outputs, reverse polarity protection	Yes
Analogue outputs, short circuit current rating	Yes
Analogue outputs, overload protection	Yes
Analogue outputs, galvanic isolation	No
Input characteristics	to IEC 61131-2, type 3
Switching input	PNP NPN
Digital inputs, reverse polarity protection	Yes

Feature	Value
Digital inputs, electrical isolation	Yes, via optocoupler
Digital outputs, reverse polarity protection	Yes
Switch output	3 x PNP or 3 x NPN, switchable
Digital outputs, output current	100 mA
Digital outputs, short-circuit proof	Yes
Digital outputs, overload proof	Yes
Digital outputs, electrical isolation	Yes, via optocoupler
Electrical connection 1, function	2x digital inputs 3x digital output Analogue output Analogue input Power supply Power supply load
Electrical connection 1, connection type	Terminal strip
Electrical connection 1, connection technology	Screwed terminal
Electrical connection 1, number of pins/wires	14
Electrical connection 1, tightening torque	0.6 Nm
Electrical connection 1, conductor cross section	‹ 1.5 mm2
Cable gland connection	M20x1.5 electrical connection 1
Permissible cable diameter	7 - 13 mm electrical connection 1
Max. line length	30 m for electrical connection 1
Ambient temperature	-5 ... 60 °C
Storage temperature	-20 ... 60 °C
Relative air humidity	93 %
Protection class	IP65
Shock resistance	Shock test with severity level 1 in accordance with FN 942017-5 and EN 60068-2-27 as per EN 60068-2-29
Vibration resistance	Transport application test at severity level 2 in accordance with FN 942017-4 and EN 60068-2-6 as per EN 60068-2-6
Degree of contamination	3
Authorisation	RCM Mark
CE mark (see declaration of conformity)	to EU directive for EMC in accordance with EU RoHS directive
Material housing	Reinforced PC
Material screen	PC
Material sub-base	Wrought Aluminium alloy Anodised
Material shaft	High alloy steel, non-corrosive
Material coupling	High alloy steel, non-corrosive
Material screws	High alloy steel, non-corrosive
Material seals	NBR
Material cable connection	PA
Material blanking plug	PA
Materials note	Conforms to RoHS
Product weight	970 g
Dimensions W x L x H	190 mm x 105 mm x 130 mm

silencer
AMTE-M-H-G18
Part number: 1206622

FESTO

Suitable for reducing noise at the exhaust ports of pneumatic systems.

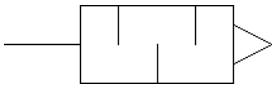

Data sheet

Feature	Value
Assembly position	Any
Container size	20
Operating pressure	0 ... 10 bar
Flow rate to atmosphere	615 l/min
Operating medium	Compressed air in accordance with ISO8573-1:2010 [7:-:-]
Note on operating and pilot medium	Lubricated operation possible
Corrosion resistance classification CRC	1 - Low corrosion stress
Sound pressure level	92 dB(A)
Ambient temperature	-40 ... 80 °C
Product weight	5 g
Pneumatic connection	G1/8
Material of silencer insert	Bronze
Material of threaded plug	Brass
Materials note	Conforms to RoHS

silencer
AMTE-M-LH-G18

Part number: 1205860
★ Core product range

Suitable for reducing noise at the exhaust ports of pneumatic systems.

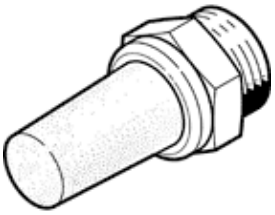

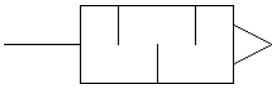

Data sheet

Feature	Value
Assembly position	Any
Container size	20
Operating pressure	0 ... 10 bar
Flow rate to atmosphere	1,735 l/min
Operating medium	Compressed air in accordance with ISO8573-1:2010 [7:-:-]
Note on operating and pilot medium	Lubricated operation possible
Corrosion resistance classification CRC	1 - Low corrosion stress
Sound pressure level	76 dB(A)
Ambient temperature	-40 ... 80 °C
Product weight	7.5 g
Pneumatic connection	G1/8
Material of silencer insert	Bronze
Material of threaded plug	Brass
Materials note	Conforms to RoHS

push-in fitting
NPQM-D-G18-Q6-P10

Part number: 558662

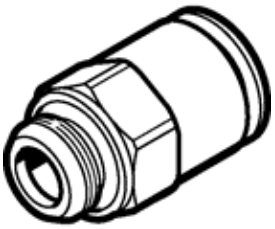

Data sheet

Feature	Value
Size	Standard
Nominal size	4 mm
Type of seal on screw-in stud	Sealing ring
Design structure	Push/pull principle
Operating pressure complete temperature range	-0.95 ... 16 bar
Operating medium	Compressed air in accordance with ISO8573-1:2010 [7:-:-]
Note on operating and pilot medium	Lubricated operation possible
Corrosion resistance classification CRC	1 - Low corrosion stress
Ambient temperature	-20 ... 70 °C
Nominal tightening torque	6 Nm
Tolerance for nominal tightening torque	± 20 %
Product weight	9 g
Pneumatic connection, port 1	G1/8
Pneumatic connection, port 2	For tubing outside diameter 6 mm
Materials note	Conforms to RoHS
Material housing	Nickel-plated brass
Material of tubing seal	NBR

push-in L-fitting
NPQM-L-G18-Q6-P10

Part number: 558709

FESTO

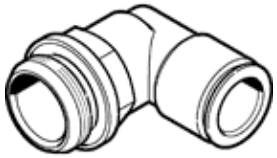

Data sheet

Feature	Value
Size	Standard
Nominal size	5 mm
Type of seal on screw-in stud	Sealing ring
Design structure	Push/pull principle
Operating pressure complete temperature range	-0.95 ... 16 bar
Operating medium	Compressed air in accordance with ISO8573-1:2010 [7:-:-]
Note on operating and pilot medium	Lubricated operation possible
Corrosion resistance classification CRC	1 - Low corrosion stress
Ambient temperature	-20 ... 70 °C
Nominal tightening torque	6 Nm
Tolerance for nominal tightening torque	± 20 %
Product weight	18.5 g
Pneumatic connection, port 1	G1/8
Pneumatic connection, port 2	For tubing outside diameter 6 mm
Materials note	Conforms to RoHS
Material housing	Nickel-plated brass
Material of tubing seal	NBR

Threaded Stock Stainless Steel Static Mixers

Threaded Stainless Steel Static Mixer

Stock Static Mixers

Koflo carries a complete line of threaded stainless steel static mixers, in stock for immediate delivery. Stainless steel static mixers in sizes 1/4"- 2" are constructed of 316 / 316L stainless steel with either 6 or 12 mixing elements. All mixers are precision-welded into a schedule 40 housing and come complete with male NPT threaded ends.

REQUEST A QUOTE (request-a-quote/stock-products-rfq.html)

Typical Applications

- Polymer dilution
- Chemical blending
- Water Treatment
- pH Adjustment

Static mixers are versatile mixing devices that can be used in a wide range of industries and applications beyond those listed above. For questions regarding your specific application, feel free to Contact Us (contact-us.html).

Features

Housing: Schedule 40 316/316L Stainless Steel
Elements: Koflo Blade™ Style 316/316L Stainless Steel
End Connections: Machined Male NPT (Threaded Ends)

- Industrial grade materials and craftsmanship ensure long service life and durability under demanding conditions.

Custom Stainless / Alloy

Koflo offers custom-designed stainless steel/metal alloy mixers with a number of available options to suit your application. Click below for Custom Stainless Steel/Metal alloy options and information.

Stainless Steel / Metal Alloy
Custom Static Mixers
(static-mixers/custom-static-mixers/custom-stainless-steel-metal-alloy-static-mixers/)
(static-mixers/custom-static-mixers/custom-stainless-steel-metal-alloy-static-mixers/)

Technical Specifications

Model Number	Pipe Dia. MNPT Ends	Number of Elements	Length	Weight (lb)
1/4-40-3-6-2	1/4"	6	3"	0.15
1/4-40-3-12-2	1/4"	12	6"	0.30
3/8-40-3-6-2	3/8"	6	4"	0.20
3/8-40-3-12-2	3/8"	12	8"	0.40
1/2-40-3-6-2	1/2"	6	5"	0.35
1/2-40-3-12-2	1/2"	12	10"	0.75
3/4-40-3-6-2	3/4"	6	7"	0.70
3/4-40-3-12-2	3/4"	12	13"	1.33
1-40-3-6-2	1"	6	9"	1.25
1-40-3-12-2	1"	12	17"	2.45
1.5-40-3-6-2	1.5"	6	13"	3.20
1.5-40-3-12-2	1.5"	12	26"	6.10
2-40-3-6-2	2"	6	17"	5.55
2-40-3-12-2	2"	12	33"	10.85

TECHNICAL DOWNLOADS

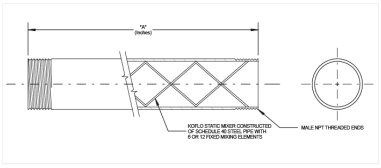

(drawings/pdf/kd-962.pdf)

Stock Stainless Steel Threaded Mixers PDF DRAWING (drawings/pdf/kd-962.pdf)

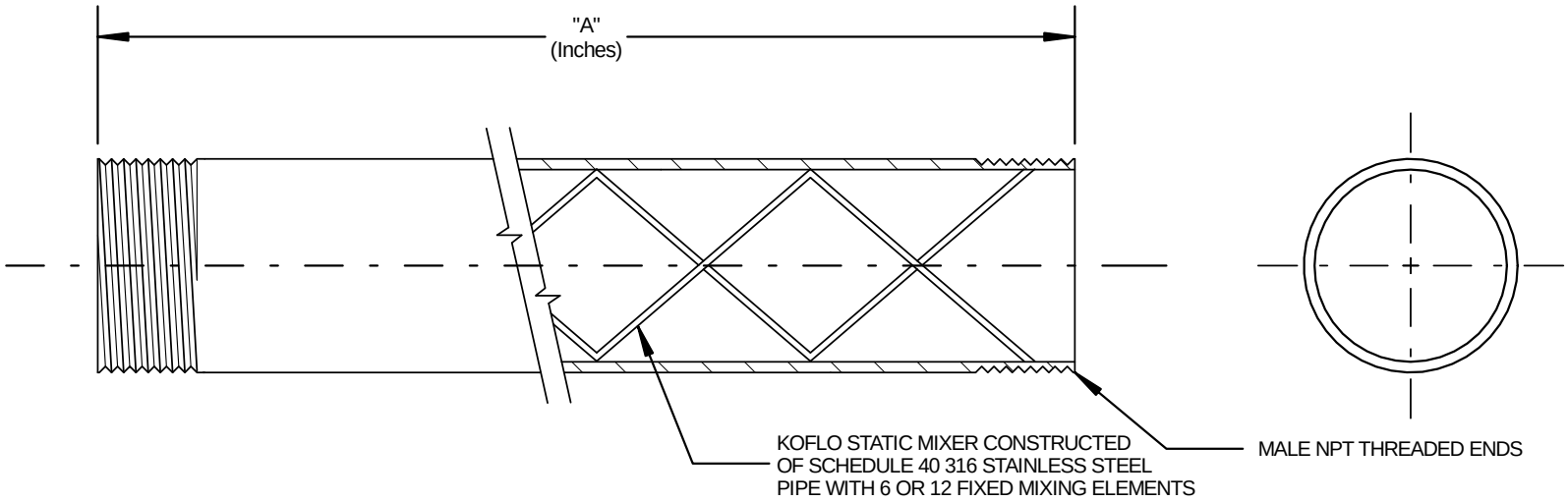

Size	6 Element Model Number	"A" 6 Element	12 Element Model Number	"A" 12 Element
1/4"	1/4-40-3-6-2	3	1/4-40-3-12-2	6
3/8"	3/8-40-3-6-2	4	3/8-40-3-12-2	8
1/2"	1/2-40-3-6-2	5	1/2-40-3-12-2	10
3/4"	3/4-40-3-6-2	7	3/4-40-3-12-2	13
1"	1-40-3-6-2	9	1-40-3-12-2	17
1-1/2"	1.5-40-3-6-2	13	1.5-40-3-12-2	26
2"	2-40-3-6-2	17	2-40-3-12-2	33

Koflo Corporation
309 CARY POINT DR.
CARY, IL 60013

SCALE: NONE	APPROVED BY JLT	DRAWN BY NJF
DATE: 1/6/15		REVISED
CUSTOMER:		REVISED
		REVISED
MODEL NO: STOCK 316 SS SCHEDULE 40 THREADED STEEL MIXER		DRAWING NUMBER: KD-962

For Residential, Commercial and OEM Applications

Job Name _____ Contractor _____

Job Location _____ Approval _____

Engineer _____ Contractor's P.O. No. _____

Approval _____ Representative _____

LEAD FREE*

Series SS263AP

Compact Stainless Steel Water Regulators

Sizes: 1/4" - 1/2" (8-15mm)

Series SS263AP Compact Stainless Steel Water Regulators are designed for use with deionized water, chemical solutions, and high purity water purification systems applications. Lead Free small pressure regulators shall comply with state codes and standards where applicable, requiring reduced lead content.

Features

- Rugged investment cast stainless steel body and cage
- Stainless steel adjusting screw
- Oversized orifice
- 1/4" (8mm) gauge port

Materials

Body:	Stainless steel ASTM-351-CF8M
Spring Cage:	Stainless steel ASTM-351-CF8M
Disc:	Buna-N (FDA) stainless steel stem
Diaphragm:	Reinforced Buna-N (FDA)
Bottom Plug:	Stainless steel
Bottom Spring:	Stainless steel
Trim:	Viton®*

*Viton® is a registered trademark of DuPont Dow Elastomers.

Options

Add suffix:

G	pressure gauge
X	slotted adjusting screw

See Pressure -Temperature section for reduced pressure range options

Specifications

A compact lead free* water regulator shall be installed on deionized water purification or chemical handling systems as indicated on the plans. Regulator shall have a stainless steel body and cage and oversized orifice. Regulator shall be a Watts Series SS263AP.

SS263AP
3-Way

Pressure – Temperature

Temperature Range: 0ºF–140ºF (18ºC – 60ºC)

Maximum Operating Pressure: 400psi (27.6 bar)

Reduced Pressure Range:

OPTION SUFFIX	RANGE		STD SET AT	
	psi	*bar*	*psi*	*bar*
A	1-25	0.1-1.8	10	0.7
B	3-50	0.2-3.5	15	1.0
C	10-125	0.7-8.8	25	1.8
D	20-175	1.38-12.07	50	3.5
E	100-300	7.0-21.0	125	8.8

NOTICE

The information contained herein is not intended to replace the full product installation and safety information available or the experience of a trained product installer. You are required to thoroughly read all installation instructions and product safety information before beginning the installation of this product.

NOTICE

Inquire with governing authorities for local installation requirements

***The wetted surface of this product contacted by consumable water contains less than 0.25% of lead by weight.**

Watts product specifications in U.S. customary units and metric are approximate and are provided for reference only. For precise measurements, please contact Watts Technical Service. Watts reserves the right to change or modify product design, construction, specifications, or materials without prior notice and without incurring any obligation to make such changes and modifications on Watts products previously or subsequently sold.

WATTS®

Capacity

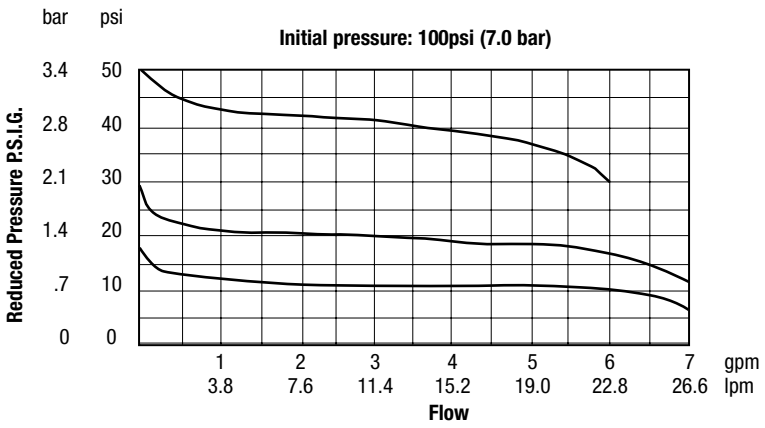

Notice: 1psi equals .07 bar
1gpm equals 3.785 liters per minute

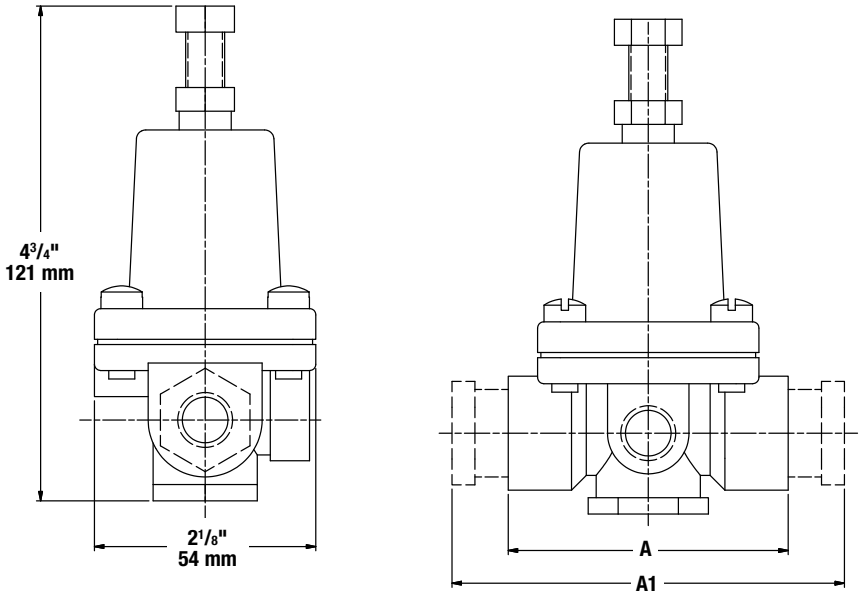

Dimensions - Weights

SIZE (DN)		DIMENSIONS				WEIGHT	
		A		A1			
in.	*mm*	*in.*	*mm*	*in.*	*mm*	*lbs*	*kg*
¼	8	NA	—	3¾	95	1.8	.82
⅜	10	NA	—	3¾	95	1.8	.82
½	15	2 11/16	68	NA	—	1.5	.68

Notice: ¼" and ⅜" valves are supplied with 2 reducing bushings to ½" NPT connection.

USA: T: (978) 689-6066 • F: (978) 975-8350 • Watts.com
Canada: T: (905) 332-4090 • F: (905) 332-7068 • Watts.ca
Latin America: T: (52) 81-1001-8600 • Watts.com

© 2017 Watts

McMASTER-CARR®

Medium-Pressure Stainless Steel Y-Strainer

with Mesh and Perforated Screen, 1/2 NPT

$178.49 Each
4745K53

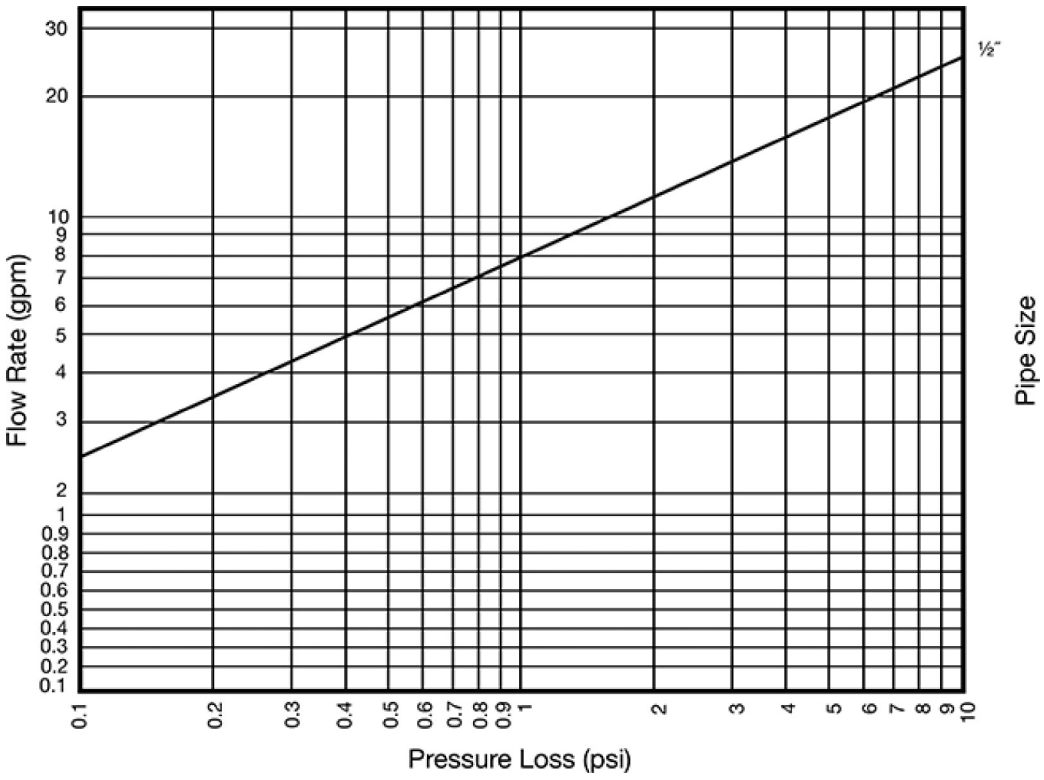

For Use With	Diesel Fuel, Inert Gas, Natural Gas, Oil, Steam, Water
For Reducing	Particles
Strainer Type	Y
Connection Type	Pipe
Pipe Connection Type	Threaded
Pipe Size	1/2
Thread Type	NPT
Gender	Female
Maximum Pressure	1,400 psi @ 70° F
Maximum Steam Pressure	600 psi @ 1125° F
Temperature Range	35° to 1125° F
Length	3 7/8"
Height	3 1/2"
Plug Pipe Size	1/2
Material	316 Stainless Steel
Screen Material	304 Stainless Steel
Screen Construction	Mesh, Perforated
Screen Top OD	7/8"
Screen Bottom OD	1 1/8"
Screen Length	2 3/8"
Features	Threaded Drain with Plug
Screen Mesh Size	20
RoHS	RoHS 3 (2015/863/EU) Compliant
REACH	REACH (EC 1907/2006)

	(01/19/2021, 211 SVHC) Compliant
DFARS	Specialty Metals COTS-Exempt
Country of Origin	United States
USMCA Qualifying	No
Schedule B	842129.0065
ECCN	2B999
Related Product	Replacement Screens

316 stainless steel gives these strainers excellent corrosion resistance. Use them in medium-pressure applications to capture debris in your pipeline and protect sensitive equipment. Strainers have a threaded drain with a plug that provides access to the screen without disconnecting your line.

Screen Mesh Size: 20

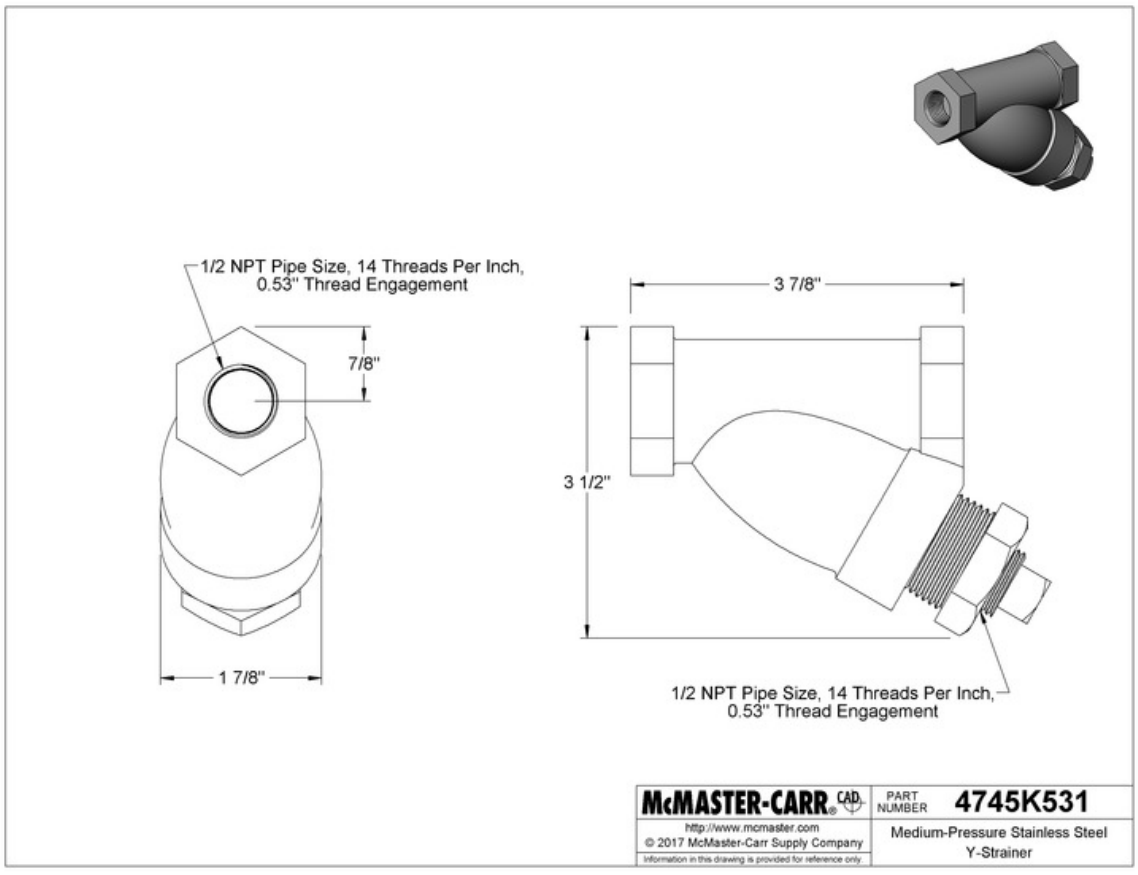

The information in this 3-D model is provided for reference only.

McMASTER-CARR®

Single Scale Pressure Gauge with 304 Stainless Steel Case

1/4 NPT Male Bottom Connection, 4" Dial

$35.71 Each
4003K61

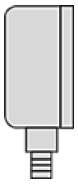

Bottom Connection

Measures	Pressure
For Use With	Air, Ethyl Alcohol, Hydraulic Fluid, Natural Gas, Nitrogen, Water
Display Type	Dial
Dial Type	Dry
For Pressure Ranges	0-15 to 0-6,000 psi
Dial Diameter	4"
Pipe Size	1/4
Scale Type	Single
Scale	psi
Environment Temperature Range	-40° to 150° F
Process Temperature Range	-40° to 150° F
Connection Type	Pipe
Pipe Connection Type	Threaded
Thread Type	NPT
Gender	Male
Case Material	304 Stainless Steel
Connection Material	Brass
Lens Material	Polycarbonate Plastic
Accuracy	±2%
Accuracy Scale	Mid Scale
Accuracy Grade	B
Connection Location	Bottom
Graduation Marks	2 psi
Numeric Increments	20 psi
Pressure Range	0 to 100 psi

These are the most commonly used pressure gauges. Use them with pumps, filters, regulators, and in process lines to measure and display pressure.

Gauges with 304 stainless steel case or ABS plastic case have better corrosion resistance than gauges with brass or steel case.

Pressure Range, psi: 0 to 100

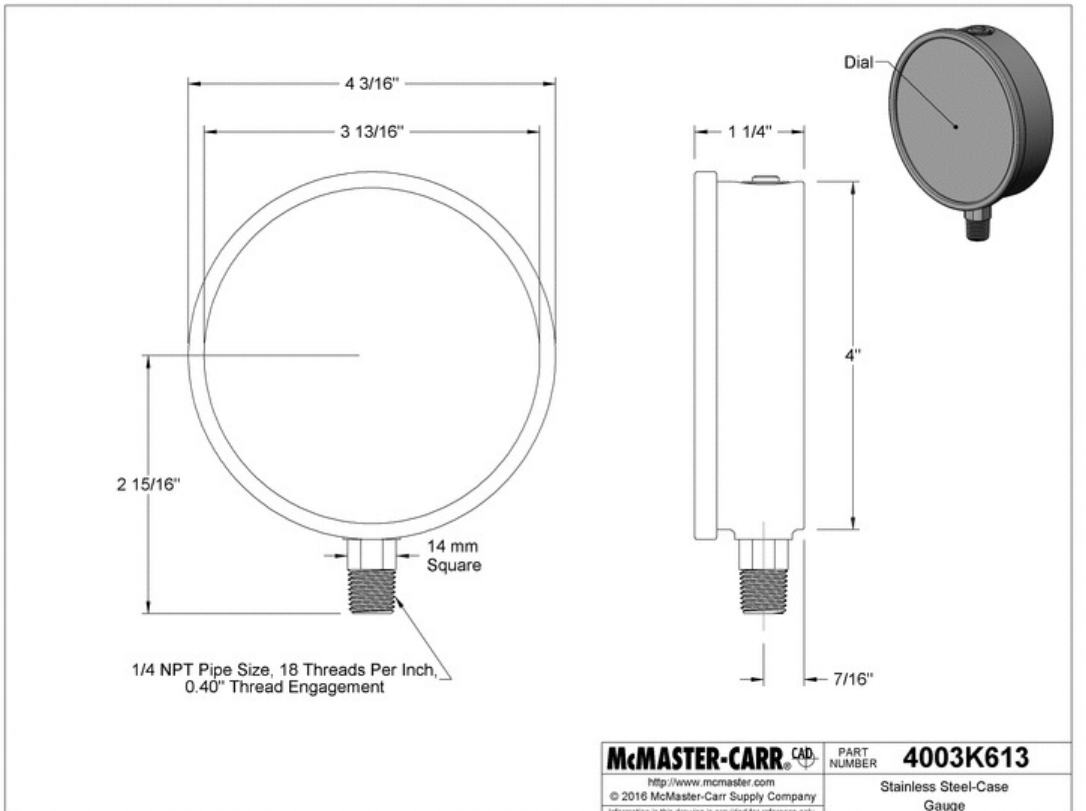

The information in this 3-D model is provided for reference only.

Technical DataSheets

Description :
AIR CONDITIONER 4000 BTU 115VAC
INDOOR

Trade Name :
Hoffman

Model no :
N280416G050

N280446G050

SPECTRACOOL™ NARROW INDOOR/OUTDOOR

N43
11000 BTU/Hr.
3223 Watt

N36
6000/8000 BTU/Hr.
1758/2344 Watt

N28
4000 BTU/Hr.
1172 Watt

INDUSTRY STANDARDS

UL/cUL Listed; Type 12, 3R, 4; 4X optional; File No. SA6453

CE
IP 56 Internal Loop
IP 34 on External Loop
Telcordia GR-487 capable (Outdoor)

APPLICATION

- Industrial automation
- Waste water treatment systems
- Package handling equipment
- Security and defense systems

FEATURES

- Narrow design accommodates 12-in. (300-mm) deep cabinets
- Energy efficient reciprocating compressor on N28 models
- Energy efficient rotary compressor on N36 and N43 models
- R407c and R134a earth-friendly refrigerants
- Models for 115, 230 and 400/460 3-phase VAC power input
- UL Listed to save customers time and money with agency approvals
- Outdoor model operating temperature range from -40 F/-40 C to 131 F/55 C (125 F/52 C on N28 Series)
- Attractive industrial design with minimal use of visible fasteners
- Reliable mechanical thermostat on enclosure side of the unit; indoor Air Conditioner models include digital display on ambient side
- Galvanized sheet-metal cover for rugged factory and outdoor environments
- Easy-mount flanges for simple installation
- Cut-out adapter options for enclosures with GENESIS® air conditioners enable users to easily transition to the new unit
- Dust-resistant condenser coil allows the unit to be run filterless in most applications
- Cleanable, reusable aluminum mesh filter protects coils for maximum cooling performance
- Mounting hardware, gaskets and user manual furnished with the unit
- Every unit functionally tested before shipping
- Standard Indoor Air Conditioner models also include:
  - Active condensate management with heater strip
  - Power-off relay for door switch and other system requirements
  - Malfunction switch
- Standard Outdoor Air Conditioner models also include:
  - Telcordia GR-487 capable
  - Corrosion-resistant components
  - Malfunction switch
  - Compressor heater
  - Head pressure control
  - 1300 W enclosure heater

SPECIFICATIONS

- Nominal cooling capacity:
  N28 4000 BTU/Hr. (1172 W)
  N36 6000 & 8000 BTU/Hr. (1758 and 2344 W)
  N43 11000 BTU/Hr. (3223 W)
- Outdoor model operating temperature range from -40 F/-40 C to 131 F/55 C (125 F/52 C on N28 Series)

FINISH

- RAL 7035 light-gray, semi-textured powder-coat paint
- Other colors and textures available

NOTES

Visit www.PentairProtect.com to download 2D and 3D CAD drawings into the overall design of your electronic system.

Performance Data **N28 4000 BTU/Hr. (1172 Watt)**

CATALOG NUMBER			
Indoor Model	N280416G050	N280426G050	N280446G050
Indoor Model Stainless Steel Type 4X	N280416G051	N280426G051	N280446G051
Indoor Model with Remote Access Control*	N280416G060	N280426G060	N280446G060
Outdoor Model without Heat Pkg.	N280416G100	N280426G100	N280446G100
Outdoor Model without Heat Pkg. Stainless Steel Type 4X	N280416G102	N280426G102	N280446G102
Outdoor Model with Heat Pkg.	N280416G150	N280426G150	—
Outdoor Model with Heat Pkg. Stainless Steel Type 4X	N280416G151	N280426G151	—
COOLING PERFORMANCE			
Nominal:			
BTUs/Hr.	**3800 / 4000**	**3800 / 4000**	**4000**
Watts	**1114 / 1172**	**1114 / 1172**	**1172**
At 125 F / 125 F (50 C / 50 C):			
BTU/Hr. (50 / 60 Hz)	3940 / 4104	4269 / 4703	4703
Watts (50 / 60 Hz)	1150 / 1000	1250 / 1378	1378
At 95 F / 95 F (35 C / 35 C):			
BTU/Hr. (50 /60 Hz)	3754 / 4011	3700 / 4291	4291
Watts (50 / 60 Hz)	1100 / 1175	1086 / 1257	1257
Refrigerant	R134a	R134a	R134a
Refrigerant Charge (ounces/grams)	10 / 283	11 / 312	11 / 312
Operating Temperature Range:			
Maximum (°F / °C)	125/52	125/52	125/52
Minimum (°F / °C)	-40/-40	-40/-40	-40/-40
Air Flow at 0 Static Pressure:			
Internal loop 50 Hz (CFM / M^3/Hr)	138 / 234	N/A	N/A
External loop 50 Hz (CFM / M^3/Hr)	268 / 455	N/A	N/A
Internal loop 60 Hz (CFM / M^3/Hr)	143 / 362	143 / 243	143 / 243
External loop 60 Hz (CFM / M^3/Hr)	288 / 728	288 / 489	288 / 489
Max. Heater W (Outdoor Models)	1300	1300	1300
ELECTRICAL DATA			
Rated Voltage	**110 / 115**	**230**	**460**
Frequency (Hz)	50 / 60	50 / 60	60
Operating Range	+/-10%	+/-10%	+/-10%
Max. Power Consumption (Watts at 50 / 60 Hz)	971 / 1116	975 / 1104	1104
Max. Nominal Current (Amps at 50 / 60 Hz)	10.6 / 10.0	4.9 / 5.0	2.5
Starting Current (Amps)	40	24.5	12.5
Agency Approvals		cUL Listed CE Others available upon request	
Power Input Description		Terminal Block	
ENCLOSURE PROTECTION			
UL Type		Type 12, 3R, 4 Standard Type 4X Stainless Steel Optional	
CONTROLLER			
Description		Basic Mechanical Thermostat	
Thermostat Location		Enclosure Side	
Factory Thermostat Setting (°F / °C)		80 / 27	
SOUND LEVEL			
At 1.5 Meters	64.4 dBA	65.5 dBA	65.5 dBA
UNIT CONSTRUCTION			
Material		Galvanized sheet metal standard Stainless steel optional	
Finish		RAL 7035 light-gray, semi-textured powder-coat paint standard Other colors available	
ACCESSORIES			
EASYSWAP Adaptor Plenum (GENESIS™ M33)		Enables SPECTRACOOL to be mounted to a GENESIS M33 air conditioner cutout Catalog Number PLM33N28	
UNIT DIMENSIONS			
Height (in / mm)		28 / 711.2	
Width (in / mm)		11.50 / 292.1	
Depth (in / mm)		14.00 / 355.6	
Weight (lb / kg)	84/38	84/38	92/41.7

*Units with Remote Access Control utilize a digital controller and communicate via EtherNet/IP, Modbus TCP/IP and SNMP over ethernet or modbus RTU over USB.

Performance Curves for N28 Models 4000 BTU/Hr. (1172 Watt)

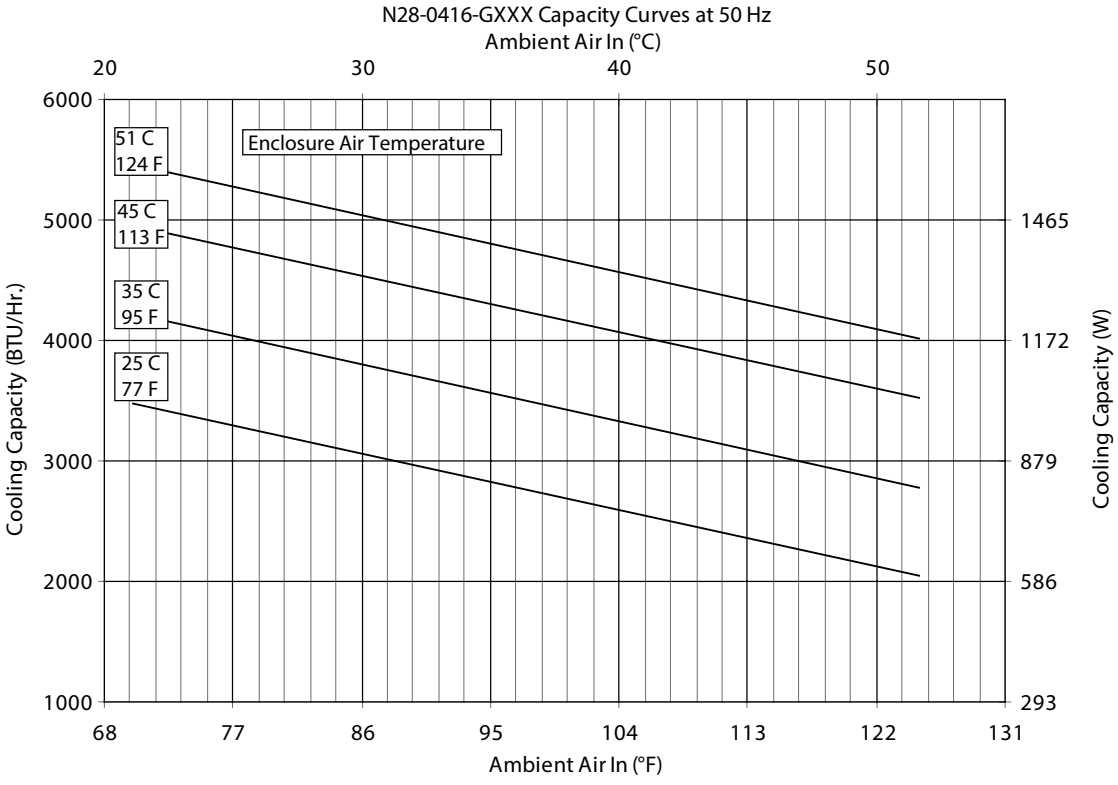

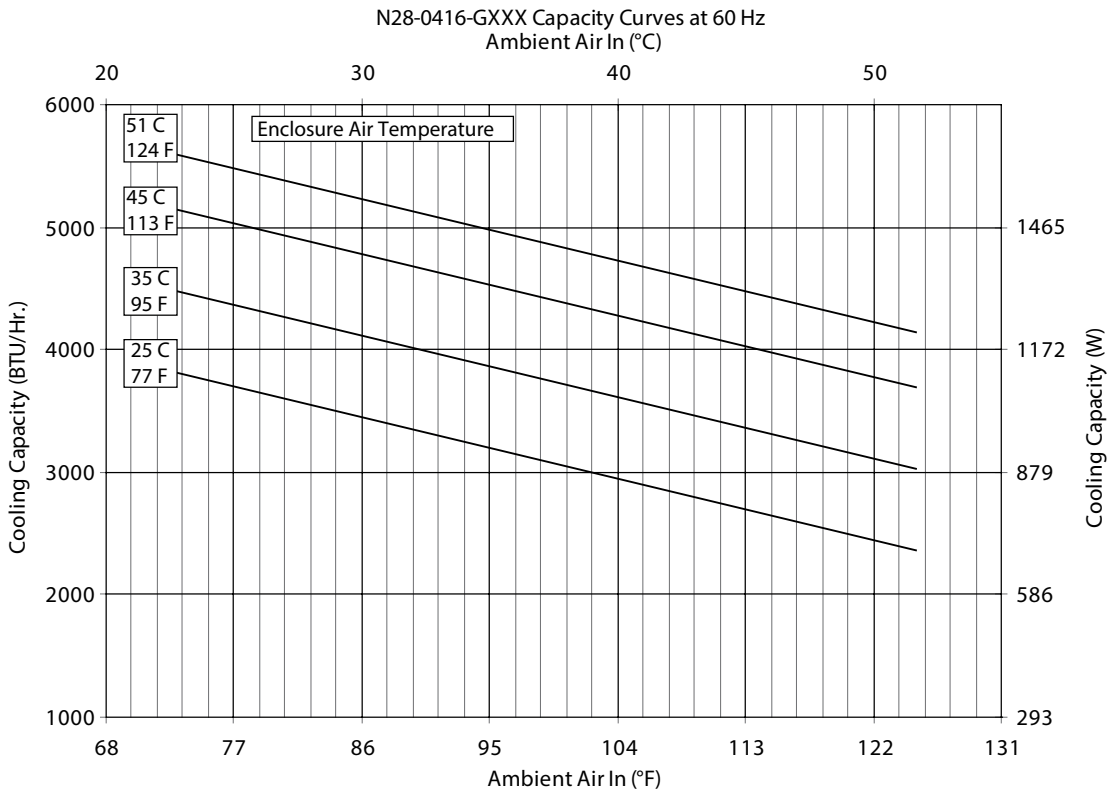

Performance Curves for N28 Models 4000 BTU/Hr. (1172 Watt)

N28-0426-GXXX Capacity Curves at 50 Hz

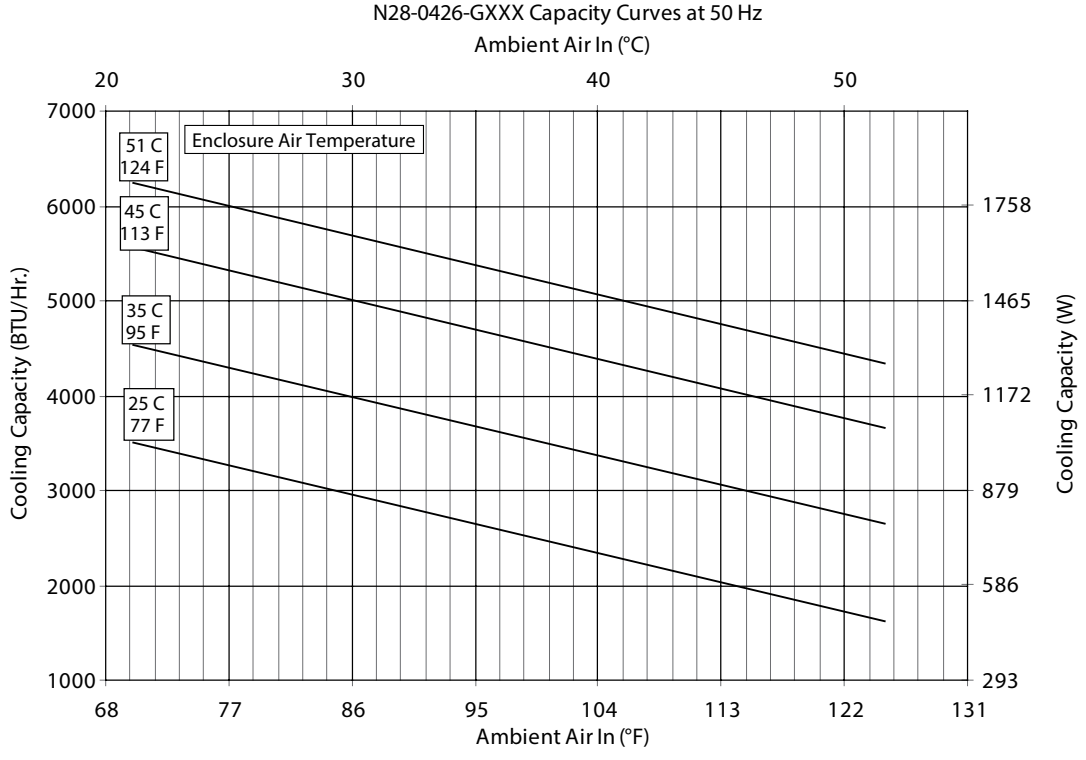

N28-0426-GXXX Capacity Curves at 60 Hz

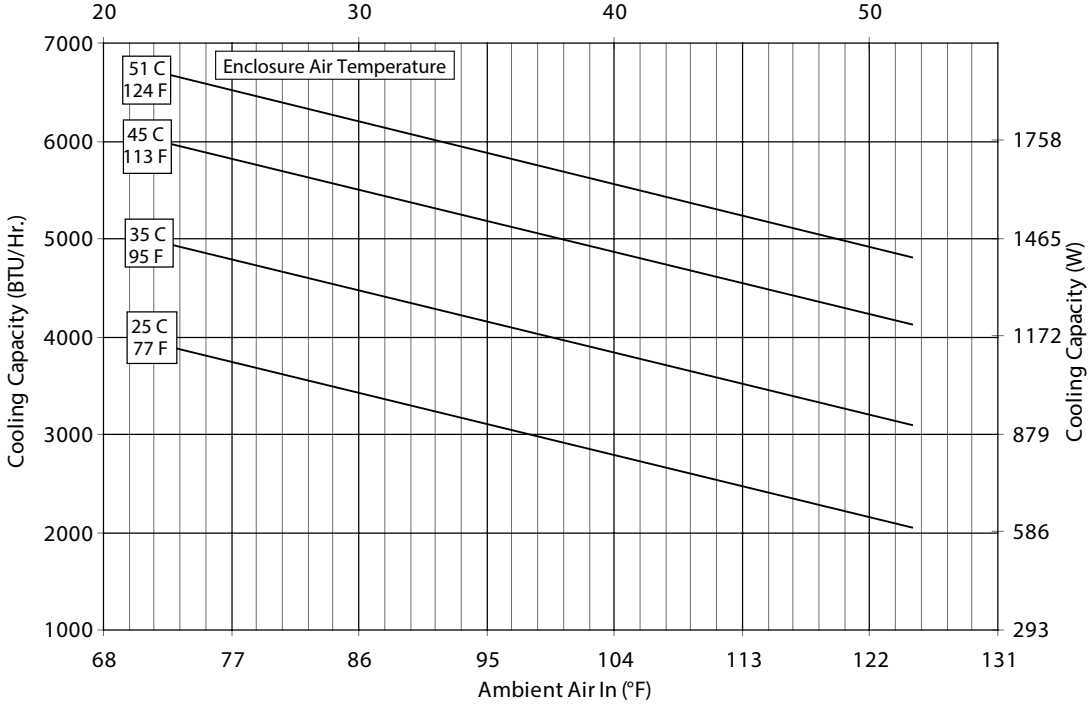

N28 Models 4000 BTU/Hr. (1172 Watt)

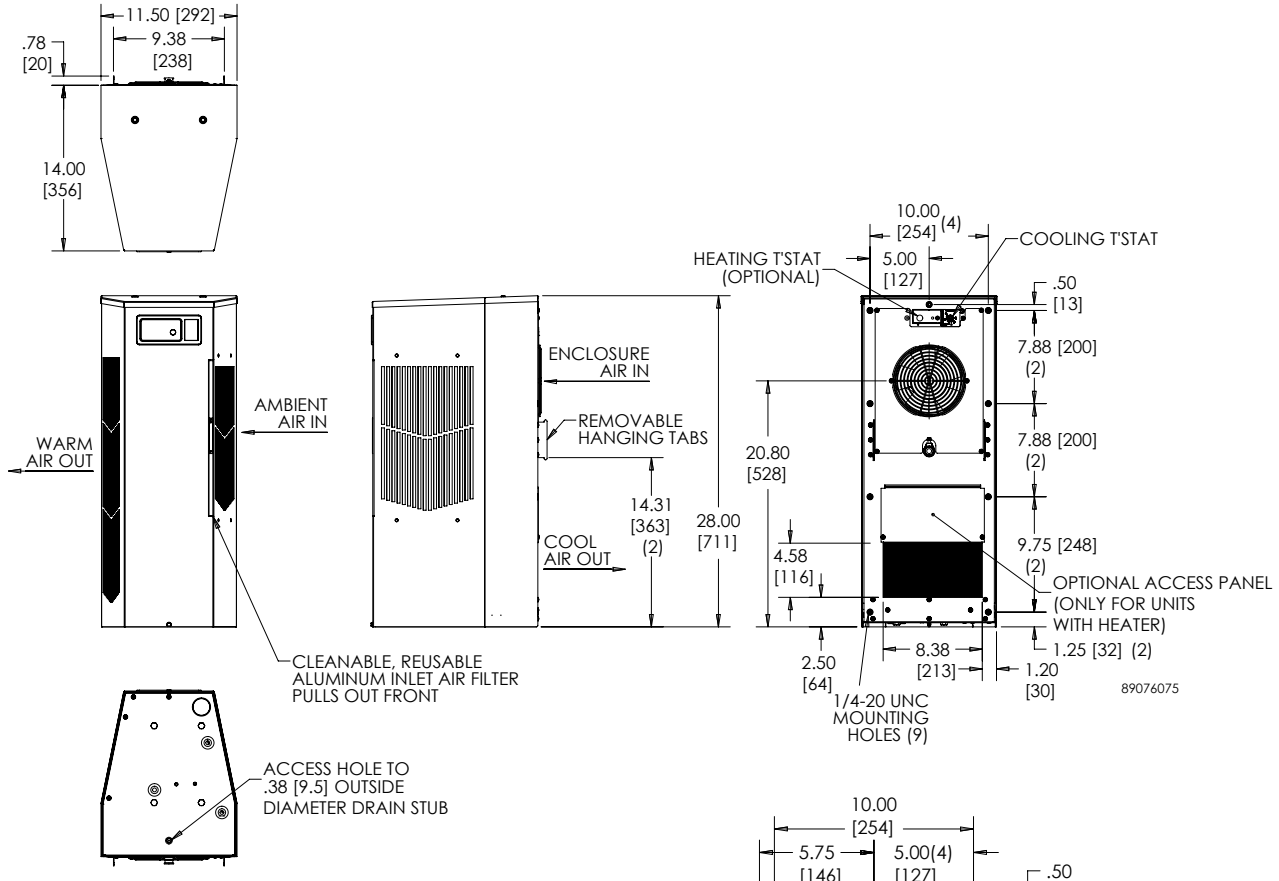

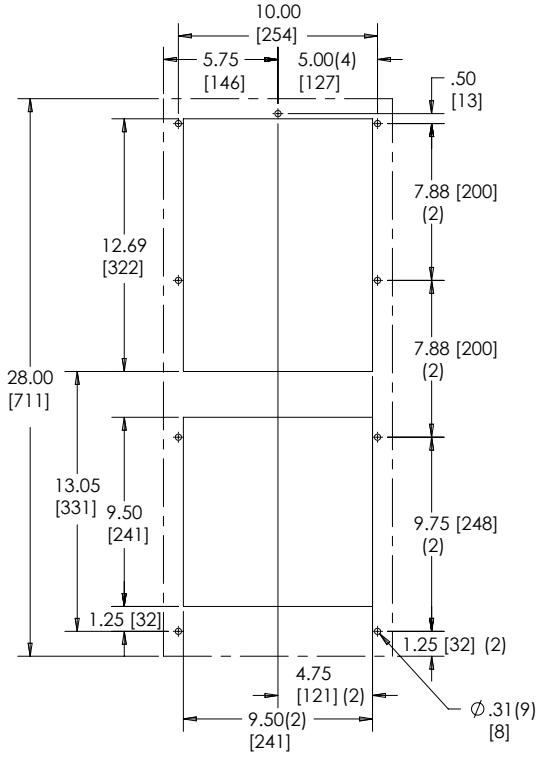

Cutout Dimensions

Visit www.PentairProtect.com to download 2D and 3D CAD drawings into the overall design of your electronic system.

Description :
GEARMOTOR 1 HP, 575V, M4, 361 RPM
OIL SIGHT GLASS, MAGNETIC DRAIN PLUG
PREMIUM EFFICIENCY

Trade Name :
Nord Gear

Model no :
SK0282.1 AXFBH-80LP/4 M4 575V 361 RPM

Intelligent Drivesystems, Worldwide Services

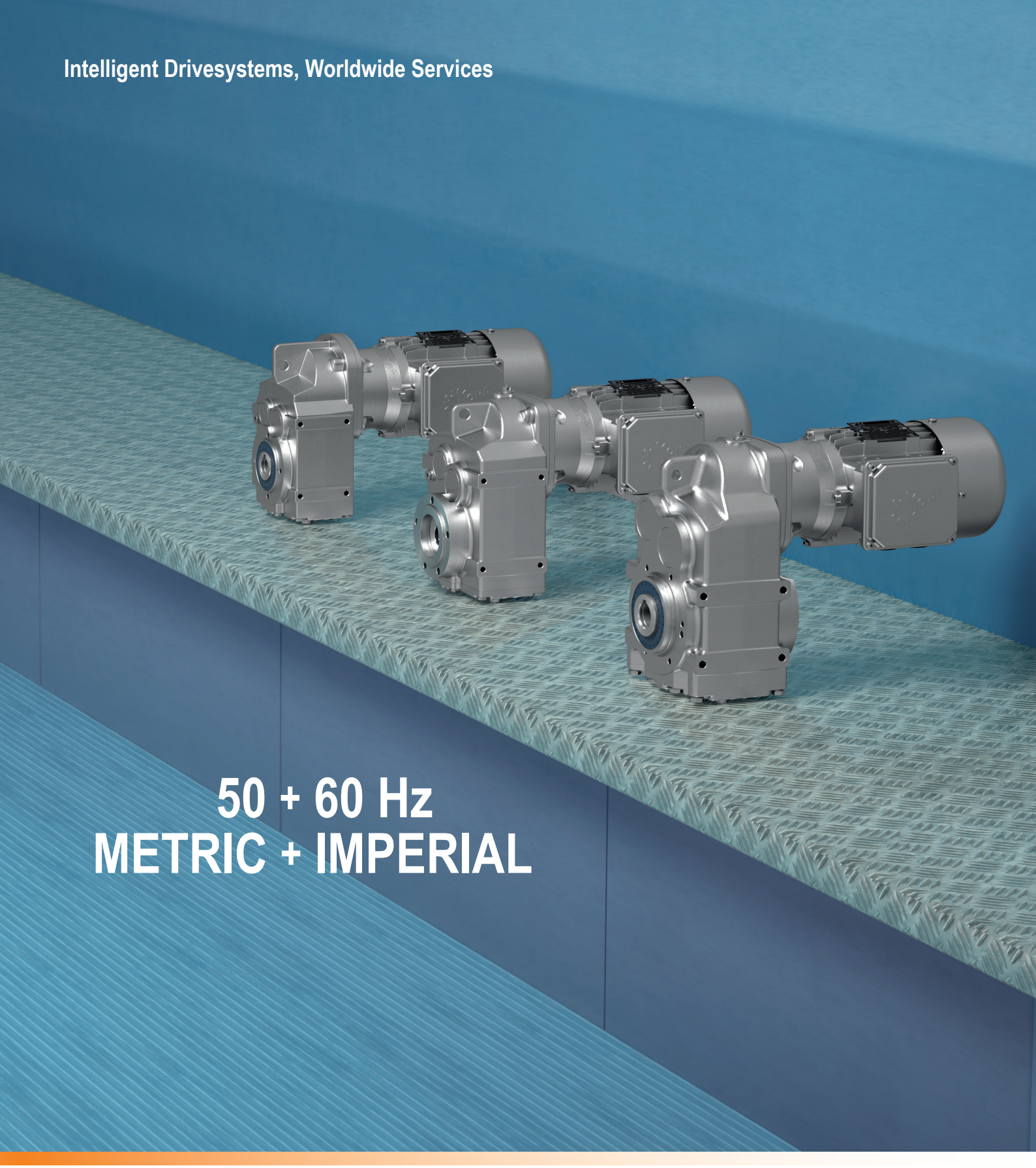

50 + 60 Hz
METRIC + IMPERIAL

EN-US

PRODUCT INFORMATION

Parallel shaft gear units

IE3

TI60-0009

NORD®
DRIVESYSTEMS

NORD GEAR LIMITED

Member of the NORD DRIVESYSTEMS Group

NORD Gear Limited / 41 West Drive / Brampton ON L6T 4A1

Les Industries Fournier Inc
3787 Frontenac Ouest
Thetford Mines Québec G6H 2B5

Technical Data Sheet

Number | Date	0202855976-100.0 | 07/05/2020
Reference no.	237636
Created by	Joel Beauseigle
Phone	+1-418-930-3204
Email	joel.beauseigle@nord.com
Customer Account No.	850009792
Phone	+1-905-796-3606
Contact	Joel Beauseigle
Phone	+1-418-930-3204
Email	joel.beauseigle@nord.com
Website	www.nord.com

Description	Material
SK0282.1AXFBH-80LP/4 CUS TW	
Your MatNo.:	
Product Name	Shaft Mount Gearmotor
Motor Type	CUS
Motor Speed	1730 1/min
Motor Speed (2)	1730 rpm
Ratio	4.79
Output Speed	361.000 rpm
Service Factor	8.10
Nominal Output Torque (lb-in)	175.00
Max. Torque Capacity (lb-in)	1416.00
Motor Power (KW)	0.750
Motor Power (HP)	1.000
Voltage (V)	575
Frequency (Hz)	60
Efficiency Class	Premium EFF acc. to EISAct
Duty Cycle	S1
Motor Enclosure Type	IP55
Insulation Class	F
Environmental temp. motor	40°C
Rated Current Low Volt (A)	3.14
Rated Current High Volt (A)	1.57
Power Factor 1	0.70
Gearbox Mounting Position	M4
Housing Type	Hollow Shaft/Footed/B5 Flange
Housing Material	Aluminum
Output Shaft Dimensions	1.000"
Flange Diameter (in)	6,3
Flange Material	Aluminium
Breather	Non vented gearbox
Output Shaft Cover	Hollow Shaft Cover

Description	Material
Oil Exp. Chamber/Oil Tank	.Oil Expansion Chamber
Fixing Element	Fixing Element Kit
Motor Temperature Protection	Thermostat
Motor Connection	Star; High Voltage
Terminal Box Position	1/I
Lubricant Type	VG220-SYN-PAO-EP
Lubricant Supplier	Mobil
Lubricant	SHC Gear 220
Quantity Lubricant(l)	1.330
Qty. lubricant (Qts)	1.410
Paint Option Old	Without paint
CE Logo	Yes
CCC Logo	No
Separate part	Fixing element
Separate part (2)	Oil Expansion Chamber
Separate part (3)	Cover
Conduit Hole Connection	18524250 M25x1.5/3/4" NPT

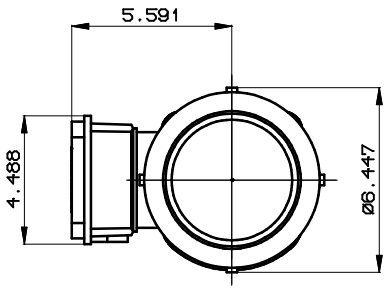

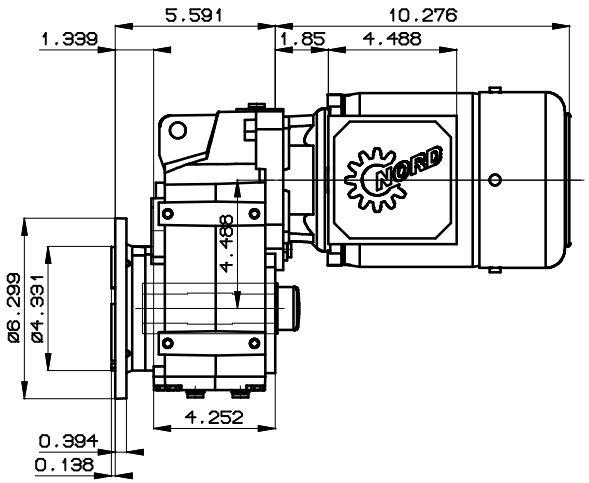

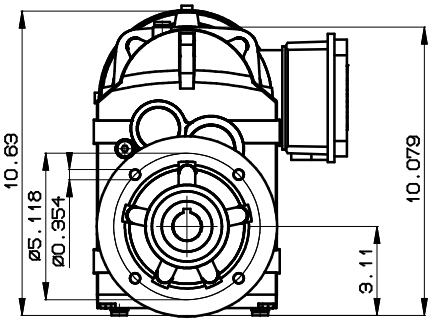

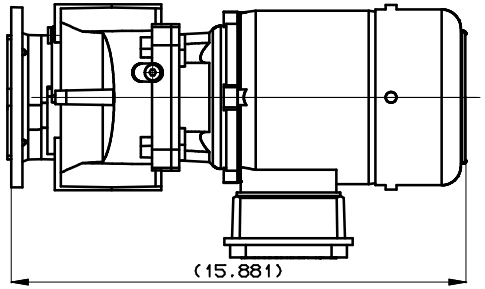

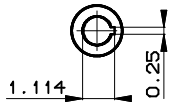

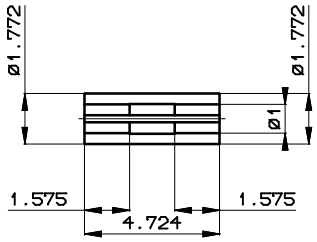

SK 0282.1AXFB – 80 LP TF

NORD

Nord Internet: http://www.nord.com

DRIVESYSTEMS

	Date	Name
Drawn	2020-05-08	Beauseigle

Technical changes reserved!
This drawing is created with NORDCAD 9.2.0 s

CLINCHER™ Ordering Guide

NORD DRIVESYSTEMS

	Gear Unit	Shaft/Mounting	Reducer Options	Motor/Input	Motor Options
SK	❶ 0282NB	❷ AXF	❸BHOSGMDP	- ❹ 80LP/4	
				see page 85	see page 300

❶

Gear Unit			
0182NB	2382	1282/02	6382/22
0282NB	3382	2282/02	6382/32
1282	4382	3282/12	7382/22
1382NB	5382	4282/12	7382/32
2282	6382	5282/12	8382/22
3282	7382		8382/32
4282	8382		9382/42
5282	9382		9382/52
6282	10382.1		
7282	11382.1		
8282			
9282			

❷

Shaft/Mounting		
VZ - Solid Shaft/B14 Flange	**VX -** Solid Shaft/Foot	**AZ** - Hollow Shaft/B14 Flange
VF - Solid Shaft/B5 Flange	**LX -** Double Solid Shaft/Foot	**AF** - Hollow Shaft/B5 Flange
SCP - Screw Conveyor Package		**AX** - Hollow Shaft/Foot

❸

Reducer Options		
❒ **B -** Fixing Kit	❒ **LL -** Long Term Storage	❒ Cross Drilled Shaft
❒ **G -** Rubber Buffers	❒ **VL -** Heavy Duty Output Bearings	❒ **FKM -** Fluoro-rubber Seals
❒ **VG -** Heavy Duty Rubber Buffers	❒ **VL2 -** Spread Bearing Design	❒ **OSG -** Oil Sight Glass
❒ **H -** Hollow Shaft Cover	❒ **VL3 -** Oil Safe Spread Bearing Design	❒ **OA -** Oil Expansion Chamber
❒ **H66 -** IP66 Hollow Shaft Cover	❒ **VL4-** Drywell Drop Bearing Design	❒ **OC -** Oil Cooler
❒ **SH -** Shrink Disc & Cover	❒ **LX-** Double Solid Shaft	❒ **WC -** Water Cooling Cover
❒ **VSH -** Heavy Duty Shrink Disc & Cover	❒ **SM5 -** Stainless Steel Output Shaft	❒ **OT -** Oil Reservoir Tank
❒ **M -** GRIPMAXX™	❒ **SWA -** Special Hollow Shaft	❒ **MDP -** Magnetic Drain Plug
❒ **PR -** Flange Pilot Removal	❒ **SWV -** Special Solid Shaft	❒ **ADP -** Additional Drain Plug

❹

Input Shaft	NEMA Adapter	IEC	Integral 60 Min. Duty Motors		Integral Premium Efficent Motors		Scoop	Motor Platform	Servo Adapter (Keyed)
W	N56C	IEC 63	63S/4 - 0.16hp	100LA/4 - 5hp	80LP/4 - 1hp	225RP/4 - 40hp	S56	MKN056	SEP 100
	N140TC	IEC 71	63L/4 - 0.25hp	112M/4 - 5.4hp	90SP/4 - 1.5hp	225SP/4 - 50hp	S140T	MKN140	SEP 130
	N180TC	IEC 80	71S/4 - 0.33hp	132S/4 - 7.5hp	90LP/4 - 2hp	225MP/4 - 60hp	S180T	MKN180	SEP 165
	N210TC	IEC 90	71L/4 - 0.50hp	132M/4 - 10hp	100LP/4 - 3hp	250WP/4 - 75hp	S210T	MKN210	SEP 215
	N250TC	IEC 100	80S/4 - 0.75hp	160M/4 - 15hp	112MP/4 - 5hp	280SP/4 - 100hp	S250T	MKN250	SEP 300
	N280TC	IEC 112	80L/4 - 1hp	160L/4 - 20hp	132SP/4 - 7.5hp	280MP/4 - 125hp	S280T	MKN280	Servo Adapter (Clamp)
	N320TC	IEC 132	90S/4 - 1.5hp	180MX/4 - 25hp	132MP/4 - 10hp	315SP/4 - 150hp	S320T	MKN320	SEK 100
	N360TC	IEC 160	90L/4 - 2hp	180LX/4 - 30hp	160MP/4 - 15hp	315MP/4 - 175hp	S360T	MKN360	SEK 130
		IEC 180	100L/4 - 3hp	200LX/4 - 40hp	160LP/4 - 20hp	315RP/4 - 200hp			SEK 165
		IEC 200			180MP/4 - 25hp	315LP/4 - 250hp			SEK 215
		IEC 225			180LP/4 - 30hp				SEK 300
		IEC 250							
		IEC 280							
		IEC 315		Other Speeds Available		Other Speeds Available			

Product Specifications

Ratio

4.79 :1

see pages 101 - 149

— OR —

Output Speed

rpm

see pages 101 - 149

Mounting Position

- ❍ M1
- ❍ M2
- ❍ M3
- ❍ M4
- ❍ M5
- ❍ M6
- ❍ Special _____

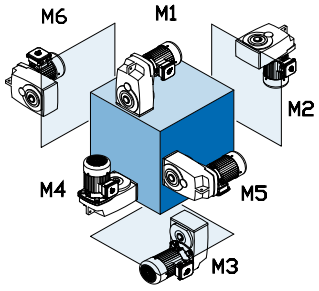

Paint

- ❍ Standard Stainles Steel Paint
- ❍ NSD+ (gray)
- ❍ NSD+W (white)
- ❍ NSD-X3 (gray)
- ❍ NSD-X3W (white)
- ❍ Casting Primed
- ❍ Special _____

Lubricant

- ❍ Standard
- ❍ Synthetic
- ❍ Food Grade
- ❍ Other _____

Shaft Diameter (If required)

1.1875"

see pages 278 - 285

B5 Flange Diameter (If required)

6.3" (160 mm)

SCP Drive Shaft Diameter (If required)

see page 83

Voltage & Frequency

Single Speed Motors	Two Speed Motors
❍ 230/460V-60Hz	❍ 460V-60Hz
❍ 208-230/460V-60Hz	❍ 230V-60Hz
❍ 575V-60Hz	❍ 575V-60Hz
❍ 400V-50Hz	❍ 400V-50Hz
❍ Other	❍ Other

Terminal Box Position

- ❍ TB1
- ❍ TB2
- ❍ TB3
- ❍ TB4

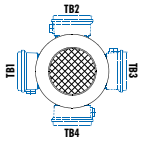

Conduit Entry Location

- ❍ CE I *
- ❍ CE II
- ❍ CE III *
- ❍ CE IV

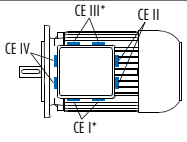

*Brakemotor

Hand Release Position

- ❍ HL1
- ❍ HL2
- ❍ HL3
- ❍ HL4

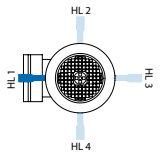

HELICAL & BEVEL REDUCER LUBRICATION

1. Importance of proper lubrication

Proper gearbox lubrication is essential in order to reduce friction, heat, and component wear. Lubricants reduce heat and wear by inserting a protective "fluid boundary" between mating parts and preventing direct metal to metal contact. Lubricants also help prevent corrosion and oxidation, minimize foam, improve heat transfer, optimize reducer efficiency, absorb shock loads and reduce noise.

Most NORD reducers are shipped from the factory with a pre-determined oil fill level in accordance to the specified reducer size and mounting position.

2. Standard oil type

The following tables indicate the standard oil fill type used. Please see user manual U11000 for more specific information and for optional helical and bevel gear lubricants:

Serviceable Gear Units	
Helical In-line Clincher Parallel-Shaft Right-Angle Bevel NORDBLOC® Series In-line NORDBLOC®.1 Series In-line Standard Series In-line	Standard Oil Fill: ISO VG 220, Mineral Oil

IMPORTANT NOTE

For shipping purposes, the following large gear units are supplied without oil:
- Clincher™ Sizes SK10282, SK10382, SK11282 and SK12382
- Right-Angle Bevel Size SK9096.1

Maintenance-free / Lubricated For Life Gear Units	
Clincher™ sizes SK0182NB, SK0282NB & SK1382NB NORDBLOC® Sizes SK172, SK272, SK371F, SK372, SK373, SK320	Standard Oil Fill: ISO VG220 SHC/PAO Synthetic Oil

IMPORTANT NOTE

Maintenance-free units are supplied as sealed units with no vent-plug. Consult NORD prior to ordering if interested in ordering any of the above sizes as serviceable gear units.

IMPORTANT NOTE

Consult the sticker adjacent to the fill plug to determine the type of lubricant installed at the factory. Some units have special lubricants designed to operate in certain environments or intended to extend the service life or service temperature range of the lubricant. If in doubt about which lubricant is needed for a certain application, please contact NORD Gear.

3. Lubrication replacement

If the gear unit is filled with mineral oil, the lubricant should be replaced at least after every 10,000 operating hours or after every two years. If the gear unit is filled with synthetic oil, the lubricant should be replaced at least after every 20,000 operating hours or after every four years. Often gear reducers are exposed to extreme ambient conditions, hostile environments, wet conditions, or dirty and dusty operating areas. Especially in these situations, it is important to establish a condition-based oil service interval.

4. Oil viscosity

Viscosity, or the oil's resistance to shear under load, is often considered the single most important property of any gear oil.

- Often one will consider making a viscosity correction to the oil to improve the performance when operating the gear unit at low temperature or high temperature.
- In cases of extreme load conditions, gear pairs and antifriction bearings may be more susceptible to sliding or scuffing wear. In these operating conditions, it may also be beneficial to consider an increased lubrication viscosity and/or a lubrication with improved antiwear additive packages.

IMPORTANT NOTE

The user should consult with their primary lubrication supplier before considering changes in oil type or viscosity.

5. Maximum oil sump temperature limit

To prevent reducer overheating, the reducer's maximum oil sump temperature limit must not be exceeded for prolonged periods of operation (up to 3 hours continuous operation depending upon reducer size).

Oil Type	Maximum Oil Temperature Limit	
	NORD	AGMA 9005-D94
Mineral	80-85°C (176-185°F)	95°C (203°F)
Synthetic	105°C (220°F)	107°C (225°F)

IMPORTANT NOTE

Use caution when specifying gear reducers for high temperature service. If there is concern about exceeding the allowable safe operating temperatures, please consult NORD to discuss alternatives.

HELICAL & BEVEL REDUCER LUBRICATION

6. The importance of routine oil analysis

Routine oil analysis, sound lubrication practices, and good tracking of oil performance trends will help establish proper lubrication maintenance and change-out intervals. To maximize equipment reliability, NORD Gear generally recommends a condition-based lubrication maintenance program. One may take exceptions to this general recommendation on sealed-for-life or maintenance-free gear units or smaller and less costly gear units. In these instances, the replacement cost of the gear unit is often small compared to the costs associated with this type of oil analysis program.

STOP ***HARMFUL SITUATION*** **STOP**

NORD suggests replacing the gear oil if oil analysis indicates any of the following:

- Viscosity has changed by approximately 10% or more.
- Debris particles (silicon, dust, dirt or sand) exceed 25 ppm.
- Iron content exceeds 150-200 ppm.
- Water content is greater than 0.05% (500 ppm).
- The total acid number (TAN) tests indicate a significant level of oxidative break-down of the oil, and a critical reduction in performance; If the TAN number measured changes by more than 5% over the new oil, then an oil change would be recommended.

7. Mounting position and oil fill quantity

All NORD Gear reducers are shipped from the factory with a pre-determined oil fill level in accordance to the specified reducer size and mounting position. ***For additional information, please see the seperate mounting position diagrams and the corresponding oil fill quantity tables for the specified gear unit.***

The gearbox nametag will indicate the mounting position that was provided. ***For mounting orientations other than shown in the mounting position charts, please consult NORD Gear.***

STOP ***HARMFUL SITUATION*** **STOP**

Actual oil volume can vary slightly depending upon the gear case size, mounting and ratio. Prior to commissioning the reducer, check the oil-fill level using the reducer's oil-level plug and drain or add additional oil as needed.

8. Oil plug locations

All gear units are assembled with the oil fill-level, oil-drain and vent plugs installed in their proper locations, according to the specified mounting position. All standard plugs are metric and utilize sealing gaskets between the head of the plug and the reducer housing.

9. Drain and fill-level plugs

All reducer drain plugs are metric socket head cap screws. For ease of draining the used oil from the gear reducer use the socket head screw located at the lowest part of the gearbox. For ease of identification, it is NORD's standard practice to provide a hex-head screw for the fill-level plug.

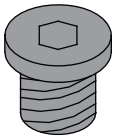

Drain Plug

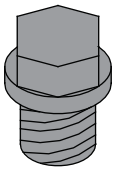

Fill Level Plug

10. Vent plug locations

Reducer venting allows for air pressure differences that occur during operation, between the inner space of the reducer and the atmosphere, while ensuring leak-free operation. The AUTOVENT™ is standard on all helical-inline gear units.

AUTOVENT™ - The AUTOVENT™ helps prevent bearing and gear damage by blocking entry of foreign material (water, dust, corrosives, etc.). The breather acts like a check valve that opens at approximately 2 psi during operation, closes tightly as the gearbox cools, and produces a slightly negative pressure. This option is perfect for humid conditions and wash-down environments, helping to maintain proper oil cleanliness, and reducing foaming and oxidation.

Open Vent - An optional open vent can be supplied on NORD reducers. The open vent will be closed upon delivery to prevent oil leakage. Before the reducer is put into operation the open vent should be activated by removing the sealing plug.

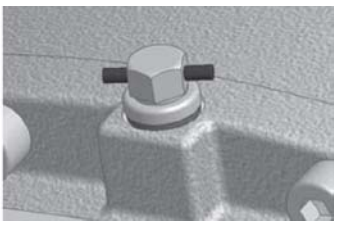

Sealed open vent

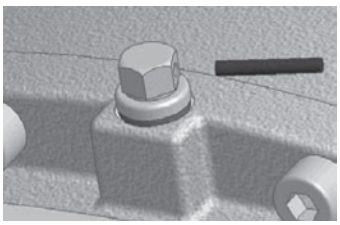

Activated open vent

Filtered Vent - NORD may offer an optional filtered vent, which allows gases to permeate, but does not allow dust and debris to pass through the vent.

HELICAL & BEVEL REDUCER LUBRICATION TYPES

Lubrication Tables – Helical and Bevel Gear Units

Standard Oil Lubricants

ISO Viscosity	Oil Type	Ambient Temperature Range	Manufacturer Brand / Type
VG220	MIN-EP	0 to 40 °C (32 to 104 °F)	Mobil / Spartan EP220 ♦ ❶
	PAO	-35 to 60 °C (-31 to 140 °F)	Mobil / SHC630 ♦ ❷
	FG	-5 to 40 °C (23 to 104 °F)	Shell / FM220 ♦

Optional Oil Lubricants

ISO Viscosity	Oil Type	Ambient Temperature Range	Manufacturer Brand / Type
VG460	PAO	-35 to 80 °C (-31 to 176 °F)	Mobil / SHC634
	FG-PAO	-40 to 80 °C (-40 to 176 °F)	Shell / Cassida GL460
VG220	FG-PAO	-40 to 60 °C (-40 to 140 °F)	Shell / Cassida GL220
VG150	PAO	-35 to 25 °C (-30 to 77 °F)	Mobil / SHC629
	FG-PAO	-45 to 25 °C (-49 to 77 °F)	Shell / Cassida GL220

Grease Options (applied to greased bearings and seal cavities)

NLGI Grade	Grease Type / Thickener	Ambient Temperature Range	Manufacturer Brand / Type
NLGI 2	Standard / Li-Complex	-30 to 60 °C (-22 to 140 °F)	Shell Albida EP 2 ♦ ❶
	High-Temperature / Polyurea	-25 to 80 °C (-13 to 176 °F)	Mobil Polyrex EP 2 ♦ ❷
	Food-Grade / Al-Complex	-25 to 40 °C (-13 to 104 °F)	Mobil Grease FM222 ♦

♦ Stocked Lubricants

❶ Standard product on serviceable gear units

❷ Standard product on maintenance free gear units

IMPORTANT NOTES

- The "Ambient Temperature" is intended to be an operation guideline based upon the typical properties of all the lubricant. The viscosity and other properties of the lubricant change based upon load, speed, ambient conditions, and reducer operating temperatures. The user should consult with their lubrication supplier & NORD gear before considering changes in oil type or viscosity.
- To prevent reducer overheating, observe the maximum operating oil temperature limits:
  Mineral Oil: 80-85 °C (176 – 180 °F).
  Synthetic Oil: 105 °C (225 °F).
- In the following instances, please consult NORD for specific recommendations:
  - √ Gear units will operate in high ambient temperature conditions exceeding 40 °C (104 °F).
  - √ Gear units will operate in cold ambient temperature conditions approaching 0 °C (32 °F) or lower.
  - √ Lower than an ISO VG100 viscosity oil is being considered for a cold-temperature service.
  - √ Fluid grease is required for lubricating the gear unit.
- Observe the general lubrication guidelines outlined in user manual U10750.

Oil Formulation Codes

MIN-EP - Mineral Oil with EP Additive
PAO-EP - Synthetic Polyalphaolefin Oil with EP Additive
PAO - Synthetic Polyalphaolefin Oil
PG - Synthetic Polyglycol Oil
FG - Food-Grade Oil
FG-PAO - Food-Grade, Synthetic Poyalphaolefin Oil
FG-PG - Food-Grade, Synthetic Polyglycol Oil

Lubrication Notes

- Avoid using (EP) gear oils in worm gears that contain sulfur-phosphorous chemistries, as these additives can react adversely with bronze worm gears and accelerate wear.
- Food grade lubricants must be in compliance with FDA 212 CFR 178.3570 and qualify as a NSF-H1 lubricant. Please consult with lubrication manufacturer for more information.
- When making a lubrication change, check with the lubrication supplier to assure compatibility and to obtain recommended cleaning or flushing procedures.
- Do not to mix different oils with different additive packages or different base oil formulation types. Polyglycol (PG) oils are not miscible with other oil types and should never be mixed with mineral oil or polyalphaolefin (PAO) synthetic oil.

HELICAL & BEVEL REDUCER LUBRICATION TYPES

Oil Cross-reference Chart

ISO Viscosity	Oil Type	Ambient Temperature Range	Mobil	Shell	Castrol	FUCHS	KLÜBER LUBRICATION
VG460	MIN-EP	0 to 40 °C (32 to 104 °F)	Spartan EP460	Omala 460	Alpha SP460	Renolin EP460	Klüberoil GEM 1-460N
	PAO-EP	-20 to 80 °C (-4 to 176 °F)	Mobilgear SHC460	Omala HD460	Alphasyn EP460	Gearmaster SYN460/NA	Klübersynth EG 4-460
	PAO	-20 to 80 °C (-4 to 176 °F)	Mobil SHC634	Omala RL460	Alphasyn T460	Geralyn SF460	Klübersynth GEM 4-460N
	PG	-20 to 80 °C (-15 to 176 °F)	Mobil Glygoyle 460	Tivela S460	Alphasyn PG460	Renolin PG460	Klübersynth GH 6-460
	FG	0 to 40 °C (32 to 104 °F)	Mobil DTE FM460	Shell FM460	N/A	Geralyn AW 460	N/A
	FG-PAO	-20 to 80 °C (-4 to 176 °F)	Mobil Cibus SHC460	Cassida GL460	N/A	Geralyn SF460	Klüberoil 4 UH 1-460N
	FG-PG	-20 to 80 °C (-4 to 176 °F)	Mobil Glygoyle 460	Cassida WG460	N/A	N/A	Klübersynth UH1 6-460
VG220	MIN-EP	0 to 40 °C (32 to 104 °F)	Spartan EP220	Omala 220	Alpha SP220	Renolin EP220	Klüberoil GEM 1-220N
	PAO-EP	-30 to 60 °C (-22 to 140 °F)	Mobilgear SHC220	Omala HD220	Alphasyn EP220	Gearmaster SYN220/NA	Klübersynth EG 4-220
	PAO	-30 to 60 °C (-22 to 140 °F)	Mobil SHC630	Omala RL220	Alphasyn T220	Geralyn SF220	Klübersynth GEM 4-220N
	PG	-25 to 60 °C (-13 to 140 °F)	Mobil Glygoyle 220	Tivela S220	Alphasyn PG220	Renolin PG220	Klübersynth GH 6-220
	FG	0 to 40 °C (32 to 104 °F)	Mobil DTE FM 220	Shell FM220	N/A	Geralyn AW220	N/A
	FG-PAO	-25 to 60 °C (-13 to 140 °F)	Mobil Cibus SHC220	Cassida GL220	N/A	Geralyn SF220	Klüberoil 4 UH 1-220N
	FG-PG	-25 to 60 °C (-13 to 140 °F)	Mobil Glygoyle 220	Cassida WG220	N/A	N/A	Klübersynth UH1 6-220
VG150	MIN-EP	0 to 25 °C (32 to 77 °F)	Spartan EP150	Omala 150	Alpha SP150	Renolin EP150	Klüberoil GEM 1-150N
	PAO-EP	-30 to 25 °C (-22 to 77 °F)	Mobilgear SHC150	Omala HD150	Alphasyn EP150	Gearmaster SYN150/NA	Klübersynth EG 4-150
	PAO	-30 to 25 °C (-22 to 77 °F)	Mobil SHC629	Omala RL150	Alphasyn T150	Geralyn SF150	Klübersynth GEM 4-150N
	PG	-25 to 25 °C (-13 to 77 °F)	Mobil Glygoyle 150	Tivela S150	Alphasyn PG150	Renolin PG150	Klübersynth GH 6-150
	FG	0 to 25 °C (32 to 77 °F)	Mobil DTE FM 150	N/A	N/A	N/A	N/A
	FG-PAO	-25 to 25 °C (-13 to 77 °F)	N/A	Cassida GL150	N/A	Geralyn SF150	Klüberoil 4 UH 1-150N
	FG-PG	-25 to 25 °C (-13 to 77 °F)	Mobil Glygoyle 150	N/A	N/A	N/A	Klübersynth UH1 6-150

Low-end service temperature limit may vary for a specific lubricant; Please also see the important notes on Page 1.

7 Appendix

7.1 Versions and maintenance

Explanation of symbols for the following mounting position illustrations:

Venting

Oil level

Oil drain

Information

SK 320, SK 172, SK 272, SK 372 as well as SK 273 and SK 373, SK 01282 NB, SK 0282 NB, SK 1382 NB and UNIVERSAL / MINIBLOC gear units are lubricated for life. These gear units do not have an oil filler screw.

UNIVERSAL / MINIBLOC worm gear units

NORD UNIVERSAL / MINIBLOC worm gear units are suitable for all installation positions. They have an oil filling which is independent of the mounting position.

As an option, types SI and SMI can be equipped with a vent screw. Gear units with vents must be installed in the stated mounting position.

Types SI, SMI, S, SM and SU as 2-stage gear unit types and types SI, SMI as worm gear units for direct motor mounting have an oil filling which depends on the mounting position and must be installed in the stated position.

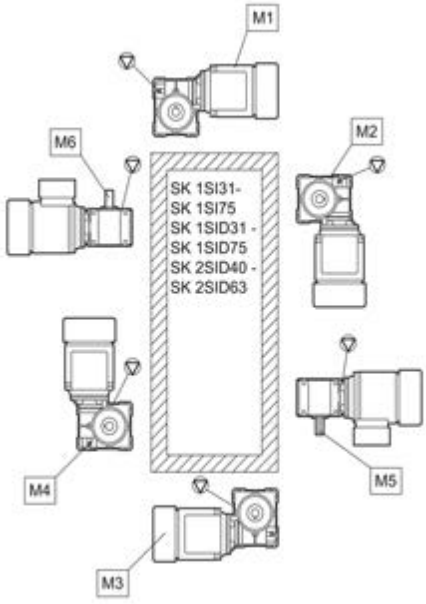

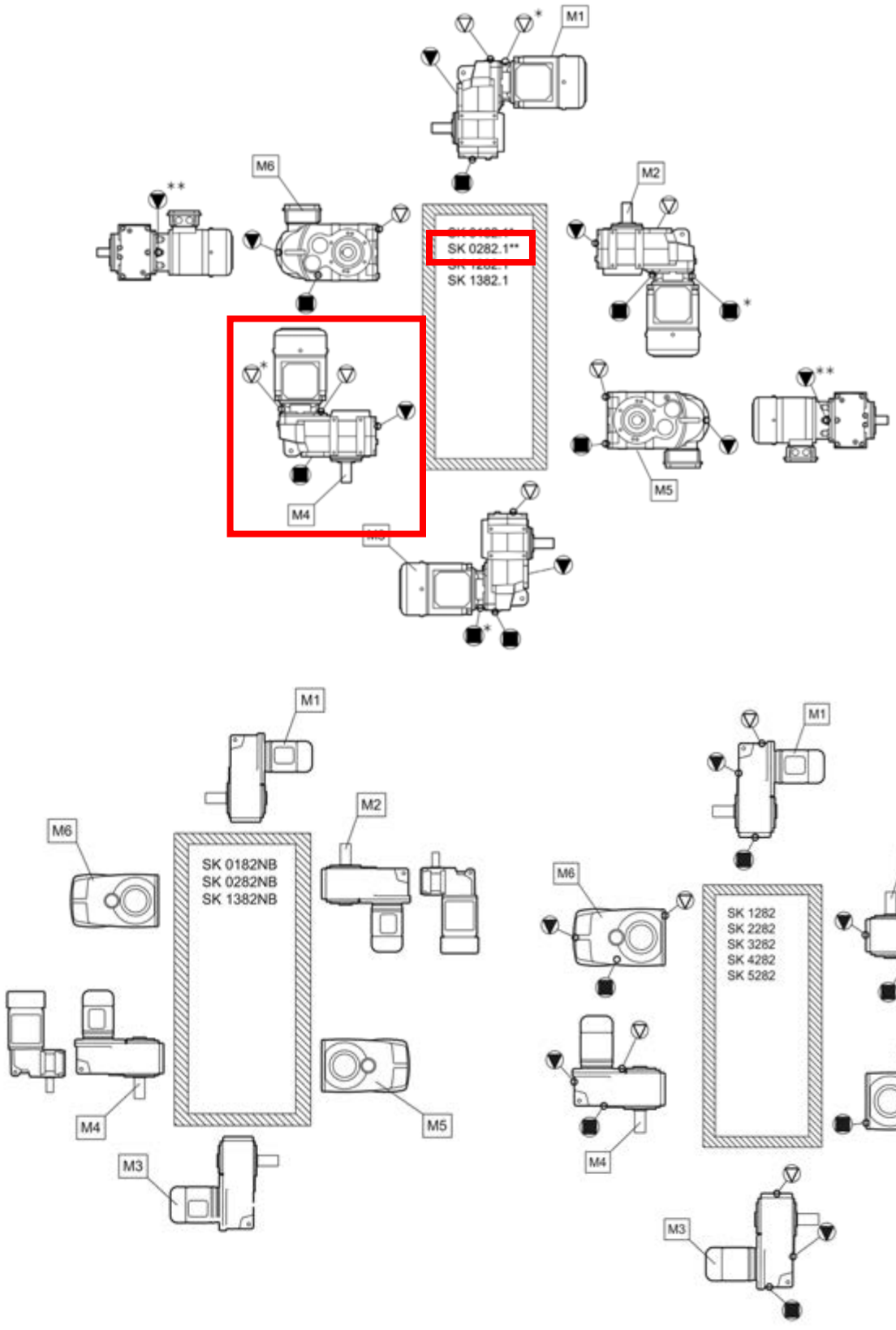
M1
M6
M2
SK 0282.1**
SK 1382.1
M4
M5
M3
SK 0182NB
SK 0282NB
SK 1382NB
SK 1282
SK 2282
SK 3282
SK 4282
SK 5282

Parallel shaft gear units

[L]	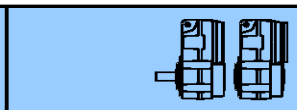						[L]	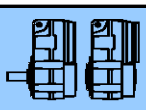					
	M1	**M2**	**M3**	**M4**	**M5**	**M6**		**M1**	**M2**	**M3**	**M4**	**M5**	**M6**
SK0182NB A	0,40	0,55	0,55	0,40	0,40	0,40							
SK0182.1 A	0,70	1,08	0,62	0,88	0,60	0,64							
SK0282.1 A	1,02	1,44	0,80	1,33	0,80	0,87							
SK1282.1 A	1,67	2,16	1,05	1,95	1,28	1,34							
SK1382.1 A	1,67	2,16	1,05	1,95	1,28	1,34							
SK0282NB A	0,70	1,10	0,80	1,10	0,90	0,90	**SK1382NB A**	1,40	2,30	2,20	2,20	2,00	2,00
[L]	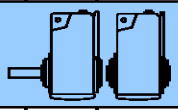						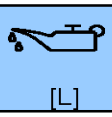 [L]	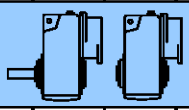					
SK1282 A	0,95	1,30	0,90	1,30	1,00	1,00	**SK1382 A**	1,45	1,60	1,15	1,70	1,10	1,10
SK2282 A	1,70	2,30	1,70	2,20	1,90	1,90	**SK2382 A**	2,30	2,70	2,10	3,20	2,00	2,00
SK3282 A	2,80	4,00	3,30	3,80	3,00	3,00	**SK3382 A**	3,80	4,30	3,00	5,50	3,00	3,00
SK4282 A	4,20	5,40	4,40	5,00	4,20	4,20	**SK4382 A**	6,10	6,90	4,90	8,40	5,00	5,00
SK5282 A	7,50	8,80	7,50	8,80	7,20	7,20	**SK5382 A**	12,50	12,00	6,70	14,00	8,30	8,30
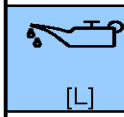 [L]	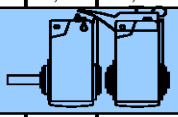						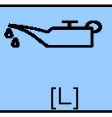 [L]	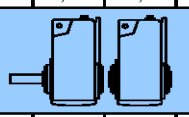					
SK6282 A	17,00	15,50	12,50	17,50	11,00	14,00	**SK6382 A**	16,00	13,00	10,00	18,00	14,00	12,50
SK7282 A	25,50	21,00	20,50	27,00	16,00	21,00	**SK7382 A**	22,00	21,00	16,00	25,00	23,00	22,00
SK8282 A	37,50	33,00	30,50	44,00	31,00	31,00	**SK8382 A**	34,50	32,50	25,00	38,00	35,00	30,00
SK9282 A	75,00	70,00	56,00	80,00	65,00	59,00	**SK9382 A**	74,00	70,00	43,00	75,00	65,00	60,00
[L]	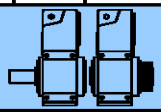						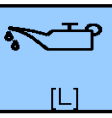 [L]	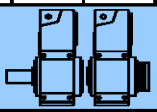					
SK10282 A	90	90	40	90	60	82	**SK10382 A**	85	90	73	100	80	80
SK11282 A	165	160	145	195	100	140	**SK11382 A**	160	155	140	210	155	135
							SK12382 A	160	155	140	210	155	135
							SK10382.1 A	76,0	80,0	71,0	93,0	72,0	67,0
							SK11382.1 A	127	133	118	194	124	112

Table 10: Lubricant quantities for parallel shaft gear units

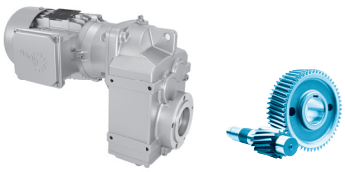

imperial 60 Hz
SK 0282.1

	i_{ges}	W n_2 [rpm]	W M_{2max} $f_B = 1$ [lb-in]	W P_{1max} $f_B \geq 1$ [hp]	W n_2 [rpm]	W M_{2max} $f_B = 1$ [lb-in]	W P_{1max} $f_B \geq 1$ [hp]	W n_2 [rpm]	W M_{2max} $f_B = 1$ [lb-in]	W P_{1max} $f_B \geq 1$ [hp]	NEMA f_B ⇨ 29-36 NEMA 56C	NEMA 140TC	NEMA 180TC		
					n_1 = 1750 rpm			n_1 = 1150 rpm			n_1 = 875 rpm				
SK 0282.1	**247.02**	**7.1**	1593	0.18	4.7	1593	0.12	3.5	1593	0.09	*	*			
	228.16	**7.7**	1770	0.22	5	1770	0.14	3.8	1770	0.11	*	*			
	201.65	**8.7**	1770	0.24	5.7	1770	0.16	4.3	1770	0.12	*	*			
W + NEMA	**190.64**	**9.2**	1770	0.26	6	1770	0.17	4.6	1770	0.13	*	*			
inch	**161.34**	**11**	1770	0.3	7.1	1770	0.2	5.4	1770	0.15	*	*			
⇨ 54-55	**140.98**	**12**	1770	0.35	8.2	1770	0.23	6.2	1770	0.17	*	*			
	126.98	**14**	1770	0.39	9.1	1770	0.25	6.9	1770	0.19	*	*			
	110.96	**16**	1770	0.44	10	1770	0.29	7.9	1770	0.22	*	*			
	103.89	**17**	1770	0.47	11	1770	0.31	8.4	1770	0.24	*	*			
	92.51	**19**	1770	0.53	12	1770	0.35	9.5	1770	0.27	*	*			
W + IEC	**75.69**	**23**	1770	0.65	15	1770	0.43	12	1770	0.32	*	*			
mm	**66.66**	**26**	1770	0.74	17	1770	0.48	13	1770	0.37	*	*			
⇨ 26-27	**53.03**	**33**	1593	0.83	22	1593	0.55	16	1593	0.42	*	*			
	43.78	**40**	1770	1.12	26	1770	0.74	20	1770	0.56		*			
	38.14	**46**	1770	1.29	30	1770	0.85	23	1770	0.64		*			
	33.44	**52**	1770	1.47	34	1770	0.97	26	1770	0.73		*			
	29.56	**59**	1770	1.66	39	1770	1.09	30	1770	0.83		*			
	26.32	**66**	1770	1.87	44	1770	1.23	33	1770	0.93		*			
	21.53	**81**	1770	*2*	53	1770	1.5	41	1770	1.14		*			
	18.96	**92**	1770	*2*	61	1770	*1.64*	46	1770	*1.25*		*			
	18.24	**96**	1770	*2*	63	1770	*1.64*	48	1770	*1.25*		*			
	16.12	**109**	1770	*2*	71	1770	*1.64*	54	1770	*1.25*		*			
	14.36	**122**	1770	*2*	80	1770	*1.64*	61	1770	*1.25*		*			
	12.78	**137**	1770	*2*	90	1770	*1.64*	68	1770	*1.25*		*			
	11.30	**155**	1770	*2*	102	1770	*1.64*	*77*	1770	*1.25*		*			
	10.06	**174**	1770	*2*	114	1770	*1.64*	*87*	1770	*1.25*		*			
	9.18	**191**	1770	*2*	126	1770	*1.64*	96	1770	*1.25*		*			
	8.24	**213**	1770	*2*	140	1770	*1.64*	106	1770	*1.25*		*			
	6.82	**257**	1770	*2*	169	1770	*1.64*	128	1770	*1.25*		*			
	6.43	**273**	1593	*2*	179	1593	*1.64*	136	1593	*1.25*		*			
	5.47	**320**	1416	*2*	210	1416	*1.64*	160	1416	*1.25*		*			
	4.79	**366**	1416	*2*	241	1416	*1.64*	183	1416	*1.25*		*			

* Caution, do not exceed the maximum drive power P_{1max} according to the Type W column

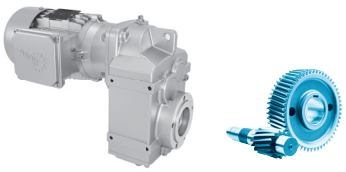

SK 0282.1 AXZ

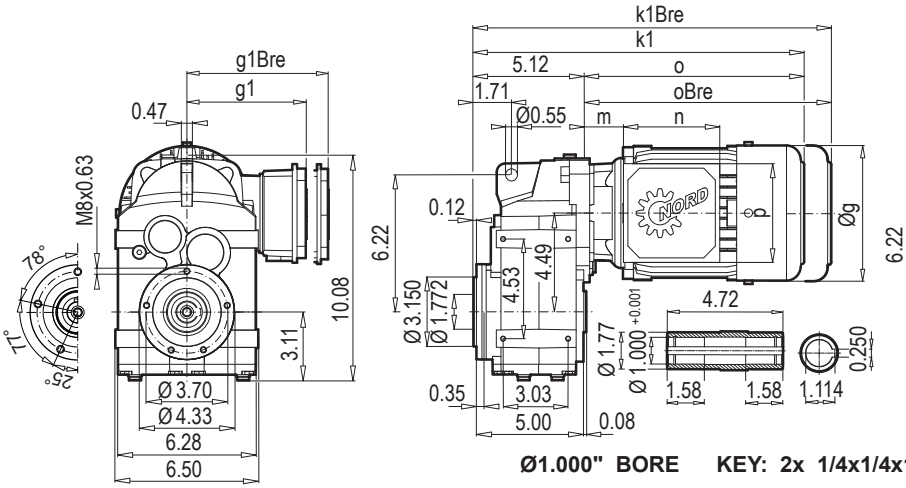

SK 0282.1 VXZ

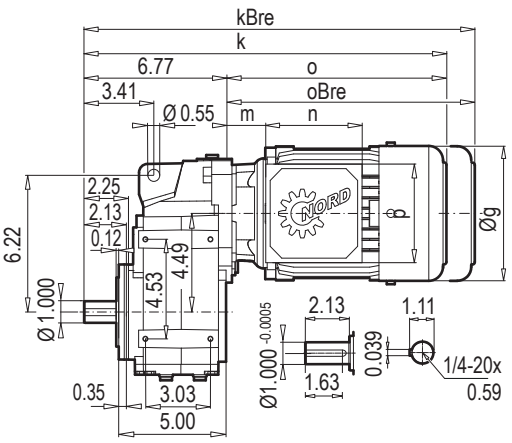

Ø1.000" BORE KEY: 2x 1/4x1/4x1.0“ B

SK 0282.1 AXF

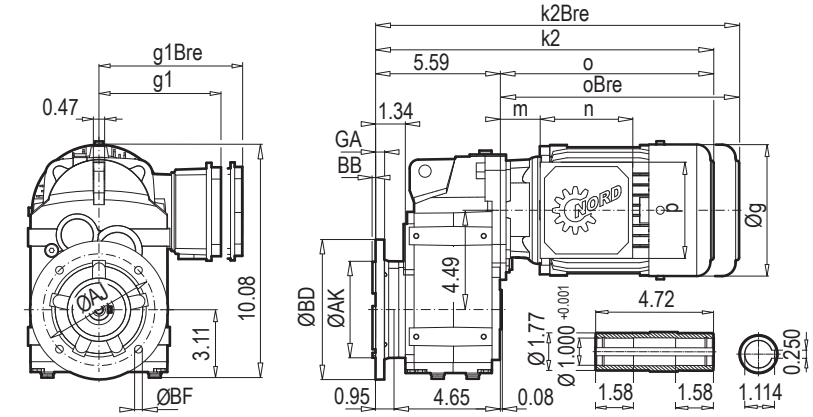

SK 0282.1 VXF

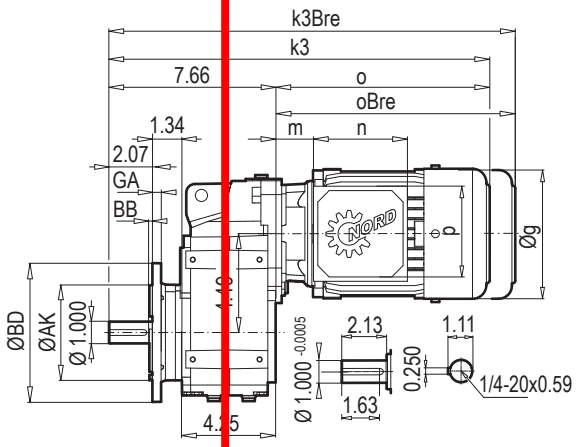

Ø1.000" BORE KEY: 2x 1/4x1/4x1.0“ B

BD (mm)	AK +/-	GA	AJ	BB	BF
6.30 (160)	4.331 +0.0005/-0.00004	0.39	5.118	0.14	4 x 0.35

SK 0282.1 AXF**B** / AXZ**B**

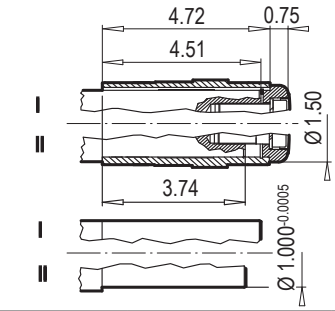

SK 0282.1 AXZ**G** / VXZ**G**

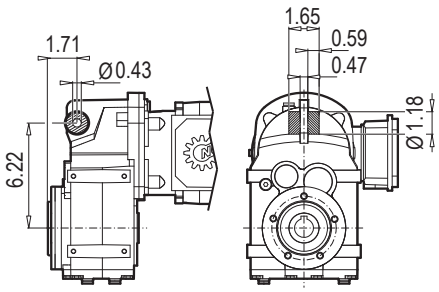

SK 0282.1 AXZ**SH**

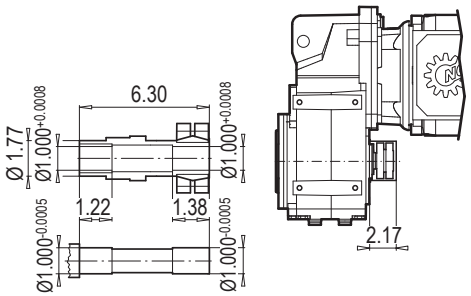

	63 SP/LP	71 SP/LP	80 SP/LP	90 SP/LP		
g	5.09	5.72	6.46	7.19		
g1 / g1Bre	4.51 / 4.84	4.86 / 5.24	5.59 / 5.59	5.79 / 5.79		
k / kBre	14.51 / 16.72	16.09 / 18.37	17.07 / 19.59	18.69 / 21.64		
k1 / k1Bre	12.84 / 15.04	14.41 / 16.69	15.39 / 17.91	17.01 / 19.96		
k2 / k2Bre	13.33 / 15.53	14.90 / 17.18	15.88 / 18.41	17.50 / 20.45		
k3 / k3Bre	15.40 / 17.61	16.98 / 19.26	17.94 / 20.48	19.55 / 22.51		
o / oBre	7.72 / 9.92	9.29 / 11.58	10.28 / 12.80	11.89 / 14.84		
m / mBre	0.63 / 0.87	1.65 / 1.89	1.85 / 1.97	2.05 / 2.17		
n / nBre	3.95 / 5.28	3.95 / 5.28	4.49 / 6.03	4.49 / 6.03		
p / pBre	3.95 / 3.51	3.95 / 3.51	4.49 / 4.25	4.49 / 4.25		

W ⇨📖 54

NEMA ⇨📖 55

Fixing Element Kit

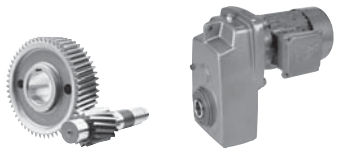

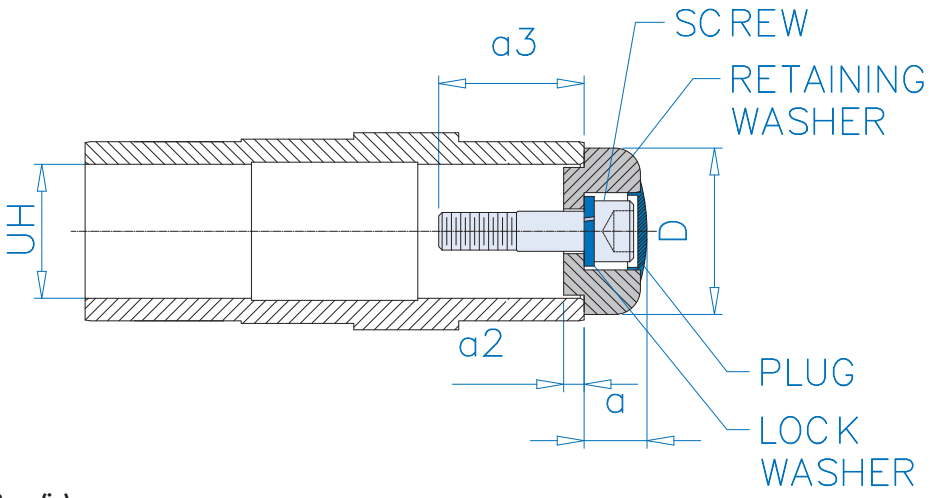

Inch Shaft Hollow Bore (in)

UH	D	a	a2	Screw ❶	a3 ❶	Screw ❷	a3 ❷	Screw ❸	a3 ❸
0.5000	0.984	0.565	0.110	10 - 32 x 5/8	0.499	-	-	-	-
0.7500	1.181	0.557	0.118	1/4 - 20 x 3/4	0.652	1/4 - 20 x 1	0.902		
1.0000	1.496	0.767	0.150	3/8 - 16 x 3/4	0.624	3/8 - 16 x 1-1/4	1.124	-	-
1.1875	1.575	0.769	0.150	7/16 - 14 x 2-1/16	2.016	-	-	-	-
1.2500	1.575	0.769	0.150	7/16 - 14 x 2-1/16	2.016	-	-	-	-
1.3750	1.772	0.946	0.197	5/8 - 11 x 1-1/2	1.461	5/8 - 11 x 2-1/4	2.211	5/8 - 11 x 1	0.961
1.4375	1.772	0.946	0.197	5/8 - 11 x 1-1/2	1.461	5/8 - 11 x 2-1/4	2.211	5/8 - 11 x 1	0.961
1.5000	1.772	0.946	0.197	5/8 - 11 x 1-1/2	1.461	5/8 - 11 x 2-1/4	2.211	5/8 - 11 x 1	0.961
1.6250	2.165	0.927	0.315	5/8 - 11 x 2	2.000	5/8 - 11 x 1-1/2	1.500	-	-
1.6875	2.165	0.927	0.315	5/8 - 11 x 2	2.000	5/8 - 11 x 1-1/2	1.500	-	-
1.9375	2.362	0.966	0.315	5/8 - 11 x 2-1/4	2.000	-	-	-	-
2.0000	2.559	0.971	0.315	5/8 - 11 x 2-1/4	2.250	-	-	-	-
2.0625	2.559	0.971	0.315	5/8 - 11 x 2-1/4	2.250	-	-	-	-
2.1875	2.559	0.971	0.315	5/8 - 11 x 2-1/4	2.250	-	-	-	-
2.3750	2.953	1.129	0.354	3/4 - 10 x 2-1/2	2.500	-	-	-	-
2.4375	2.953	1.129	0.354	3/4 - 10 x 2-1/2	2.500	-	-	-	-
2.7500	3.740	1.132	0.354	3/4 - 10 x 2-1/2	2.500	-	-	-	-
2.9375	3.740	1.132	0.354	3/4 - 10 x 2-1/2	2.500	-	-	-	-
3.1875	3.740	1.132	0.354	3/4 - 10 x 2-1/2	2.500	-	-	-	-
3.2500	4.106	1.132	0.354	3/4 - 10 x 2-1/2	2.500	-	-	-	-
3.4375	4.106	1.132	0.354	3/4 - 10 x 2-1/2	2.500	-	-	-	-
3.9375	4.724	1.299	0.394	7/8 - 9 x 3-1/2	3.500	-	-	-	-
4.0000	4.724	1.299	0.394	7/8 - 9 x 3-1/2	3.500	-	-	-	-
4.0625	4.724	1.299	0.394	7/8 - 9 x 3-1/2	3.500	-	-	-	-
4.4375	5.315	1.299	0.386	7/8 - 9 x 3-1/2	3.500	-	-	-	-
4.7500	5.906	1.299	0.394	7/8 - 9 x 3-1/2	3.500	-	-	-	-
4.9375	5.906	1.299	0.394	7/8 - 9 x 3-1/2	3.500	-	-	-	-

Metric Hollow Bore (mm)

UH	D	a	a2	Screw ❶	a3 ❶	Screw ❷	a3 ❷
25	38	19	3.8	M10 x 45	41.8	M10 x 30	26.8
30	40	19	3.8	M10 x 45	43.8	M10 x 30	28.8
35	45	23.5	5	M12 x 55	54	M12 x 35	34
40	55	23.7	8	M16 x 70	70	M16 x 45	45
50	65	24.7	8	M16 x 70	70	M16 x 45	45
60	75	29	9	M20 x 90	90	M20 x 55	55
70	95	29.3	9	M20 x 90	90	M20 x 55	55
80	102	29	9	M20 x 100	100	M20 x 55	55
100	120	34.5	10	M24 x 110	110	M24 x 65	65
120	150	34.5	10	M24 x 110	110	M24 x 65	65

❶, ❷, ❸ - Each fixing element kit may contain up to 3 different kinds of screws

High Performance Specifications

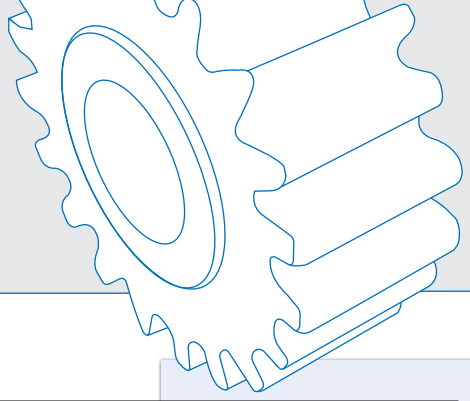

STANDARD EFFICIENCY MOTORS (se)

Motor Type	Power P_N [HP]	Power P_N [kW]	Full Load n_N [rpm]	Torque T_N [lb-in]	Full Load Current - I_N 230 V [A]	460 V [A]	575 V [A]	Pf cos φ	Eff. η [%]	Starting Torque T_A/T_N	Breakdown Torque T_K/T_N	Starting Current I_A/I_N	Code letter	Inertia J_m [lb-ft²]
63 S/4	0.16	0.12	1700	5.93	0.88	0.44	0.37	0.66	52	2.7	3.5	2.5	F	0.0050
63 L/4	0.25	0.18	1680	9.03	1.12	0.56	0.46	0.71	57	2.3	2.5	2.7	E	0.0066
71 S/4	0.33	0.25	1710	12.39	1.56	0.78	0.66	0.64	63	2.4	2.7	3.1	G	0.015
71 L/4	0.5	0.37	1720	18.14	1.90	0.95	0.8	0.69	71	2.3	2.7	3.5	F	0.018
80 S/4	0.75	0.55	1710	27.17	2.70	1.35	1.12	0.71	72	2.2	2.3	3.5	F	0.030
80 L/4	1	0.75	1650	38.41	3.66	1.83	1.46	0.74	70	2.2	2.3	3.9	G	0.039
90 S/4	1.5	1.1	1660	56.02	4.84	2.42	1.94	0.78	73	2.5	2.8	4.9	G	0.056
90 L/4	2	1.5	1660	76.11	6.34	3.17	2.54	0.80	74	2.5	2.8	5.1	G	0.074
100 L/4	3	2.2	1705	108.86	9.0	4.50	3.63	0.81	76	2.3	2.6	4.9	G	0.107
100 LA/4 ✪	5	3.7	1725	181.43	15.2	7.62	6.10	0.75	81	2.7	3.1	5.1	G	0.178
132 S/4	7.5	5.5	1735	268.16	19.8	9.90	7.92	0.82	85	2.4	2.7	5.4	G	0.553
132 M/4	10	7.5	1735	365.51	25.8	12.9	10.3	0.84	87	2.9	3.2	6.3	H	0.752
160 M/4	15	11	1770	524.81	35.8	17.9	14.5	0.85	90.7	2.9	3.8	8.2	H	1.19
160 L/4	20	15	1760	720.39	48.4	24.2	19.3	0.87	89.4	2.9	3.9	8.5	K	1.59
180 MX/4	25	18.5	1760	885.00	59.0	29.5	23.6	0.87	90.5	3.4	4.3	8.8	J	1.90
180 LX/4	30	22	1765	1053.15	74.4	37.2	29.76	0.80	92.8	3.6	4.4	8.9	H	2.18

ENERGY EFFICIENT MOTORS (ee)

Motor Type	Power P_N [HP]	Power P_N [kW]	Full Load n_N [rpm]	Torque T_N [lb-in]	Full Load Current - I_N 230 V [A]	460 V [A]	575 V [A]	Pf cos φ	Eff. η [%]	Starting Torque T_A/T_N	Breakdown Torque T_K/T_N	Starting Current I_A/I_N	Code letter	Inertia J_m [lb-ft²]
80 LH/4	1	0.75	1750	36.20	3.88	1.94	1.5	0.59	82.5	4.6	4.3	6.0	L	0.05
90 SH/4	1.5	1.1	1740	53.45	4.3	2.15	1.75	0.76	84.0	3.5	3.8	6.3	J	0.08
90 LH/4	2	1.5	1745	72.66	6.3	3.15	2.45	0.71	84.0	4.3	4.5	6.7	K	0.09
100 LH/4	3	2.2	1765	105.32	8.6	4.3	3.4	0.73	87.5	3.6	4.7	7.9	L	0.18
112 MH/4	5	3.7	1770	177.00	14.4	7.2	5.6	0.74	87.5	4.0	4.8	8.1	L	0.30
132 SH/4	7.5	5.5	1780	261.08	20.9	10.5	8.3	0.74	89.5	4.3	4.6	8.2	L	0.75
132 MH/4	10	7.5	1770	358.43	27	13.5	10.8	0.78	89.5	3.2	4.0	7.4	J	0.84
160 MH/4	15	11	1770	525.25	26	18	14.4	0.84	91.7	3.2	3.8	8.7	K	1.59
160 LH/4	20	15	1775	714.20	48	24	19.2	0.84	92.6	3.5	4.2	8.8	L	2.18
180 MH/4	25	18.5	1780	877.92	60	30	24	0.84	92.4	3.5	3.6	8.5	K	3.08
180 LH/4	30	22	1780	1044.30	70	35	28	0.85	92.4	3.6	3.6	8.3	J	3.80

PREMIUM EFFICIENT MOTORS (pe)

Motor Type	Power P_N [HP]	Power P_N [kW]	Full Load n_N [rpm]	Torque T_N [lb-in]	Full Load Current - I_N 230 V [A]	460 V [A]	575 V [A]	Pf cos φ	Eff. η [%]	Starting Torque T_A/T_N	Breakdown Torque T_K/T_N	Starting Current I_A/I_N	Code letter	Inertia J_m [lb-ft²]
80 LP/4	1	0.75	1730	36.46	3.14	1.57	1.30	0.70	86.1	3.4	3.8	6.5	L	0.05
90 SP/4	1.5	1.1	1740	53.99	4.20	2.10	1.68	0.76	86.9	4.1	4.9	8.4	J	0.08
90 LP/4	2	1.5	1730	75.23	5.60	2.80	2.24	0.78	87.0	3.8	4.2	7.6	K	0.09
100 LP/4	3	2.2	1770	104.43	7.70	3.84	3.07	0.79	90.0	3.0	4.5	9.2	L	0.19
112 MP/4	5	3.7	1755	177.89	13.0	6.50	5.20	0.80	90.3	3.8	4.3	9.1	L	0.33
132 SP/4	7.5	5.5	1770	261.08	19.5	9.80	7.80	0.77	91.7	4.7	5.0	10.2	L	0.76
132 MP/4	10	7.5	1765	355.77	26.6	13.3	10.6	0.77	91.7	4.7	5.0	9.6	J	0.83
160 MP/4	15	11	1770	522.15	35.6	17.8	14.2	0.84	92.5	3.2	3.8	8.8	K	1.59
160 LP/4	20	15	1775	716.85	47.6	23.8	19.0	0.85	93.0	4.3	4.6	10.8	L	2.18
180 MP/4	25	18.5	1780	876.15	61	30.3	24.2	0.82	93.6	3.4	3.6	8.6	K	3.80
180 LP/4	30	22	1780	1035.45	70	34.8	27.8	0.85	93.6	3.3	3.4	8.8	J	3.80

Technical DataSheets

Description :
UPS, TRIO, 750 VA
120 VAC INPUT, 120 VAC 6A OUTPUT

Trade Name :
Phoenix Contact

Model no :
2905908

2905908

TRIO-UPS-2G/1AC/1AC/120V/ 750VA

Uninterruptible power supply

Data sheet
107057_en_01

© PHOENIX CONTACT 2022-03-31

1 Description

The TRIO-UPS-2G uninterruptible power supply (UPS) is used to ensure that power for critical electrical loads continues to be supplied in the event of disturbances in the power supply network, e.g., due to mains breakdown or failure.

In doing so, the UPS switches to battery operation without interruption so that connected loads continue to be consistently supplied.

When mains power is restored, the UPS automatically returns to normal operation. The connected loads are again supplied via the power supply network and the battery is charged.

The product described here is an uninterruptible power supply (UPS) with integrated energy storage (2x 4 Ah).

Features

- Offline UPS in line with UPS classification code according to IEC 62040-3: VFD-SS-311
- Waveform Type: pure sine
- Optimum use of the buffer time and preventive battery monitoring
- Maximum energy efficiency: 95 % efficiency for charged energy storage device
- Startup from energy storage possible without mains input
- USB interface for connection to higher-level controllers, such as industrial PCs
- Can be extended with external energy storage (1x 24 V, 4 Ah)

Technical data (short form)	
Nominal input voltage	120 V AC
Input voltage range	96 V AC ... 138 V AC
Frequency range	45 Hz ... 55 Hz / 55 Hz ... 65 Hz
Current consumption	6 A (max.)
Nominal output voltage (U_N)	120 V AC
Nominal output current (I_N)	6 A
Apparent power	750 VA
Active power	600 W
Buffer period	20 min. (100 W) 4 min. (300 W) 1 min. (600 W)
Efficiency (100 % load, with charged energy storage)	> 95 %
MTBF (IEC 61709, SN 29500)	> 206000 h (40 °C)
Ambient temperature (operation)	0 °C ... 40 °C
Dimensions W/H/D	210 mm / 170 mm / 136 mm
Weight	5.7 kg
Battery technology	Lead rechargeable battery module
Battery type	2x Panasonic UP-VW1220P1 / BB Battery HR4.2-12FR
Nominal voltage (Energy storage)	24 V DC
Capacitance	4 Ah
Battery fuse	40 A, 32 V
Can be extended with external battery	yes , 1x 24 V / 4 Ah

All technical specifications are nominal and refer to a room temperature of 25 °C and 70% relative humidity at 2000 m above sea level.

4 Technical data

Input data	
Nominal input voltage	120 V AC
Input voltage range	96 V AC ... 138 V AC
Frequency range	45 Hz ... 55 Hz / 55 Hz ... 65 Hz
Current consumption	6 A (max.)
Permissible backup fuse	B10 / B16 (Listed breaker)
Input connection data	
Connection method	Push-in connection
Conductor cross section, rigid	0.2 mm² ... 4 mm²
Conductor cross section, flexible	0.2 mm² ... 2.5 mm²
Conductor cross section AWG/kcmil	24 ... 12
Stripping length	10 mm
Output data	
Apparent power	750 VA
Nominal power (real power)	600 W
Power factor (cos phi)	0.8
Crest factor	2.8
Switch-over time	< 10 ms
Classification according to IEC 62040-3	VFD-SS-311
Output data (normal operation)	
Nominal output voltage (U_N)	120 V AC
Nominal output current (I_N)	6 A (750 VA)
Input fuse	10 A , 400 V , gRL
Overload capacity	in accordance with internal fuse
Efficiency (100 % load, with charged energy storage)	> 95 %
Output data (battery operation)	
Nominal output voltage (U_N)	120 V AC
Nominal output current (I_N)	6 A (750 VA)
Frequency (after automatic detection in mains operation)	50 Hz / 60 Hz
Form of output voltage	Pure sine
Overload capacity	125 % 5 s, then shuts down
Efficiency (100 % load)	~ 81 %
Output connection data	
Connection method	Push-in connection
Conductor cross section, rigid	0.2 mm² ... 4 mm²
Conductor cross section, flexible	0.2 mm² ... 2.5 mm²
Conductor cross section AWG/kcmil	24 ... 12
Stripping length	10 mm

Energy storage	
Battery technology	Lead rechargeable battery module
Battery type	2x Panasonic UP-VW1220P1 / BB Battery HR4.2-12FR
Capacitance	4 Ah
Battery fuse	40 A, 32 V
Charge current	0.7 A ... 1.1 A
Charging time	7 h
Service life	6 (20 °C)
Latest startup	6 Months (0 °C ... 20 °C) 6 Months ... 3 Months (20 °C ... 30 °C) 3 Months ... 1 Months (30 °C ... 40 °C)
Buffer time	100 W / 20 min. ; 300 W / 4 min. ; 600 W / 1 min.
Can be extended with external battery	yes , 1x 24 V / 4 Ah

Connection data for the external battery	
Connection method	Push-in connection
Conductor cross section, rigid	0.2 mm² ... 10 mm²
Conductor cross section, flexible	0.2 mm² ... 6 mm²
Conductor cross section AWG/kcmil	24 ... 8
Stripping length	15 mm

Status and diagnostic indicator / signal output Alarm	
Switching output	Transistor output, active
Output voltage	24 V (SELV)
Continuous load current	≤ 20 mA
Status display	LED (red)

Status and diagnostic indicator / signal output Battery Mode	
Switching output	Transistor output, active
Output voltage	24 V (SELV)
Continuous load current	≤ 20 mA
Status display	LED (yellow)

Status and diagnostic indicator / signal output Ready	
Switching output	Transistor output, active
Output voltage	24 V (SELV)
Continuous load current	≤ 20 mA

Status and diagnostic indicator / signal output Battery Charge	
Status indication	LED (yellow)

Status and diagnostic indicators/signal outputs AC OK, $P>P_n$, Remote	
Status indication	LED (green)

Status and diagnostic indicator / signal output Service	
Status indication	LED (red)

Signal connection data	
Connection method	Push-in connection
Conductor cross section, rigid	0.2 mm² ... 1.5 mm²
Conductor cross section, flexible	0.2 mm² ... 1.5 mm²
Conductor cross section AWG/kcmil	24 ... 16
Stripping length	8 mm

Remote control (Remote)	Digital control input (configurable)
Low signal	Connection to SGnd with < 2.7 kΩ
High signal	Open (> 35 kΩ between Remote and SGnd)

Battery-operated start (bat. start)	Digital control input low-active
Low signal	Connection to SGnd with < 2.7 kΩ
High signal	Open (> 200 kΩ between Bat.-Start and SGnd)

Interfaces	
USB classification	MINI-USB type B
Maximum cable length	3 m

Device combinations	
UPS connection in parallel	no
UPS connection in series	no

General data	
Overvoltage category	II
MTBF	> 206000 h (40 °C)
Degree of protection	IP20
Protection class	I
Type of housing	DX51D+AZ (steel sheet / Galvalume)
Hood version	PC + ABS
Dimensions W/H/D (normal mounting position/delivered condition)	210 mm / 170 mm / 136 mm
Weight	5.7 kg

Ambient conditions	
Ambient temperature (operation)	0 °C ... 40 °C
Ambient temperature (storage/transport)	-15 °C ... 40 °C (with charged energy storage device)
Max. permissible relative humidity (operation)	≤ 95 % (25 °C, non-condensing)
Installation height	≤ 3000 m (> 2000 m, observe derating)
Vibration (operation)	5 Hz ... 100 Hz, 0.7g (EN 60068-2-6)
Shock	20g in all directions (EN 60068-2-27) 30g in each space direction with UWA 130
Degree of pollution	3
Climatic class	3K3 (in acc. with EN 60721)

Standards	
Uninterruptible power supply	EN 62040-1

Approvals	
UL approvals	UL/C-UL Recognized UL 1778

You will find the latest approvals for the item at phoenixcontact.net/products.

Electromagnetic compatibility / Conformance with EMC Directive 2014/30/EU		
Noise emission in accordance with EN 62040-2		
Conducted noise emission	EN 62040-02 (Class C2)	
Noise emission	EN 62040-02 (Class C2)	
Harmonic currents	EN 61000-3-2 (Class A)	
Immunity in accordance with EN 62040-2		
CE basic standard	**EN 62040-2 requirement**	**Tested**
Electrostatic discharge EN 61000-4-2		
Housing contact discharge	4 kV (Test Level 2)	6 kV (Test Level 3)
Housing air discharge	8 kV (Test Level 3)	8 kV (Test Level 3)
Comments	Criterion B	Criterion A
Electromagnetic HF field EN 61000-4-3		
Frequency range	80 MHz ... 1 GHz	80 MHz ... 3 GHz
Test field strength	10 V/m	10 V/m
Comments	Criterion A	Criterion A
Fast transients (burst) EN 61000-4-4		
Input	2 kV (Test Level 3 - asymmetrical)	2 kV (Test Level 3 - asymmetrical)
DC input	2 kV (Test Level 3 - asymmetrical)	2 kV (Test Level 3 - asymmetrical)
Output	2 kV (Test Level 3 - asymmetrical)	2 kV (Test Level 3 - asymmetrical)
Signal	2 kV (Test Level 3 - asymmetrical)	2 kV (Test Level 3 - asymmetrical)
Signal USB	2 kV	2 kV
Comments	Criterion B	Criterion A (B for USB)
Surge voltage load (surge) EN 61000-4-5		
Input	1 kV (Test Level 2 - symmetrical) 2 kV (Test Level 3 - asymmetrical)	1 kV (Test Level 2 - symmetrical) 2 kV (Test Level 3 - asymmetrical)
Output	1 kV (Test Level 2 - symmetrical) 2 kV (Test Level 3 - asymmetrical)	1 kV (Test Level 2 - symmetrical) 2 kV (Test Level 3 - asymmetrical)
Signal	1 kV (Test Level 2 - asymmetrical)	1 kV (Test Level 2 - asymmetrical)
Comments	Criterion B	Criterion A
Conducted interference EN 61000-4-6		
Frequency range	0.15 MHz ... 80 MHz	0.15 MHz ... 80 MHz
Voltage	10 V	10 V
Comments	Criterion A	Criterion A

Immunity in accordance with EN 62040-2		
CE basic standard	**EN 62040-2 requirement**	**Tested**
Power frequency magnetic field EN 61000-4-8		
Frequency	60 Hz	60 Hz
Test field strength	30 A/m	100 A/m
Comments	Criterion B	Criterion A

Key	
Criterion A	Normal operating behavior within the specified limits.
Criterion B	Temporary impairment to operational behavior that is corrected by the device itself.

Technical DataSheets

Description :
PROXIMITY SENSOR
CAPACITIVE PNP 24VDC
8 MM OF DETECTION WITH M12 CONNECTOR

Trade Name :
Schneider electric

Model no :
XT218A1PCM12

Product datasheet
Characteristics

XT218A1PCM12
capacitive sensor - XT1 - cylindrical M18 - plastic - Sn 8 mm - 12..24 V DC

Main

Range of product	OsiSense XT
Sensor type	Capacitive proximity sensor
Product specific application	Detection of insulated or conductive materials
Sensor name	XT2
Sensor design	Cylindrical M18
Size	78 mm
Body type	Fixed
Detector flush mounting acceptance	Non flush mountable
Material	Plastic
Enclosure material	Plastic
Type of output signal	Discrete
Wiring technique	4-wire
[Sn] nominal sensing distance	8 mm
Discrete output function	1 NC + 1 NO
Output circuit type	DC
Discrete output type	PNP
Electrical connection	4 pins M12 male connector
[Us] rated supply voltage	12...24 V DC with reverse polarity protection
Delay response	< 15 ms
IP degree of protection	IP67 double insulation conforming to IEC 60529

Complementary

ISO thread	M18 x 1
Detection face	Frontal
[Sa] assured operating distance	0...5.8 mm
Adjustment zone	0...12 mm
Differential travel	< 1...20 % Sr
Repeat accuracy	< 5 % Sr
Status LED	1 LED (yellow) for output state indication
Supply voltage limits	10...30 V DC
Residual current	<= 100 mA (open state)
Protection type	Short-circuit protection
Switching frequency	<= 200 Hz
Voltage drop	< 2.5 V (closed)
Current consumption	< 25 mA
Delay first up	< 100 ms
Delay recovery	< 15 ms
Maximum switching current	400 mA
Marking	CE
Setting-up	Sensitivity by potentiometer
Threaded length	47 mm
Length	78 mm
Product weight	0.075 kg

Environment

standards	EN/IEC 60947-5-2

The information provided in this documentation contains general descriptions and/or technical characteristics of the performance of the products contained herein.
This documentation is not intended as a substitute for and is not to be used for determining suitability or reliability of these products for specific user applications.
It is the duty of any such user or integrator to perform the appropriate and complete risk analysis, evaluation and testing of the products with respect to the relevant specific application or use thereof.
Neither Schneider Electric Industries SAS nor any of its affiliates or subsidiaries shall be responsible or liable for misuse of the information contained herein.

product certifications	CULus
ambient air temperature for operation	-10...60 °C
vibration resistance	10 gn amplitude = 1 mm (10...55 Hz) conforming to IEC 60068-2-6
shock resistance	30 gn (duration = 11 ms) conforming to IEC 60068-2-27
resistance to electrostatic discharge	4 kV (contact) conforming to IEC 61000-4-2 8 kV (air) conforming to IEC 61000-4-2
resistance to electromagnetic fields	3 V/m conforming to IEC 61000-4-3
resistance to fast transients	2 kV conforming to IEC 61000-4-4

Offer Sustainability

Sustainable offer status	Not Green Premium product
RoHS	Compliant - since 0918 - Schneider Electric declaration of conformity

Contractual warranty

Period	18 months

Technical DataSheets

Description :
OPERATOR INTERFACE, MAGELIS GTO, 640 X 480
10.4 IN. TOUCH, COLOR, 24VDC

Trade Name :
Schneider electric

Model no :
HMIGTO5310

Product data sheet
Characteristics

HMIGTO5310
advanced touchscreen panel 640 x 480 pixels
VGA- 10.4" TFT - 96 MB

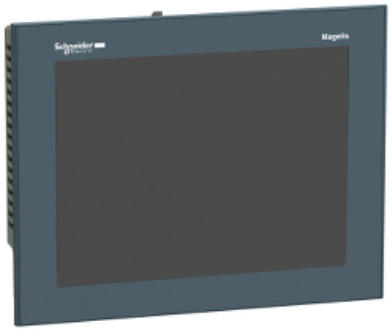

Main

Range of product	Magelis GTO
Product or component type	Advanced touchscreen panel
Display colour	65536 colours
Display size	10.4 inch
Supply	External source
Operating system	Magelis
Battery type	Lithium battery for internal RAM, autonomy: 100 days, charging time = 5 d, battery life = 10 yr

Complementary

Terminal type	Touchscreen display
Display type	Backlit colour TFT LCD
Display resolution	640 x 480 pixels VGA
Touch sensitive zone	1024 x 1024
Touch panel	Resistive film, 1000000 cycles
Backlight lifespan	50000 hours (white) at 25 °C
Brightness	16 levels - control by touch panel 16 levels - control by software
Character font	ASCII Chinese (simplified Chinese) Japanese (ANK, Kanji) Korean Taiwanese (traditional Chinese)
[Us] rated supply voltage	24 V DC
Supply voltage limits	19.2...28.8 V
Inrush current	<= 30 A
Power consumption in W	<= 17 W <= 12 W (when power is not supplied to external devices) <= 7 W (when backlight is OFF) <= 8 W (when backlight is dimmed)
Local signalling	Status LED (orange) flashing software starting up

Disclaimer: This documentation is not intended as a substitute for and is not to be used for determining suitability or reliability of these products for specific user applications

	Status LED (green) steady offline Status LED (green) steady operating Status LED (red) steady power supply (ON) Status LED (clear) faded power supply (OFF) COM2 LED (yellow) steady data is being transmitted COM2 LED (yellow) faded no data transmission SD card LED (green) steady card is inserted SD card LED (green) faded card is not inserted or is not being accessed
Software designation	Vijeo Designer configuration software >= V6.1
Memory description	96 MB flash (EPROM)
Data backed up	512 kB internal RAM (SRAM)
Data storage equipment	SD card <= 32 GB SDHC card <= 32 GB
Downloadable protocols	Modbus Plus Schneider Electric Modicon FIPWAY Schneider Electric Modicon Modbus TCP Schneider Electric Modicon Modbus Schneider Electric Modicon Third party protocols Mitsubishi Melsec Third party protocols Omron Sysmac Third party protocols Rockwell Automation Allen-Bradley Third party protocols Siemens Simatic Uni-TE Schneider Electric Modicon
Integrated connection type	COM1 serial link SUB-D 9, interface: RS232C, transmission rate: 2400...115200 bps COM2 serial link RJ45, interface: RS485, transmission rate: 2400...115200 bps COM2 serial link RJ45, interface: RS485, transmission rate: 187.5 kbps compatible with Siemens MPI Ethernet RJ45, interface: 10BASE-T/100BASE-TX Ethernet RJ45, interface: IEEE 802.3 USB 2.0 type A USB 2.0 type mini B
Product mounting	Flush mounting
Fixing mode	By 4 screw clamps
Front material	PPT
Enclosure material	PPT
Type of cooling	Natural convection
Width	272.5 mm
Height	214.5 mm
Depth	57 mm
Product weight	2 kg

Environment

Standards	EN 61131-2 IEC 61000-6-2 UL 508
Product certifications	CE C-Tick cULus KCC
Ambient air temperature for operation	0...55 °C
Ambient air temperature for storage	-20...60 °C
Relative humidity	10...90 % without condensation
Operating altitude	< 2000 m
IP degree of protection	IP20 rear panel conforming to IEC 60529 IP65 front panel conforming to IEC 60529
NEMA degree of protection	NEMA 4X front panel (indoor use)
Shock resistance	147 m/s² 3 chocks in each direction X, Y and Z conforming to EN/IEC 61131-2
Vibration resistance	3.5 mm (f = 5...9 Hz) conforming to EN/IEC 61131-2 X, Y, Z directions for 10 cycles (approx. 100 min) 1 gn (f = 9...150 Hz) conforming to EN/IEC 61131-2 X, Y, Z directions for 10 cycles (approx. 100 min)
Resistance to electrostatic discharge	6 kV contact discharge conforming to IEC 61000-4-2 level 3

Offer Sustainability

Sustainable offer status	Green Premium product
RoHS (date code: YYWW)	Compliant - since 1348 - Schneider Electric declaration of conformity Schneider Electric declaration of conformity
REACh	Reference contains SVHC above the threshold - Go to CaP for more details Go to CaP for more details
Product environmental profile	Available Product Environmental Profile
Product end of life instructions	Available End of Life Information

Contractual warranty

Warranty period	18 months

Dimensions

External Dimensions

mm
in.

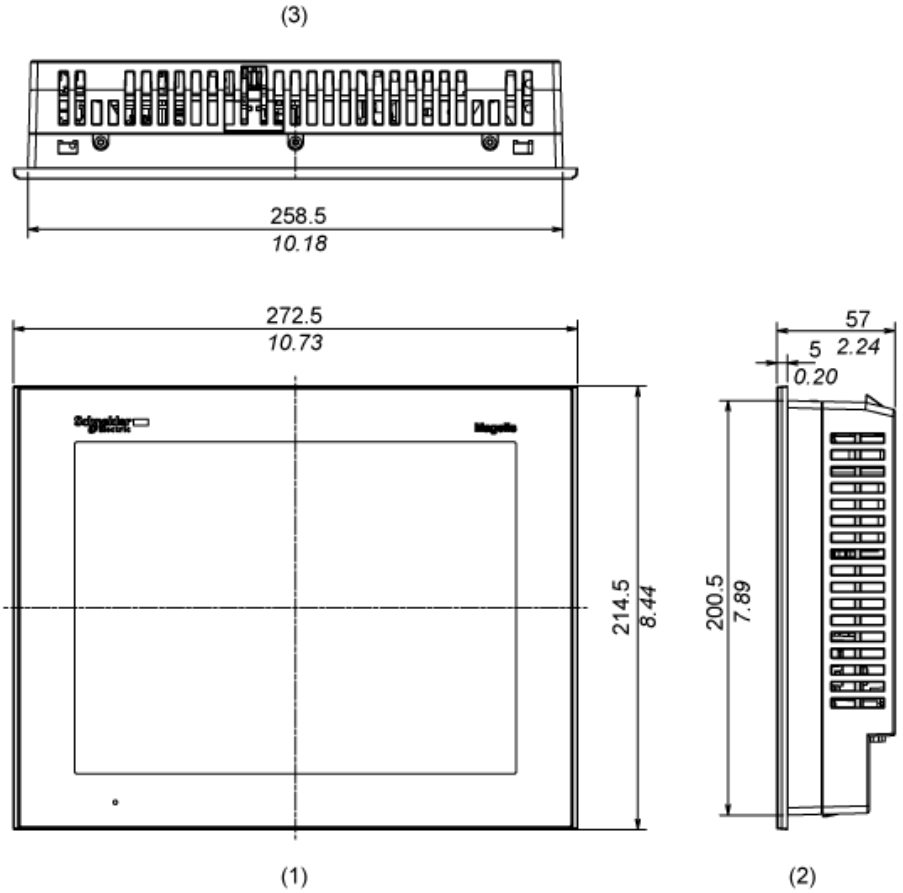

1 Front
2 Right Side
3 Top

Description :
MODICON X80, PLC M580

Trade Name :
Schneider electric

Model no :
BME P58 2020

Product data sheet
Characteristics

BMEP582020
processor module M580 - Level 2 - Distributed

Main

Range of product	Modicon M580
Product or component type	Processor module
Supply	Internal power supply via rack

Complementary

Number of racks	4
Discrete I/O processor capacity	2048 I/O
Analogue I/O processor capacity	512 I/O
Number of application specific channel	72
Application specific I/O	Accurate time stamping Counter Serial link Motion control HART SSI encoder
Checks	Process control
Control channels	Programmable loops
Integrated connection type	USB type mini B 1 Ethernet TCP/IP service port 2 Ethernet TCP/IP device network
Number of distributed equipment	128
Communication module processor capacity	2 Ethernet communication module 8 AS-Interface module
Communication service	DIO scanner
Memory description	Expandable flash 4 GB data storage Integrated RAM 10 kB system memory Integrated RAM 8 MB program Integrated RAM 768 kB data
Application structure	1 cyclic/periodic master task 1 periodic fast task 64 event tasks 2 auxiliary tasks
Number of instructions per ms	7.5 Kinst/ms 65 % Boolean + 35 % fixed arithmetic

Disclaimer: This documentation is not intended as a substitute for and is not to be used for determining suitability or reliability of these products for specific user applications

	10 Kinst/ms 100 % Boolean
Current consumption	270 mA 24 V DC
MTBF reliability	600000 H
Marking	CE
Status LED	1 LED green download in progress (DL) 1 LED red memory card or CPU flash fault (BACKUP) 1 LED green/red ETH MS (Ethernet port configuration status) 1 LED green/red Eth NS (Ethernet network status) 1 LED green processor running (RUN) 1 LED red I/O module fault (I/O) 1 LED red processor or system fault (ERR)
Product weight	1.87 lb(US) (0.849 kg)

Environment

Vibration resistance	3 gn
Shock resistance	30 gn
Ambient air temperature for operation	32...140 °F (0...60 °C)
Ambient air temperature for storage	-40...185 °F (-40...85 °C)
Operating altitude	0...6561.68 ft (0...2000 m) 2000...5000 m (with derating factor)
Relative humidity	5...95 % 55 °C conforming to without condensation
IP degree of protection	IP20
Standards	EN/IEC 61131-2 EN/IEC 61010-2-201 UL 61010-2-201 CSA C22.2 No 61010-2-201
Product certifications	CE CSA UL RCM Merchant Navy EAC

Offer Sustainability

Sustainable offer status	Green Premium product
RoHS (date code: YYWW)	Compliant - since 1623 - Schneider Electric declaration of conformity Schneider Electric declaration of conformity
REACh	Reference not containing SVHC above the threshold Reference not containing SVHC above the threshold
Product environmental profile	Available
Product end of life instructions	Available

BMEP582020

CPU MODULE ONLY

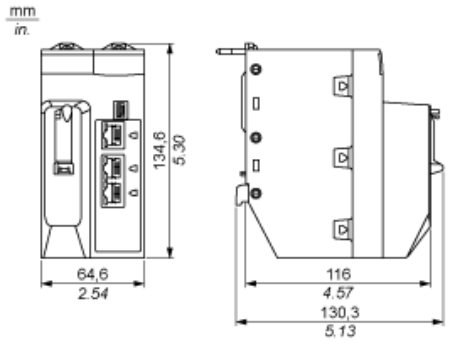

Modules Mounted on Racks

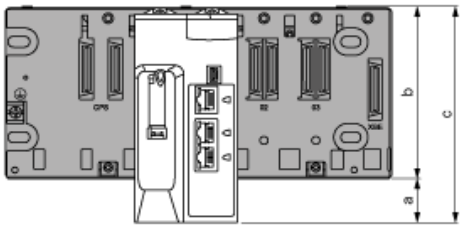

a: additional space below the rack to accommodate the height of the CPU. For an X Bus rack, the value is 30.9 mm (1.217 in.); for an Ethernet rack, the va
b: the height of the rack. For an X Bus rack, the height is 103.7 mm (4.083 in.); for an Ethernet rack, the height is 105.11 mm (4.138 in.).
c: the height of the main local rack, 134.6 mm (5.299 in.)

Modules and Cables Mounted in an Enclosure

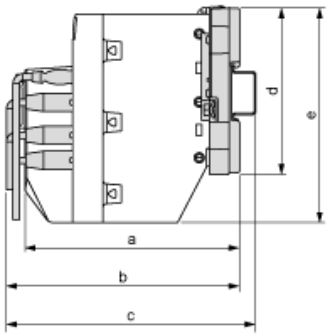

a: enclosure depth: 135 mm (5.315 in.)
b: wiring + module depth: > 146 mm (5.748 in.)
c: wiring + module + DIN rail depth: > 156 mm (6.142 in.)
d: rack height: for an X Bus rack 103.7 mm (4.083 in.); for an Ethernet rack, 105.11 mm (4.138 in.)
e: module height: 134.6 mm (5.299 in.)

Technical DataSheets

Description :
MODICON X80, ANALOG INPUT MODULE 8PT

Trade Name :
Schneider electric

Model no :
BMX AMI 0810

Chapter 5
BMX AMI 0810 Analog Input Module

Subject of this Chapter

This chapter presents the BMX AMI 0810 module, its characteristics, and explains how it is connected to the various sensors.

What Is in This Chapter?

This chapter contains the following topics:

Topic	Page
Presentation	96
Characteristics	97
Functional Description	99
Wiring Precautions	106
Wiring Diagram	110
Use of the TELEFAST ABE-7CPA02/31/31E Wiring Accessory	112

Presentation

Function

The BMX AMI 0810 is a high density input analog module with 8 isolated channels.

This module is used in conjunction with sensors or transmitters; it performs monitoring, measurement, and continuous process control functions.

The BMX AMI 0810 module offers the following range for each input according to the selection made during configuration:

- Voltage +/-5 V/+/-10 V/0..5 V/0..10 V/1..5 V
- Current +/-20 mA/0..20 mA/4..20 mA

The module operates with voltage inputs. It includes eight read resistors connected to the terminal block to perform current inputs.

Illustration

The following graphic shows the BMX AMI 0810 analog input module:

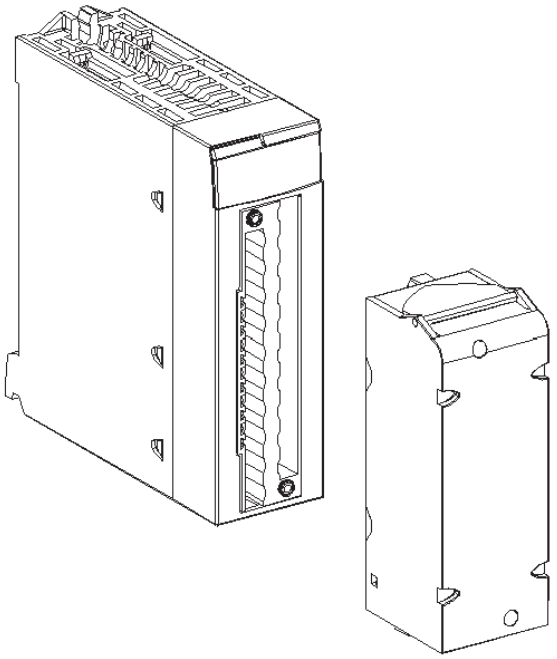

NOTE: The terminal block is supplied separately.

Characteristics

General Characteristics

The general characteristics for the BMX AMI 0810 and BMX AMI 0810H *(see page 49)* modules are as follows:

Type of inputs		High level isolated fast inputs
Nature of inputs		Voltage / Current
Number of channels		8
Acquisition cycle time:		
• Fast (periodic acquisition for the declared channels used)		1 ms + 1 ms x number of channels used
• Default (periodic acquisition for all channels)		9 ms
Display resolution		16-bit
Digital filtering		First order
Isolation: • Between channels • Between channels and bus • Between channels and ground		 +/-300 VDC 1400 VDC 1400 VDC
Maximum overload authorized for inputs:		Voltage inputs: +/- 30 VDC Current inputs: +/- 30 mA Protected against accidental wiring: -19.2 to 30VDC **NOTE:** The **Protected for accidental wiring** function is not supported when the module works with any Telefast interface.
Power consumption (3.3 V)	**Typical**	0.32 W
	Maximum	0.48 W
Power consumption (24 V)	**Typical**	0.82 W
	Maximum	1.30 W

Measurement Range

The BMX AMI 0810 and BMX AMI 0810H *(see page 49)* analog inputs have the following measurement range characteristics:

Measurement range	**+/-10 V; +/-5 V; 0..10 V; 0..5 V; 1..5 V**	**+/-20 mA; 0..20 mA; 4..20 mA**
Maximum conversion value	+/-11.4 V	+/-30 mA
Conversion resolution	0.36 mV	1.4 µA
Input impedance	10 MΩ	Internal conversion resistor (250 Ω) + Internal protection resistor (see note)
Precision of the internal conversion resistor	-	0.1% - 15 ppm/°C
Measurement errors for standard module:		
• At 25°C • Maximum in the temperature range 0...60°C (32...140°F)	0.075% of FS (1) 0.1% of FS (1)	Typical 0.15% of FS (1)(2) 0.3% of FS (1)(2)
Measurement errors for Hardened module:		
• At 25°C • Maximum in the temperature range -25...70°C (-13...158°F)	0.075% of FS (1) 0.2% of FS (1)	Typical 0.15% of FS (1)(2) 0.55% of FS (1)(2)
Temperature drift	30 ppm/°C	50 ppm/°C
Monotonicity	Yes	Yes
Crosstalk between channels DC and AC 50/60Hz	> 80dB	> 80dB
Non-linearity	0.001%	0.001%
Repeatability @25°C of 10 min. stabilization time	0.005% of FS	0.007% of FS
Long term stability after 1000 hours	< 0.004% of FS	< 0.004% of FS
Legend: (1) FS: Full Scale (2) With conversion resistor error		

NOTE: The internal protection resistor has a typical impedance of 25 Ω (min 3.6 Ω and max 50 Ω),The precision of the protection resistor does not impact the measured value.

NOTE: If nothing is connected on a BMX AMI 0810 and BMX AMI 0810H *(see page 49)* analog module and if channels are configured (range 4..20 mA or 1..5 V), there is a detected I/O error as if a wire is broken.

Functional Description

Function

The BMX AMI 0810 is a high density input analog module with 8 isolated channels.

This module is used in conjunction with sensors or transmitters; it performs monitoring, measurement, and continuous process control functions.

The BMX AMI 0810 module offers the following range for each input according to the selection made during configuration:

- +/-10 V
- 0..10 V
- 0..5 V / 0..20 mA
- 1..5 V / 4..20 mA
- +/-5 V / +/-20 mA

The module operates with voltage inputs. It includes eight read resistors connected to the terminal block to perform current inputs.

Illustration

The BMX AMI 0810 illustration:

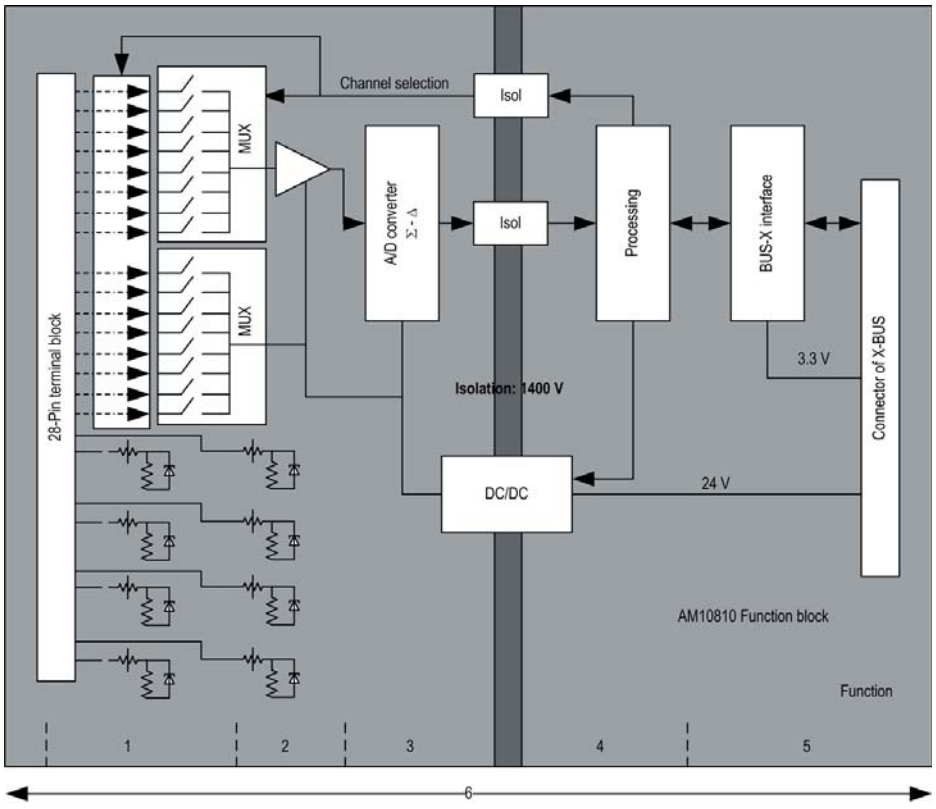

Description:

No.	Process	Function
1	**Adapting the Inputs and Multiplexing**	• Physical connection to the process through a 28-pin screw terminal block • Protection of the module against overvoltages • Protection of the current reading resistors using limiters and resettable fuses • Input signal analog filtering • Scan input channels using static multiplexing through opto-switches, in order to provide the possibility of common mode voltage of +/- 300 Vdc
2	**Amplifying Input Signals**	• Gain selecting , based on characteristics of input signals, as defined during configuration (unipolar or bipolar range, in voltage or current) • Compensation of drift in amplifier device
3	**Converting**	• Conversion of analog Input signal into digital 24-bit signal using a ΣΔ converter
4	**Transforming incoming values into workable measurements for the user.**	• Takes into account recalibration and alignment coefficients to be applied to measurements and the module's self-calibration coefficients • (Numeric) filtering fo measurements, based on configuration parameters • Scaling of measurements, based on configuration parameters
5	**Communicating with the Application**	• Manages exchanges with CPU • Topological addressing • Receives configuration parameters from module and channels • Sends measured values, as well as module status, to application
6	**Module monitoring and sending error notification back to application.**	Conversion string test Testing for range overflow on channels Watchdog test

Measurement Timing

The timing of measurements is determined by the cycle selected during configuration (Normal or Fast Cycle):

- Normal Cycle means that the scan cycle duration is fixed.
- With the Fast Cycle, however, the system only scans the channels designated as being In Use. The scan cycle duration is therefore proportional to the number of channels In Use.

The cycle time values are based on the cycle selected:

Module	Normal Cycle	Fast Cycle
BMX AMI 0810	9 ms	1 ms + (1 ms x N) where N: number of channels in use.

NOTE: Module cycle is not synchronized with the PLC cycle. At the beginning of each PLC cycle, each channel value is taken into account. If the MAST/FAST task cycle time is less than the module's cycle time, some values will not have changed.

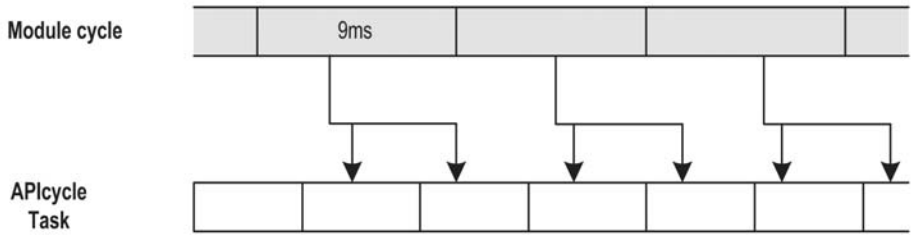

Overflow/Underflow Control

Module BMX AMI 0810 allows the user to select between 6 voltage or current ranges for each input.

This option for each channel have to be configured in configuration windows. Upper and lower tolerance detection are always active regardless of overflow/underflow control.

Depending on the range selected the module checks for overflow, it verifies that the measurement falls between a lower and an upper threshold:

Description:

Designation	Description
Nominal range	measurement range corresponding to the chosen range
Upper Tolerance Area	varies between the values included between the maximum value for the range (for instance: +10 V for the +/-10 V range) and the upper threshold
Lower Tolerance Area	varies between the values included between the minimum value for the range (for instance: -10 V for the +/-10 V range) and the lower threshold
Overflow Area	area located beyond the upper threshold
Underflow Area	area located below the lower threshold

The values of the thresholds are configurable independently from one another. They may assume integer values between the following limits:

Range	BMX AMI 0810 Range									
	Underflow Area		Lower Tolerance Area		Nominal Range		Upper Tolerance Area		Overflow Area	
Unipolar										
0...10 V	-1,500	-1,001	-1,000	-1	0	10,000	10,001	11,000	11,001	11,400
0...5 V / 0...20 mA	-5,000	-1,001	-1,000	-1	0	10,000	10,001	11,000	11,001	15,000
1...5 V / 4...20 mA	-4,000	-801	-800	-1	0	10,000	10,001	10,800	10,801	14,000
Bipolar										
+/- 10 V	-11,500	-11,001	-11,000	-10,001	-10,000	10,000	10,001	11,000	11,001	11,400
+/- 5 V, +/- 20 mA	-15,000	-11,001	-11,000	-10,001	-10,000	10,000	10,001	11,000	11,001	15,000
User										
+/- 10 V	-32,768				User-defined	User-defined				32,767
0...10 V	-32,768				User-defined	User-defined				32,767

Measurement Display

Measurements may be displayed using standardized display (in %, to two decimal places):

Type of Range	Display
Unipolar range 0...10 V, 0...5 V, 1...5 V, 0...20mA, 4...20mA	from 0 to 10,000 (0 % at +100.00 %)
Bipolar range +/- 10 V, +/- 5 mV +/- 20 mA	from -10,000 to 10,000 (-100.00 % at +100.00 %)

It is also possible to define the range of values within which measurements are expressed, by selecting:

- the lower threshold corresponding to the minimum value for the range: 0 % (or -100.00 %).
- the upper threshold corresponding to the maximum value for the range (+100.00 %).

The lower and upper thresholds must be integers between -32,768 and +32,767.

For example, imagine a conditioner providing pressure data on a 4-20 mA loop, with 4 mA corresponding to 3,200 millibar and 20 mA corresponding to 9,600 millibar. You have the option of choosing the User format, by setting the following lower and upper thresholds:

3,200 for 3,200 millibar as the lower threshold

9,600 for 9,600 millibar as the upper threshold

Values transmitted to the program vary between 3,200 (= 4 mA) and 9,600 (= 20 mA).

Measurement Filtering

The type of filtering performed by the system is called "first order filtering". The filtering coefficient can be modified from a programming console or via the program.

The mathematical formula used is as follows:

$$Meas_{f(n)} = \alpha \times Meas_{f(n-1)} + (1-\alpha) \times Val_{b(n)}$$

where:

α = efficiency of the filter

$Meas_{f(n)}$ = measurement filtered at moment n

$Meas_{f(n-1)}$ = measurement filtered at moment n-1

$Val_{b(n)}$ = gross value at moment n

You may configure the filtering value from 7 possibilities (from 0 to 6). This value may be changed even when the application is in RUN mode.

NOTE: Filtering may be accessed in Normal or Fast Cycle.

The filtering values depend on the T configuration cycle (where T = cycle time of 5 ms in standard mode):

Desired Efficiency	Required Value	Corresponding α	Filter Response Time at 63%	Cut-off Frequency (in Hz)
No filtering	0	0	0	0
Low filtering	1 2	0.750 0.875	4 x T 8 x T	0.040 / T 0.020 / T
Medium filtering	3 4	0.937 0.969	16 x T 32 x T	0.010 / T 0.005 / T
High filtering	5 6	0.984 0.992	64 x T 128 x T	0.0025 / T 0.0012 / T

Sensor Alignment

The process of "alignment" consists in eliminating a systematic offset observed with a given sensor, around a specific operating point. This operation compensates for an error linked to the process. Replacing a module does not therefore require a new alignment. However, replacing the sensor or changing the sensor's operating point does require a new alignment.

Conversion lines are as follows:

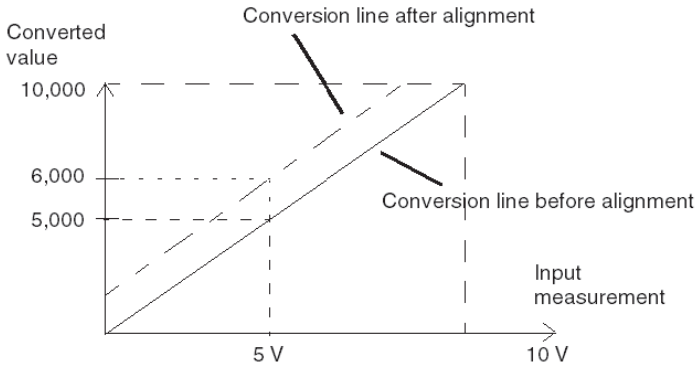

The alignment value is editable from a programming console, even if the program is in RUN Mode. For each input channel, you can:

- view and modify the desired measurement value
- save the alignment value
- determine whether the channel already has an alignment

The alignment offset may also be modified through programming.

Channel alignment is performed on the channel in standard operating mode, without any effect on the channel's operating modes.

The maximum offset between measured value and desired (aligned) value may not exceed +/- 1.500.

NOTE: To align several analog channels on the BMX ART/AMO/AMI/AMM modules, we recommand proceeding channel by channel. Test each channel after alignment before moving to the next channel in order to apply the parameters correctly.

Wiring Precautions

Introduction

In order to protect the signal from outside interference induced in series mode and interference in common mode, we recommend that you take the following precautions.

Cable Shielding

Connect the cable shielding to the grounding bar. Clamp the shielding to the grounding bar on the module side. Use the shielding connection kit BMXXSP•••• *(see page 45)* to connect the shielding.

⚠ DANGER

HAZARD OF ELECTRIC SHOCK, EXPLOSION, OR ARC FLASH

While mounting / removing the modules:

- make sure that each terminal block is still connected to the shield bar and
- disconnect voltage supplying sensors and pre-actuators.

Failure to follow these instructions will result in death or serious injury.

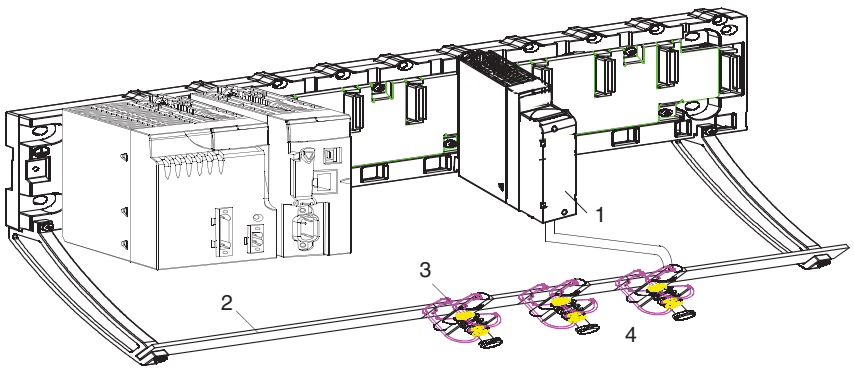

1 BMX AMI 0810
2 Shield bar
3 Clamp
4 To sensors

Example of TELEFAST Connection

Connect the sensor cable shielding to the terminals provided and the whole assembly to the cabinet ground.

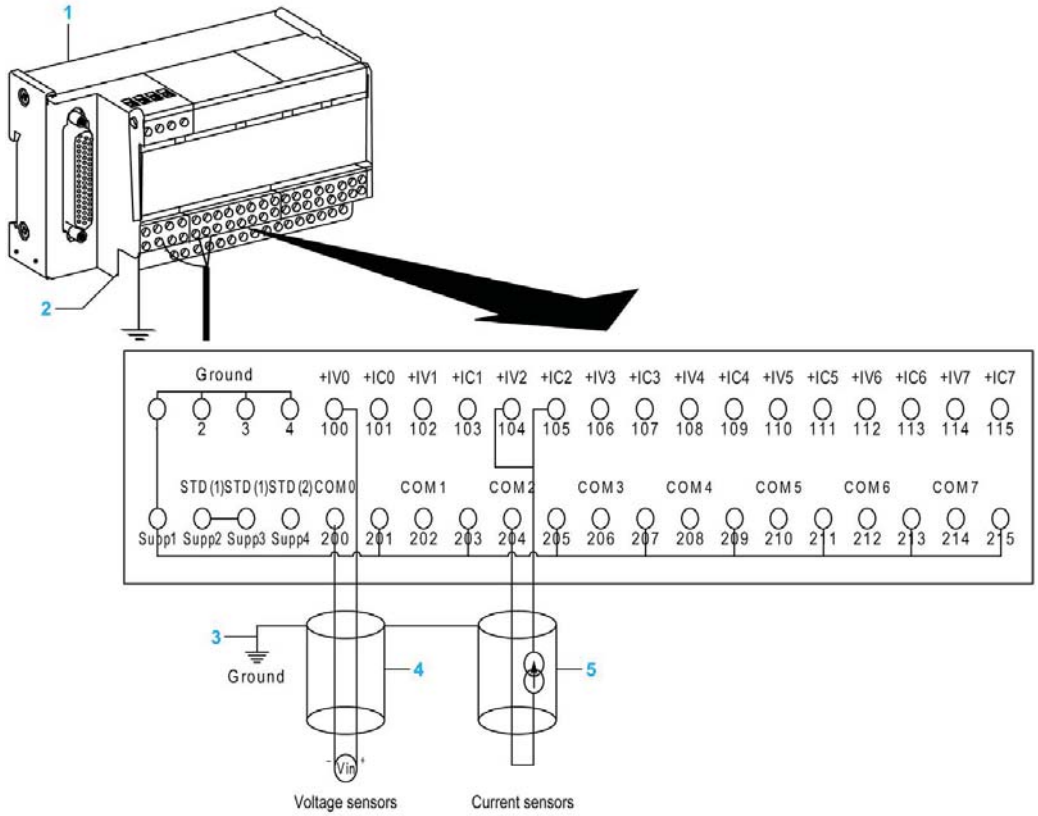

1 Telefast ABE-7CPA02
2 The grounding of cables is facilited using the ABE-7BV10 accessory
3 Shield wiring to the ground
4 To voltage sensors
5 To current sensors

Reference of Sensors in Relation to the Ground

In order for the acquisition system to operate correctly, it is recommended to take in account the following precautions:

- sensors must be close together (a few meters)
- all sensors must be referenced to a single point, which is connected to the PLC's ground

Using the Sensors Referenced in Relation to the Ground

The sensors are connected as indicated in the following diagram:

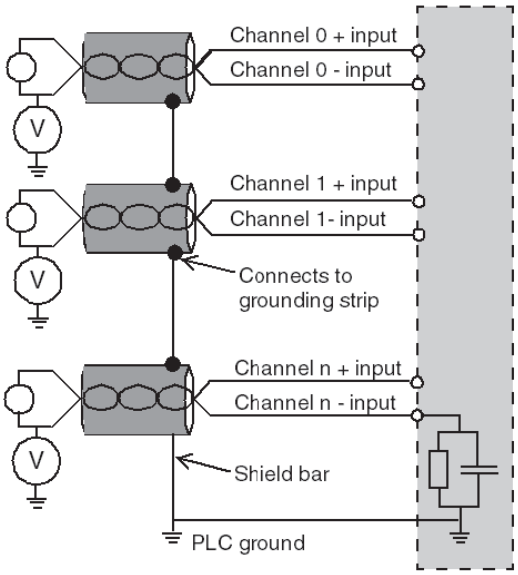

If the sensors are referenced in relation to the ground, this may in some cases return a remote ground potential to the terminal block. It is therefore **essential** to follow the following rules:

- The potential must be less than the permitted low voltage: for example, 30 Vrms or 42.4 VDC.
- Setting a sensor point to a reference potential generates a leakage current. You must therefore check that all leakage currents generated do not disturb the system.

NOTE: Sensors and other peripherals may be connected to a grounding point some distance from the module. Such remote ground references may carry considerable potential differences with respect to local ground. Induced currents do not affect the measurement or integrity of the system.

⚠ DANGER

HAZARD OF ELECTRIC SHOCK

Ensure that sensors and others peripherals are not exposed through grounding points to voltage potential greater than acceptable limits.

Failure to follow these instructions will result in death or serious injury.

Description :
MODICON X80, ANALOG OUTPUT MODULE 8PT

Trade Name :
Schneider electric

Model no :
BMX AMO 0802

BMX AMO 0802

Presentation

Function

The BMX AMO 0802 is a high density output analog module fitted with 8 non-isolated channels. It offers the following current ranges for each output:

- 0..20 mA
- 4..20 mA

The range is selected during configuration.

Illustration

The following graphic shows the BMX AMO 0802 analog output module:

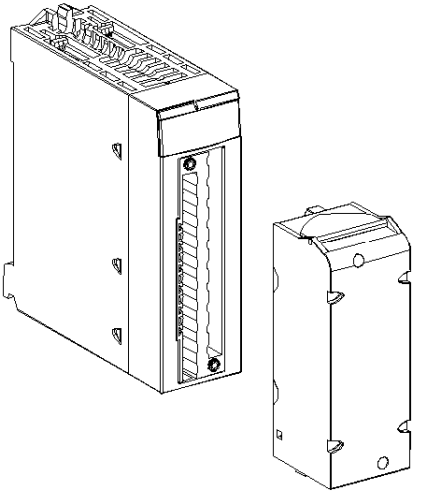

NOTE: The terminal block is supplied separately.

Characteristics

General Characteristics

The general characteristics for the BMX AMO 0802 and BMX AMO 0802H *(see page 35)* modules are as follows:

Type of outputs		Non-isolated high level outputs with common point
Nature of outputs		Current
Number of channels		8
Digital/Analog converter resolution		16 bits
Output refresh time		4 ms
Power supply for outputs		by the module
Types of protection		Outputs protected to short circuits and permanent overloads
Isolation:		
• Between channels		Non-isolated
• Between channels and bus		1400 VDC
• Between channels and ground		1400 VDC
Measurement error for standard module:		
• At 25° C (77° F)		0.10% of FS (1)
• Maximum in the temperature range 0..60° C (32..140° F)		0.25% of FS (1)
Measurement error for ruggedized:		
• At 25° C (77° F)		0.10% of FS (1)
• Maximum in the temperature range -25..70° C (-13..158° F)		0.45% of FS (1)
Temperature drift		45 ppm/° C
Monotonicity		Yes
Non linearity		0.1% of FS
AC output ripple		2 mV rms on 50 Ω
Power consumption (3.3 V)	**Typical**	0.35 W
	Maximum	0.48 W
Power consumption (24 V)	**Typical**	3.40 W
	Maximum	3.70 W
Legend		
(1) FS: Full Scale		

Current Output

The BMX AMO 0802 and BMX AMO 0802H *(see page 35)* current outputs have the following characteristics:

Nominal variation range	0..20 mA, 4..20 mA
Available maximum current	21 mA
Analog resolution	0.74 µA
Load impedance	350 Ω maximum
Detection type	Open circuit (1)
Legend (1) The open circuit detection is physically detected by the module if the target current value is different from 0 mA.	

Response time of Outputs

The maximum delay between transmission of the output value on the PLC bus and its effective positioning on the terminal block is less than 5 ms:

- Internal cycle time = 4 ms for the eight channels
- Digital/Analog conversion response time = 1 ms maximum for a 0-100% step.

NOTE: If nothing is connected on the BMX AMO 0802 analog module and the channels are configured in the range 4..20 mA, there is a detected I/O error as if a wire is broken.

For the 0..20 mA range, there is a detected I/O error as if a wire is broken only when the current is greater than 0 mA.

⚠ CAUTION

RISK OF INCORRECT DATA

If a signal wire is broken or disconnected, the last measured value is kept.

- Ensure that this does not cause a hazardous situation.
- Do not rely on the value reported. Check the input value at the sensor.

Failure to follow these instructions can result in injury or equipment damage.

Functional Description

Function

The BMX AMO 0802 is a high density output analog module fitted with 8 non-isolated channels. It offers the following current ranges for each output:

- 0..20 mA
- 4..20 mA

The range is selected during configuration.

Illustration

The BMX AMO 0802 module's illustration is as follows:

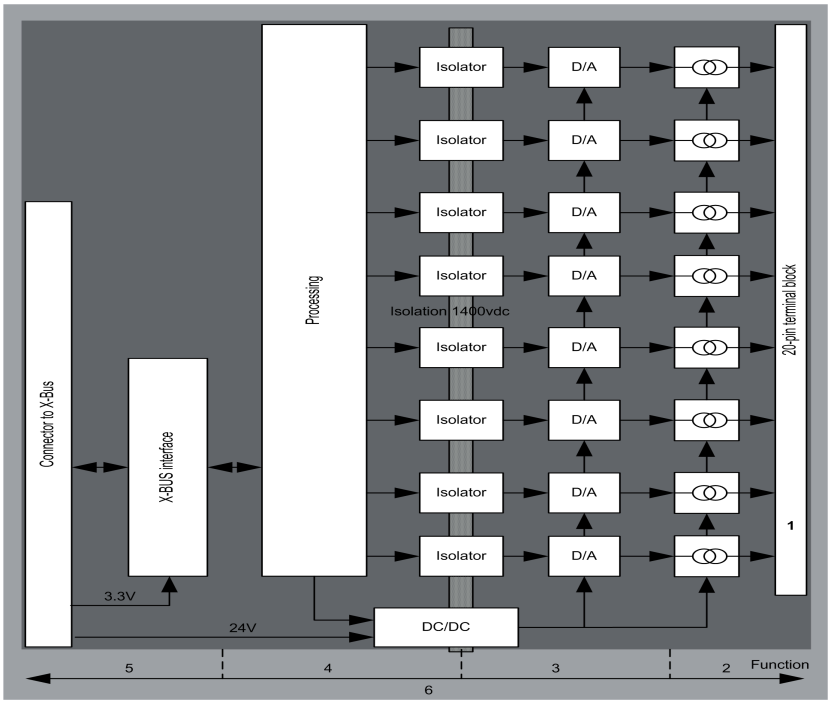

Description:

Address	Process	Characteristics
1	Adapting the outputs	• physical connection to the process through a 20-pin screw terminal block • protecting the module against voltage spikes
2	Adapting the signal to the Actuators	• the adaptation is performed on current via software configuration
3	Converting	• this conversion is performed on 15 bits with a polarity sign • reframing the data provided by the program is performed automatically and dynamically by the converter
4	Transforming application data into data directly usable by the digital/analog converter	• use of factory calibration parameters
5	Communicating with the Application	• manages exchanges with CPU • topological addressing • from the application, receiving the configuration parameters for the module and channels as well as numeric set points from the channels • sending module status back to application
6	Module monitoring and sending error notifications back to the application	• output power supply test • testing for range overflow on channels • testing for output open circuits and short-circuits • watchdog test • Programmable fallback capabilities

Writing Outputs

The application must provide the outputs with values in the standardized format: 0 to +10,000 in 0..20 mV and 4..20 mA ranges.

Digital/Analog Conversion

The digital/analog conversion is performed on: 15-bit in 0..20 mA and 4..20 mA ranges.

Overflow Control

Module BMX AMO 0802 only allows an overflow control on current ranges.

The measurement range is divided in three areas:

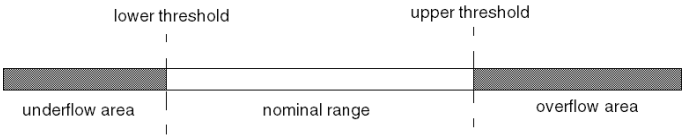

Description:

Designation	Description
Nominal range	measurement range corresponding to the chosen range
Overflow Area	area located beyond the upper threshold
Underflow Area	area located below the lower threshold

Overflow values for the various ranges are as follows:

Range	BMX AMO 0802					
	Underflow Area		Nominal Range		Overflow Area	
0..20mA	-2,000	-1,001	-1,000	10,300	10,301	10,500
4..20mA	-1,600	-801	-800	10,300	10,301	10,500

You may also choose the flag for an overflow of the range upper value, for an underflow of the range lower value, or for both.

NOTE: Range under/overflow detection is optional.

Fallback/Maintain or Reset Outputs to Zero

If an error is detected, and depending on its seriousness, the outputs:
- switch to Fallback/Maintain position individually or together,
- are forced to 0 mA.

Various Behaviors of Outputs:

Error	Behavior of Outputs
Task in STOP mode, or program missing	Fallback/Maintain (channel by channel)
Communication interruption	
Configuration Error	0 mA (all channels)
Internal Error in Module	
Output Value out-of-range (range under/overflow)	Saturated value (channel by channel)
Output open circuit	Maintain (channel by channel)
Module Hot swapping (processor in STOP mode)	0 mA (all channels)
Reloading Program	

Fallback or Maintain at current value is selected during the configuration of the module. The fallback value may be modified from the Debug in Unity Pro or through a program.

⚠ WARNING

UNEXPECTED EQUIPMENT OPERATION

The fallback position should not be used as the sole safety method. If an uncontrolled position can result in a hazard, an independent redundant system must be installed.

Failure to follow these instructions can result in death, serious injury, or equipment damage.

Behavior at Initial Power-Up and When Switched Off.

When the module is switched on or off, the outputs are set to 0 mA.

Actuator Alignment

The process of "alignment" consists in eliminating a systematic offset observed with a given actuator, around a specific operating point. This operation compensates for an error linked to the process. Therefore, replacing a module does not require a new alignment. However, replacing the actuator or changing the sensor's operating point does require a new alignment.

Conversion lines are as follows:

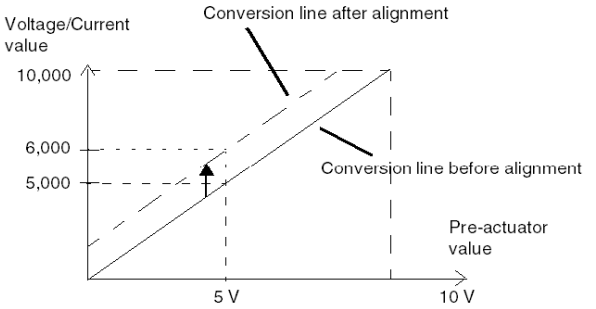

The alignment value is editable from a programming console, even if the program is in RUN Mode. For each output channel, you can:

- view and modify the initial output target value
- save the alignment value
- determine whether the channel already has an alignment

The maximum offset between the measured value and the corrected output value (aligned value) may not exceed +/- 1.500.

NOTE: To align several analog channels on the BMX AMO/AMI/AMM/ART modules, we recommend proceeding channel by channel. Test each channel after alignment before moving to the next channel in order to apply the parameters correctly.

Technical DataSheets

Description :
MODICON X80, POWER SUPPLY 24VDC, 36W

Trade Name :
Schneider electric

Model no :
BMX CPS 3500

Product data sheet
Characteristics

BMXCPS3500
power supply module X80 - 100..240 V AC - 36 W

Main

Range of product	Modicon X80
Product or component type	Power supply module
Product compatibility	Not compatible with BMEXBP..02
Primary voltage	100...240 V
Supply circuit type	AC
Total useful secondary power	<= 36 W
Secondary power	15 W 3.3 V DC I/O module logic power supply 21.6 W 24 V DC sensor power supply 31.2 W 24 V DC I/O module power supply and processor

Complementary

Primary voltage limit	85...264 V
Network frequency	50/60 Hz
Network frequency limits	47...63 Hz
Apparent power	0.07 kVA
Power supply input current	0.52 A 240 V 1.04 A 115 V
Inrush current	<= 30 A 120 V <= 60 A 240 V
I²t on activation	<= 1 A².s 120 V <= 3 A².s 240 V
It on activation	<= 0.05 A.s 120 V <= 0.07 A.s 240 V
Protection type	Internal fuse not accessible primary circuit Overload protection secondary circuit Overvoltage protection secondary circuit Short-circuit protection secondary circuit
Current at secondary voltage	0.9 A 24 V DC sensor power supply 1.3 A 24 V DC I/O module power supply and processor 4.5 A 3.3 V DC I/O module logic power supply
Power dissipation in W	<= 8.5 W
Status LED	1 LED green rack voltage OK

Disclaimer: This documentation is not intended as a substitute for and is not to be used for determining suitability or reliability of these products for specific user applications

	1 LED green sensor voltage
Control type	RESET push-button cold restart
Electrical connection	1 connector 2 pin(s) alarm relay 1 connector 5 pin(s) line supply, protective earth, 24 V DC input sensor
Insulation resistance	>= 100 MOhm primary/ground >= 100 MOhm primary/secondary
Product weight	0.36 kg

Environment

Immunity to microbreaks	<= 1 ms
Dielectric strength	1500 V primary/ground 1500 V primary/secondary I/O module logic power supply 1500 V primary/secondary I/O module power supply and processor 2300 V primary/secondary sensor power supply 500 V 24 V sensor output/ground
Vibration resistance	3 gn
Shock resistance	30 gn
IP degree of protection	IP20
Product certifications	CE CSA UL RCM Merchant Navy EAC
Standards	EN/IEC 61131-2 EN/IEC 61010-2-201 UL 61010-2-201 CSA C22.2 No 61010-2-201
Ambient air temperature for storage	-40...85 °C
Ambient air temperature for operation	0...60 °C
Relative humidity	5...95 % without condensation
Protective treatment	TC
Operating altitude	0...2000 m 2000...5000 m (with derating factor)

Offer Sustainability

Sustainable offer status	Green Premium product
RoHS (date code: YYWW)	Compliant - since 0722 - Schneider Electric declaration of conformity Schneider Electric declaration of conformity
REACh	Reference not containing SVHC above the threshold Reference not containing SVHC above the threshold
Product environmental profile	Available Product environmental
Product end of life instructions	Available End of life manual

Contractual warranty

Warranty period	18 months

Technical DataSheets

Description :
MODICON X80, 24VDC DISCRETE IN MODULE 32PT

Trade Name :
Schneider electric

Model no :
BMX DDI 3202K

Product data sheet
Characteristics

BMXDDI3202K
discrete input module M340 - 32 inputs - 24 V DC positive

Main

Range of product	Modicon M340 automation platform
Product or component type	Discrete input module
Electrical connection	40-way connector
Discrete input number	32
Discrete input type	Isolated
Input type	Current sink (logic positive)
Discrete input voltage	24 V DC positive
Discrete input current	2.5 mA
Input compatibility	With 2-wire/3-wire proximity sensors conforming to IEC 60947-5-2

Complementary

Sensor power supply	19...30 V
Voltage state 1 guaranteed	>= 11 V
Current state 1 guaranteed	>= 2 mA
Voltage state 0 guaranteed	<= 5 V
Current state 0 guaranteed	<= 1.5 mA
Input impedance	9600 Ohm
Insulation resistance	> 10 MOhm 500 V DC
Power dissipation in W	<= 3.9 W
DC typical filtering time	4 ms
DC maximum filtering time	7 ms
Paralleling of inputs	No
Typical current consumption	140 mA 3.3 V DC
MTBF reliability	696320 H
Protection type	1 external fuse per group of channel 0.5 A fast blow Reverse polarity protection
Voltage detection threshold	> 18 V DC sensor OK < 14 V DC sensor fault
Status LED	1 LED red module I/O 1 LED red module error (ERR) 1 LED per channel green channel diagnostic 1 LED green module operating (RUN)
Product weight	0.112 kg

Environment

IP degree of protection	IP20
Standards	CSA 22-2 No 142 IEC 1131-2 IEC 664 NF C 63-850 UL 508 UL 746C
Dielectric strength	500 V DC 1 minute, between group of channels 1500 V AC at 50/60 Hz 1 minute, primary/secondary
Ambient air temperature for operation	0...60 °C
Relative humidity	10...95 % without condensation
Protective treatment	TC

The information provided in this documentation contains general descriptions and/or technical characteristics of the performance of the products contained herein.
This documentation is not intended as a substitute for and is not to be used for determining suitability or reliability of these products for specific user applications.
It is the duty of any such user or integrator to perform the appropriate and complete risk analysis, evaluation and testing of the products with respect to the relevant specific application or use thereof.
Neither Schneider Electric Industries SAS nor any of its affiliates or subsidiaries shall be responsible or liable for misuse of the information contained herein.

Modules Mounted on Racks

Dimensions

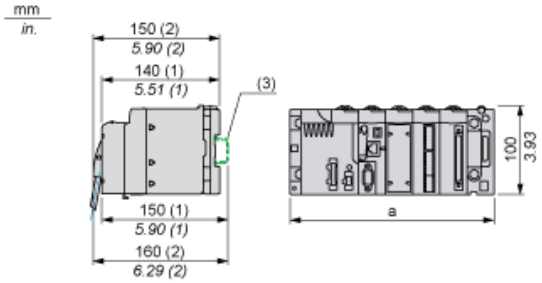

(1) With removable terminal block (cage, screw or spring).
(2) With FCN connector.
(3) On AM1 ED rail: 35 mm wide, 15 mm deep. Only possible with BMXXBP0400/0400H/0600/0600H/0800/0800H rack.

Rack references	a in mm	a in in.
BMXXBP0400 and BMXXBP0400H	242.4	09.54
BMXXBP0600 and BMXXBP0600H	307.6	12.11
BMXXBP0800 and BMXXBP0800H	372.8	14.68
BMXXBP1200 and BMXXBP1200H	503.2	19.81

Connecting the Module

Input Circuit Diagram

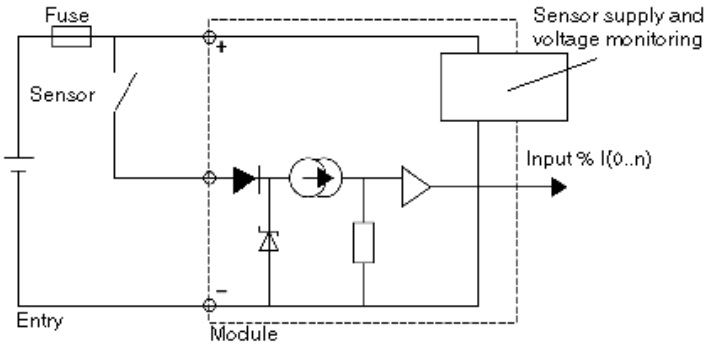

Module Connection

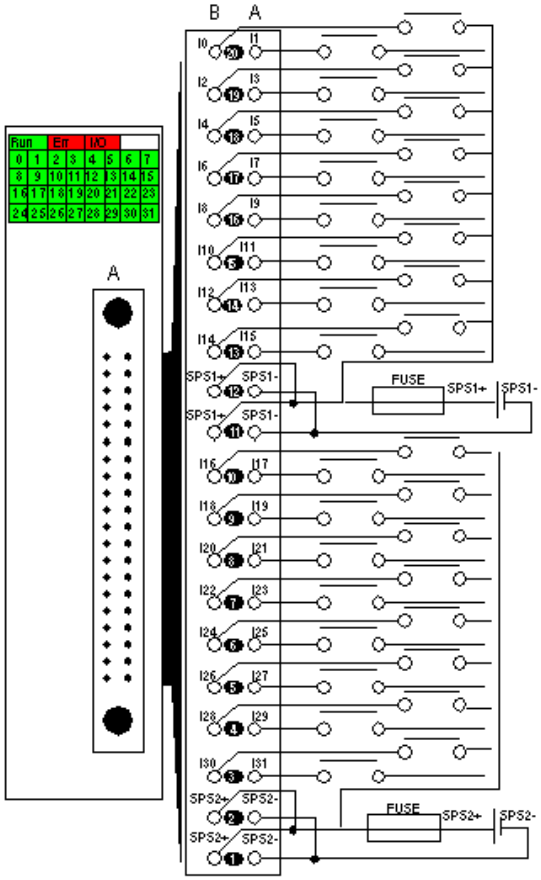

power 24 VDC supply
fuse fast blow fuse of 0.5 A for each 16-channel group
SPS sensor power supply

Technical DataSheets

Description :
MODICON X80, 24VDC DISCRETE OUT MODULE 16PT

Trade Name :
Schneider electric

Model no :
BMX DDO 1602

Product data sheet
Characteristics

BMXDDO1602
discrete output module M340 - 16 outputs - solid state - 24 V DC positive

Main

Range of product	Modicon M340 automation platform
Product or component type	Discrete output module
Discrete output number	16 EN/IEC 61131-2
Discrete output type	Solid state
Discrete output voltage	24 V 19...30 V DC
Ambient air temperature for operation	0...60 °C
Protective treatment	TC

Complementary

Electrical connection	20-way connector
Discrete output logic	Positive
Discrete output current	0,5 A
Output compatibility	IEC 61131-2 type 3 DC input Not IEC 61131-2 DC input
Current per channel	≤ 0,625 A
Current per module	≤ 10 A
Leakage current	≤ 0,5 mA at state 0
[Ures] residual voltage	≤ 1,2 V at state 1
Insulation resistance	> 10 MOhm 500 V DC
Power dissipation in W	≤ 4 W
Response time on output	1,2 ms
Paralleling of outputs	Yes : 2 maximum
MTBF reliability	409413 h
Protection type	External short-circuit protection Overload protection Overvoltage protection Reverse polarity protection
Output overload protection	With current limiter With electronic circuit breaker 1.5 In < Id < 2 In
Output overvoltage protection	With transil diode
Output short-circuit protection	With 2 A external fuse
Reverse polarity protection	Reverse mounted diode
Voltage detection threshold	< 14 V DC preactuator fault > 18 V DC preactuator at state 0
Tungsten load	≤ 6 W
Switching frequency	0.5/LI² Hz
Load impedance ohmic	≤ 48 Ohm
Status LED	1 LED green module operating (RUN) 1 LED red module error (ERR) 1 LED red module I/O 1 LED per channel green channel diagnostic
Product weight	0,12 kg

The information provided in this documentation contains general descriptions and/or technical characteristics of the performance of the products contained herein.
This documentation is not intended as a substitute for and is not to be used for determining suitability or reliability of these products for specific user applications.
It is the duty of any such user or integrator to perform the appropriate and complete risk analysis, evaluation and testing of the products with respect to the relevant specific application or use thereof.
Neither Schneider Electric Industries SAS nor any of its affiliates or subsidiaries shall be responsible or liable for misuse of the information contained herein.

Environment

IP degree of protection	IP20
Standards	CSA 22-2 No 142 IEC 1131-2 IEC 664 NF C 63-850 UL 508 UL 746C
Dielectric strength	1500 V AC 50/60 Hz 1 minute, output/ground 1500 V AC 50/60 Hz 1 minute, output/internal logic
Relative humidity	10...95 % without condensation
RoHS EUR conformity date	0722
RoHS EUR status	Compliant

Technical DataSheets

Description :
MODICON X80, RACK, 12 SLOTS

Trade Name :
Schneider electric

Model no :
BMX XBP 1200

Product data sheet
Characteristics

BMXXBP1200
rack M340 -12 slots - panel or plate mounting

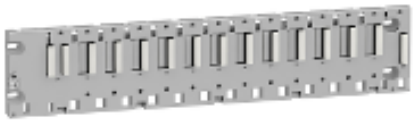

Main

Range of product	Modicon M340 automation platform
Accessory / separate part type	Rack

Complementary

Number of slots	12 bus X
Product compatibility	BMXP34 processor BMXCPS power supply Specific application module I/O module
Power consumption in W	0.74 W
Electrical connection	1 connector (XBE) expansion module
Fixing mode	By 4 M6 screws plate By 4 screws 4.32...6.35 mm panel
Product weight	1.27 kg

Environment

IP degree of protection	IP20
Ambient air temperature for operation	0...60 °C
Relative humidity	10...95 % without condensation
Protective treatment	TC

Offer Sustainability

Sustainable offer status	Green Premium product
RoHS (date code: YYWW)	Compliant - since 0612 - Schneider Electric declaration of conformity Schneider Electric declaration of conformity
REACh	Reference not containing SVHC above the threshold Reference not containing SVHC above the threshold
Product environmental profile	Available Product environmental

Disclaimer: This documentation is not intended as a substitute for and is not to be used for determining suitability or reliability of these products for specific user applications

Product end of life instructions	Available End of life manual

Contractual warranty

Warranty period	18 months

Technical DataSheets

Description :
ATV320, 600V, 3PH, 1HP HD

Trade Name :
Schneider electric

Model no :
ATV320U07S6C

Product data sheet
Characteristics

ATV320U07S6C
variable speed drive ATV320 - 0.75kW - 600V - 3phase - compact

Main

Range of product	Altivar Machine ATV320
Product or component type	Variable speed drive
Product specific application	Complex machines
Device short name	ATV320
Format of the drive	Compact
Product destination	Asynchronous motors Synchronous motors
EMC filter	Without EMC filter
IP degree of protection	IP20 conforming to EN/IEC 61800-5-1
Degree of protection	UL type 1 with UL type 1 conformity kit
Type of cooling	Fan
Phase	3 phases
[Us] rated supply voltage	525...600 V (- 15...10 %)
Supply frequency	50...60 Hz (- 5...5 %)
Motor power kW	0.75 kW heavy duty
Motor power hp	1 hp heavy duty
Line current	1.5 A at 525 V heavy duty 1.4 A at 600 V heavy duty
Prospective line Isc	5 kA
Apparent power	1.5 kVA at 600 V heavy duty
Continuous output current	1.7 A at 4 kHz heavy duty
Maximum transient current	2.6 A during 60 s heavy duty
Asynchronous motor control profile	Voltage/Frequency ratio, 2 points Voltage/Frequency ratio, 5 points Flux vector control without sensor, standard Voltage/Frequency ratio - Energy Saving, quadratic U/f Flux vector control without sensor - Energy Saving
Synchronous motor control profile	Vector control without sensor
Speed drive output frequency	0.1...599 Hz

Disclaimer: This documentation is not intended as a substitute for and is not to be used for determining suitability or reliability of these products for specific user applications

Nominal switching frequency	4 kHz
Switching frequency	4...16 kHz with current derating 2...16 kHz adjustable
Safety function	STO (safe torque off) SIL 3 SS1 (safe stop 1) SMS (safe maximum speed) SLS (safe limited speed) GDL (guard door locking)
Communication port protocol	CANopen Modbus
Option card	Communication module: CANopen daisy chain RJ45 Communication module: CANopen SUB-D 9 Communication module: CANopen open style terminal block Communication module: EtherCAT RJ45 Communication module: DeviceNet Communication module: Ethernet/IP Communication module: Profibus DP V1 Communication module: Profinet Communication module: Ethernet Powerlink

Complementary

Variant	Standard version
Output voltage	<= power supply voltage
Permissible temporary current boost	1.5 x In during 60 s heavy duty
Speed range	1...100 with asynchronous motor in open-loop mode
Speed accuracy	+/- 10 % of nominal slip 0.2 Tn to Tn
Torque accuracy	+/- 15 %
Transient overtorque	170...200 % of nominal motor torque
Braking torque	<= 170 % with braking resistor during 60 s
Regulation loop	Adjustable PID regulator
Motor slip compensation	Automatic whatever the load Not available in voltage/frequency ratio (2 or 5 points) Adjustable 0...300 %
Acceleration and deceleration ramps	S U CUS Deceleration ramp automatic stop DC injection Deceleration ramp adaptation Linear Ramp switching
Braking to standstill	By DC injection
Protection type	Drive: thermal protection Drive: overcurrent between output phases and earth Drive: input phase breaks Drive: overheating protection Drive: short-circuit between motor phases
Frequency resolution	Display unit: 0.1 Hz Analog input: 0.012/50 Hz
Electrical connection	Control, screw terminal: 0.5...1.5 mm² AWG 20...AWG 16 Motor/Braking resistor, screw terminal: 2.5...6 mm² AWG 14...AWG 10 Power supply, screw terminal: 2.5...6 mm² AWG 14...AWG 10
Connector type	1 RJ45 Modbus/CANopen on front face
Physical interface	2-wire RS 485 Modbus
Transmission frame	RTU Modbus
Transmission rate	4.8, 9.6, 19.2, 38.4 kbit/s Modbus 50 kbps, 125 kbps, 250 kbps, 500 kbps, 1 Mbps CANopen
Data format	8 bits, configurable odd, even or no parity Modbus
Type of polarization	No impedance Modbus
Number of addresses	1...247 Modbus 1...127 CANopen
Method of access	Slave CANopen

Supply	Internal supply for reference potentiometer (1 to 10 kOhm): 10.5 V DC (+/- 5 %) current <= 10 mA (overload and short-circuit protection)
Local signalling	1 LED green CANopen run 1 LED red CANopen error 1 LED red drive fault
Width	4.13 in (105 mm)
Height	5.59 in (142 mm) 188 mm with EMC plate
Depth	6.22 in (158 mm)
Product weight	2.87 lb(US) (1.3 kg)
Analogue input number	3
Analogue input type	Voltage (AI1): 0...10 V DC, impedance 30000 Ohm, resolution 10 bits Bipolar differential voltage (AI2): +/- 10 V DC, impedance 30000 Ohm, resolution 10 bits Current (AI3): 0...20 mA (or 4-20 mA, x-20 mA, 20-x mA or other patterns by configuration), impedance 250 Ohm, resolution 10 bits
Discrete input number	7
Discrete input type	Programmable (sink/source) (DI1...DI4): 24...30 V DC: level 1 PLC Programmable as pulse input 20 kpps (DI5): 24...30 V DC: level 1 PLC Switch-configurable PTC probe (DI6): 24...30 V DC Safe torque off (STO): 24...30 V DC, impedance 1500 Ohm
Discrete input logic	Negative logic (sink): : DI1...DI6, > 19 V (state 0) < 13 V (state 1) Positive logic (source): : DI1...DI6, < 5 V (state 0) > 11 V (state 1)
Analogue output number	1
Analogue output type	Software-configurable current (AQ1): 0...20 mA, impedance 800 Ohm, resolution 10 bits Software-configurable voltage (AQ1): 0...10 V, impedance 470 Ohm, resolution 10 bits
Sampling duration	Analog input (AI1, AI2, AI3): 2 ms Analog output (AQ1): 2 ms
Accuracy	Analog input AI1, AI2, AI3: +/- 0.2 % for a temperature of -10...60 °C Analog input AI1, AI2, AI3: +/- 0.5 % for a temperature of 25 °C Analog output AQ1: +/- 1 % for a temperature of 25 °C Analog output AQ1: +/- 2 % for a temperature of -10...60 °C
Linearity error	Analog input (AI1, AI2, AI3): +/- 0.2...0.5 % of maximum value Analog output (AQ1): +/- 0.3 %
Discrete output number	3
Discrete output type	Configurable relay logic NO/NC (R1A, R1B, R1C): electrical durability 100000 cycles Configurable relay logic NO (R2A, R2B): electrical durability 100000 cycles Logic (LO)
Refresh time	Logic input (DI1...DI6): 8 ms (+/- 0.7 ms) Relay output (R1A, R1B, R1C): 2 ms Relay output (R2A, R2C): 2 ms
Minimum switching current	Relay output (R1, R2): 5 mA at 24 V DC
Maximum switching current	Relay output (R1) on resistive load (cos phi = 1: 3 A at 250 V AC Relay output (R1) on resistive load (cos phi = 1: 4 A at 30 V DC Relay output (R1, R2) on inductive load (cos phi = 0.4: 2 A at 250 V AC Relay output (R1, R2) on inductive load (cos phi = 0.4: 2 A at 30 V DC Relay output (R2) on resistive load (cos phi = 1: 5 A at 250 V AC Relay output (R2) on resistive load (cos phi = 1: 5 A at 30 V DC

Environment

Isolation	Between power and control terminals
Insulation resistance	> 1 mOhm at 500 V DC for 1 minute to earth
Noise level	51 dB conforming to 86/188/EEC
Power dissipation in W	31 W (fan) at 525 V, 4 kHz
Volume of cooling air	4755.18 Gal/hr(US) (18 m3/h)
Operating position	Vertical +/- 10 degree
Electromagnetic compatibility	Conducted radio-frequency immunity test conforming to IEC 61000-4-6 level 3 Electrical fast transient/burst immunity test conforming to IEC 61000-4-4 level 4 Electrostatic discharge immunity test conforming to IEC 61000-4-2 level 3 Radiated radio-frequency electromagnetic field immunity test conforming to IEC 61000-4-3 level 3 Voltage dips and interruptions immunity test conforming to IEC 61000-4-11 1.2/50 µs - 8/20 µs surge immunity test conforming to IEC 61000-4-5 level 3
Pollution degree	2 conforming to EN/IEC 61800-5-1

Vibration resistance	1.5 mm peak to peak (f = 2...13 Hz) conforming to EN/IEC 60068-2-6 1 gn (f = 13...200 Hz) conforming to EN/IEC 60068-2-6
Shock resistance	15 gn during 11 ms conforming to EN/IEC 60068-2-27
Relative humidity	5...95 % without condensation conforming to IEC 60068-2-3 5...95 % without dripping water conforming to IEC 60068-2-3
Ambient air temperature for operation	14...122 °F (-10...50 °C) without derating 122...140 °F (50...60 °C) with derating factor
Ambient air temperature for storage	-13...158 °F (-25...70 °C)
Operating altitude	<= 3280.84 ft (1000 m) without derating 3280.84...6561.68 ft (1000...2000 m) with current derating 1 % per 100 m
Environmental characteristic	Chemical pollution resistance class 3C3 EN/IEC 60721-3-3 Dust pollution resistance class 3S2 EN/IEC 60721-3-3
Standards	EN/IEC 61800-3 EN/IEC 61800-5-1 EN 55011 class A group 1 EN 61800-3 environment 1 category C2 EN 61800-3 environment 2 category C2
Product certifications	CSA NOM 117 UL RCM EAC
Marking	CE

Offer Sustainability

Sustainable offer status	Green Premium product
RoHS (date code: YYWW)	Compliant - since 1714 - Schneider Electric declaration of conformity Schneider Electric declaration of conformity
REACh	Reference not containing SVHC above the threshold Reference not containing SVHC above the threshold
Product environmental profile	Available Product Environmental Profile
Product end of life instructions	Available End of life manual

Technical DataSheets

Description :
ATV930, 600V, 3PH, 20HP, 15HP HD

Trade Name :
Schneider electric

Model no :
ATV930D15S6X

Product data sheet

ATV930D15S6X

Specifications

Variable speed drive, Altivar Process ATV900, ATV930, 20 HP, 600 V, IP21

ATV930D15S6X

Main

Range of product	Altivar Process ATV900
Device application	Industrial application
Product or component type	Variable speed drive
Product destination	Asynchronous motors Synchronous motors
Product specific application	Process for industrial
Variant	Standard version With braking chopper
Network number of phases	3 phases
Mounting mode	Wall mount
Communication port protocol	Modbus TCP Modbus serial EtherNet/IP
[Us] rated supply voltage	600 V - 15...10 %
Motor power hp	20.0 hp normal duty 15.0 hp heavy duty
Continuous output current	22 A 4 kHz normal duty 18 A 4 kHz heavy duty
EMC filter	Integrated With EMC plate option
IP degree of protection	IP21
Degree of protection	UL type 1
Option module	Slot A communication module Profibus DP V1 Slot A communication module PROFINET Slot A communication module DeviceNet Slot A communication module EtherCAT Slot A communication module CANopen daisy chain RJ45 Slot A communication module CANopen SUB-D 9 Slot A communication module CANopen screw terminals Slot A/slot B/slot C digital and analog I/O extension module Slot A/slot B/slot C output relay extension module Slot B 5/12 V digital encoder interface module Slot B analog encoder interface module Slot B resolver encoder interface module communication module Ethernet Powerlink
Discrete input logic	16 preset speeds
Asynchronous motor control profile	Optimized torque mode Constant torque standard Variable torque standard
Synchronous motor control profile	Permanent magnet motor Synchronous reluctance motor

Disclaimer: This documentation is not intended as a substitute for and is not to be used for determining suitability or reliability of these products for specific user applications

Maximum output frequency	599 Hz
Switching frequency	2...16 kHz adjustable 4...16 kHz with derating factor
Nominal switching frequency	4 kHz
Apparent power	20.4 kVA 600 V normal duty) 15.9 kVA 600 V heavy duty)
Maximum transient current	26.4 A 60 s normal duty) 27 A 60 s heavy duty)
Network frequency	50...60 Hz
Prospective line Isc	70 kA

Complementary

Discrete input number	10
Discrete input type	DI1...DI8 programmable, 24 V DC <= 30 V)3.5 kOhm DI7, DI8 programmable as pulse input 0…30 kHz, 24 V DC <= 30 V) STOA, STOB safe torque off, 24 V DC <= 30 V)> 2.2 kOhm
Discrete output number	2
Discrete output type	Logic output DQ+ 0…1 kHz <= 30 V DC 100 mA Programmable as pulse output DQ+ 0…30 kHz <= 30 V DC 20 mA Logic output DQ- 0…1 kHz <= 30 V DC 100 mA
Analogue input number	3
Analogue input type	AI1, AI2, AI3 software-configurable voltage 0...10 V DC 30 kOhm 12 bits AI1, AI2, AI3 software-configurable current 0...20 mA/4...20 mA 250 Ohm 12 bits
Analogue output number	2
Analogue output type	Software-configurable voltage AQ1, AQ2 0...10 V DC 470 Ohm 10 bits Software-configurable current AQ1, AQ2 0...20 mA 500 Ohm 10 bits
Relay output number	3
Relay output type	Configurable relay logic R1 fault relay NO/NC 100000 cycles Configurable relay logic R2 sequence relay NO 1000000 cycles Configurable relay logic R3 sequence relay NO 1000000 cycles
Maximum switching current	Relay output R1 resistive, cos phi = 1 3 A 250 V AC Relay output R1 resistive, cos phi = 1 3 A 30 V DC Relay output R1 inductive, cos phi = 0.4 7 ms 2 A 250 V AC Relay output R1 inductive, cos phi = 0.4 7 ms 2 A 30 V DC Relay output R2, R3 resistive, cos phi = 1 5 A 250 V AC Relay output R2, R3 resistive, cos phi = 1 5 A 30 V DC Relay output R2, R3 inductive, cos phi = 0.4 7 ms 2 A 250 V AC Relay output R2, R3 inductive, cos phi = 0.4 7 ms 2 A 30 V DC
Minimum switching current	Relay output R1, R2, R3 5 mA 24 V DC
Physical interface	Ethernet 2-wire RS 485
Connector type	2 RJ45 1 RJ45
Method of access	Slave Modbus TCP
Transmission rate	10, 100 Mbits 4.8 kbps 9600 bit/s 19200 bit/s
Transmission frame	RTU
Number of addresses	1…247
Data format	8 bits, configurable odd, even or no parity
Type of polarization	No impedance
4 quadrant operation possible	True
Acceleration and deceleration ramps	Linear adjustable separately from 0.01...9999 s S, U or customized
Motor slip compensation	Can be suppressed Adjustable Not available in permanent magnet motor law

	Automatic whatever the load
Braking to standstill	By DC injection
Brake chopper integrated	True
Maximum input current	19.6 A
Maximum output voltage	600.0 V
Relative symmetric network frequency tolerance	5 %
Base load current at high overload	18.0 A
Base load current at low overload	22.0 A
Power dissipation in W	Forced convection 192 W 600 V 4 kHz Natural convection 136 W 600 V 4 kHz
With safety function Safely Limited Speed (SLS)	True
With safety function Safe brake management (SBC/SBT)	True
With safety function Safe Operating Stop (SOS)	False
With safety function Safe Position (SP)	False
With safety function Safe programmable logic	False
With safety function Safe Speed Monitor (SSM)	False
With safety function Safe Stop 1 (SS1)	True
With sft fct Safe Stop 2 (SS2)	False
With safety function Safe torque off (STO)	True
With safety function Safely Limited Position (SLP)	False
With safety function Safe Direction (SDI)	False
Protection type	Thermal protection motor Safe torque off motor Motor phase break motor Thermal protection drive Safe torque off drive Overheating drive Overcurrent between output phases and earth drive Overload of output voltage drive Short-circuit protection drive Motor phase break drive Overvoltages on the DC bus drive Line supply overvoltage drive Line supply undervoltage drive Line supply phase loss drive Overspeed drive Break on the control circuit drive
Quantity per set	1
Width	6.73 in (171 mm)
Height	16.10 in (409 mm)
Depth	9.29 in (236 mm)
Product weight	12.13 lb(US) (5.5 kg)
Electrical connection	Control screw terminal 0.5...1.5 mm² AWG 20...AWG 16 Motor screw terminal 6...10 mm² AWG 10...AWG 8 Line side screw terminal 6 mm² AWG 10 DC bus screw terminal 6 mm² AWG 10 10/100 Mbit/s Ethernet IP/Modbus TCP

	4.8, 9.6, 19.2, 38.4 kbit/s Modbus serial
Exchange mode	Half duplex, full duplex, autonegotiation Ethernet IP/Modbus TCP 8 bits, configurable odd, even or no parity Modbus serial No impedance Modbus serial 1…247 Modbus serial
Supply	External supply for digital inputs 24 V DC 19…30 V), <1.25 mA overload and short-circuit protection Internal supply for reference potentiometer (1 to 10 kOhm) 10.5 V DC +/- 5 %, <10 mA overload and short-circuit protection Internal supply for digital inputs and STO 24 V DC 21…27 V), <200 mA overload and short-circuit protection
Local signalling	Local diagnostic 3 LED mono/dual colour) Presence of voltage 1 LED red) Embedded communication status 3 LED dual colour) Communication module status 4 LED dual colour)
Input compatibility	DI1...DI8 discrete input level 1 PLC EN/IEC 61131-2 DI7, DI8 pulse input level 1 PLC IEC 65A-68 STOA, STOB discrete input level 1 PLC EN/IEC 61131-2 Positive logic (source) DI1...DI8), < 5 V, > 11 V Negative logic (sink) DI1...DI8), > 16 V, < 10 V Positive logic (source) DI7, DI8), < 0.6 V, > 2.5 V Positive logic (source) STOA, STOB), < 5 V, > 11 V
Sampling duration	2 ms +/- 0.5 ms DI1...DI8) - discrete input 5 ms +/- 1 ms DI7, DI8) - pulse input 1 ms +/- 1 ms AI1, AI2, AI3) - analog input 5 ms +/- 1 ms AQ1, AQ2) - analog output
Accuracy	+/- 0.6 % AI1, AI2, AI3 for a temperature variation 60 °C analog input +/- 1 % AQ1, AQ2 for a temperature variation 60 °C analog output
Linearity error	AI1, AI2, AI3 +/- 0.15 % of maximum value analog input AQ1, AQ2 +/- 0.2 % analog output
Refresh time	Relay output R1, R2, R3)5 ms +/- 0.5 ms)
Isolation	Between power and control terminals

Environment

Operating altitude	<= 1000 m without derating 1000...4800 m with current derating 1 % per 100 m
Operating position	Vertical +/- 10 degree
Product certifications	CSA UL TÜV
Marking	CE
Standards	UL 508C EN/IEC 61800-3 EN/IEC 61800-5-1 IEC 61000-3-12 IEC 60721-3 IEC 61508 IEC 13849-1
Assembly style	Enclosed
Electromagnetic compatibility	Electrostatic discharge immunity test level 3 IEC 61000-4-2 Radiated radio-frequency electromagnetic field immunity test level 3 IEC 61000-4-3 Electrical fast transient/burst immunity test level 4 IEC 61000-4-4 1.2/50 µs - 8/20 µs surge immunity test level 3 IEC 61000-4-5 Conducted radio-frequency immunity test level 3 IEC 61000-4-6
Environmental class (during operation)	Class 3C3 according to IEC 60721-3-3 Class 3S3 according to IEC 60721-3-3
Maximum acceleration under shock impact (during operation)	150 m/s² at 11 ms
Maximum acceleration under vibrational stress (during operation)	10 m/s² at 13...200 Hz
Maximum deflection under vibratory load (during operation)	1.5 mm at 2...13 Hz

Permitted relative humidity (during operation)	Class 3K5 according to EN 60721-3
Volume of cooling air	27210.21 Gal/hr(US) (103 m3/h)
Overvoltage category	III
Regulation loop	Adjustable PID regulator
Insulation resistance	> 1 MOhm 500 V DC for 1 minute to earth
Noise level	56 dB 86/188/EEC
Vibration resistance	1.5 mm peak to peak 2…13 Hz)IEC 60068-2-6 1 gn 13…200 Hz)IEC 60068-2-6
Shock resistance	15 gn 11 ms IEC 60068-2-27
Environmental characteristic	Chemical pollution resistance class 3C3 EN/IEC 60721-3-3 Dust pollution resistance class 3S3 EN/IEC 60721-3-3
Relative humidity	5…95 % without condensation IEC 60068-2-3
Ambient air temperature for operation	5…122 °F (-15…50 °C) without derating) 122…140 °F (50…60 °C) with derating factor) 56 dB
Pollution degree	2
Ambient air transport temperature	-40…158 °F (-40…70 °C)
Ambient air temperature for storage	-40…158 °F (-40…70 °C)

Packing Units

Unit Type of Package 1	PCE
Number of Units in Package 1	1
Package 1 Height	13.39 in (34.0 cm)
Package 1 Width	8.66 in (22.0 cm)
Package 1 Length	22.83 in (58.0 cm)
Package 1 Weight	19.40 lb(US) (8.8 kg)

Offer Sustainability

Sustainable offer status	Green Premium product
REACh Regulation	REACh Declaration
EU RoHS Directive	Pro-active compliance (Product out of EU RoHS legal scope) EU RoHS Declaration
Mercury free	Yes
China RoHS Regulation	China RoHS declaration
RoHS exemption information	Yes
Environmental Disclosure	Product Environmental Profile
Circularity Profile	End of Life Information
WEEE	The product must be disposed on European Union markets following specific waste collection and never end up in rubbish bins
Upgradeability	Upgraded components available

Product data sheet ATV930D15S6X

Dimensions Drawings

Dimensions

Front, Left and Rear View

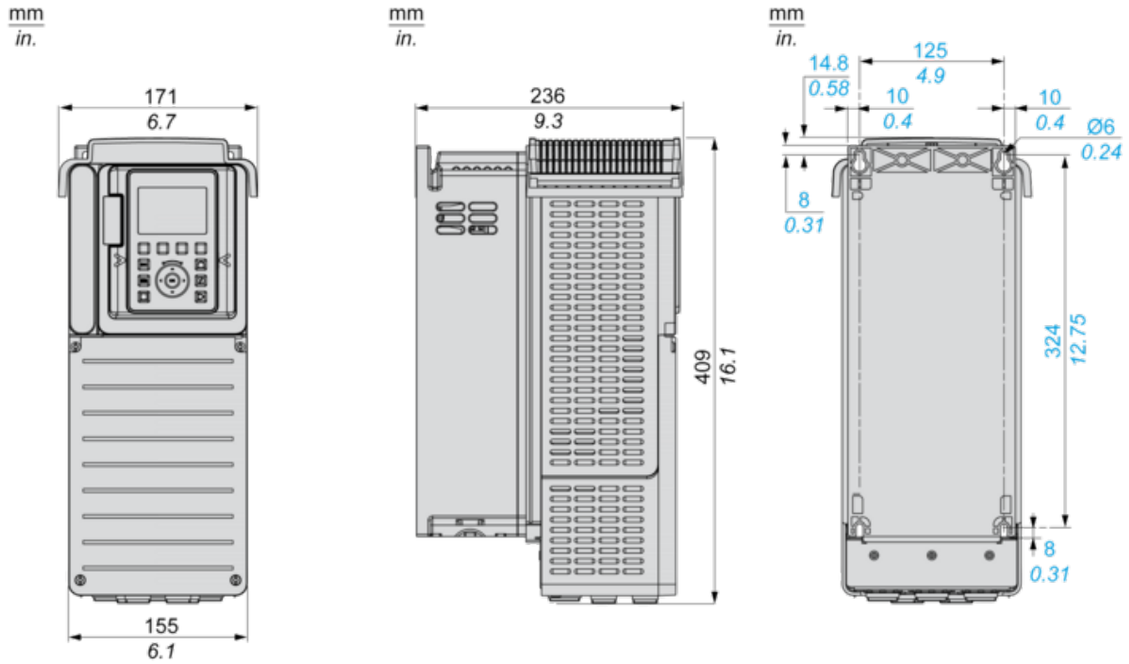

Clearances

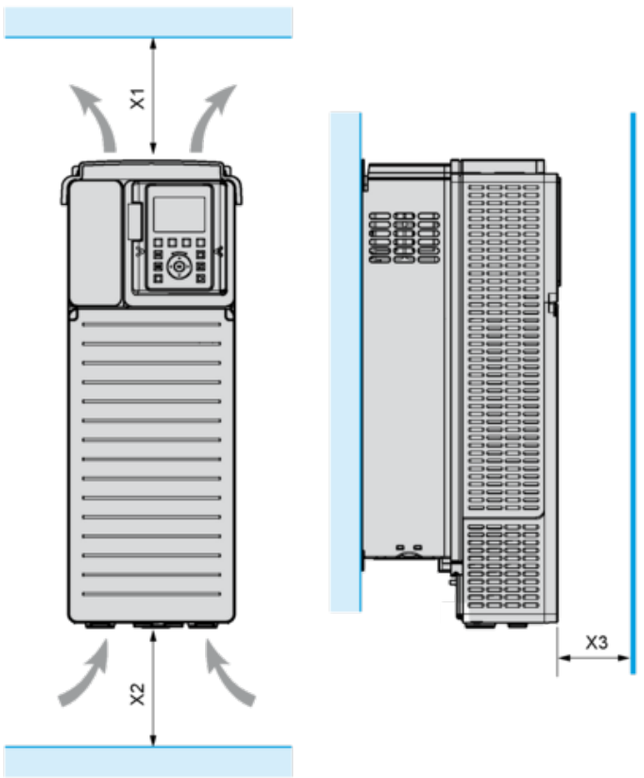

X1	X2	X3
≥ 100 mm (3.94 in.)	≥ 100 mm (3.94 in.)	≥ 10 mm (0.39 in.)

- Mount the device in a vertical position (±10°). This is required for cooling the device.
- Do not mount the device close to heat sources.
- Leave sufficient free space so that the air required for cooling purposes can circulate from the bottom to the top of the drive.

Mounting Types

Mounting Type A: Individual IP21

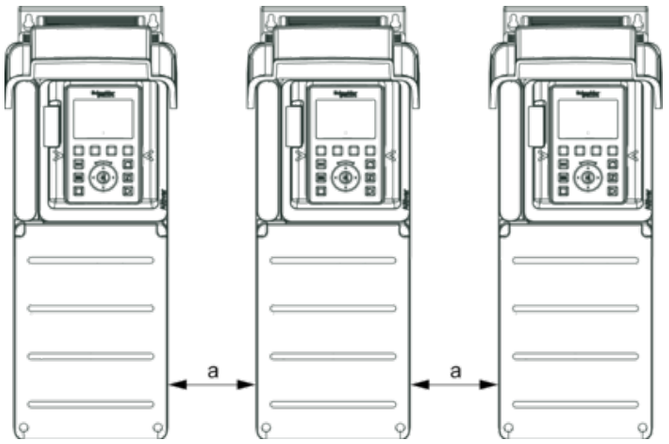

a ≥ 100 mm (3.94 in.)

Mounting Type B: Side by Side IP20

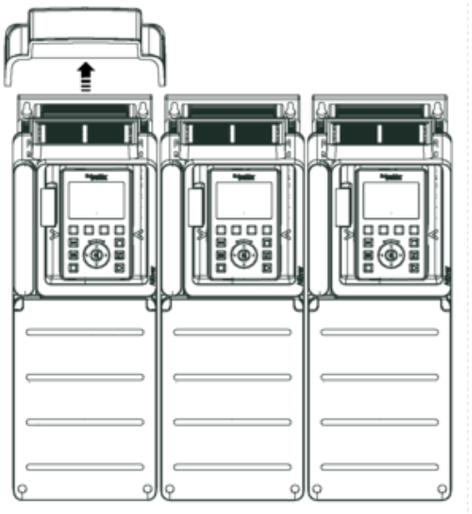

Mounting Type C: Individual IP20

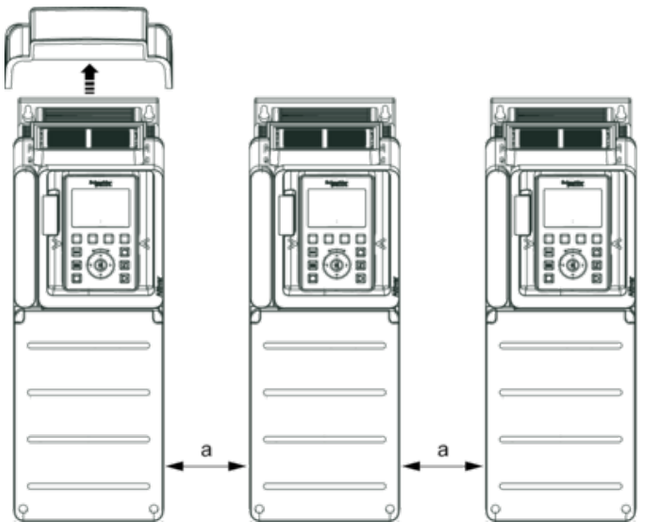

a ≥ 0

Three-Phase Power Supply with Upstream Breaking via Line Contactor

Connection diagrams conforming to standards EN 954-1 category 1 and IEC/EN 61508 capacity SIL1, stopping category 0 in accordance with standard IEC/EN 60204-1

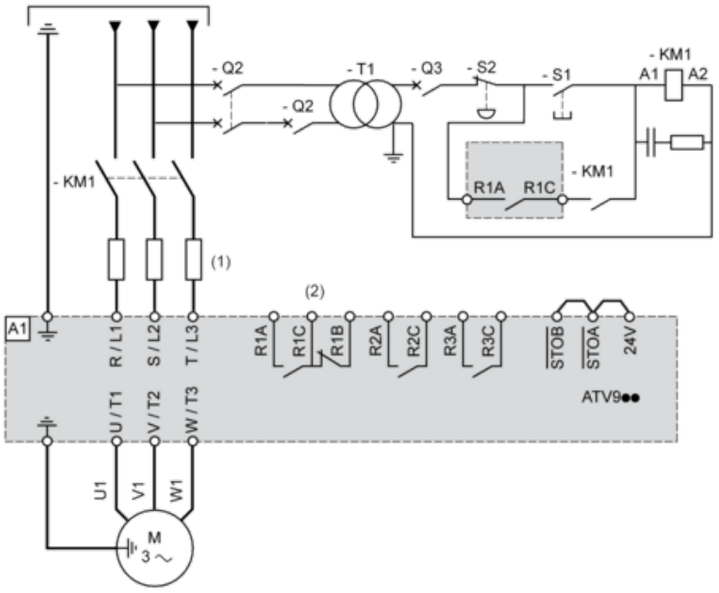

(1) Line choke if used

(2) Use relay R1 set to operating state Fault to switch Off the product once an error is detected.

A1 : Drive

KM1 : Line Contactor

Q2, Q3 : Circuit breakers

S1, S2 : Pushbuttons

T1 : Transformer for control part

Three-Phase Power Supply with Downstream Breaking via Contactor

Connection diagrams conforming to standards EN 954-1 category 1 and IEC/EN 61508 capacity SIL1, stopping category 0 in accordance with standard IEC/EN 60204-1

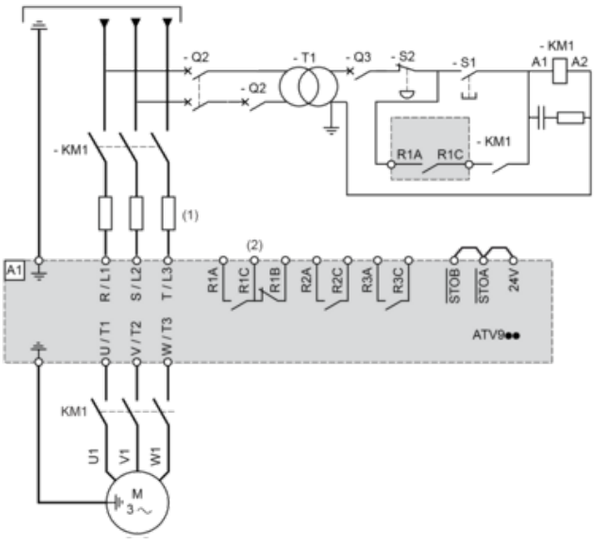

(1) Line choke if used

(2) Use relay R1 set to operating state Fault to switch Off the product once an error is detected.

A1 : Drive

KM1 : Contactor

Control Block Wiring Diagram

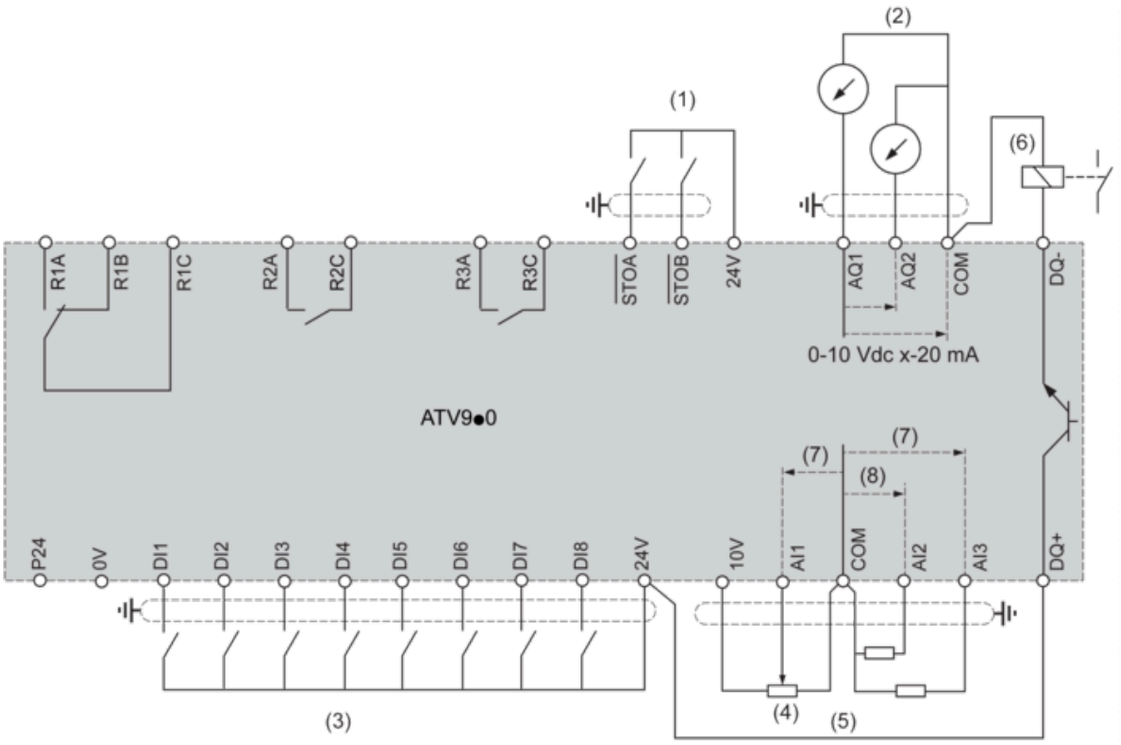

(1) Safe Torque Off
(2) Analog Output
(3) Digital Input
(4) Reference potentiometer
(5) Analog Input
(6) Digital Output
(7) 0-10 Vdc, x-20 mA
(8) 0-10 Vdc, -10 Vdc...+10 Vdc
R1A, R1B, R1C : Fault relay
R2A, R2C : Sequence relay
R3A, R3C : Sequence relay

Sensor Connection

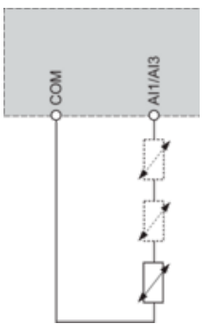

It is possible to connect either 1 or 3 sensors on terminals AI1 or AI3

Sink / Source Switch Configuration

The switch is used to adapt the operation of the logic inputs to the technology of the programmable controller outputs.

- Set the switch to Source (factory setting) if using PLC outputs with PNP transistors.
- Set the switch to Ext if using PLC outputs with NPN transistors.

Switch Set to SRC (Source) Position Using the Output Power Supply for the Digital Inputs

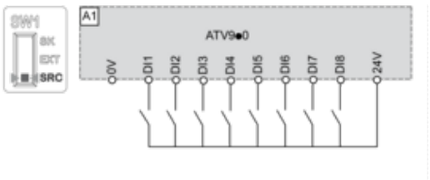

Switch Set to SRC (Source) Position and Use of an External Power Supply for the DIs

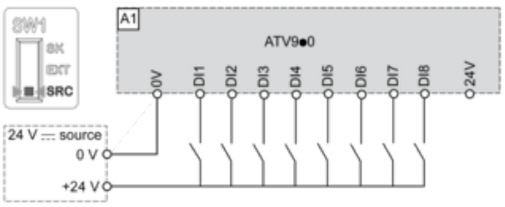

Switch Set to SK (Sink) Position Using the Output Power Supply for the Digital Inputs

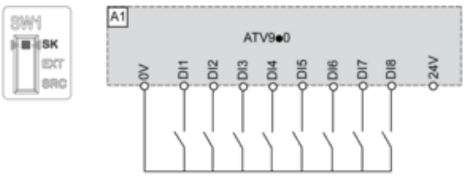

Switch Set to EXT Position Using an External Power Supply for the DIs

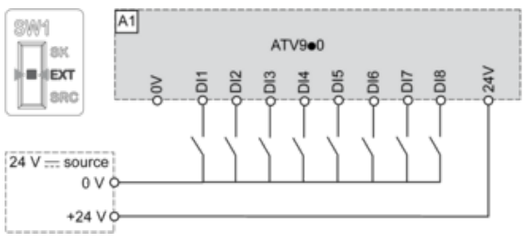

Derating Curves

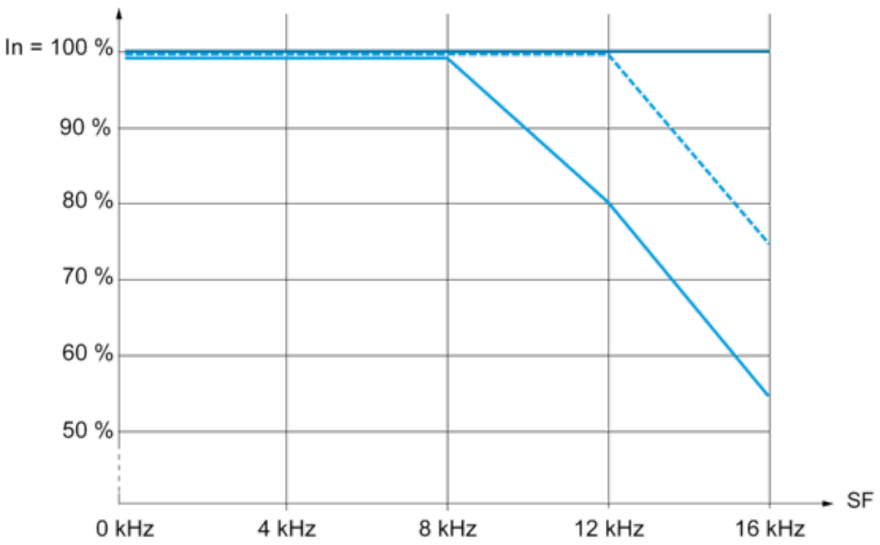

40 °C (104 °F) - Mounting type A, B and C
50 °C (122 °F) - Mounting type A, B and C
60 °C (140 °F) - Mounting type B and C

In : Nominal Drive Current

SF : Switching Frequency

Recommended replacement(s)

Description :
GEAR REDUCER
GEAR RATIO 1098:1
POSITION M1
4 CHANNEL

Trade Name :
Sew Eurodrive

Model no :
M5RSF60 (ratio 1098) 4 Channel

SEW EURODRIVE

Industrial Gear Units – M... Series
Industriegetriebe – Baureihe M...

Edition

03/2003

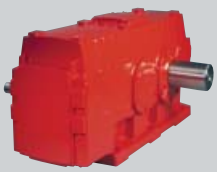
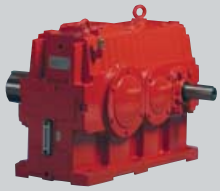

Catalog

1121 4805 / EN/DE

LISTE DE MATÉRIEL/MATERIAL LIST						C– C–30635	00
ARTICLE ITEM	REPÈRE REF.	NOMBRE QTY	DÉSIGNATION/DESIGNATION		MAT.	DIM.	REMARQUES/NOTES

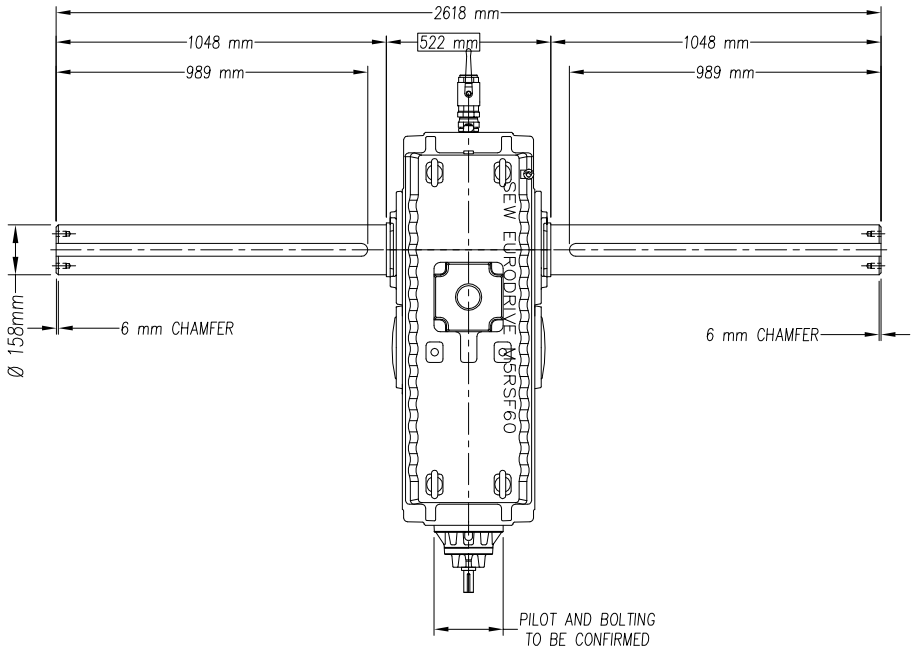

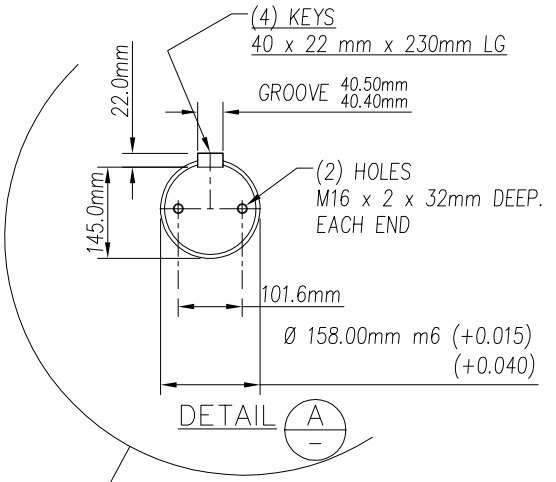

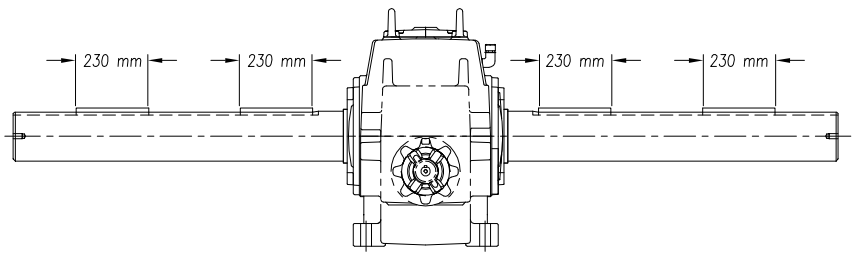

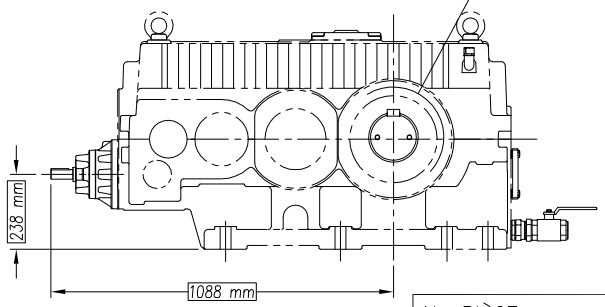

No PIÈCE:
PART No.: **IFI-02050**

SCEAU/STAMP

APP.

PROJECTION TROISIEME ANGLE
THIRD ANGLE PROJECTION

Tolérances sauf indications contraires
Tolerances except were indicated otherwise

SYSTÈME IMPÉRIAL/IMPERIAL SYSTEM

	0 – 36"	36" +
FRACTION	± 1/16"	± 1/8"
2 PLACES .XX	± .010"	—
3 PLACES .XXX	± .005"	—

SYSTÈME MÉTRIQUE/METRIC SYSTEM

	0 – 1000mm	1000mm +
ENTIER/INTEGER	± 1 mm	± 2mm
2 PLACES .XX	± .25 mm	—
3 PLACES .XXX	± .125 mm	—

ÉTAT DE SURFACE/SURFACE FINISH 125
SOUDURE/WELD
ANGLES ± 1/2"

fournier

ROTARY PRESS Ø 900 mm.
Model # 4–900/4000CV
GEAR REDUCER "SEW EURODRIVE" # M5RSF60
SHAFT DIMENSIONS

Echelle/Scale	Des./By: E. GAMACHE	Dossier/File	Pièce no/Part no.	REV.
1 : 10	Ver.:		C– C–30635	00
Date 09/08/2010	App.:			

No	DESCRIPTION	DATE	PAR/BY
3			
2			
1			

REVISIONS

CE DESSIN ET TOUTES LES INFORMATIONS QU'IL CONTIENT SONT LA PROPRIETE EXCLUSIVE DE LES INDUSTRIES FOURNIER INC. IL EST STRICTEMENT INTERDIT DE COMMUNIQUER OU UTILISER SON CONTENU A D'AUTRES FINS QUE CELLES PERMISES ORIGINALEMENT OU POUVANT ETRE PREJUDICIABLES AUX INTERETS DE LES INDUSTRIES FOURNIER INC. TOUTE REPRODUCTION DE CE DESSIN EST INTERDITE ET IL DOIT ETRE RETOURNE SUR DEMANDE.

THIS DRAWING AND ALL THE INFORMATION IT CONTAINS ARE THE EXCLUSIVE PROPERTY OF LES INDUSTRIES FOURNIER INC. IT IS STRICTLY FORBIDDEN TO COMMUNICATE OR USE THE INFORMATION FOR PURPOSES OTHER THAN THE ORIGINAL INTENDED ONES OR IF THE USE COULD BE HARMFUL TO THE INTERESTS OF LES INDUSTRIES FOURNIER INC. THIS DRAWING IN WHOLE OR IN PART MAY NOT BE REPRODUCED IN ANY FASHION AND HAS TO BE RETURNED TO LES INDUSTRIES FOURNIER INC. UPON REQUEST.

M

OPTIMIZED FOR HEAVY DUTY APPLICATIONS

Market Conformity

The M Series of industrial gear units meets even the highest demands on quality, reliability and performance. The optimized product range made of high-quality material with high thermal limit rating permits transmission of highest power at very small outer dimensions. This means increased safety with drive applications that have been operated with conventional gear units so far or economical advantages for new applications. The standard program comprises horizontal and genuine vertical gear units. This ensures an application-conform gear unit selection.

M stands for modular – and the series is based on this idea both in terms of design and economy. Customization to the required characteristics of the drive and the machine design is made easier by simply adding options and mounting parts. Supported by progressive CAD and CAM technology, the gear units are produced upon receipt of an order. A modification of the output shaft or a drywell can be realized without affecting the delivery time.

Reliability

In compliance with the project planning regulations, the M Series ensures long service life with optimum lubrication and sealing characteristics.
Combined with the experience of the SEW consulting engineers, the manufacturing process with its strict quality guidelines and testing programs guarantees the reliability of the M Series industrial gear units.

User-friendliness

The design features and the wide range of options make the M Series especially user-friendly . Especially important are easy mounting and installation as well as easy maintenance which is also ensured by the horizontal housing separation.
Modern industrial design, gear unit sizes with optimum steps and integrated accessories make for economical use of the available space.

3.3 Unit designation / nameplates

Sample unit designation

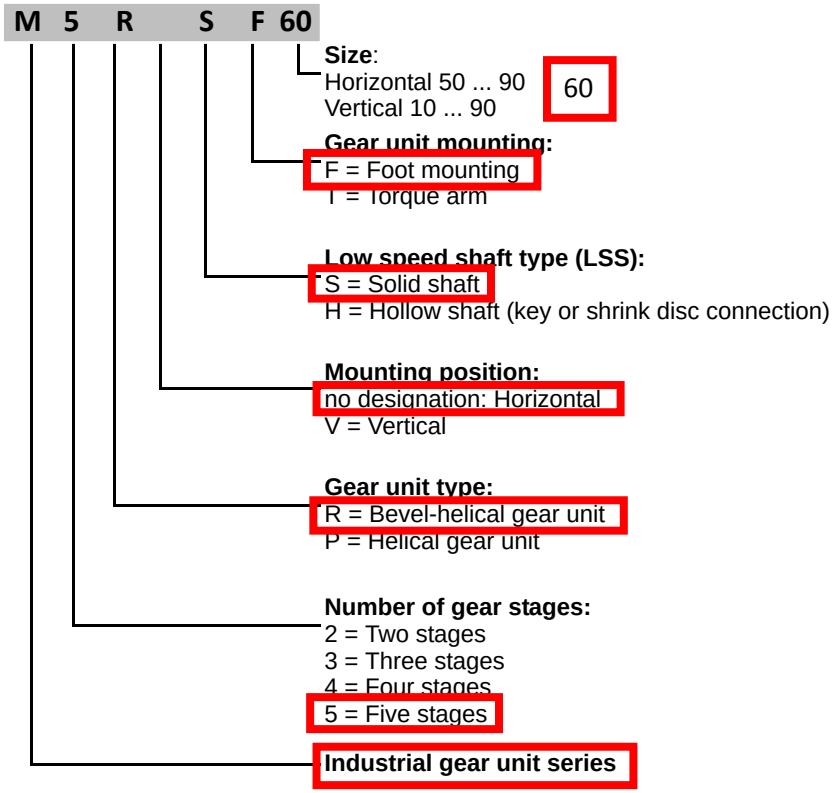

M 3 P S F 50

Series Serie	Number of stages Anzahl Getriebe-stufen	Gear Unit design Getriebeausführung	LSS type LSS Typ	Attachment Einbauweise	Size Größe
M	**2 - 3 - 4 - 5**	Helical Gear Unit (**P**arallel Shafts) Stirnradgetriebe	**S** Solid Shaft Vollwelle	**F** Foot Fuß	**50 - 60 - 70 - 80 - 90**
		P Horizontal LSS **PV** Vertical LSS Vertikal LSS			
		Bevel Helical Gear Unit (**R**ight-Angle Shafts) Kegelstirnradgetriebe	**H** Hollow Shaft Hohlwelle	**T** Torque Arm Mounting Bracket Befestigung für Drehmomen-tenstütze	
		R Horizontal LSS **RV** Vertical LSS Vertikal LSS			

Number of stages Anzahl Getriebestufen			2
Helical Gear Units Stirnradgetriebe	Horizontal LSS	Solid LSS Vollwelle LSS	**M2PSF** Page / Seite Technical Data Technische Daten 2.1- Dimensions Abmessungen 3.1-
		Hollow LSS Hohlwelle LSS	**M2PHF M2PHT** Page / Seite Technical Data Technische Daten 2.1- Dimensions Abmessungen 3.1-
	Vertical LSS Vertikal LSS	Solid LSS Vollwelle LSS	**M2PVSF** Page / Seite Technical Data Technische Daten 2.8- Dimensions Abmessungen 3.13-
		Hollow LSS Hohlwelle LSS	**M2PVHF** Page / Seite Technical Data Technische Daten 2.8- Dimensions Abmessungen 3.13-
Bevel Helical Gear Units Kegelstirnradgetriebe	Horizontal LSS	Solid LSS Vollwelle LSS	
		Hollow LSS Hohlwelle LSS	
	Vertical LSS Vertikal LSS	Solid LSS Vollwelle LSS	
		Hollow LSS Hohlwelle LSS	
Ratio range i_N Übersetzungsbereich i_N			6.3 … 18

3	4	5
M3PSF Page / Seite Technical Data / Technische Daten 2.1- Dimensions / Abmessungen 3.3-	**M4PSF** Page / Seite Technical Data / Technische Daten 2.1- Dimensions / Abmessungen 3.5-	
M3PHF M3PHT Page / Seite Technical Data / Technische Daten 2.1- Dimensions / Abmessungen 3.3-	**M4PHF M4PHT** Page / Seite Technical Data / Technische Daten 2.1- Dimensions / Abmessungen 3.5-	
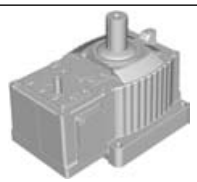 **M3PVSF** Page / Seite Technical Data / Technische Daten 2.8- Dimensions / Abmessungen 3.17-	**M4PVSF** Page / Seite Technical Data / Technische Daten 2.8- Dimensions / Abmessungen 3.21-	
M3PVHF Page / Seite Technical Data / Technische Daten 2.8- Dimensions / Abmessungen 3.17-	**M4PVHF** Page / Seite Technical Data / Technische Daten 2.8- Dimensions / Abmessungen 3.21-	
M3RSF Page / Seite Technical Data / Technische Daten 2.5- Dimensions / Abmessungen 3.7-	**M4RSF** Page / Seite Technical Data / Technische Daten 2.5- Dimensions / Abmessungen 3.9-	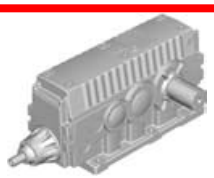 **M5RSF** Page / Seite Technical Data / Technische Daten 2.5- Dimensions / Abmessungen 3.11-
M3RHF M3RHT Page / Seite Technical Data / Technische Daten 2.5- Dimensions / Abmessungen 3.7-	**M4RHF M4RHT** Page / Seite Technical Data / Technische Daten 2.5- Dimensions / Abmessungen 3.9-	**M5RHF M5RHT** Page / Seite Technical Data / Technische Daten 2.5- Dimensions / Abmessungen 3.11-
M3RVSF Page / Seite Technical Data / Technische Daten 2.11- Dimensions / Abmessungen 3.25-	**M4RVSF** Page / Seite Technical Data / Technische Daten 2.11- Dimensions / Abmessungen 3.29-	
M3RVHF Page / Seite Technical Data / Technische Daten 2.11- Dimensions / Abmessungen 3.25-	**M4RVHF** Page / Seite Technical Data / Technische Daten 2.11- Dimensions / Abmessungen 3.29-	
14 ... 80 **14 ... 90**	**90 ... 400**	**355 ... 1800**

Horizontal LSS — Horizontale LSS

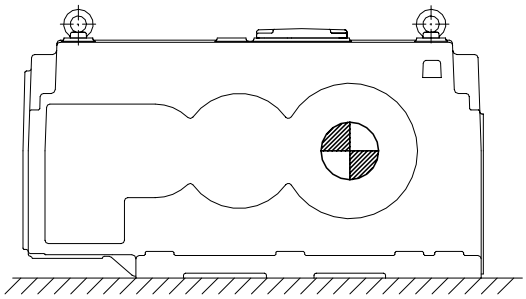

M..SF 50-90

Solid LSS / Vollwelle LSS (S)

Foot Mounting / Fußmontage (F)

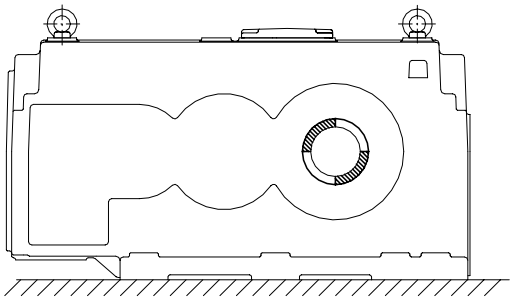

M..HF 50-90

Hollow LSS / Hohlwelle LSS (H)

Foot Mounting / Fußmontage (F)

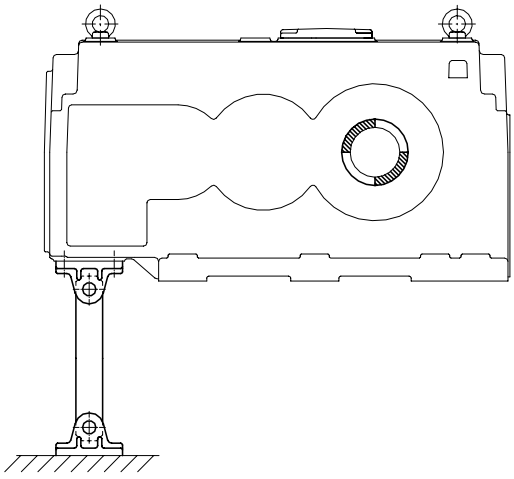

M..HT 50-90

Hollow LSS / Hohlwelle LSS (H)

Torque Arm Mounting Bracket / Befestigung für Drehmomentenstütze (T)

Torque Arm / Drehmomentenstange

Size Größe	n_1 min^{-1}	Nominal Mechanical Power Ratings P_{N1} in kW — Mechanische Nennleistungen P_{N1} in kW															
		Nominal Ratio i_N — Nennübersetzung i_N															
M3R..		**14**	**16**	**18**	**20**	**22.5**	**25**	**28**	**31.5**	**35.5**	**40**	**45**	**50**	**56**	**63**	**71**	**80**
	1800	376	376	376	324	303	288	259	238+	201+	177+	158+	136+	122+	108+	85.1+	76.0+
50	1500	331	331	331	272	254+	242+	218+	201+	168+	148+	132+	115+	103+	92.1+	71.7+	64.0+
	1200	283+	283+	279	220+	204+	196+	176+	162+	135+	119+	106+	93.0+	83.0+	74.6+	58.1+	51.8+
	1000	249+	249+	234	185*	171+	165+	148+	137+	113+	99.5+	89.3+	78.3+	69.9+	62.8+	48.9+	43.7+
	1800	542	542	514	514	470	418	368	331	302+	272+	248+	223+	199+	152+	137+	119+
60	1500	467	467	453	437	395	352	309+	278+	254+	229+	209+	188+	167+	134+	115+	100+
	1200	376	376	376	353+	320+	284+	250+	225+	206+	185+	169+	152+	135+	115+	92.4+	81.1+
	1000	315	315	315	297+	269+	239+	211+	189+	173+	156+	142+	128+	114+	101+	77.5+	68.3+
	1800	815*	815*	807*	751*	680*	609*	554*	505*	459*	410	372+	320+	294+	263+	234+	174+
70	1500	718	718	711	661	599	511	466	424+	404+	360+	316+	269+	247+	221+	197+	147+
	1200	583	583	583	564	509	414+	377+	343+	326+	294+	254+	218+	200+	179+	159+	119+
	1000	485	485	485	478+	433+	348+	317+	289+	273+	246+	212+	183+	168+	151+	134+	100+
	1800	936*	936*	935*	912*	861*	774*	651*	617*	559*	501*	452	411	366+	306+	274+	232+
80	1500	824	824	823	803	723	650	546	519	468+	421+	380+	346+	308+	258+	231+	195+
	1200	705	705	704	687	585	526	440+	420+	377+	341+	308+	280+	249+	209+	187+	158+
	1000	600+	600+	600+	600+	492+	442+	368+	353+	315+	287+	259+	236+	210+	176+	157+	133+
	1800	-	-	-	-	-	-	-	-	-	-	-	516*	462+	394+	333+	315+
90	1500	1099*	1099*	1086*	1015*	953*	866*	759*	678*	626*	562*	499*	434+	386+	332+	281+	265+
	1200	887	887	887	868	770	700	613+	548+	506+	454+	404+	350+	310+	268+	228+	214+
	1000	744	744	744	744	647	588+	516+	461+	426+	382+	339+	294+	259+	226+	192+	180+

M4R..		**90**	**100**	**112**	**125**	**140**	**160**	**180**	**200**	**225**	**250**	**280**	**315**
	1800	97.8+	84.0+	75.1+	66.5+	60.5+	55.6+	50.2+	46.1+	40.1+	33.5+	30.3+	27.7+
50	1500	82.1+	70.7+	63.3+	56.8+	52.3+	48.1+	43.3+	39.8+	33.6+	29.0+	26.1+	23.9+
	1200	66.0+	57.9+	52.7+	47.5+	43.7+	38.9+	35.6+	32.0+	27.2+	24.2+	21.8+	19.6+
	1000	55.1+	50.0+	45.5+	41.0+	37.5+	32.6+	29.7+	26.7+	22.8+	20.7+	18.3+	16.3+
	1800	136+	124+	116+	103+	83.5+	83.5+	78.3+	69.6+	58.6+	53.9+	40.6+	36.5+
60	1500	115+	104+	97.7+	88.1+	69.8+	69.8+	67.7+	58.4+	50.7+	46.5+	35.1+	31.6+
	1200	93.2+	84.3+	78.9+	73.7+	56.1+	56.1+	56.1+	47.1+	42.3+	38.7+	29.3+	26.3+
	1000	79.8+	70.7+	66.2+	63.6+	46.8+	46.8+	46.8+	39.6+	35.8+	32.3+	25.3+	22.7+
	1800	207+	191+	172+	150+	137+	120+	107+	95.2+	85.2+	77.3+	70.6+	64.0+
70	1500	180+	159+	143+	125+	114+	100+	89.6+	79.4+	71.0+	66.8+	61.0+	54.1+
	1200	144+	128+	115+	100+	91.6+	80.3+	71.7+	63.6+	56.9+	54.7+	48.9+	43.3+
	1000	120+	106+	95.8+	83.6+	76.4+	66.9+	59.8+	53.0+	47.5+	45.6+	40.8+	36.1+
	1800	238+	238+	217+	195+	176+	158+	147+	118+	107+	93.2+	82.2+	74.5+
80	1500	208+	203+	183+	166+	152+	132+	124+	102+	92.3+	77.8+	70.9+	64.2+
	1200	167+	167+	152+	135+	124+	106+	100+	85.0+	77.1+	62.3+	59.1+	53.6+
	1000	140+	140+	131+	113+	104+	89.2+	84.0+	73.4+	65.1+	51.9+	51.0+	45.3+
	1800	345	284+	255+	255+	244+	221+	196+	157+	144+	118+	119+	108+
90	1500	304+	238+	214+	214+	211+	185+	164+	136+	124+	102+	102+	92.8+
	1200	248+	191+	172+	172+	170+	150+	133+	113+	103+	84.5+	83.9+	74.3+
	1000	208+	160+	143+	143+	142+	126+	111+	97.7+	88.7+	70.5+	70.0+	62.0+

M5R..		**355**	**400**	**450**	**500**	**560**	**630**	**710**	**800**	**900**	**1000**	**1120**	**1250**	**1400**	**1600**	**1800**
	1800	27.5+	24.0+	21.7+	19.1+	17.3+	14.9+	13.5+	11.9+	10.7+	9.62+	8.44+	7.60+	6.79+	5.87+	4.95+
50	1500	22.9+	20.0+	18.1+	15.9+	14.5+	12.5+	11.3+	9.90+	8.92+	8.03+	7.04+	6.34+	5.67+	4.90+	4.13+
	1200	18.4+	16.0+	14.5+	12.8+	11.6+	9.98+	9.04+	7.93+	7.14+	6.43+	5.64+	5.07+	4.54+	3.96+	3.34+
	1000	15.3+	13.4+	12.1+	10.7+	9.65+	8.32+	7.54+	6.61+	5.96+	5.36+	4.70+	4.25+	3.85+	3.31+	2.78+
	1800	39.9+	36.2+	32.5+	29.2+	25.3+	22.8+	20.4+	18.5+	16.4+	14.4+	13.0+	11.6+	10.2+	9.16+	7.59+
60	1500	33.5+	30.2+	27.1+	24.4+	21.1+	19.0+	17.0+	15.4+	13.7+	12.0+	10.8+	9.68+	8.48+	7.64+	6.33+
	1200	26.8+	24.2+	21.7+	19.5+	16.9+	15.2+	13.7+	12.4+	11.0+	9.62+	8.66+	7.75+	6.80+	6.18+	5.19+
	1000	22.4+	20.2+	18.1+	16.3+	14.1+	12.7+	11.4+	10.3+	9.16+	8.02+	7.23+	6.48+	5.77+	5.26+	4.33+
	1800	55.0+	48.3+	43.5+	39.3+	35.0+	31.6+	28.1+	26.9+	23.5+	21.3+	18.5+	16.7+	14.9+	13.2+	10.2+
70	1500	45.9+	40.3+	36.3+	32.8+	29.2+	26.3+	23.4+	22.5+	19.6+	17.8+	15.5+	13.9+	12.5+	11.0+	8.46+
	1200	36.7+	32.3+	29.0+	26.3+	23.4+	21.1+	18.7+	18.0+	15.7+	14.2+	12.4+	11.1+	9.97+	8.93+	6.77+
	1000	30.6+	26.9+	24.2+	21.9+	19.5+	17.6+	15.6+	15.0+	13.1+	11.9+	10.3+	9.34+	8.47+	7.61+	5.64+
	1800	66.8+	66.8+	62.1+	56.2+	49.9+	43.3+	38.5+	33.4+	29.9+	27.3+	25.0+	21.3+	18.9+	15.4+	14.9+
80	1500	55.9+	55.9+	51.8+	46.9+	41.7+	36.1+	32.0+	27.8+	25.0+	22.7+	20.8+	17.7+	15.7+	12.9+	12.4+
	1200	44.8+	44.8+	41.5+	37.5+	33.4+	28.8+	25.6+	22.3+	20.0+	18.2+	16.7+	14.2+	12.6+	10.3+	9.94+
	1000	37.5+	37.5+	34.6+	31.3+	27.8+	24.0+	21.4+	18.6+	16.7+	15.2+	13.9+	11.9+	10.7+	8.59+	8.28+
	1800	98.2+	94.8+	66.8+	66.8+	66.8+	59.7+	52.1+	46.1+	41.5+	37.0+	32.8+	28.6+	25.4+	20.1+	18.0+
90	1500	82.1+	79.1+	55.9+	55.9+	55.7+	49.8+	43.5+	38.5+	34.6+	30.9+	27.3+	23.8+	21.2+	16.8+	15.0+
	1200	66.0+	63.3+	44.8+	44.8+	44.6+	39.9+	34.8+	30.8+	27.7+	24.7+	21.9+	19.1+	17.0+	13.6+	12.3+
	1000	55.1+	52.8+	37.5+	37.5+	37.2+	33.2+	29.0+	25.7+	23.1+	20.6+	18.3+	16.0+	14.4+	11.6+	10.5+

*) Pressure lubrication is required / Druckschmierung erforderlich

+) Bath lubrication is possible / Badschmierung möglich

13.0 kW=17.43hp

Power ratings: The ratings are nominal, service factor F_s = 1.0. Selection of gear unit: see page 1.11-.
Lubrication: Splash lubrication is used, unless otherwise indicated. Pressure lubrication is highly recommended when the mechanical power rating P_{K1} is higher than 500 kW.
Cooling: Additional cooling is required, when the mechanical power rating P_{K1} is higher than the thermal rating P_T.

Leistungen: Die Leistungswerte sind Nennleistungen. Bei Wahl des Zahnradgetriebes: siehe 1.11-.
Schmierung: Tauchschmierung standard, wenn nicht besonders gekennzeichnet. Druckschmierung wird bevorzugt, wenn die mechanische Leistung P_{K1} größer als 500 kW ist.
Kühlung: Zusatzkühlung wird benötigt, wenn die mechanische Leistung P_{K1} größer als die thermische Grenzleistung P_T ist.

Manufacturer reserves the right to alteration. *Recht auf Änderungen vorbehalten.*

Exact Ratios i_{ex} — Exakte Übersetzungen i_{ex}

Nominal Ratio i_N — Nennübersetzung i_N

Size / Größe	M3R.. 14	16	18	20	22.5	25	28	31.5	35.5	40	45	50	56	63	71	80
50	13,730	15,508	17,666	20,118	23,076	25,647	28,707	31,316	35,260	38,773	43,776	50,191	56,667	63,445	71,952	81,177
60	14,203	16,042	17,800	19,972	22,196	25,114	28,725	32,152	35,398	39,562	43,503	48,67	55,102	61,944	69,885	80,439
70	14,069	15,800	17,609	20,217	22,612	25,528	28,149	31,047	35,342	39,381	44,586	50,311	55,102	61,944	69,885	80,439
80	14,279	16,213	18,347	20,480	23,111	25,848	29,691	32,741	36,111	40,806	45,469	50,298	56,945	62,149	69,866	78,824
90	14,216	16,150	18,063	20,168	23,121	25,554	29,354	33,065	35,957	40,36	45,741	49,653	56,945	63,953	71,752	81,111

Size / Größe	M4R.. 90	100	112	125	140	160	180	200	225	250	280	315
50	88,583	97,191	109,38	124,60	137,98	153,33	174,70	194,13	217,29	247,44	280,37	313,82
60	91,441	101,44	108,69	122,76	135,92	153,52	170,61	190,96	219,58	244,02	280,87	320,55
70	87,909	99,254	110,31	126,65	138,49	158,31	177,20	200,07	223,83	252,58	282,59	319,05
80	89,899	102,08	114,26	128,30	143,60	159,71	179,50	202,57	228,70	258,44	279,26	315,56
90	89,457	99,981	110,6	123,06	137,63	153,68	173,98	199,45	223,14	250,61	283,01	318,79

Size / Größe	M5R.. 355	400	450	500	560	630	710	800	900	1000	1120	1250	1400	1600	1800
50	340,73	390,00	431,59	490,44	541,53	628,75	694,25	792,23	880,47	978,58	1116,7	1240,9	1388,9	1581,7	1793,7
60	352,66	391,26	436,87	485,53	560,89	623,37	696,04	768,54	866,45	988,78	1098,9	1230,0	1403,6	1559,8	1795,4
70	348,13	396,59	440,76	487,76	548,90	608,45	684,72	772,66	887,12	977,10	1125,1	1250,3	1398,8	1579,3	1817,8
80	357,23	406,96	452,29	500,52	563,26	633,95	713,42	805,07	898,69	1005,5	1122,4	1266,6	1430,0	1615,9	1763,6
90	351,07	390,18	440,83	492,22	554,93	621,14	694,70	775,68	862,02	979,14	1093,3	1253,3	1411,8	1585,6	1773,9

Nominal Output Torque M_{N2} in kNm *) — Nennmoment M_{N2} in kNm *)

Nominal Ratio i_N — Nennübersetzung i_N

Size / Größe	M3R.. 14	16	18	20	22.5	25	28	31.5	35.5	40	45	50	56	63	71	80
50	31,2	35,3	37,8	34	35,9	38,6	38,8	39	36,4	35,2	35,7	35,8	36,1	36,4	32,1	32,3
60	40,9	46,2	51,2	54,1	54,4	54,8	55,2	55,6	55,9	56,2	56,5	56,9	57,3	57	49,4	50,1
70	62,3	70	78	88,1	89,2	81	81,4	81,8	88	88,5	86,4	84,1	84,6	85,1	85,4	73,5
80	78,1	88,7	100	112	104	104	99,7	105	104	107	107	108	109	99,5	100	95,7
90	96,5	110	123	137	136	137	138	139	140	141	142	133	135	132	126	133

Size / Größe	M4R.. 90	100	112	125	140	160	180	200	225	250	280	315
50	43,8	43,7	44,7	45,9	46,4	44,9	46,5	46,5	44,5	46	46	46
60	65,5	64,4	64,6	70,1	57,2	64,6	71,7	67,8	70,6	70,7	63,8	65,4
70	94,7	94,9	94,9	95	95	95,1	95,2	95,2	95,3	103	103	104
80	113	128	135	130	134	128	135	133	134	120	128	128
90	167	143	142	158	175	173	173	175	178	159	178	177

Size / Größe	M5R.. 355	400	450	500	560	630	710	800	900	1000	1120	1250	1400	1600	1800
50	46,3	46,4	46,4	46,4	46,4	46,5	46,5	46,5	46,6	46,6	46,6	46,8	47,5	46,5	44,3
60	70,1	70,2	70,2	70,3	70,3	70,4	70,4	70,4	70,5	70,5	70,5	70,8	72	72,9	69
70	94,7	94,8	94,8	94,9	94,9	95	95,1	103	103	103	103	104	105	107	91,1
80	119	135	139	139	139	135	135	133	133	135	139	134	136	123	130
90	172	183	147	164	183	183	179	177	177	179	177	178	181	164	165

Maximum torque M_{K2max} is 2 x M_{N2} / Maximaldrehmoment M_{K2max} ist 2 x M_{N2}

*) Calculated with n_1=1000 1/min / Berechnet mit n_1=1000 1/min

70.5 kN*m=51988lbs*ft or 623977lbs*in

Thermal Ratings P_{TH} in kW *) — Wärmegrenzleistungen P_{TH} in kW *)

Nominal Ratio i_N / Ambient Air Temperature — Nennübersetzung i_N / Umgebungstemperatur

Size / Größe	Fan pcs / Lüfter St	M3R.. i_N = 14 ... 45				i_N = 50 ... 80				M4R.. i_N = 90 ... 315				M5R.. i_N = 355 ... 1800			
		20 C°	30 C°	40 C°	50 C°	20 C°	30 C°	40 C°	50 C°	20 C°	30 C°	40 C°	50 C°	20 C°	30 C°	40 C°	50 C°
50	-	131	100	69	38	147	116	85	54	91	70	49	28	65	48	31	14
	1	242	194	146	98	257	210	162	114	-	-	-	-	-	-	-	-
60	-	160	123	85	47	180	142	104	66	113	87	61	35	81	60	39	18
	1	296	237	179	120	316	257	198	139	-	-	-	-	-	-	-	-
70	-	194	148	102	56	218	172	126	80	149	115	80	46	106	78	51	23
	1	358	287	216	145	382	311	240	168	-	-	-	-	-	-	-	-
80	-	228	174	120	66	256	202	148	94	172	132	92	53	122	90	59	27
	1	421	337	254	170	449	365	281	198	-	-	-	-	-	-	-	-
90	-	270	206	142	79	303	239	175	111	208	160	112	64	148	109	71	33
	1	499	400	301	202	532	433	333	234	-	-	-	-	-	-	-	-

*) Calculated with n_1=1500 1/min / Berechnet mit n_1=1500 1/min

Dimensions / Abmessungen
M3R.. 3.7-
M4R.. 3.9-
M5R.. 3.11-

Manufacturer reserves the right to alteration. *Recht auf Änderungen vorbehalten.*

Size Größe	Allowed Rotational Speed $n1_{max}$ in r/min *) Zulässige Drehzahlen $n1_{max}$ in r/min *)															
	Nominal Ratio i_N Nennübersetzung i_N															
M3R..	**14**	**16**	**18**	**20**	**22.5**	**25**	**28**	**31.5**	**35.5**	**40**	**45**	**50**	**56**	**63**	**71**	**80**
50	2059	2059	2059	2059	2297	2297	2297	2297	2297	2474	2474	2474	2474	3000	3000	3000
60	1845	1845	1845	1845	1845	2010	2010	2010	2010	2010	2144	2419	2144	2680	2680	2680
70	1517	1517	1517	1517	1694	1787	1787	1787	1787	2010	2010	2010	2010	2474	2474	2474
80	1517	1517	1517	1517	1517	1694	1787	1787	1787	1787	2010	2010	2010	2010	2474	2474
90	1340	1340	1340	1340	1340	1340	1340	1340	1340	1340	1340	1462	1462	1462	2010	2010

M4R..	**90**	**100**	**112**	**125**	**140**	**160**	**180**	**200**	**225**	**250**	**280**	**315**
50	2924	2924	2924	2924	3000	3000	3000	3000	3000	3000	3000	3000
60	2924	2924	2924	2924	3000	3000	3000	3000	3000	3000	3000	3000
70	2297	2297	2297	2297	2474	2474	2474	2474	2474	2474	3000	3000
80	2297	2297	2297	2297	2297	2474	2474	2474	2474	2474	3000	3000
90	2010	2010	2144	2144	2144	2144	2144	2144	2144	2144	2680	2680

M5R..	**355**	**400**	**450**	**500**	**560**	**630**	**710**	**800**	**900**	**1000**	**1120**	**1250**	**1400**	**1600**	**1800**
50	3000	3000	3000	3000	3000	3000	3000	3000	3000	3000	3000	3000	3000	3000	3000
60	3000	3000	3000	3000	3000	3000	3000	3000	3000	3000	3000	3000	3000	3000	3000
70	3000	3000	3000	3000	3000	3000	3000	3000	3000	3000	3000	3000	3000	3000	3000
80	3000	3000	3000	3000	3000	3000	3000	3000	3000	3000	3000	3000	3000	3000	3000
90	2924	2924	3000	3000	3000	3000	3000	3000	3000	3000	3000	3000	3000	3000	3000

*) With splash lubrication / Mit Tauchschmierung

Dimensions / Abmessungen
M3R.. 3.7-
M4R.. 3.9-
M5R.. 3.11-

Continuous allowed External Loads F_R, F_A

Zulässige kontinuierliche Außenlasten F_R, F_A

Helical and Bevel Helical Gear Units, M.P.. 50-90 and M.R.. 50-90

Low speed shaft (LSS) end

1. Determining the allowed radial force F_R

$$F_R = \frac{F_{RN}}{F_S} \cdot K_Y$$

F_R = the allowed actual radial force.

F_{RN} = the allowed nominal radial force in the middle of the shaft end.

F_S = service factor (see Gear Unit selection, page 1.11)

K_Y = the effect of the radial force location.

2. Gear Units with Horizontal Solid LSS (Types: M.PS, M.RS)

2.1 Radial external forces

Stirnrad und Kegelstirnradgetriebe, M.P.. 50-90 und M.R.. 50-90

Abtriebswellenende (LSS)

1. Bestimmung der zulässigen Radialkraft F_R

F_R = zulässige tatsächliche Radialkraft

F_{RN} = zulässige nominelle Radialkraft in der Mitte des Wellenendes.

F_S = Anwendungsfaktor (siehe Auswahl des Getriebes, Seite 1.11)

K_Y = Einfluss der Lage der Radialkraft.

2. Getriebe mit horizontaler Vollwelle LSS (Typen: M.PS, M.RS)

2.1 Äussere Radialkraft

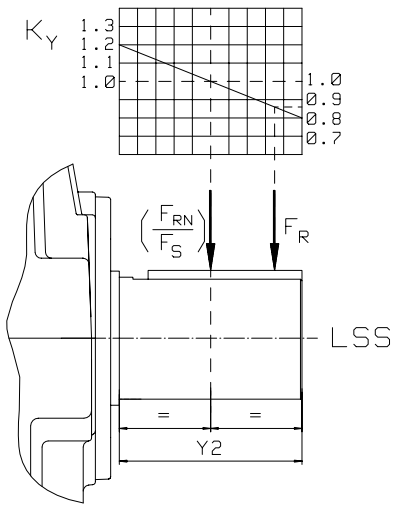

Picture 1: The effect of the radial force location.

Bild 1: Einfluss der Lage der Radialkraft.

Gear Unit Dimensions, type M5RSF M5RHF M5RHT

Getriebeabmessungen, Typ M5RSF M5RHF M5RHT

Foot Mounting Face machined for foot mounting, type M5RSF M5RHF

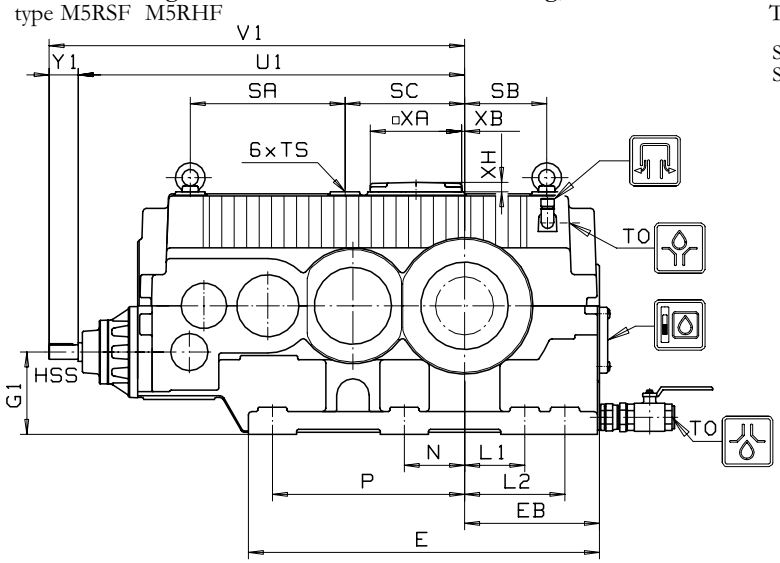

Bearbeitete Fußfläche für Fußausführung, Typ M5RSF M5RHF

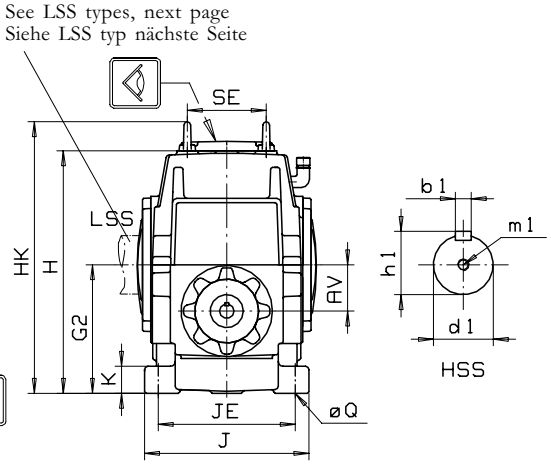

Torque Arm Mounting Bracket with unmachined foot plane, type M5RHT

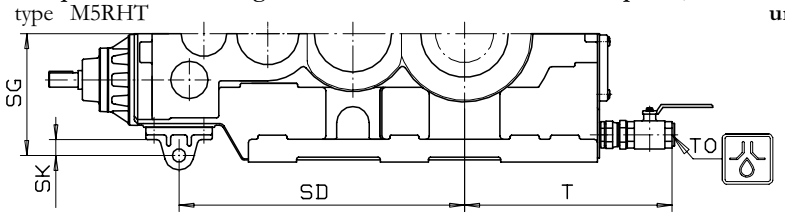

Befestigung für Drehmomentenstütze mit unbearbeiteter Fußfläche, Typ M5RHT

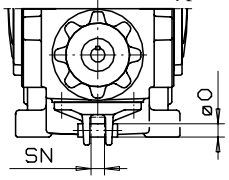

Technical Data page 2.5-
Technische Daten Seite 2.5-

Size Größe	Housing Dimensions in mm / Gehäuseabmessungen in mm																		Foot Mounting Fußausführung Type/Typ M5RSF M5RHF					
	AV	E	EB	G1	G2	H	HK	J	K	SA	SB	SC	SE	TS	TO	T	XA	XB	XH	JE	L1	L2	N	P	Q
50	111.6	846	325	198.4	310	585	656	396	65	373	198	288	188	M20x35	R1½	500	220	7	30	330	148	245	145	463	28
60	111.6	974	373	238.4	350	665	755	460	73	420	245	325	216	M24x42	R1½	548	220	40	30	378	170	300	168	533	35
70	148.7	1135	427	251.3	400	760	850	506	82	475	292	418	250	M24x42	R1½	602	260	92	30	416	194	322	190	633	35
80	148.7	1230	470	291.3	440	835	944	552	90	541	328	395	280	M30x53	R1½	645	260	62	30	454	209	369	209	666	42
90	151.4	1324	512	328.6	480	910	1019	584	97	531	361	525	305	M30x53	R1½	687	260	192	30	480	228	418	228	719	42

Size Größe	HSS Dimensions in mm / HSS Abmessungen in mm													Torque Arm Mounting Bracket Befestigung für Drehmomentenstütze Type/Typ M5RHT					Weight Gewicht	Oil Capacity/Ölmenge Splash lubrication Tauchschmierung	Oil Capacity/Ölmenge Pressure lubrication Druckschmierung
		i_N = 355 ... 900						i_N = 1000 ... 1800													
	U1	Y1	V1	d1	b1	h1	m1	Y1	V1	d1	b1	h1	m1	O	SD	SG	SK	SN	kg	l	l
50	931	70	1001	35k6	10h9	38	M12	70	1001	30k6	8h9	33	M10	32	693	294	38	32	900	57	57
60	1018	70	1088	35k6	10h9	38	M12	70	1088	30k6	8h9	33	M10	45	775	308	52	45	1295	83	83
70	1198	95	1293	45k6	14h9	48.5	M16	70	1268	35k6	10h9	38	M12	45	928	380	52	45	1820	125	125
80	1248	95	1343	45k6	14h9	48.5	M16	70	1318	35k6	10h9	38	M12	45	978	380	52	45	2270	160	160
90	1377	95	1472	45k6	14h9	48.5	M16	70	1447	35k6	10h9	38	M12	45	1107	389	52	45	2980	208	208

Shaft Positions

Wellenlagen

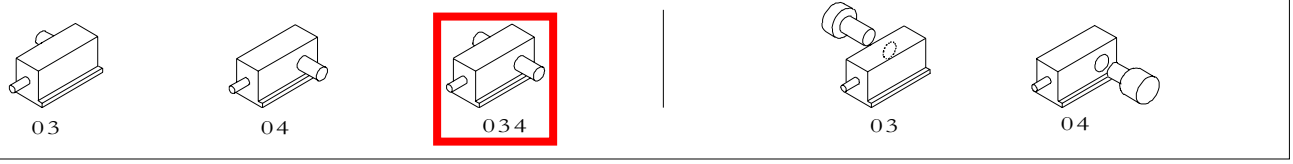

Manufacturer reserves the right to alteration.

Recht auf Änderungen vorbehalten.

LSS types / LSS Typen

Type/Typ
M5RSF

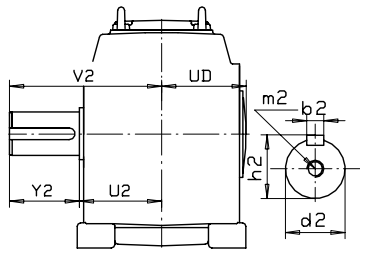

Solid Shaft
Vollwelle

Type/Typ
M5RHF, M5RHT

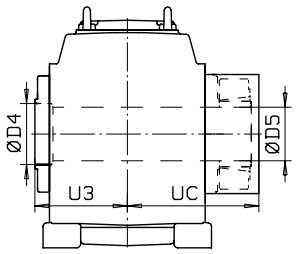

Hollow Shaft, Shrink Disk, page 4.3-
Hohlwelle, Schrumpfscheibe, Seite 4.3-

Type/Typ
M5RHF, M5RHT

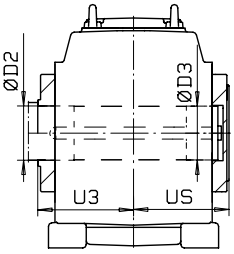

Hollow Shaft, Key Connection, page 4.7-
Hohlwelle, Paßfederverbindung, Seite 4.7-

Common Accessories, see section 4 / Allgemeine Ausrüstungsoptionen, siehe Teil 4

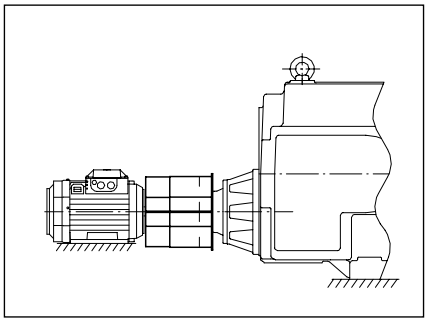

Coupling Guard, page 4.23
Kupplungschutz, Seite 4.23

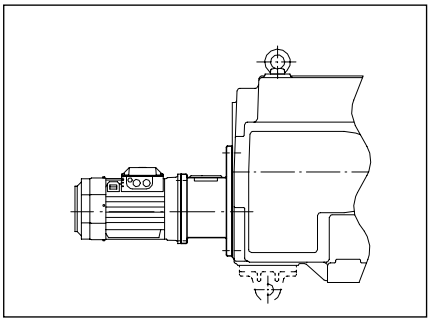

Motor Flange, page 4.24
Motorflansch, Seite 4.24

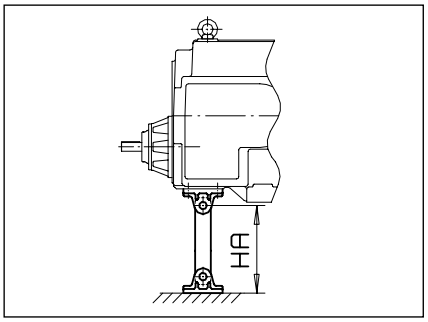

Torque Arm, page 4.23
Drehmomentenstange, Seite 4.23

Size / Größe	LSS Dimensions in mm / LSS Abmessungen in mm															Common Accessories / Allgemeine Ausrüstungsoptionen	
	Solid Shaft / Vollwelle								Hollow Shaft / Hohlwelle								
	d2	b2	h2	m2	Y2	U2	V2	UD	U3	UC	D4	D5	US	D2	D3	HAmin	HAmax
50	140m6	36h9	148	M30	200	232	432	216	228	336	155	154	232	150	149	125	950
60	160m6	40h9	169	M30	240	261	501	245	255	386	180	179	259	170	169	175	1070
70	180m6	45h9	190	M30	240	281	521	274	284	422	190	189	288	190	189	175	1070
80	200m6	45h9	210	+)	280	315	595	290	302	453	210	209	306	210	209	175	1070
90	220m6	50h9	231	+)	280	337	617	314	324	501	250	249	328	240	239	175	1070

In case of Through going LSS, same dimensions apply. +) M20,2x180° distance/Distanz 0.6xd2
Gleiche Abmessungen für Abtriebswelle beidseitig.

Other available Accessories, see section 4 / Weitere verfügbare Ausrüstungsoptionen, siehe Teil 4

Lubrication / Schmierung	Page / Seite
Lubrication Unit / Schmiereinheit	4.13
Shaft End Pump / Wellenendenpumpe	4.17
Central Lubrication System connections / Ausrüstung für Zentrales Schmiersystem	4.18
Oil Heating System / Ölheizung	4.19

Coupled Equipment / Anschlußelemente	Page / Seite
Couplings / Kupplungen	*)
Back Stop / Rücklaufsperre	4.25
Belt Drive / Keilriemenantrieb	4.24

See also modifications, page 4.27 ... 4.28
Siehe auch Modifikationen, Seite 4.27 ... 4.28

Optional Seal Arrangements / Dichtungssysteme		
Lip Seal on HSS and LSS / Radialwellendichtring für HSS und LSS	1)	4.22

1) Standard Solution for this Gear Unit type
***)** Contact SEW-EURODRIVE

1) Standard in diesem Getriebetyp
***)** Sprechen Sie SEW-EURODRIVE an

3.4 Mounting positions, shaft positions and directions of rotation

The shaft positions (0, 1, 2, 3, 4) and directions of rotation shown in the following figures apply to output shafts (LSS) of the types **solid shaft and hollow shaft**. For other shaft positions or gear units with backstop, contact SEW-EURODRIVE.

The following mounting positions (for a detailed overview, see → Sec. "Mounting Positions") and shaft positions (0, 1, 2, 3, 4) are possible:

Mounting position, shaft positions M.P..

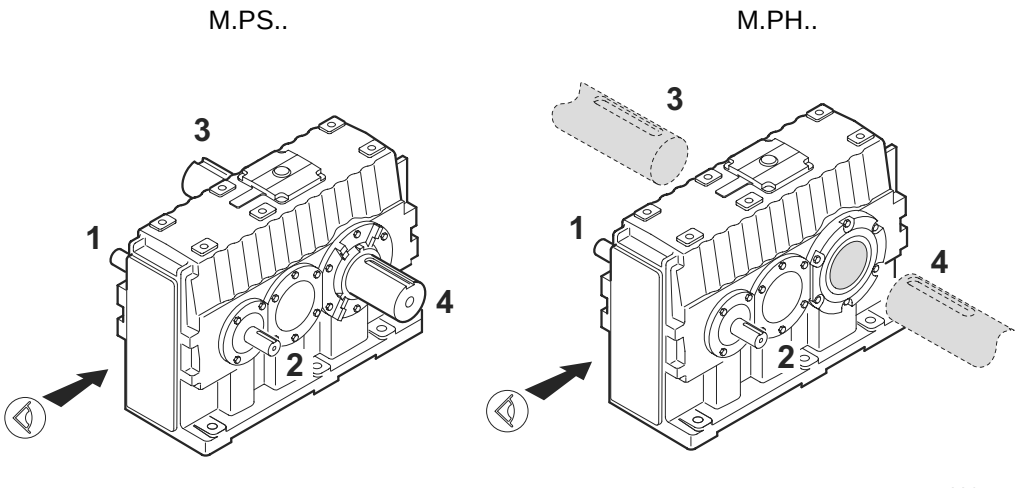

Figure 11: Mounting positions and shaft positions M.P..

Mounting position, shaft positions M.R..

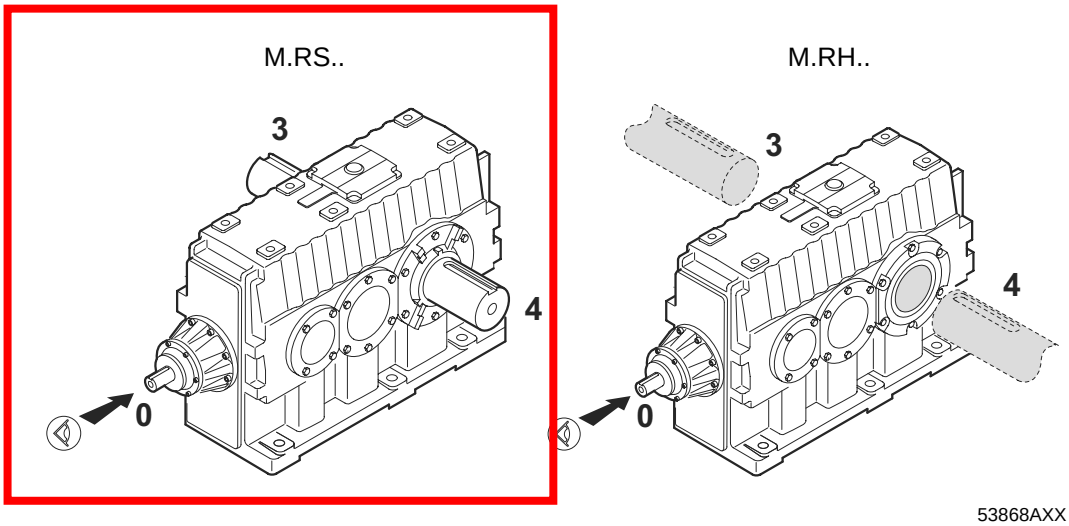

Figure 12: Mounting positions and shaft positions M.R..

3.2 Basic design of the M..R.. series

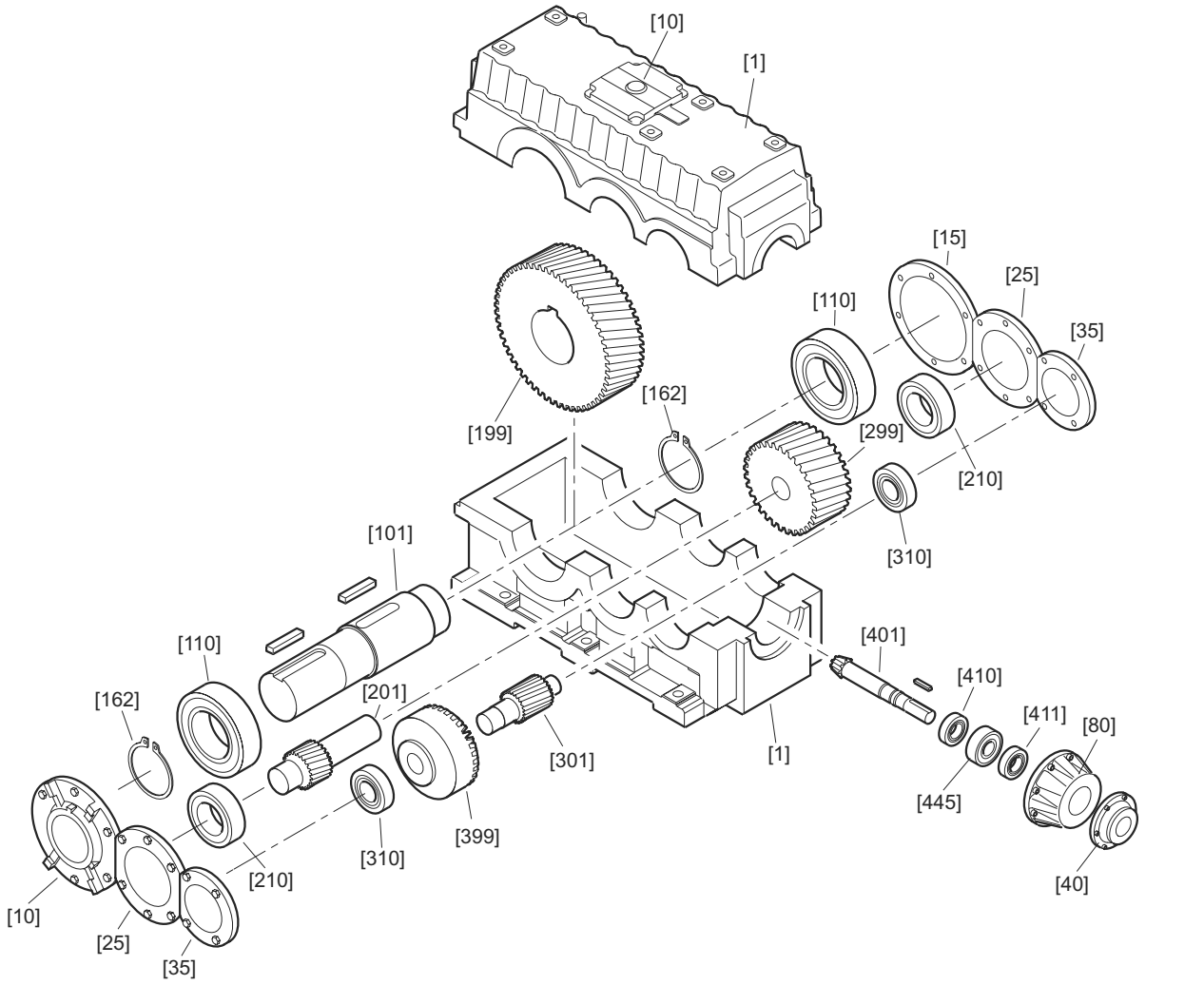

53382AXX

Figure 9: Basic design of the M..R.. series

[1]	Housing	[40]	Cover	[199]	Gear wheel	[399]	Bevel wheel
[10]	Cover	[70]	Inspection cover	[201]	Pinion	[401]	Bevel pinion
[15]	Cover	[100]	LSS shaft	[210]	Bearing	[410]	Bearing
[25]	Cover	[110]	Bearing	[299]	Gear wheel	[411]	Bearing
[35]	Cover	[162]	Retaining ring	[301]	Pinion	[449]	Bushing

8 Inspection and Maintenance

8.1 Inspection and maintenance intervals

Interval	What to do?
• Daily	• Check the housing temperature: – with mineral oil: max 90 °C – with synthetic oil: max. 100 °C • Check gear unit noise • Check the gear unit for signs of leakage
• After 500 - 800 hours of operation	• First oil change after initial startup
• After 500 hours of operation	• Check the oil level, refill oil (→ Sec. "Nameplate") if necessary
• Every 3000 hours of operation, at least every 6 months	• Check the oil: If the gear unit is operated outdoors or in humid conditions, check the water content of the oil. The water content must not exceed 0.03 % (300 ppm). • Regrease labyrinth seals. Option for gear unit. Standard gear unit supplied without grease nipple. Use about 30 g grease per grease nipple. • Clean the breather plug
• Depending on the operating conditions, at the latest every 12 months	• Change the mineral oil (→ Sec. "Inspection and maintenance of the gear unit") • Check whether retaining screws are tightly secured • Check contamination and condition of the oil/air cooling system • Check the condition of the oil/water cooling system • Clean oil filter, replace filter element if necessary
• Depending on the operating conditions, at the latest every 3 years	• Change synthetic oil (→ Sec. "Inspection and maintenance of the gear unit")

• Varying (depending on external factors)	• Repair or renew the surface/anticorrosion coating
	• Clean the gearcase surface and fan
	• Check the oil heater:
	  • Are all connection cables and terminals tightened securely and free from corrosion?
	  • Clean incrusted elements (such as the heating element) and replace, if required (→ Sec. "Inspection and maintenance of the gear unit")

8.3 Inspection and maintenance of the gear unit

- **Do not mix different synthetic lubricants and do not mix synthetic with mineral lubricants!**
- **For positions of the oil level plug, the drain plug, the breather plug and the oil sight glass, refer to Sec. "Mounting Positions."**

Checking the oil level

1. **Disconnect the motor from voltage supply and secure it to prevent unintentional restart!**

   Wait until the gear unit has cooled off – Danger of burns!

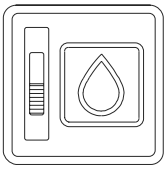

2. For gear units with oil level glass: Visually check correct oil level (= middle of oil sight glass)

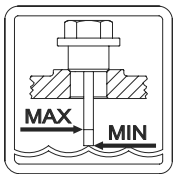

3. For gear units with oil dipstick (option):
   - Unscrew the oil dipstick and remove it. Clean the dipstick and re-insert it into the gear unit (do **not** screw in tightly!).
   - Remove dipstick again and check oil level. Correct if necessary: the oil level is correct when it is between the oil level mark (= maximum oil level) and the end of the dipstick (= minimum oil level)

Checking the oil

1. **Disconnect the motor from voltage supply and secure it to prevent unintentional restart!**

   Wait until the gear unit has cooled off – Danger of burns!
2. Remove some oil from the oil drain plug
3. Check the oil consistency
   - Viscosity
   - If you can see that the oil is heavily contaminated, we recommend to change the oil disregarding the service intervals specified in Sec. "Service and maintenance intervals."

Changing the oil

When changing the oil, clean the gearcase thoroughly to remove oil residues and abrasion. Use the same oil grade as for the operation of the gear unit.

1. **Disconnect the motor from voltage supply and secure it to prevent unintentional restart!**

   Wait until the gear unit has cooled off – Danger of burns! If your gear unit is equipped with an oil expansion tank, let the gear unit cool off until it reaches ambient temperature. The reason is that there might still be oil in the oil expansion tank which might leak through the oil filling hole!

   Note: The gear unit must still be warm because the high viscosity of cold oil will make it more difficult to drain the oil correctly.
2. Place a container under the oil drain plug.
3. Remove oil filling plug, breather plug and oil drain plugs. When using a steel oil expansion tank, also remove the air outlet screw on the air expansion tank. To drain the oil completely, blow air through the breather into the oil expansion tank. As a result, the rubber membrane lowers and forces the remaining oil out. The lowering membrane compensates the pressure, which facilitates filling the new oil.
4. Drain the oil completely.
5. Reinstall the oil drain plugs.

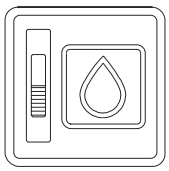

6. Use a funnel to fill the oil (filter mesh max. 25 µm). Fill new oil of the same type as the old oil via the oil filling plug (if you want to change the oil type, contact our customer service first).
   - Fill the oil according to the volume specified on the nameplate (→ Sec. "Nameplate"). The oil volume specified on the nameplate is an approximate value. **The marks on the oil level glass (option: oil dipstick) are decisive for the oil level.**
   - Check whether the oil level is correct using the oil dipstick.
7. Reinstall the oil filling plug. If your gear unit is equipped with a steel oil expansion tank, also screw in the air outlet screw.
8. Mount the breather plug.
9. Clean the oil filter, replace the filter element if necessary (when using an external oil/air or oil/water cooling system).

If you remove the housing cover, you must apply new sealing compound to the sealing surface. Else, the tightness of the gear unit is not guaranteed! Contact SEW-EURODRIVE in this case!

Cleaning the oil heater

Incrustation on the oil heater caused by oil must be removed. Remove the oil heater for this purpose.

The oil heater must be deactivated before draining the oil. The reason is that the hot oil heater might ignite the evaporating oil.

8.3 Inspection and maintenance of the gear unit

- **Do not mix different synthetic lubricants and do not mix synthetic with mineral lubricants!**
- **For positions of the oil level plug, the drain plug, the breather plug and the oil sight glass, refer to Sec. "Mounting Positions."**

Checking the oil level

1. **Disconnect the motor from voltage supply and secure it to prevent unintentional restart!**

   Wait until the gear unit has cooled off – Danger of burns!

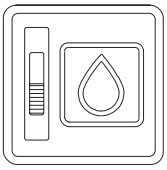

2. For gear units with oil level glass: Visually check correct oil level (= middle of oil sight glass)

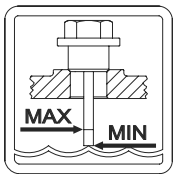

3. For gear units with oil dipstick (option):
   - Unscrew the oil dipstick and remove it. Clean the dipstick and re-insert it into the gear unit (do **not** screw in tightly!).
   - Remove dipstick again and check oil level. Correct if necessary: the oil level is correct when it is between the oil level mark (= maximum oil level) and the end of the dipstick (= minimum oil level)

Checking the oil

1. **Disconnect the motor from voltage supply and secure it to prevent unintentional restart!**

   Wait until the gear unit has cooled off – Danger of burns!
2. Remove some oil from the oil drain plug
3. Check the oil consistency
   - Viscosity
   - If you can see that the oil is heavily contaminated, we recommend to change the oil disregarding the service intervals specified in Sec. "Service and maintenance intervals."

Changing the oil

When changing the oil, clean the gearcase thoroughly to remove oil residues and abrasion. Use the same oil grade as for the operation of the gear unit.

1. **Disconnect the motor from voltage supply and secure it to prevent unintentional restart!**

   Wait until the gear unit has cooled off – Danger of burns! If your gear unit is equipped with an oil expansion tank, let the gear unit cool off until it reaches ambient temperature. The reason is that there might still be oil in the oil expansion tank which might leak through the oil filling hole!

   Note: The gear unit must still be warm because the high viscosity of cold oil will make it more difficult to drain the oil correctly.
2. Place a container under the oil drain plug.
3. Remove oil filling plug, breather plug and oil drain plugs. When using a steel oil expansion tank, also remove the air outlet screw on the air expansion tank. To drain the oil completely, blow air through the breather into the oil expansion tank. As a result, the rubber membrane lowers and forces the remaining oil out. The lowering membrane compensates the pressure, which facilitates filling the new oil.
4. Drain the oil completely.
5. Reinstall the oil drain plugs.

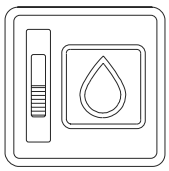

6. Use a funnel to fill the oil (filter mesh max. 25 µm). Fill new oil of the same type as the old oil via the oil filling plug (if you want to change the oil type, contact our customer service first).
   - Fill the oil according to the volume specified on the nameplate (→ Sec. "Nameplate"). The oil volume specified on the nameplate is an approximate value. **The marks on the oil level glass (option: oil dipstick) are decisive for the oil level.**
   - Check whether the oil level is correct using the oil dipstick.
7. Reinstall the oil filling plug. If your gear unit is equipped with a steel oil expansion tank, also screw in the air outlet screw.
8. Mount the breather plug.
9. Clean the oil filter, replace the filter element if necessary (when using an external oil/air or oil/water cooling system).

If you remove the housing cover, you must apply new sealing compound to the sealing surface. Else, the tightness of the gear unit is not guaranteed! Contact SEW-EURODRIVE in this case!

Cleaning the oil heater

Incrustation on the oil heater caused by oil must be removed. Remove the oil heater for this purpose.

The oil heater must be deactivated before draining the oil. The reason is that the hot oil heater might ignite the evaporating oil.

10 Symbols and Mounting Positions

10.1 Symbols used

The following table shows which symbols are used in the subsequent figures and what they mean.

Symbol	Meaning
	Breather plug
	Inspection opening
	Oil filling plug
	Oil drain plug/oil drain valve
	Oil level glass

The positions of the elements are exemplary and cover most of the cases. For exact positions, please refer to the corresponding dimension drawing.

10.2 Symbols and Mounting Positions of M.P.. gear units

Mounting position M.P..

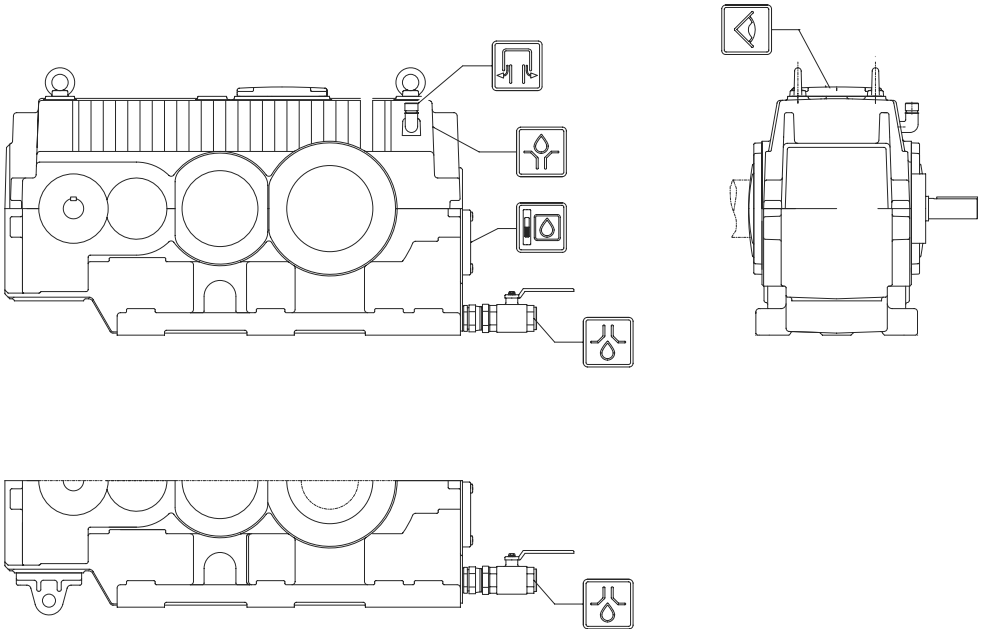

53520AXX

Figure 74: Mounting positions of M.P.. gear units

10.3 Symbols and mounting positions of M.R.. gear units

Mounting position M.R..

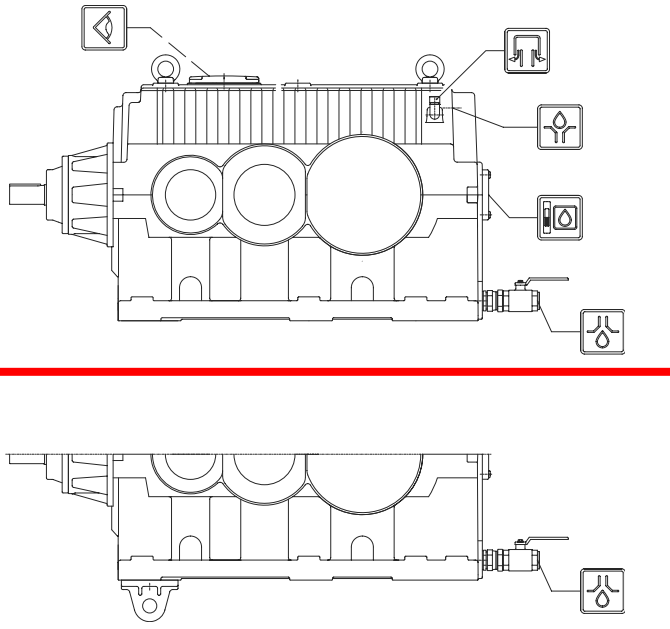

53523AXX

Figure 75: Mounting positions of M.R.. gear units

11 Lubricants

11.1 Guideline for oil and grease selection

Lubricating oils

This instruction applies to the following conditions:

- Ambient temperature in the range of -30 °C…+40 °C
- Actual max. pitch line velocity less than 35 m/s
- All lubricating methods with oil: splash, bath and pressure lubrication

In addition to the required viscosity class ISO VG, the oil must contain anti-wear, anti-rust, anti-oxidant and antifoam additives. The FZG stage should be at least 12 according to DIN 51354.

The oil must also contain EP additivies. If synthetic oils are selected due to operating temperatures or oil change intervals, SEW-EURODRIVE recommends polyalfaolefin based (PAO) oil.

Mineral oils

Lubricating oil standards

Lubricating oils are grouped in ISO VG viscosity classes according to standards ISO 3448 and DIN 51519.

ISO VG class	ISO 6743-6 designation	DIN 51517-3 designation	AGMA 9005-D94 designation
150	ISO-L-CKC 150	DIN 51517 CLP 150	AGMA 4 EP
220	ISO-L-CKC 220	DIN 51517 CLP 220	AGMA 5 EP
320	ISO-L-CKC 320	DIN 51517 CLP 320	AGMA 6 EP
460	ISO-L-CKC 460	DIN 51517 CLP 460	AGMA 7 EP
680	ISO-L-CKC 680	DIN 51517 CLP 680	AGMA 8 EP

Containing EP additives

Selection of viscosity class ISO VG (40 °C)

The maximum operating temperature of mineral oil is 80 °C. Table 1 indicates the required ISO VG class of the oil and the max. lubricating temperature T_L of the oil.

Selection of the lubricating oil

Mineral oil (→ Tabel in sec. "Overview of lubricants for M.. industrial gear units/Mineral lubricants")

When the gear unit is located outdoors, use an oil heater in the following cases:

- With splash or bath lubrication when the starting temperature is less than the pour point of the oil
- With pressure lubrication when the starting oil viscosity is greater than 2000 cSt.

Slow speed gear units

When the pitch line velocity of the slowest stage is under 1 m/s (n_2 < 15 1/min), the gear unit operates in boundary lubrication area.

It is recommended to use:

- mineral oils with EP- and anti-wear additives
- running viscosity should be ≥ 100 cSt
- the cleanliness of the oil and the oil sump must be ensured.

Oil selection, ISO VG (40 °C) class

Number of stages in the gear unit	Splash or bath lubrication[1] ISO VG (40 °C)/T_L	Pres. lubrication NO ext. cooler[1] ISO VG (40 °C)/T_L	Pres. lubrication ext. cooler, spray dose, splash or bath lubrication[2] ISO VG (40 °C)/T_L	Pres. lubrication ext. cooler, oil led to gearmeshes and bearings[3] ISO VG (40 °C)/T_L	Note
2	320/90	320/90	220/70	220/60	Synthetic oil
2	320/80	320/80	220/70	220/60	Mineral oil
3	460/80	460/80	320/70	320/60	Mineral oil Synthetic oil
4	460/70	460/70	460/70	320/60	ONLY mineral oil
5	460/70	460/70	460/70	320/60	ONLY mineral oil

1 The oil temperature T_L is measured from the oil surface)

2 The oil temperature going into the gear unit is different that lubricates the gearmeshes and bearings. NO direct piping to the gearmeshes and bearings is made. The oil temperature when going into the gear unit is set in the range of 45 °C …55 °C

3 The oil is led directly to the gearmeshes and bearings via direct piping. The oil temperature when going into the gear unit is set in the range of 45 °C … 55 °C

T_L = Max. lubricating temperature of the oil which lubricates the gearmeshes and bearings (Celcius)

ISO VG class	AGMA number	Company	Oil	Viscosity cSt / 40 °C	Pour point °C
320	6EP	Aral	Degol BG320	320	–18
		BP	Energol GR-XP320	305	–24
		Castrol	Alpha SP320	320	–21
		Castrol	Alphamax 320	320	–18
		Chevron	Industrial Oil EP320	320	–9
		Dea	Falcon CLP320	320	–18
		Esso	Spartan EP320	332	–27
		Exxon	Spartan EP320	332	–27
		Fuchs	Renolin CLP320 Plus	323	–21
		Gulf	Gulf EP Lubricant HD320	300	–12
		Klüber	Klüberoil GEM 1-320	320	–15
		Kuwait	Q8 Goya 320	320	–18
		Mobil	Mobilgear 632	304	–18
		Mobil	Mobilgear XMP 320	320	–18
		Molub-Alloy	MA-90 / 320	320	–15
		Neste	Vaihteisto 320 EP	305	–24
		Nynäs	Nynäs GL 320	320	–12
		Optimol	Optigear BM320	338	–15
		Petro Canada	Ultima EP320	320	–21
		Shell	Omala Oil F320	320	–18
		Texaco	Meropa 320	304	–18
		Total	Carter EP320	320	–12
		Tribol	Tribol 1100 / 320	317	–23
460	7EP	Aral	Degol BG460	460	–18
		BP	Energol GR-XP460	450	–15
		Castrol	Alpha SP460	460	–6
		Castrol	Alphamax 460	460	–15
		Chevron	Industrial Oil EP460	460	–15
		Dea	Falcon CLP460	460	–15
		Esso	Spartan EP460	459	–18
		Exxon	Spartan EP460	459	–18
		Fuchs	Renolin CLP460 Plus	458	–12
		Gulf	Gulf EP Lubricant HD460	480	–15
		Klüber	Klüberoil GEM 1-460	480	–15
		Kuwait	Q8 Goya 460	460	–15
		Mobil	Mobilgear 634	437	–6
		Mobil	Mobilgear XMP 460	460	–12
		Molub-Alloy	MA-140 / 460	460	–15
		Neste	Vaihteisto 460 EP	450	–15
		Optimol	Optigear BM460	490	–12
		Petro Canada	Ultima EP460	452	–15
		Shell	Omala Oil F460	460	–15
		Texaco	Meropa 460	437	–15
		Total	Carter EP460	460	–12
		Tribol	Tribol 1100 / 460	464	–21

11.4 Lubricant fill quantities

The specified fill quantities are guide values. The precise values vary depending on the gear ratio.

M.P..

Gear unit size M.P..	Lubrication type	Oil volume [l]		
		Two stages M2P..	Three stages M3P..	Four stages M4P..
50	Splash Pressure	44 38	57 32	57 57
60	Splash Pressure	48 41	83 50	83 83
70	Splash Pressure	74 64	125 73	125 125
80	Splash Pressure	89 79	160 97	160 160
90	Splash Pressure	118 105	208 123	208 208

M.R..

Gear unit size M.R..	Lubrication type	Oil volume [l]		
		Three stages M3R..	Four stages M4R..	Five stages M5R..
50	Splash Pressure	62 38	58 36	57 35
60	Splash Pressure	92 41	85 38	83 37
70	Splash Pressure	144 64	128 57	125 56
80	Splash Pressure	185 79	164 70	160 68
90	Splash Pressure	227 105	213 99	208 96

When using pressure lubrication, it is essential to observe the specifications on the nameplate and in the order-specific documentation!

Description :
ELECTRICAL MOTOR 15 HP, 575 V, 254TC, 1800 RPM
C-FLANGE, INVERTER DUTY 10:1
CLASS1, DIVISION 2, PREMIUM EFFICIENCY

Trade Name :
Teco Westinghouse

Model no :
PDH01545C (15HP, 575V, 1800 RPM)

MOTOR PRODUCTS

OPTIM® TEFC

PREMIUM EFFICIENCY
TEFC SEVERE DUTY

NEMA Premium

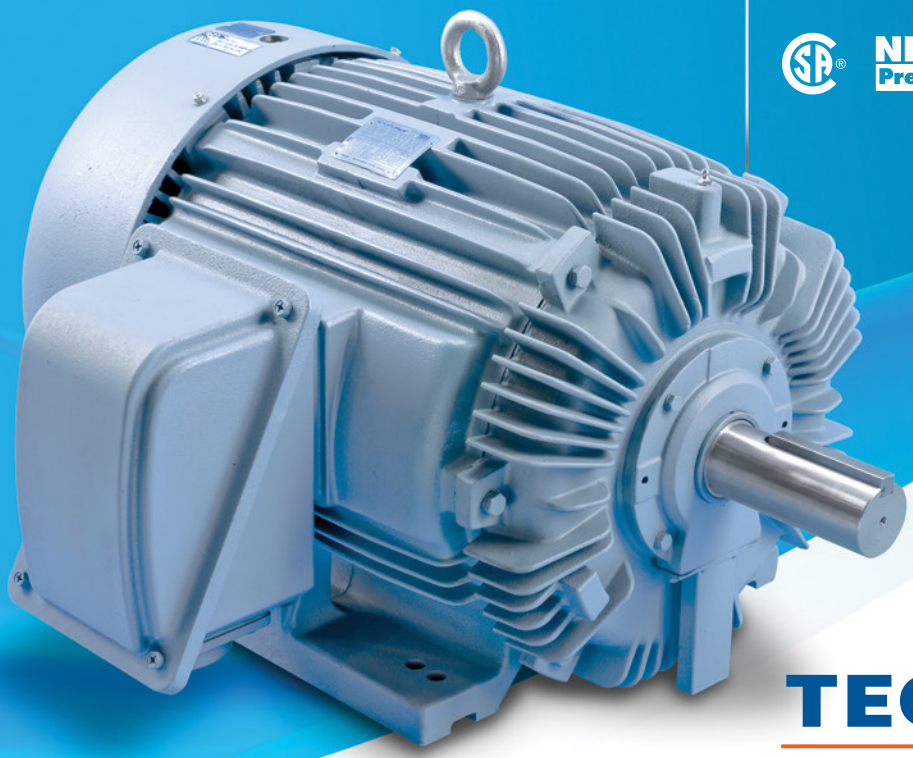

TECO Westinghouse
MOTORS (CANADA) INC.

OPTIM® TEFC

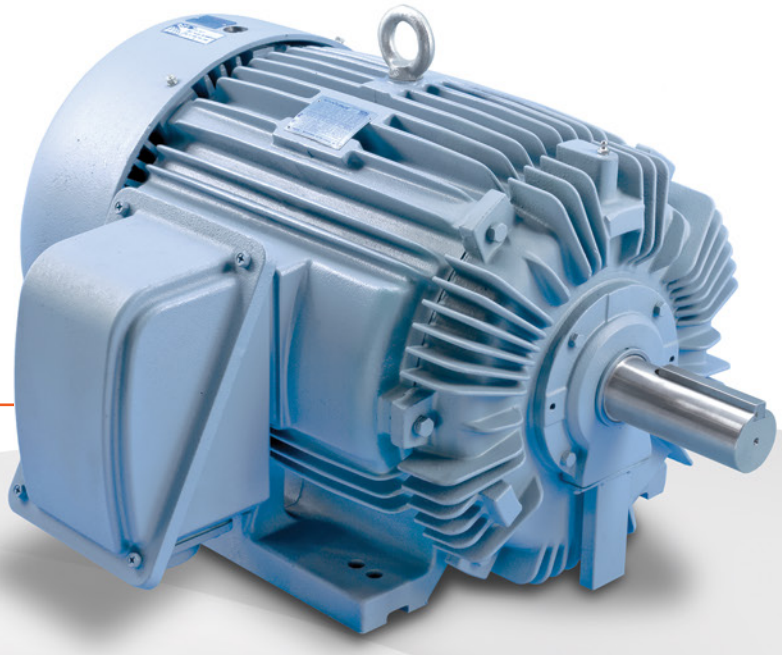

PREMIUM EFFICIENCY
TEFC SEVERE DUTY

The OPTIM® TEFC is a state-of-the-art machine designed to meet the diverse requirements of the modern industrial world. Backed by a three-year warranty, this unit offers premium efficiency ratings that deliver significant life-cycle savings.

Couple your OPTIM® TEFC with our TECO VFD's for energy savings & speed control. TECO-Westinghouse offers a variety of industrial and commercial drive solutions.

PRODUCT FEATURES

- Available from 1-800HP; 2, 4, 6 & 8 Pole
- Totally Enclosed Fan Cooled IP54 Design, IP55 for 5000 Frames and Larger
- NEMA Premium Efficiency
- AC, Three Phase, 60 Hz, 230/460V (Usable on 208V); 460V or 575V. 50 Hz and Other Voltages Under 600V Are Available Upon Request
- Cast-Iron Frame and End Brackets
- Cast-Iron Conduit Box up to 449T Frames; Fabricated Steel Conduit Box 5000 Frames and Larger, Gasketed, F1 Mounting
- Shielded Bearings Frames 140T-280T and Open Bearings with Regreaseable Provisions Frames 280TS, 320T and Larger
- Polyrex EM Grease in All Regreaseable Bearings, Multemp SRL Grease in Sealed Bearings
- Winding RTD's, Space Heaters and Provisions for Bearing RTD's Standard 5000 Frames and Larger
- Dual Drilled Feet for Longer Frames (i.e. 145T also Drilled for 143T) 449T and Below
- -40°C to 40°C Ambient
- CSA Certified for Class I, Division 2, Groups B, C & D (Class I, Zone 2, Groups IIB+H2, IIB and IIA)
- CSA Certified Class II, Division 2 (Class II, Zone 22) available for 440 Frames and larger upon request
- *HPE™ High Pulse Endurance Spike Resistant Wire
- *Meets NEMA MG1 Part 31.4.4.2
- *Speed Ranges up to 10:1 CT, and 20:1 VT. Refer to data sheet for rating specific turn down ratios
- Modifications Available Through Our Kwikmod Program (Contact Your Nearest TWMI Representative for Pricing and Delivery)

* Precautions should be taken to eliminate or reduce voltage spikes and shaft currents that may be imposed on the motor by the VFD as stated per NEMA MG1, Part 31.4.4.

WEST
1-800-661-4023

TECO Westinghouse
MOTORS (CANADA) INC.

EAST
1-800-268-4770

tecowestinghouse.ca

Printed in Canada 05/18

OPTIM® TEFC

FEATURES

MODEL: *OPTIM® TEFC*
TYPE: *AEHH8N, AEHE*

Effective 09-22-14
Supercedes All Previous

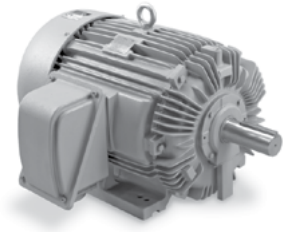

APPLICATIONS

- Fans & Blowers
- Crushers
- Mixers
- Pumps
- Compressor
- Conveyors

PRODUCT OVERVIEW

- 1-800HP
- Totally Enclosed Fan Cooled IP54 Design, IP55 for 5000 Frames and Larger
- 60Hz, 230/460V (Usable on 208V), 460V or 575V
- Horizontal F1 Mount
- 3600, 1800, 1200 & 900 RPM
- *NEMA Premium Efficiency

DESIGN FEATURES

- 1.15 S.F. Sine Wave Power; 1.0 S.F. VFD Power
- Class F Insulation
- Class B Temperature Rise
- Max Elevation 3300ft
- Continuous Duty
- NEMA Design B or C
- 40˚C Ambient

MECHANICAL FEATURES

- Oversized, Double Shielded Vacuum Degassed Ball Bearings Frames 140T-280T and Open Bearings with Regreaseable Provisions Frames 280TS, 320T and Larger
- Polyrex EM Grease in all Regreaseable Bearings, Multemp SRL Grease in Sealed Bearings
- Dynamically Balanced Die-Cast Aluminum Rotor up to 449T Frames; Copper/Copper Alloy 5000 and Larger
- Cast-Iron Frame and End Brackets
- Cast-Iron Conduit Box up to 449T Frames; Fabricated Steel Conduit Box 5000 Frames and Larger, Gasketed, F1 Mounting
- Non-Sparking Plastic Fan up to 449T 4,6 & 8 Pole Motors; Bronze Fan 440TS 2 Pole Motors; Aluminum Fan 5000 Frames and Larger
- Number of Leads 230/460V: 9 Leads 1-5HP; 12 Leads 7.5-125HP; 6 Leads 150 and Above
- Number of Leads 575V: 3 Leads up to 449T; 6 Leads 5000 Frames and Larger
- Solderless Lug Terminals on All Leads
- Grounding Terminal Inside Main Terminal Box, Additional Grounding Terminal on Frame for 5000 Frames and Larger
- Interchangeable F1 and F2 mounting up to 449T
- Dual Drilled Feet for Longer Frames (i.e. 145T also Drilled for 143T) 449T and Below
- Paint System: Phenolic Rust Proof Base with Lacquer Top Coat
- Stainless Steel Nameplate
- Insulated NDE Bearing Standard for 600HP and larger 2 Pole motors
- Rubber Flinger on DE up to 280T; Steel Flinger on Both Ends 280TS and Larger
- **HPE™ High Pulse Endurance Spike Resistant Wire
- 2 Dips Phenolic Alkyd Resin Varnish 140T-440T, 2 Dips Epoxy Resin 5000 Frames and Larger; Spray Enamel Top Coat on all Frames
- Bi-Directional Rotation Except 3600RPM Motors 5000 Frames and Larger Which are CW From NDE
- Winding RTD's, Space Heaters and Provisions for Bearing RTD's Standard 5000 Frames and Larger

OTHER FEATURES

- *CSA Certified for Class I, Division II, Groups B, C and D and Class I, Zone 2, Groups IIB+H2, IIB and IIA
- **Inverter Duty Speed Range 10:1 CT and 20:1 VT up to 300HP; 3:1 CT and 20:1 VT 301-500HP
- **Meets NEMA MG1 Part 31.4.4.2
- ABS Type Certified (5000 Frames and Larger)

* Applies to 1-500HP Only
** Precautions should be taken to eliminate or reduce voltage spikes and shaft currents that may be imposed on the motor by the VFD as stated per NEMA MG1, Part 31.4.4.

TECO Westinghouse MOTORS (CANADA) INC.	
	Date: September 14, 2018

Technical Documentation

PDH0154C

Optim TEFC | AEHH8N

Date: September 14, 2018

TECO Westinghouse
MOTORS (CANADA) INC.

Date: January 17, 2019

Dimensional Drawing

Catalogue	Model	HP	Pole	kW	Rating	Voltage	Hz	RPM
PDH01545C	AEHH8N	15	4	11	Continuous	575 V	60	1800

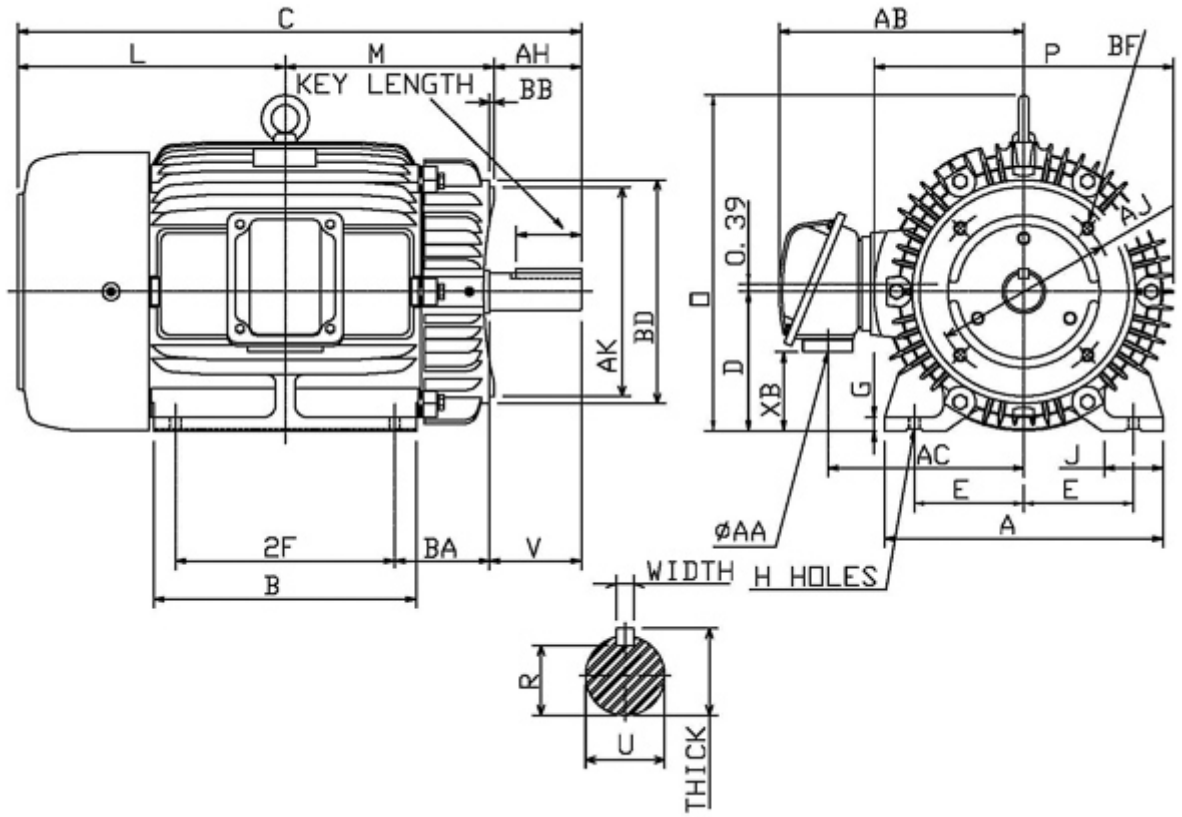

Frame Size	Mounting					A	B	C	CD	D
	E	2F	2F2	H	BA					
254TC	5	8.25		0.53	4.25	11.8	9.85	23.7		6.25

G	J	K	L	M	O	P	T	Key			Keyseat
								Width	Thick	Length	R
0.65	1.95		11.33	8.06	12.83	13.15	1.97	0.375	0.375	2.91	1.416

Terminal Housing				Aux Box		C/D Flange					
AA	AB	AC	XB	AE	AX	BB	AH	AK	BD	AJ	BF
1.25 NPT	11.3	8.86	3.22			0.25	3.75	8.5	9.92	7.25	1/2-13UNC

Shaft Extension			Bearings		Approx. Weight Lbs	SPL dBA/3ft	Ins. Class	S.F.	Drive Method	Dimensions
N-W	U	V	DE	NDE						
4	1.625	3.9	6309ZZ	6307ZZ	312	64	F	1.15	Direct Coupling / Belt Drive	Inches

TECO Westinghouse MOTORS (CANADA) INC.

Date: January 17, 2019

Technical Data Sheet

Motor Type: AEHH8N	Catalogue No: PDH01545C

Nameplate Information

HP	Pole	RPM	Frame	Voltage	Hz	Phase
15	4	1765	254TC	575	60	3
Enclosure	Ins. Class	Service Factor	Time Rating	NEMA Design	Rated Amb.	Rated Altitude
TEFC	F	1.15	Continuous	B	-40 to 40 °C	<3300 ft

Typical Performance

Efficiency (%)				Power Factor (%)		
Full Load		3/4 Load	1/2 Load	Full Load	3/4 Load	1/2 Load
Nom.	Min.					
92.4	91.0	93.0	92.4	88.0	85.0	77.0

Torque				Current (A)		
Full Load (lb-ft)	Locked Rotor (% FLT)	Pull Up (% FLT)	Break Down (% FLT)	No Load	Full Load	Locked Rotor
44.62	245	180	270	4.8	13.8	93

NEMA KVA Code	Inertia (WR^2)			Safe Stall Time (s)		Noise Level Sound Press. dB(A)
	Rotor ($lb\text{-}ft^2$)	NEMA Load ($lb\text{-}ft^2$)	Max. Allowable ($lb\text{-}ft^2$)	Cold	Hot	
G	2.179	75.0	220.0	32	22	64

VFD Duty Information

Speed Range			VFD		S.F.
Constant Torque	Variable Torque	Constant Power	Carrier	Type	
6-60Hz	3-60Hz	60-120Hz	≤ 5 kHz	VPWM or CPWM	1.0 Only

Additional Information

Bearings		Approx. Weight
DE	NDE	lbs
6309ZZ	6307ZZ	312

Hazardous Locations Information

CSA Certified	
Class I, Div 2, Groups B, C & D Class I, Zone 2, Groups IIB+H2, IIB & IIA	
Temp Code (Sinewave / VFD)	T3C / T3B

TECO Westinghouse MOTORS (CANADA) INC.	
	Date: January 17, 2019

Nameplate Drawing

Optim TEFC

TYPE	AEHH8N	CAT. NO.	PDH01545C		
OUTPUT	15 HP 11 kW	FRAME	254TC	TEFC	
R.P.M.	1765	POLE	4	INS.	F
VOLTS	575	PHASE	3	Hz	60
AMPS	13.8	CODE	G	S.F.	1.15
AMBIENT	40 °C	NOM. EFF. 92.4		MIN. EFF. 91.0	
BEARINGS	6309ZZ / 6307ZZ			RATING Cont.	

SER. NO.	TBD	DESIGN	B	WT. 312 LBS

PWM VFD DUTY	VT	CT	CP	S.F.
	3-60Hz	6-60Hz	60-120Hz	1.0 Only

Connection Diagram

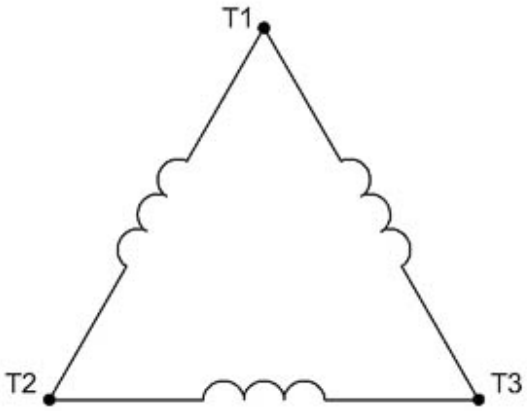

3 LEAD SINGLE VOLTAGE DELTA					
VOLTAGE	CONN.	L1	L2	L3	
-	DELTA	1	2	3	

WD_3D

TECO Westinghouse MOTORS (CANADA) INC.	
	Date: January 17, 2019

Thermal Limit Curves

Motor Type: AEHH8N		Catalogue No: PDH01545C		Family: Optim TEFC	
HP	15	Safe Stall Time		Full Load A	0.0 / 13.8 A
Voltage	0 / 575V 60Hz	Hot	22 s	Locked Rotor A	673 %
RPM	1800	Cold	32 s	Locked Rotor A	0.0 / 93 A

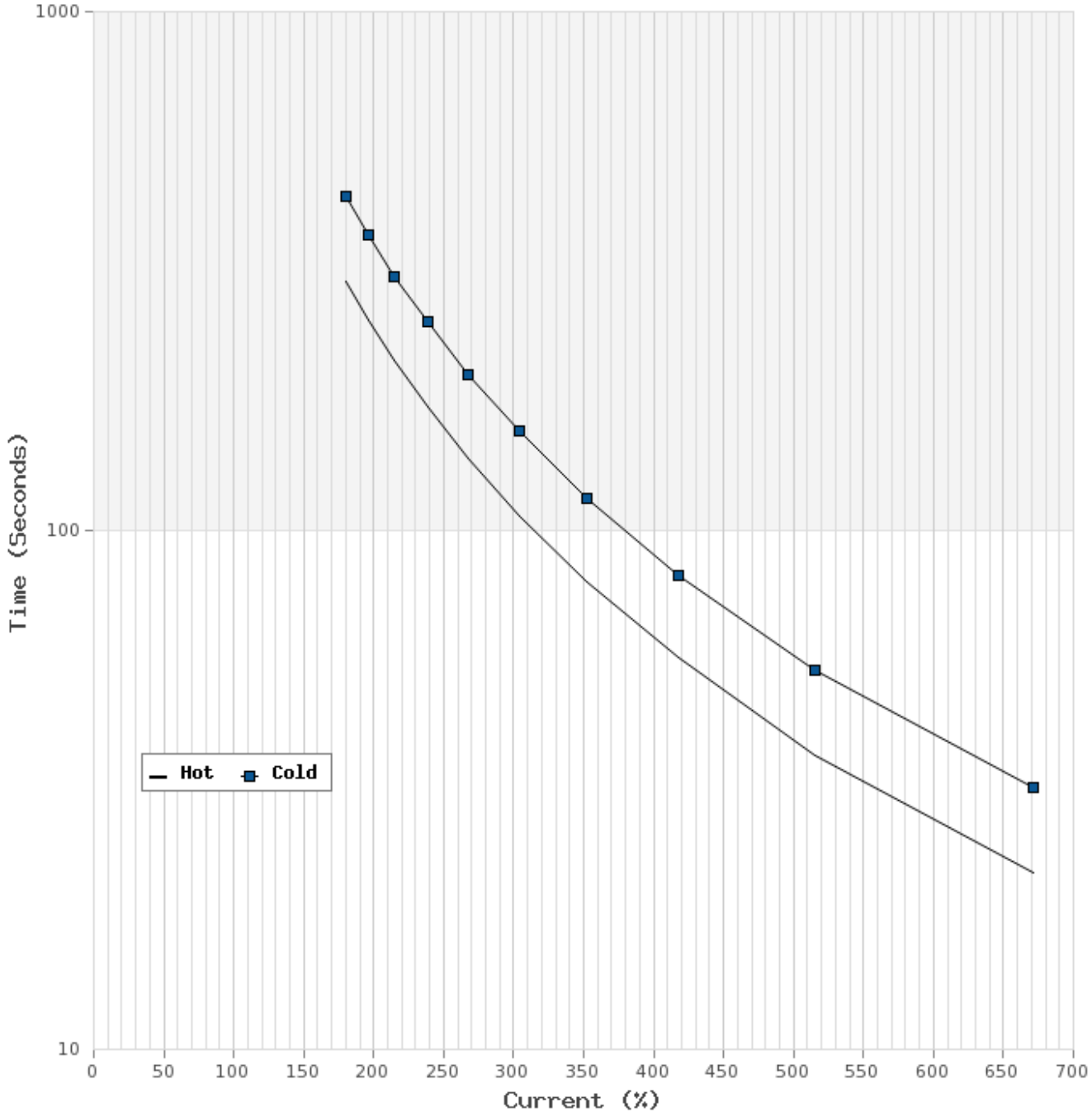

TECO Westinghouse MOTORS (CANADA) INC.	
	Date: January 17, 2019

T-N and I-N Curves

Motor Type: AEHH8N		Catalogue No: PDH01545C		Family: Optim TEFC	
HP	15	Full Load T	44.62 lb-ft	Full Load A	13.8 A
Voltage	575V 60Hz	Locked Rotor T	245 %	Locked Rotor A	93.0 A
RPM	1800	Pull Up T	180 %	Break Down T	270 %

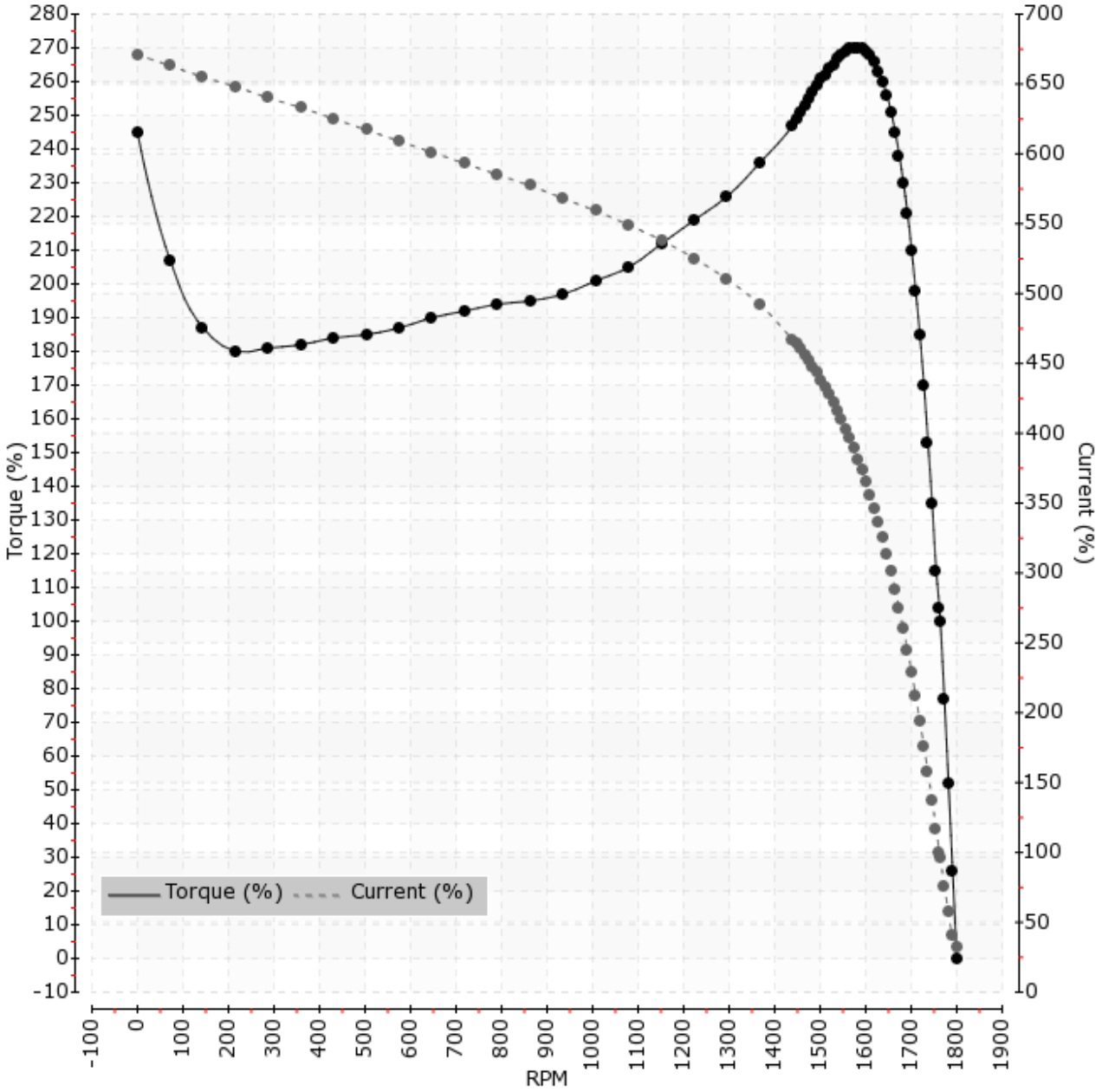

STANDARD WARRANTY FOR STOCK MOTORS

All TECO–Westinghouse brand stock motors sold by TECO–Westinghouse Motors (Canada) Inc. are warranted to be free of defects in material and workmanship for a period of 36 months from the date of sale (Advantage Plus 5 Year Warranty - IEEE 841 only).

This warranty is conditioned upon the installation, operation, and maintenance of the motors in accordance with TECO–Westinghouse Motors (Canada) Inc. recommendations or standard industry practice and the motors have at all times been operating or used under normal operating conditions for which they were designed.

TECO–Westinghouse Motors (Canada) Inc. shall, at its sole option and expense, either repair or replace, F.O.B. TWMI warehouse, any such motor or part which is defective within the warranty period.

In the event of a warranty claim, TECO–Westinghouse Motors (Canada) Inc. must be notified promptly following any motor failure. The motor shall be sent to a TECO–Westinghouse Motors (Canada) Inc. authorized service center for diagnosis on the cause of failure. If the failure is due to defective material and/or workmanship, TECO–Westinghouse Motors (Canada) Inc. will replace or repair the defective motor or part.

The repair or replacement of defective material and workmanship shall constitute complete fulfillment of TECO–Westinghouse Motors (Canada) Inc. warranty liability whether the warranty claims are based on contract, tort (including negligence and strict liability), or otherwise.

THERE ARE NO OTHER WARRANTIES, EXPRESS OR IMPLIED, INCLUDING ANY IMPLIED WARRANTY OF MERCHANTABILITY AND FITNESS FOR PARTICULAR PURPOSE, AND ALL WARRANTIES ARISING FROM COURSE OF DEALING AND USAGE OF TRADE. UNDER NO CIRCUMSTANCES, SHALL TECO-WESTINGHOUSE MOTORS (CANADA) INC. BE LIABLE FOR ANY SPECIAL, INDIRECT, INCIDENTAL, OR CONSEQUENTIAL DAMAGES, INCLUDING FREIGHT.

ONLINE WARRANTY INSTRUCTIONS ARE AVAILABLE AT:

www.tecowestinghouse.ca/support/warranty

TECO Westinghouse

MOTORS (CANADA) INC.

INSTALLATION AND MAINTENANCE INSTRUCTIONS FOR THREE PHASE INDUCTION MOTORS

Frames 143T - 449T

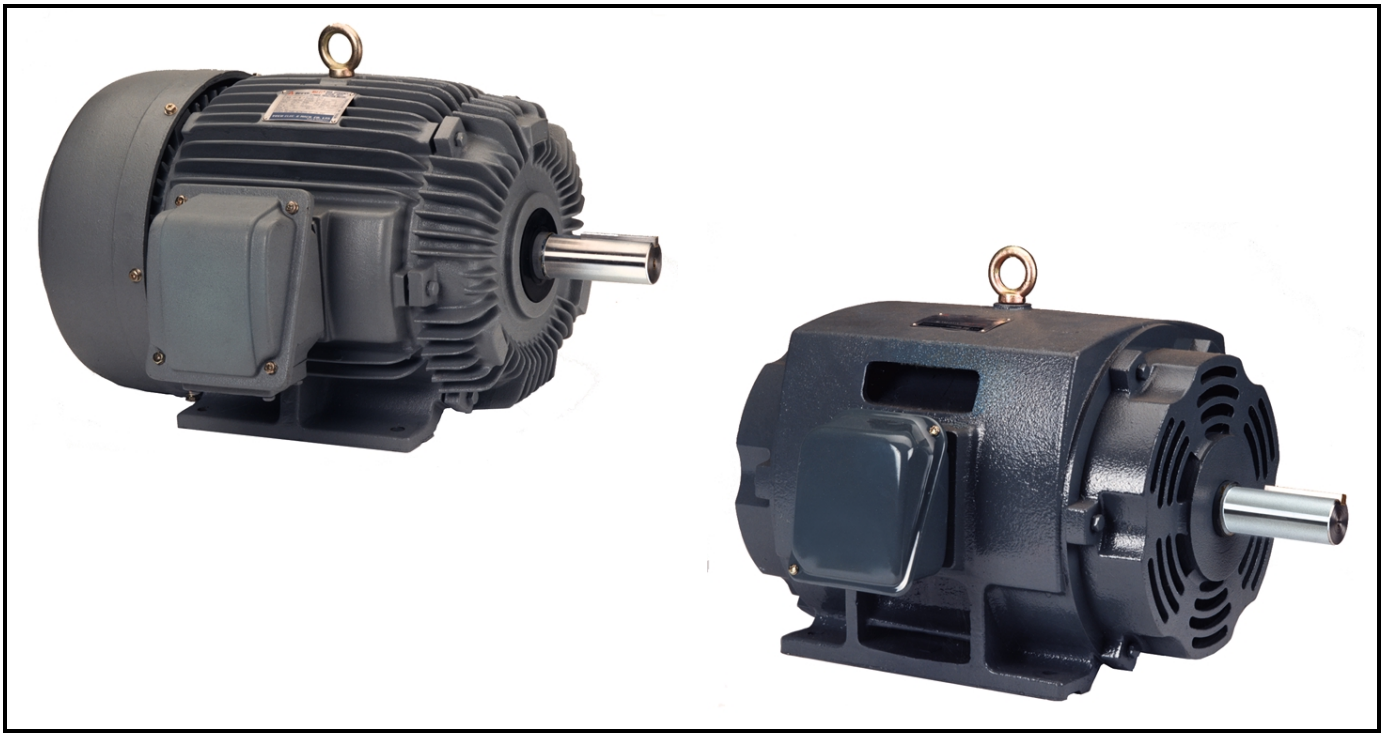

18060 -109 Ave Edmonton, AB T5S 2K2
Phone: 800-661-4023 780-444-8933 Fax: 888-873-8964

RECEIVING

1. Check nameplate data.
2. Check whether any damage has occurred during transportation.
3. After removal of shaft clamp, turn shaft by hand to check that it turns freely.
4. If motor is to be reshipped (alone or installed to another piece of equipment) the shaft must again be clamped to prevent axial movement.
   Note: Remove the bearing clamp before turning the shaft on 284T-449T frame motors.

WARNING
THE FOLLOWING SAFETY PRECAUTIONS MUST BE OBSERVED:

1. Electric rotating machinery and high voltage can cause serious or fatal injury if improperly installed, operated or maintained. Responsible personnel should be familiarized with NEMA MG2; Safety Standards for Construction and Guide Selection. Installation and Use of Electric Motors and Generators; National Electric Code and all local safety requirements.
2. When servicing, all power sources to the motor and to the accessory devices should be de-energized and disconnected and all rotating parts should be at standstill.
3. Lifting means, when supplied, are intended for lifting the motor only. When two lifting devices are supplied with the motor a dual chain must be used.
4. Suitable protection must be used when working near machinery with high noise levels.
5. Safeguard or protective devices must not be by-passed or rendered inoperative.
6. The frame of this machine must be grounded in accordance with the National Electric Code and applicable local codes.
7. A suitable enclosure should be provided to prevent access to the motor by other than authorized personnel. Extra caution should be observed around motors that are automatically or have automatic re-setting relays as they may restart unexpectedly.
8. Shaft key must be fully captive or removed before motor is started.
9. Provide proper safeguards for personnel against possible failure of motor-mounted brake, particularly on applications involving overhauling loads.
10. Explosion proof motors are constructed to comply with the label service procedure manual, repair of these motors must be made by TECO-Westinghouse or CSA/UL Listed service center in order to maintain CSA/UL Listing.

LOCATION

1. Drip-proof motors are intended for use where atmosphere is relatively clean, dry, well ventilated and non-corrosive.
2. Totally enclosed motors may be installed where dirt, moisture, or dust are present and in outdoor locations.
3. Explosion-proof motors are built for use in hazardous locations as indicated by Underwriters label on the motor.
4. Chemical duty enclosed motors are designed for installation in high corrosion or excessive moisture locations.
   Note: in all cases, no surrounding structure should obstruct normal flow or ventilating air through or over the motor.

MOUNTING

1. Mount motor securely on a firm, flat base. All ball bearing normal thrust motors up to and including 256T frame size may be side-wall or ceiling mounted; all others check nearest TECO-Westinghouse office for mounting recommendations.
2. Align motor accurately, using a flexible coupling if possible. For drive recommendations, consult with drive or equipment manufacturer, or TECO-Westinghouse.
3. Mounting bolts must be carefully tightened to prevent changes in alignment and possible damage to the equipment. The recommended tightening torque s for medium carbon steel bolts, identified by three radial lines at 120 degrees on the head, are:

Bolt Size	Recommended Torque (Ft-lb.)	
	Minimum	Maximum
2/8	25	37
1/2	60	90
5/8	120	180
3/4	210	320

4. V-belts Sheave Pitch Diameters should not be less than those shown in Table 1 (NEMA recommended values)
5. Tighten belts only enough to prevent slippage. Belt speed should not exceed 5000 ft. per min.

TABLE 1. V-Belt Sheave Pitch Diameters (MG1-14.42)

Frame Number	Horsepower at Synchronous Speed, RPM				V-Belt Sheave			
					Conventional A, B, C, D AND E		Narrow 3V, 5V, AND 8V	
	3600	1800	1200	900	Minimum Pitch Diameter Inches	*Maximum Width Inches	Minimum Outside Diameter Inches	**Maximum Width Inches
143T	1.5	1	.75	.5	2.2	4.25	2.2	2.25
145T	2-3	1.5-2	1	.75	2.4	4.25	2.4	2.25
182T	3	3	1.5	1	2.4	5.25	2.4	2.75
182T	5				2.6	5.25	2.4	2.75
184T			2	1.5	2.4	5.25	2.4	2.75
184T	5				2.6	5.25	2.4	2.75
184T	7.5	5			3.0	5.25	3.0	2.75
213T	7.5-10	7.5	3	2	3.0	6.5	3.0	3.375
215T	10		5	3	3.0	6.5	3.0	3.375
215T	15	10			3.8	6.5	3.8	3.375
254T	15		7.5	5	3.8	7.75	3.8	4
254T	20	15			4.4	7.75	4.4	4
256T	20-25		10	7.5	4.4	7.75	4.4	4
256T		20			4.6	7.75	4.4	4
284T			15	10	4.6	9	4.4	4.625
284T		25			5.0	9	4.4	4.625
286T		30	20	15	5.4	9	5.2	4.625

TABLE 1. V-Belt Sheave Pitch Diameters (MG1-14.42)

Frame Number	Horsepower at Synchronous Speed, RPM				V-Belt Sheave			
					Conventional A, B, C, D AND E		Narrow 3V, 5V, AND 8V	
	3600	1800	1200	900	Minimum Pitch Diameter Inches	*Maximum Width Inches	Minimum Outside Diameter Inches	**Maximum Width Inches
324T		40	25	20	6.0	10.25	6.0	5.25
326T		50	30	25	6.8	10.25	6.8	5.25
364T			40	30	6.8	11.5	6.8	5
364T		60			7.4	11.5	7.4	5.785
365T			50	40	8.2	11.5	8.2	5.785
365T		75			9.0	11.5	8.6	5.785
404T			60		9.0	14.25	8.0	7.25
404T				50	9.0	14.25	8.4	7.25
404T		100			10.0	14.25	8.6	7.25
405T			75	60	10.0	14.25	10.0	7.25
405T		100			10.0	14.25	8.6	7.25
405T		125			11.5	14.25	10.5	7.25
444T			100		11.0	16.75	10.0	8.5
444T				75	10.5	16.75	9.5	8.5
444T		125			11.0	16.75	9.5	8.5
444T		150				16.75	10.5	8.5
445T			125		12.5	16.75	12.0	8.5
445T				100	12.5	16.75	12.0	8.5
445T		150				16.75	10.5	8.5

*Max. Sheave width = 2(N-W) - .25

**Max Sheave width = N-W

***Sheave ratios grater than 5:1 and center-to-center distance less than the diameter of the large sheave should be referred to TECO-Westinghouse.

POWER SUPPLY & CONNECTIONS

1. Wiring of motor and control, overload protection and grounding should be in accordance with National Electrical Code and all local safety requirements.
2. Nameplate voltage and frequency should agree with power supply. Motor will operate satisfactorily on line voltage within –10% of nameplate voltage; or frequency with –5% and with a combined variation not to exceed –10%. 230-volt motors can be used on 208-volt network systems, but with slightly modified performance characteristics as shown on the nameplate.
3. Dual voltage and single voltage motors can be connected for the desired voltage by following connection diagram shown on the nameplate or inside of the conduit box.
4. All Explosion Proof motors have Temperature Limiting Devices in the motor enclosure to prevent excessive external surface temperature of the motor in accordance with CSA/UL standards. Terminals of thermal protectors (P1 & P2) should be connected to the motor control equipment, according to the connection diagram inside of the conduit box.
5. Standard connection diagram for three phase, not thermally protected, dual rotation motors are shown in diagrams A through E.
   (Note: To change rotation, interchange any two line leads)

A. 3 Lead, Single Voltage

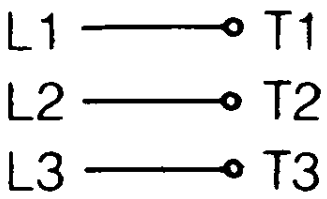

B. 6 Lead, Dual Voltage & Voltage Ration 1 to 3

B-1 Across the Line Start & Run

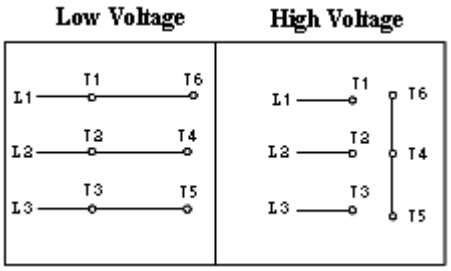

B-2 Wye Start & Delta Run
(Low Voltage only)

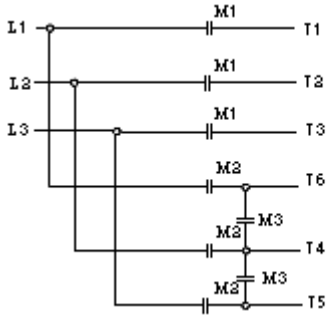

	START	RUN
M1	CLOSE	CLOSE
M2	OPEN	CLOSE
M3	CLOSE	OPEN

C. 9 Leads; Dual Voltage & Voltage Ratio 1 to 2, Wye Connected

C-1 Across the Line Start & Run

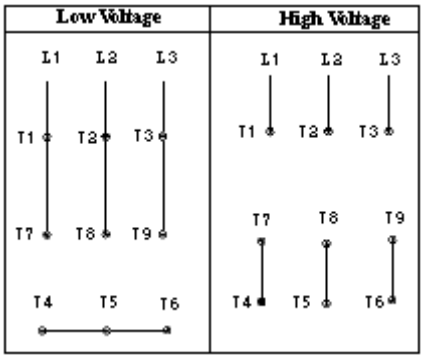

C-2 Part Winding Start
(Low Voltage only)

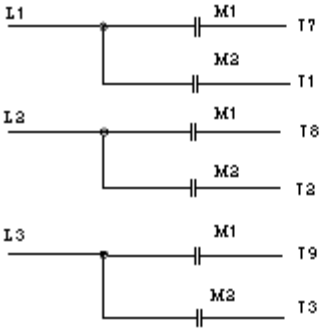

	START	RUN
M1	CLOSE	CLOSE
M2	OPEN	CLOSE
Tie Together	(T4-T5-T6)	

D. 9 Leads; Dual Voltage & Voltage Ration 1 to 2, Delta Connected

D-1 Across the Line Start & Run

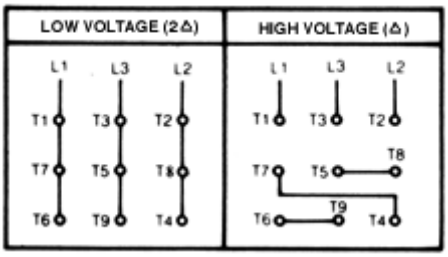

D-2 Part Winding Start
(Low Voltage only)

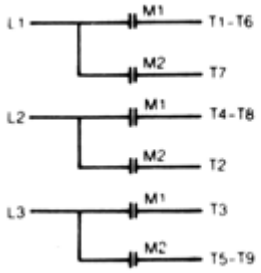

	START	RUN
M1	CLOSE	CLOSE
M2	OPEN	CLOSE

E. 12 Leads, Dual Voltage

E-1 Across the Line Start & Run

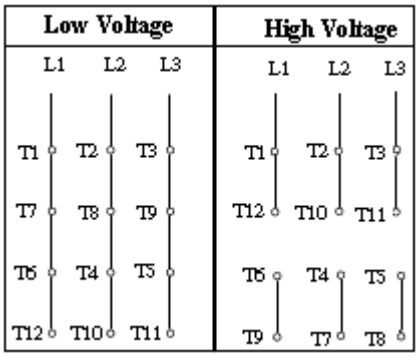

E-2-1 Wye Start & Delta Run (Low Voltage only)

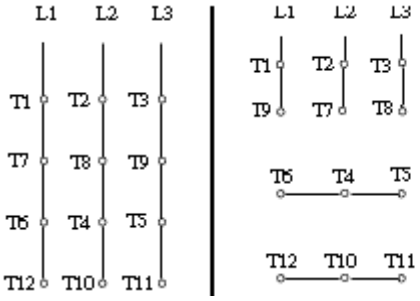

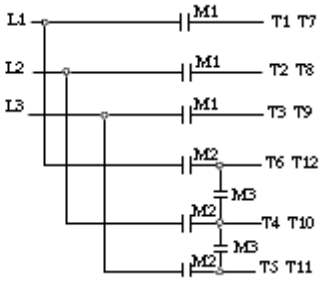

	START	RUN
M1	CLOSE	CLOSE
M2	OPEN	CLOSE
M3	CLOSE	OPEN

E-2-2 Wye Start & Delta Run (High Voltage only)

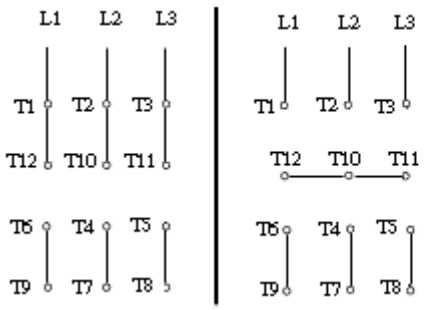

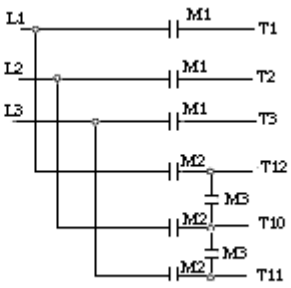

	START	RUN
M1	CLOSE	CLOSE
M2	OPEN	CLOSE
M3	CLOSE	OPEN

Tie Together (T4-T7); (T5-T8); (T6-T9)

E-3 Part Winding Start (Low Voltage only)

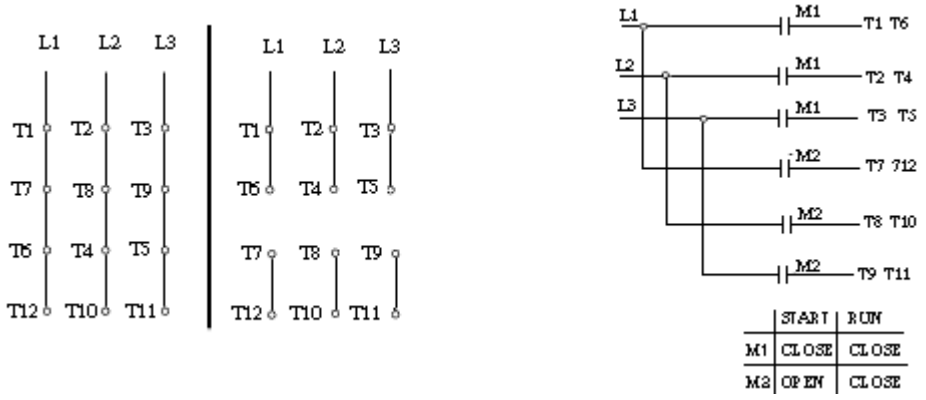

*Important: For Part Winding Start, M2 contactor should be closed within two (2) seconds after M1 contactor is closed.
Only 4 pole and above (e.g., 6P, 8P) motors are satisfactory for Part Winding Start at low voltage.

START UP

1. Disconnect load and start motor. Check direction of rotation. If rotation must be changed, ALLOW THE MOTOR TO STOP COMPLETLEY. Interchange any two leads of a three-phase motor.
2. Connect load. The motor should start quickly and run smoothly. If no, shut power off at once. Recheck the assembly including all connections before restarting.
3. If excessive vibration is noted, check for loose mounting bolts too flexible motor support structure or transmitted vibration from adjacent machinery. Periodic vibration checks should be made; foundations often settle.
4. Operate under load for short period of time and check operating current against nameplate.

TESTING

If the motor has been in storage for an extensive period or has been subjected to adverse moisture conditions, it is best to check the insulation resistance of the stator winding with a megometer. Depending on the length and conditions of storage it may be necessary to regrease or change rusted bearings.
If the resistance is lower than one megohm the windings should be dried in one of the following two ways:

1. Bake in oven at temperatures not exceeding 90ºC (194ºF) until insulation resistance becomes constant.
2. With rotor locked, apply low voltage and gradually increase the current through windings until temperature measured with a thermometer reaches 90ºC (194ºF). Do not exceed this temperature.

MAINTENANCE

INSPECTION

Inspect motor at regular intervals. Keep motor clean and ventilation openings clear.

LUBRICATION

1. Frame 143T-256T: Double shielded and pre-lubricated ball-bearing motors without grease fittings and don't need relubrication, except on Advantage Plus products which have regreasable features.
2. Frames 280TS, 320-449T(TS): Motors having grease fittings and grease discharge devices at brackets. Motors are shipped with grease for initial running. It is necessary to relubricate anti-friction bearing motors periodically, depending on size and type of service. See Table 2 to provide maximum bearing life. Excessive or too frequent lubrication may damage the motor.

TABLE 2

Horsepower	Standard Conditions	Severe Conditions	Extreme Conditions
1 Thru 30 Hp, 1800 rpm and below	7 years	3 years	180 days
40 Thru 75 Hp, 1800 rpm and below	210 days	70 days	30 days
100 Thru 150 Hp, 1800 rpm and below	90 days	30 days	15 days
1 Thru 20 Hp, 3600 rpm	5 years	2 years	90 days
25 Thru 75 Hp, 3600 rpm	180 days	60 days	30 days
100 Thru 150 Hp, 3600 rpm	90 days	30 days	15 days

Note:

A. Standard conditions: 8 hours operation per day, normal or light loading, clear and 40ºC ambient conditions.
B. Severe conditions: 24-hour operation per day or light shock loading, vibration or in dirty or dusty conditions.
C. Extreme conditions: With heavy shock loading or vibration or dusty conditions.
D. For double shielded bearings, above data (lubrication frequency) means that the bearing must be replaced.

3. Be sure fittings are clean and free from dirt. Using a low-pressure grease gun, pump in the recommended grease until new grease appears at grease discharge hole.
4. Use ExxonMobil Polyrex EM grease or equivalent polyurea based grease unless special grease is specified on the nameplate.
5. If relubrication is to be performed with the motor running, stay clear of rotating parts. After regreasing, allow the motor to run for ten to thirty minutes.

RENEWAL PARTS

1. Use only genuine TECO-Westinghouse renewal parts or as recommended by TECO-Westinghouse.
2. When you order renewal parts please specify complete information to TECO-Westinghouse office/agent such as type, frame no., poles, horsepower, voltage, series no., quantity, etc.

FOR FURTHER INFORMATION PLEASE CONTACT

TECO-WESTINGHOUSE MOTORS (CANADA) INC.

Section 4

Other Documents

Other Documents

#	Description
01	Spare parts
02	Spare parts Polymer systems
03	Special maintenance tools

Description :
Spare parts

CVP PRESS 3-900/3000 CVP

LIST OF RECOMMENDED SPARE PARTS

Rotary Press spare parts :

Part No	Art.	Qty	Description
IFI-01376	25B	3	Right scraper blade
IFI-01377	25C	3	Left scraper blade
IFI-02430	21	3	Deflector
IFI-02280-V21	18	6	Seals (3x right & 3x left)

Floculator spare parts :

Part No	Art.	Qty	Description
IFI-00690	18	2	Shaft seal type LUP, Manville#8989 LUP
IFI-00691	19	1	Shaft seal type LDS, Manville#15025 LDS

March 2022

Description :
Spare parts Polymer systems

LIQUID POLYMER SYSTEM MODEL :

POLYSYS-1/2-120V

LIST OF SPARE PARTS SUPPLIED WITH CONTRACT

Liquid Polymer System Spare parts :

Part No	Art.	Qty	Description	
0M3.2200.PFP	318	1	QDos30 ReNu SANTOPRENE PUMP HEAD	***

***Pump head replacement will occur every 6 to 18 months depending on use. The pump is equiped with a head leak detector to stop the pump & tell when its time to replace the head. Refer to pump operating & maintenance manual for futher details & explanations.

March 2022

Description :
Special maintenance tools

CVP ROTARY PRESS

List of special maintenance tools

Part No.	Description	Qty	Notes
IFI-01856	Lifting device (50 mm channel) c/w (2) Hexagonal bolts M20 x 2,5 x 130 mm	1	
IFI-01975	Cover supports for changing seals c/w (2) Hex. bolts M10 x 1,5 – 45 mm inox. 316	1	
IFI-01999	Shaft extension device (Seal change end shaft) Stainless tubing	1	
SPA-026-003	Eye bolt M12 x 1,75 x 20.5 mm (Lifting wheel device)	2	
SPA-026-002	Eye bolt M10 x 1,5 x 17 mm (Lifting housing device)	3	
IFI-02063	Micrometer torque wrench	1	
IFI-02064	Cover torque bit (Long. hex. socket 3/8 Dr 8 mm)	1	

March 2022