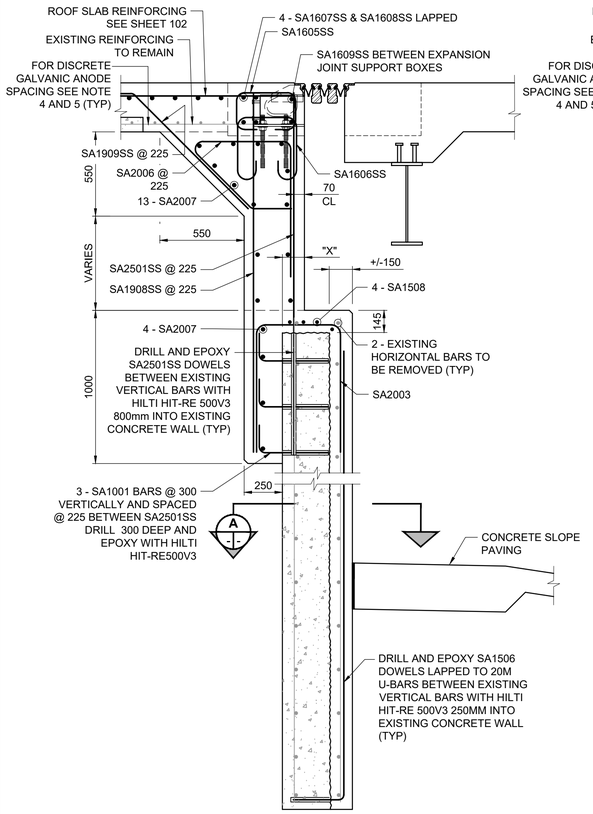

A 102/104 **SOUTH ABUTMENT - MODIFICATION**
SCALE: 1:20

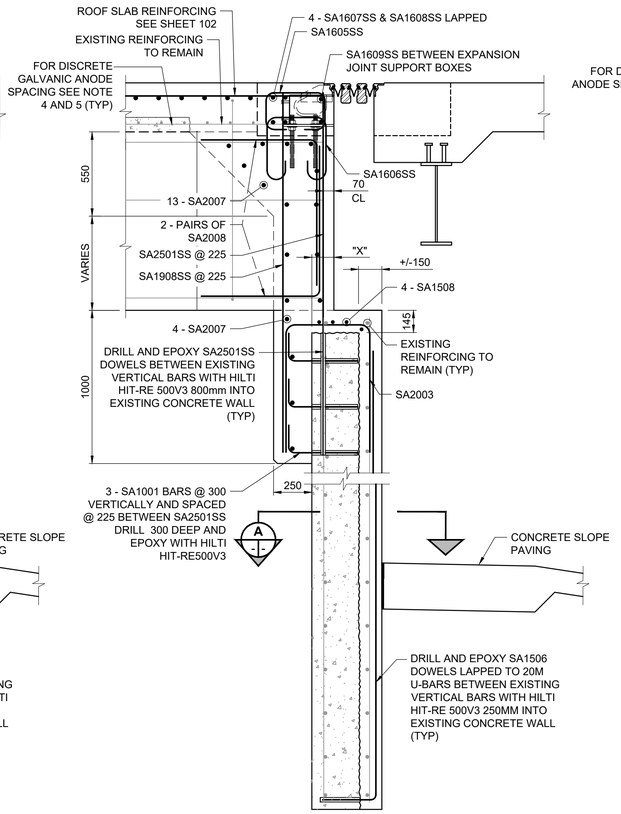

B 102/104 **SOUTH ABUTMENT - MODIFICATION**
SCALE: 1:20

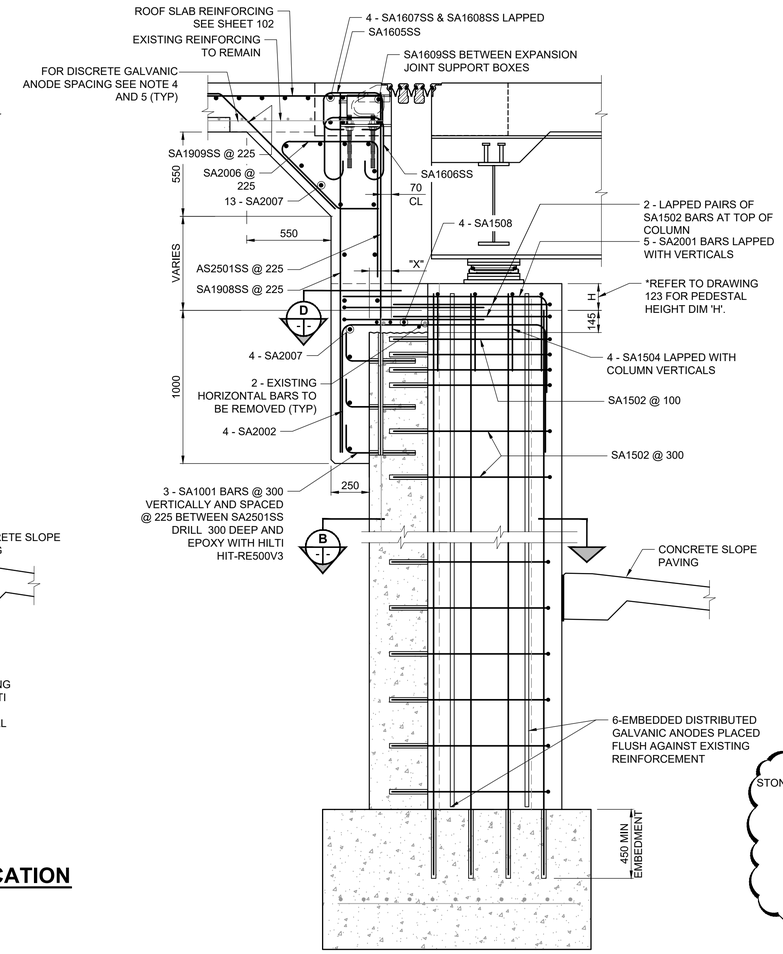

C 102/104 **SOUTH ABUTMENT - MODIFICATION**
SCALE: 1:20

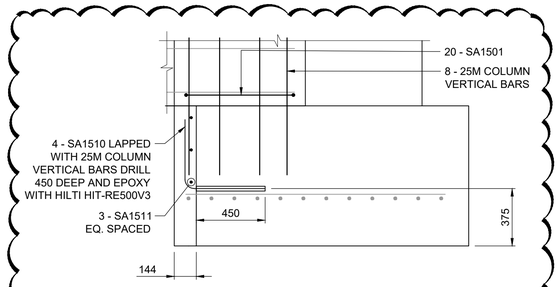

1 102/104 **SECTION MODIFICATION** 1
SCALE: 1:20

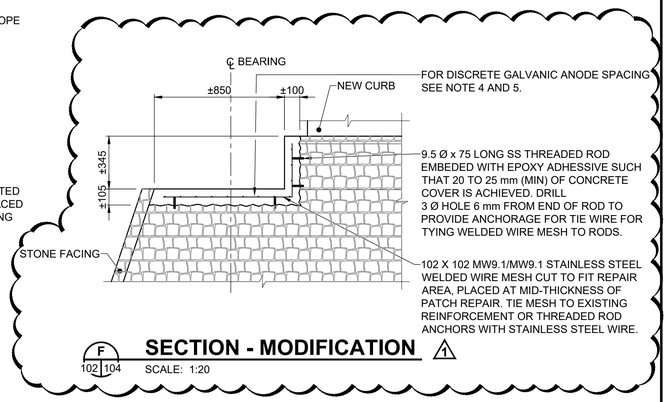

F 102/104 **SECTION - MODIFICATION** 1
SCALE: 1:20

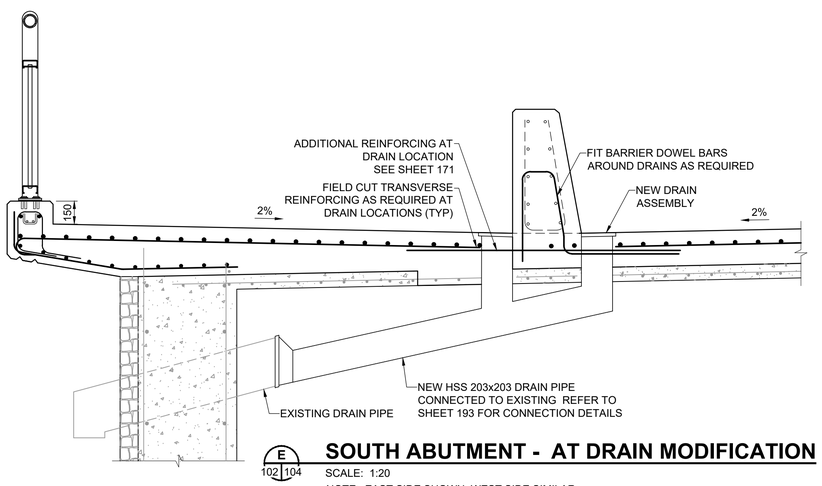

E 102/104 **SOUTH ABUTMENT - AT DRAIN MODIFICATION**
SCALE: 1:20
NOTE: EAST SIDE SHOWN, WEST SIDE SIMILAR

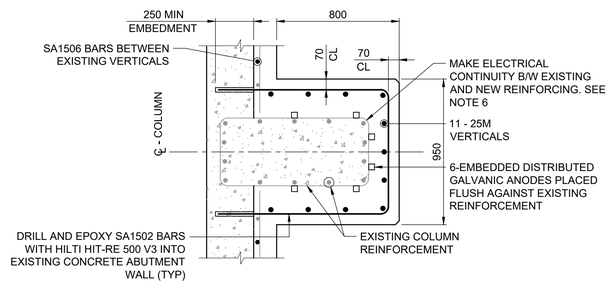

B -/- **SECTION MODIFICATION**
SCALE: 1:20

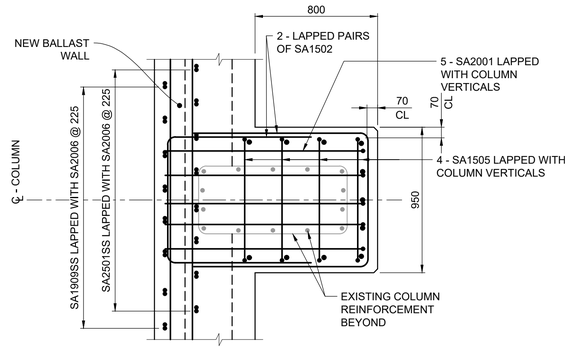

D -/- **SECTION MODIFICATION**
SCALE: 1:20

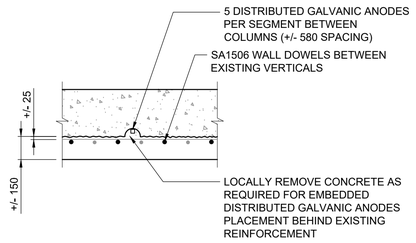

A -/- **SECTION MODIFICATION**
SCALE: 1:20

GENERAL NOTES: 1

1. PILES NOT SHOWN FOR CLARITY.
2. DESIGN CONSIDERS MIN 145MM AT DIM 'X'. FINAL DIMENSION MAY VARY DEPENDANT ON FIELD CONDITIONS. IT IS ANTICIPATED THERE IS STRESS LOCKED INTO STEEL GIRDERS. THE CONTRACTOR TO BE PREPARED FOR THE GIRDERS TO MOVE HORIZONTALLY TOWARDS THE FIXED POINT AFTER JACKING. FINAL DIMENSION 'X' TO BE CONFIRMED WITH CONTRACT ADMINISTRATOR AFTER JACKING OPERATION IS COMPLETE.
3. EXISTING BALLAST WALL VERTICAL REINFORCEMENT TO BE REMOVED ONLY AT DIRECTION OF CONTRACT ADMINISTRATOR AND DEPENDS ON DIMENSION 'X' TO BE FIELD CONFIRMED. INCASE OF REMOVAL LAP SA2501SS WITH SA2006 AND EXTEND INTO BLOCKOUT.
4. INSTALL DISCRETE GALVANIC ANODES TIED TO EXPOSED EXISTING REINFORCING STEEL BARS TO BE CAST INTO NEW CONCRETE. ANODES SHALL BE SPACED AT 550 mm MAX. CONTRACTOR TO CONFIRM ELECTRICAL CONTINUITY OF BARS.
5. SANDBLAST EXISTING REINFORCING STEEL PRIOR TO INSTALLATION OF ANODES, PLACEMENT OF NEW REINFORCEMENT AND PLACEMENT OF NEW CONCRETE.
6. LAYOUT DISTRIBUTED GALVANIC ANODES AS PER MANUFACTURER RECOMMENDATIONS. CONTRACTOR TO CONFIRM ELECTRICAL CONTINUITY BETWEEN ANODES, EXISTING REINFORCEMENT AND NEW COLUMN REINFORCEMENT. REFER TO SHEET 139 FOR DISTRIBUTED GALVANIC ANODE INSTALLATION DETAILS.

1 REINFORCING BAR MARKS ADDED AS PART OF ADDENDUM 1

ENGINEERS GEOSCIENTISTS MANITOBA
Certificate of Authorization
MORRISON HERSHFIELD
No. 1736

TENDER No. 615-2022

METRIC
WHOLE NUMBERS INDICATE MILLIMETRES
DECIMALIZED NUMBERS INDICATE METRES

LOCATION APPROVED
UNDERGROUND STRUCTURES

SUPR. U/G STRUCTURES COMMITTEE — DATE

NOTE:
LOCATION OF UNDERGROUND STRUCTURES AS SHOWN ARE BASED ON THE BEST INFORMATION AVAILABLE BUT NO GUARANTEE IS GIVEN THAT ALL EXISTING UTILITIES ARE SHOWN OR THAT THE GIVEN LOCATIONS ARE EXACT. CONFIRMATION OF EXISTENCE AND EXACT LOCATION OF ALL SERVICES MUST BE OBTAINED FROM THE INDIVIDUAL UTILITIES BEFORE PROCEEDING WITH CONSTRUCTION.

BM 54-006 — Tblt. in S. face of E. Conc. pier in 1st row of Conc. piers
ELEV 228.166 m — N. of S. end of St. Vital Bridge over Red River, N. of Kingston Row, 5 m W. of E. end of Pier.

No.	REVISIONS	YY/MM/DD	BY
1	REVISED FOR ADDENDUM 1	22/12/13	BAP
0	ISSUED FOR TENDER	22/11/24	BAP

MORRISON HERSHFIELD

DESIGNED BY	SF	CHECKED BY	AGG
DRAWN BY	MB	APPROVED BY	BE
HOR SCALE / VERT SCALE	1:50	RELEASED FOR CONSTRUCTION	
DATE	NOV 24, 2022	DATE	

PROFESSIONAL'S SEAL
PROVINCE OF MANITOBA — S. Faraz — Member 42621 — 2021-12-14 — REGISTERED PROFESSIONAL ENGINEER

CONSULTANT FILE NAME
2103510-SVB DD-BR-ABUT11.dwg

Winnipeg
THE CITY OF WINNIPEG
PUBLIC WORKS DEPARTMENT
ENGINEERING DIVISION

ST. VITAL TWIN BRIDGE OVER THE RED RIVER REHABILITATION AND RELATED WORKS

BRIDGE REHABILITATION
ABUTMENT MODIFICATIONS - SOUTH ABUTMENT 3 OF 4

CITY FILE NUMBER: B116-24-18
SHEET 104 OF 244
DRAWING NUMBER: 104

ISO A1 - 594mm x 841mm
X:\Prg\2021\21035100-St Vital Bridge over Red River PD\09_CAD\07 Sheets\Structural\Detailed Design\2103510-SVB DD-BR-ABUT11.dwg Last Saved: 12/12/2022 9:22 PM by AHeppner Plotted: 12/14/2022 2:47 PM by Alex Heppner