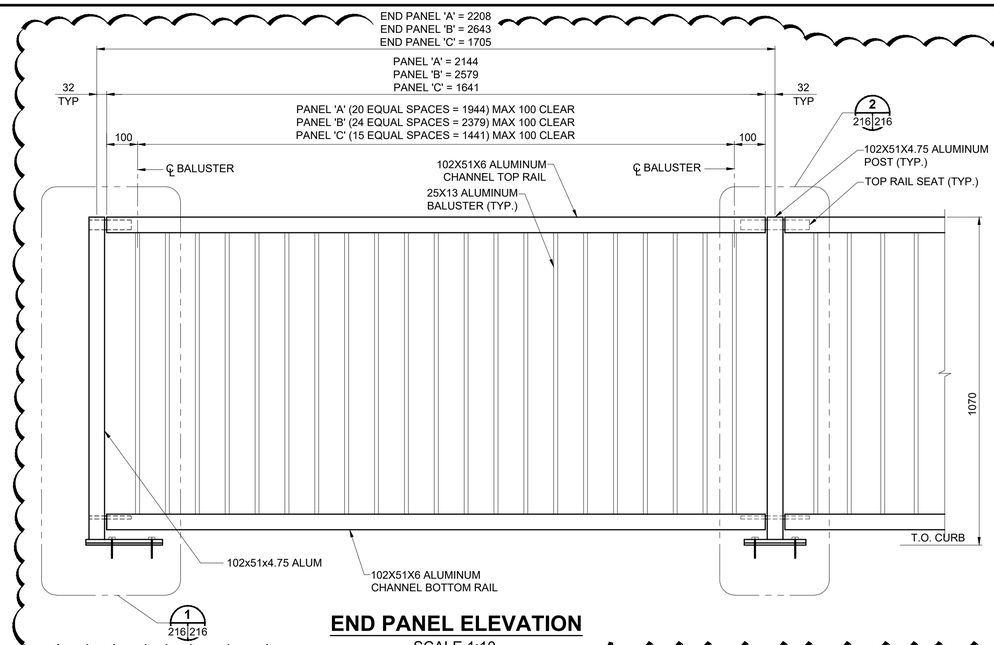

END PANEL ELEVATION
SCALE 1:10

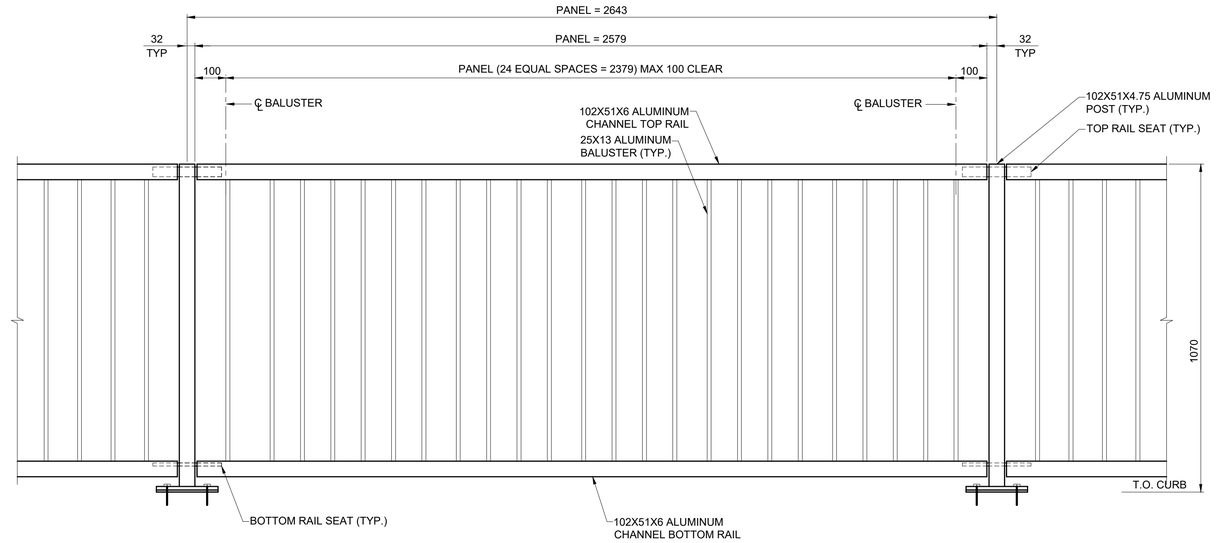

INTERMEDIATE PANEL ELEVATION
SCALE 1:10

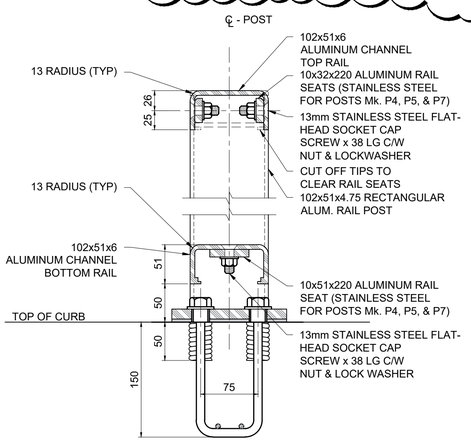

SECTION
A
HANDRAIL POST
SCALE: 1:4

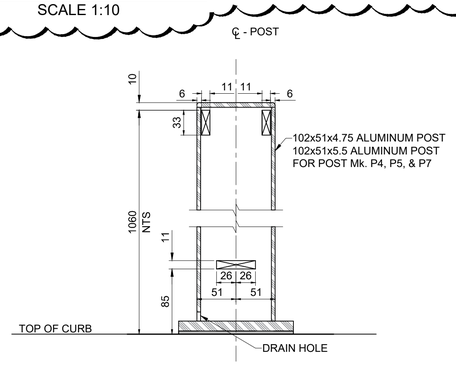

SECTION
B
HANDRAIL POST
SCALE: 1:4

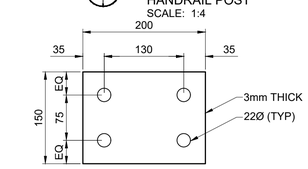

INTERMEDIATE NEOPRENE PAD
SCALE 1:5

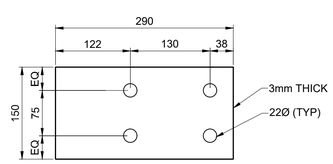

END NEOPRENE PAD
SCALE 1:5

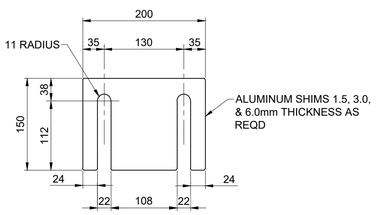

INTERMEDIATE SHIM
SCALE 1:5

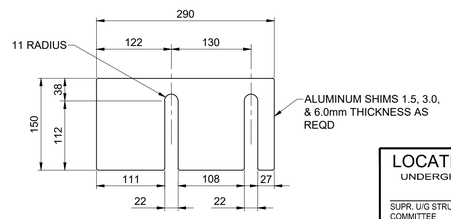

END SHIM
SCALE 1:5

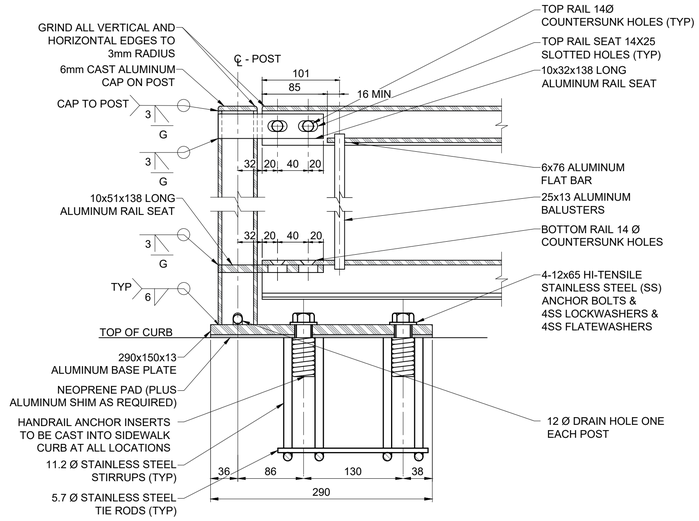

DETAIL
1 216 216
END POST - Mk.
SCALE: 1:4

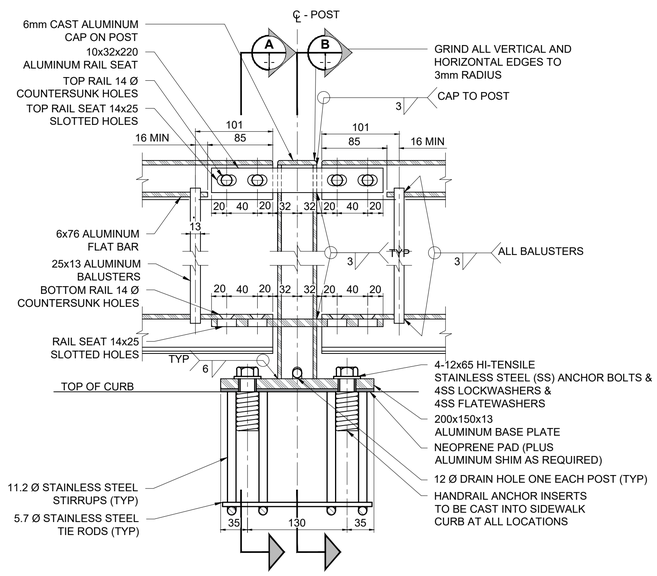

DETAIL
2 216 216
INTERMEDIATE POST - Mk.
SCALE: 1:4

ENGINEERS GEOSCIENTISTS MANITOBA
Certificate of Authorization
MORRISON HERSHFIELD
No. 1736

TENDER No. 615-2022

METRIC
WHOLE NUMBERS INDICATE MILLIMETRES
DECIMALIZED NUMBERS INDICATE METRES

LOCATION APPROVED
UNDERGROUND STRUCTURES

SUPR, U/G STRUCTURES COMMITTEE — DATE

NOTE:
LOCATION OF UNDERGROUND STRUCTURES AS SHOWN ARE BASED ON THE BEST INFORMATION AVAILABLE BUT NO GUARANTEE IS GIVEN THAT ALL EXISTING UTILITIES ARE SHOWN OR THAT THE GIVEN LOCATIONS ARE EXACT. CONFIRMATION OF EXISTENCE AND EXACT LOCATION OF ALL SERVICES MUST BE OBTAINED FROM THE INDIVIDUAL UTILITIES BEFORE PROCEEDING WITH CONSTRUCTION.

BM 54-006
ELEV 228.166 m
Tblt. in S. face of E. Conc. pier in 1st row of Conc. piers N. of S. end of St. Vital Bridge over Red River, N. of Kingston Row, 5 m W. of E. end of Pier.

No.	REVISIONS	YY/MM/DD	BY
1	REVISED FOR ADDENDUM 1	22/12/13	BAP
0	ISSUED FOR TENDER	22/11/24	BAP

MORRISON HERSHFIELD

DESIGNED BY	AG	CHECKED BY	BAP
DRAWN BY	KMB	APPROVED BY	BE
HOR SCALE / VERT SCALE	AS NOTED	RELEASED FOR CONSTRUCTION	
DATE	NOV 24, 2022	DATE	

PROFESSIONAL'S SEAL
PROVINCE OF MANITOBA
A.D.G. GILARSKI
Member
32144
2022-12-13
REGISTERED PROFESSIONAL ENGINEER

CONSULTANT FILE NAME
2103510-SVB
DD-NPU-RAIL02.dwg

Winnipeg

THE CITY OF WINNIPEG
PUBLIC WORKS DEPARTMENT
ENGINEERING DIVISION

ST. VITAL TWIN BRIDGE OVER THE RED RIVER REHABILITATION AND RELATED WORKS

CHURCHILL DR PEDESTRIAN UNDERPASS (UNDER OSBORNE ST)

RAILING DETAILS

CITY FILE NUMBER: U216-24-8
SHEET 216 OF 244
DRAWING NUMBER: 216

ISO A1 - 594mm x 841mm
X:\Proj\2021\2103510\00-St Vital Bridge over Red River PD\90_CAD\07 Sheets\Structural\Detailed Design\2103510-SVB DD-NPU-RAIL02.dwg Last Saved: 12/13/2022 10:07 AM by KBerard Plotted: 12/13/2022 10:42 AM by Kevin Berard