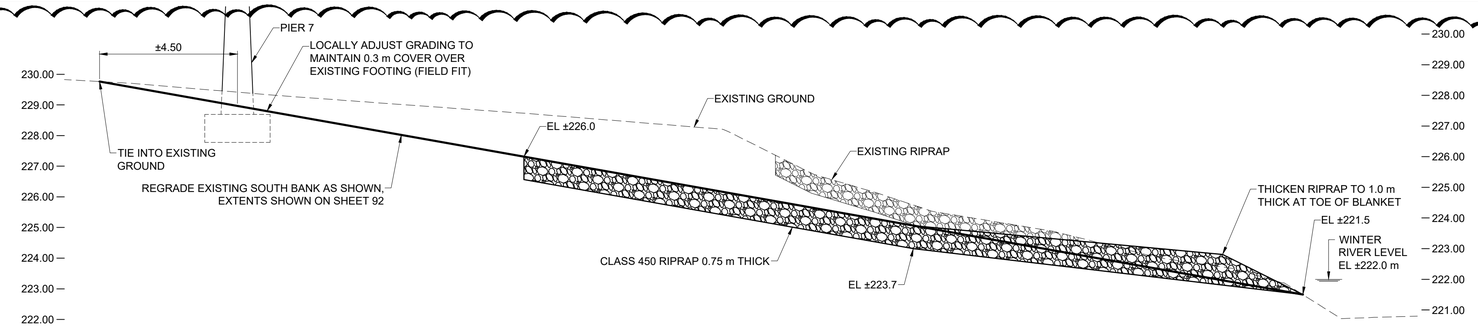

A 92|93 **SECTION**
SCALE: 1:100

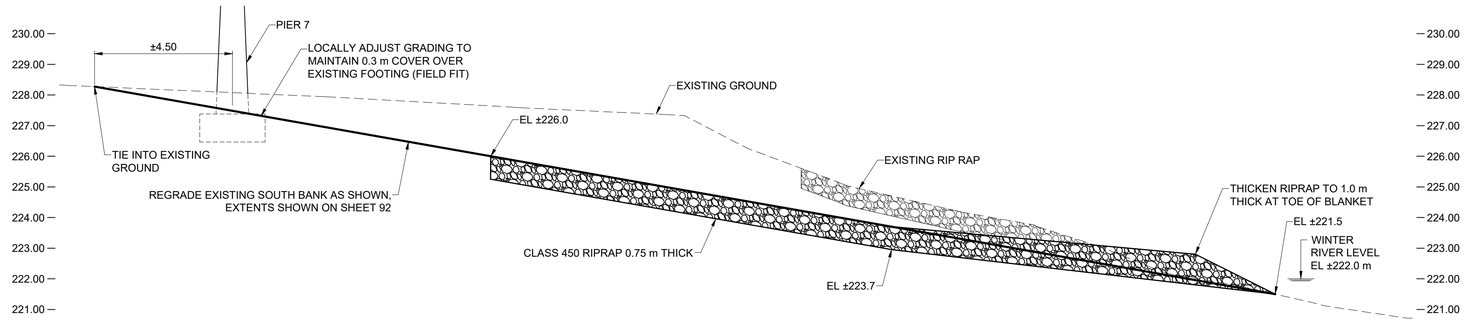

B 92|93 **SECTION**
SCALE: 1:100

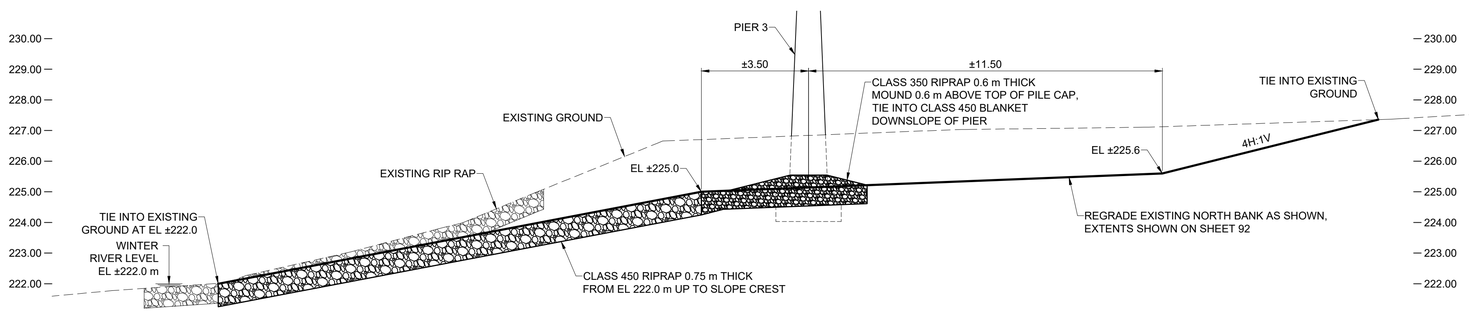

C 92|93 **SECTION**
SCALE: 1:100

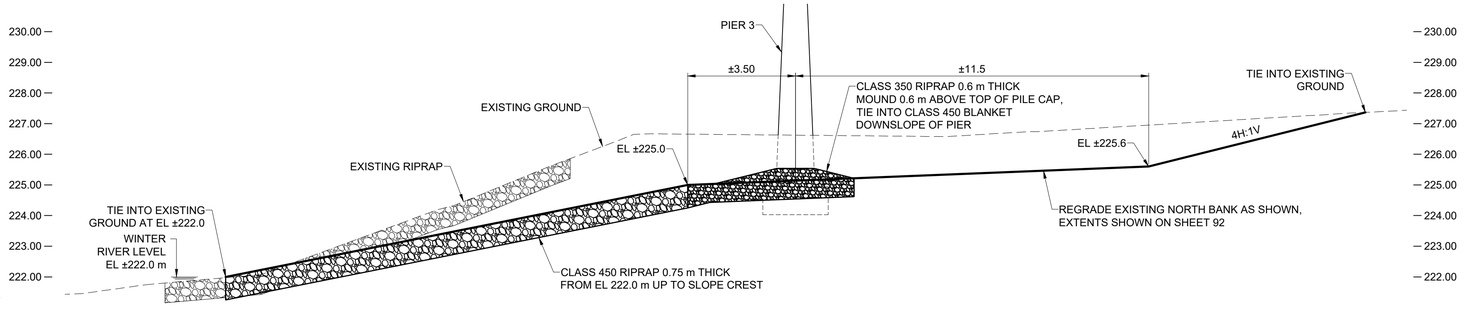

D 92|93 **SECTION**
SCALE: 1:100

1

ENGINEERS GEOSCIENTISTS MANITOBA
Certificate of Authorization
MORRISON HERSHFIELD
No. 1736

TENDER No. 615-2022

LOCATION APPROVED
UNDERGROUND STRUCTURES

SUPR. U/G STRUCTURES COMMITTEE — DATE

NOTE:
LOCATION OF UNDERGROUND STRUCTURES AS SHOWN ARE BASED ON THE BEST INFORMATION AVAILABLE BUT NO GUARANTEE IS GIVEN THAT ALL EXISTING UTILITIES ARE SHOWN OR THAT THE GIVEN LOCATIONS ARE EXACT. CONFIRMATION OF EXISTENCE AND EXACT LOCATION OF ALL SERVICES MUST BE OBTAINED FROM THE INDIVIDUAL UTILITIES BEFORE PROCEEDING WITH CONSTRUCTION.

BM 54-006 ELEV 228.166 m — Tbit. in S. face of E. Conc. pier in 1st row of Conc. piers N. of S. end of St. Vital Bridge over Red River, N. of Kingston Row, 5 m W. of E. end of Pier.

No.	REVISIONS	YY/MM/DD	BY
1	REVISED FOR ADDENDUM 1	22/12/13	BAP
0	ISSUED FOR TENDER	22/11/24	BAP

MORRISON HERSHFIELD

DESIGNED BY	MVH	CHECKED BY	BAP
DRAWN BY	KMB	APPROVED BY	BE
HOR SCALE	1:100	RELEASED FOR CONSTRUCTION	
VERT SCALE	1:100		
DATE	NOV 24, 2022	DATE	

PROFESSIONAL'S SEAL
PROVINCE OF MANITOBA — 2022/12/13 — M. J. VAN HEESEN — Member 24729 — REGISTERED PROFESSIONAL ENGINEER

CONSULTANT FILE NAME
2103510-SVB DD-BR-GRADING.dwg

Winnipeg

THE CITY OF WINNIPEG
PUBLIC WORKS DEPARTMENT
ENGINEERING DIVISION

ST. VITAL TWIN BRIDGE OVER THE RED RIVER REHABILITATION AND RELATED WORKS

BRIDGE REHABILITATION
NORTH AND SOUTH BANK GRADING

CITY FILE NUMBER: B116-24-7
SHEET 93 OF 244
DRAWING NUMBER: 93

METRIC
WHOLE NUMBERS INDICATE MILLIMETRES
DECIMALIZED NUMBERS INDICATE METRES

ISO A1 - 594mm x 841mm

X:\Proj\2021\210351000-St Vital Bridge over Red River PD\09. CAD\07 Sheets\Structural\Detailed Design\2103510-SVB DD-BR-GRADING.dwg Last Saved: 12/13/2022 10:52 AM by KBerard Plotted: 12/15/2022 9:37 AM by Kevin Berard