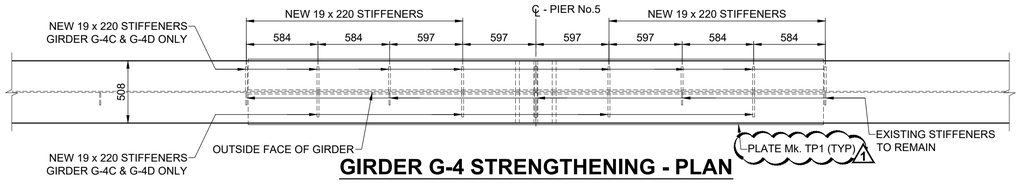

GIRDER G-4 STRENGTHENING - PLAN

SCALE 1:25

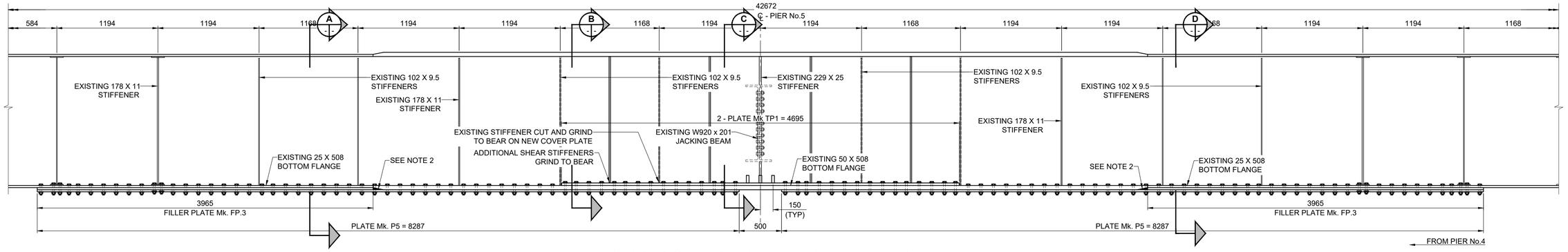

GIRDER G4 STRENGTHENING - ELEVATION

EXTERIOR GIRDERS G-4, G-4C, G-4D, G-4G

SCALE 1:25

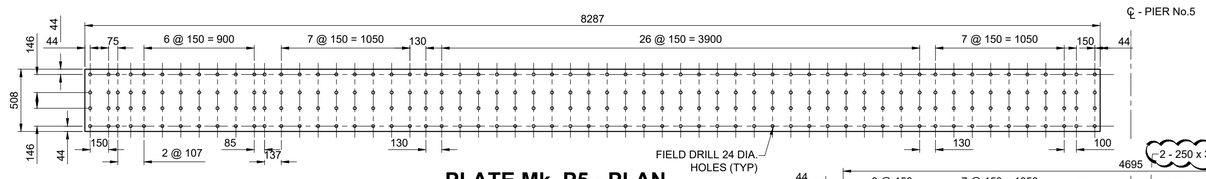

PLATE Mk. P5 - PLAN

SCALE 1:25

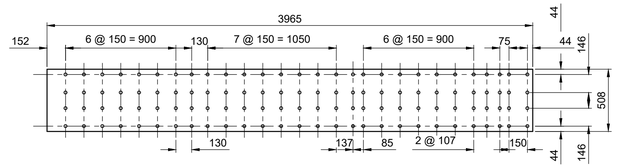

PLATE Mk. FP3 - PLAN

SCALE 1:25

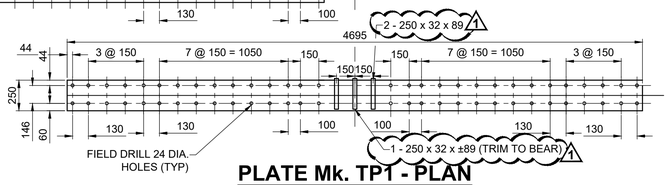

PLATE Mk. TP1 - PLAN

SCALE 1:25

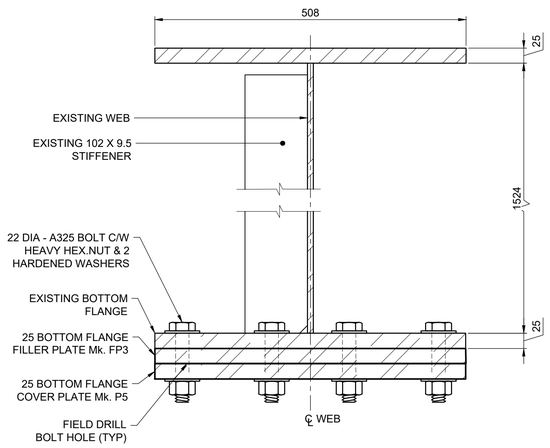

A

GIRDER STRENGETHENING - SECTION

BOTTOM FLANGE

SCALE: 1:5

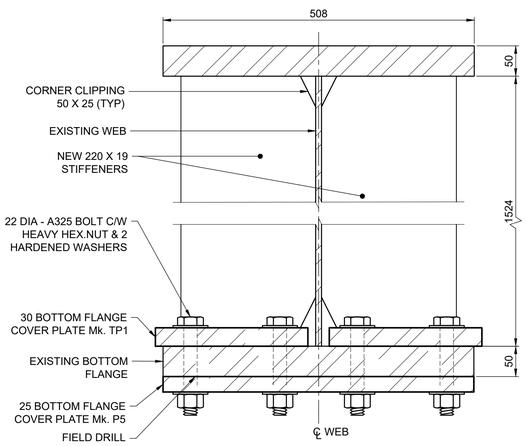

B

GIRDER STRENGETHENING - SECTION

BOTTOM FLANGE

SCALE: 1:5

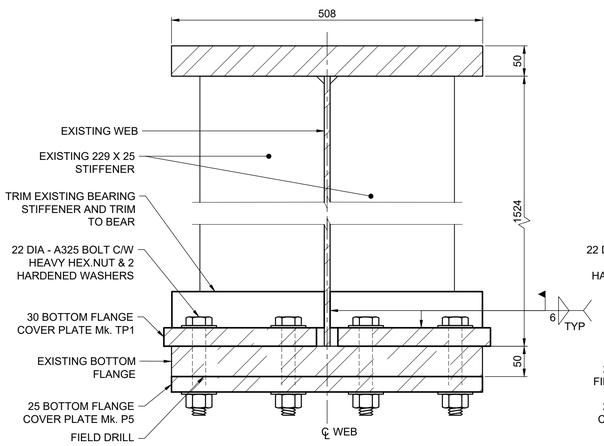

C

GIRDER STRENGETHENING - SECTION

BOTTOM FLANGE

SCALE: 1:5

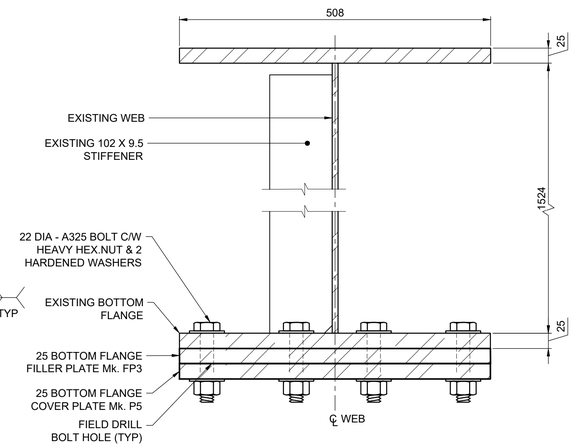

D

GIRDER STRENGETHENING - SECTION

BOTTOM FLANGE

SCALE: 1:5

ENGINEERS GEOSCIENTISTS MANITOBA
Certificate of Authorization
MORRISON HERSHFIELD
No. 1736

TENDER No. 615-2022

NOTES:

1. ALL DIMENSIONS ARE CORRECT TO 40 °F (4.44 °C) IN ACCORDANCE WITH THE ORIGINAL STRUCTURE DRAWINGS. CONTRACTOR TO VERIFY DIMENSIONS WITH FIELD MEASUREMENTS PRIOR TO FABRICATION OF STRUCTURAL STEEL.
2. CONTRACTOR TO FABRICATE A TAPERED STEEL SHIM AT BOTTOM FLANGE THICKNESS TRANSITIONS AS REQUIRED.
3. ALL AREAS OF EXISTING STRUCTURAL STEEL TO BE STRENGTHENED SHALL BE BLAST CLEANED AND WASHED FREE OF CONTAMINANTS PRIOR TO INSTALLATION OF STRENGTHENING. AT LOCATIONS OF SHEAR STRENGTHENING REMOVAL SHALL BE LIMITED TO EXTENTS REQUIRED FOR FIELD WELDING OF NEW STIFFENER.

METRIC
WHOLE NUMBERS INDICATE MILLIMETRES
DECIMALIZED NUMBERS INDICATE METRES

LOCATION APPROVED
UNDERGROUND STRUCTURES

SUPR. U/G STRUCTURES COMMITTEE — DATE

NOTE:
LOCATION OF UNDERGROUND STRUCTURES AS SHOWN ARE BASED ON THE BEST INFORMATION AVAILABLE BUT NO GUARANTEE IS GIVEN THAT ALL EXISTING UTILITIES ARE SHOWN OR THAT THE GIVEN LOCATIONS ARE EXACT. CONFIRMATION OF EXISTENCE AND EXACT LOCATION OF ALL SERVICES MUST BE OBTAINED FROM THE INDIVIDUAL UTILITIES BEFORE PROCEEDING WITH CONSTRUCTION.

BM 54-006 — Tblt. in S. face of E. Conc. pier in 1st row of Conc. piers N. of S. end of St. Vital Bridge over Red River, N. of Kingston Row, 5 m W. of E. end of Pier.
ELEV 228.166 m

No.	REVISIONS	YY/MM/DD	BY
1	REVISED FOR ADDENDUM 2	23/01/09	BAP
0	ISSUED FOR TENDER	22/11/24	BAP

MORRISON HERSHFIELD

DESIGNED BY	TN	CHECKED BY	JM
DRAWN BY	AH	APPROVED BY	BE
HOR SCALE	AS SHOWN	RELEASED FOR CONSTRUCTION	
VERT SCALE			
DATE	NOV 24, 2022	DATE	

PROFESSIONAL'S SEAL
PROVINCE OF MANITOBA
T.A.B. NEIRINCK
Member
37947
2023-01-10
REGISTERED PROFESSIONAL ENGINEER

CONSULTANT FILE NAME
2103510-SVB DD-BR-GIRDER08.dwg

Winnipeg

THE CITY OF WINNIPEG
PUBLIC WORKS DEPARTMENT
ENGINEERING DIVISION

ST. VITAL TWIN BRIDGE OVER THE RED RIVER REHABILITATION AND RELATED WORKS

BRIDGE REHABILITATION
GIRDER STRENGTHENING GIRDER G4 PIER No.5 1 OF 2

CITY FILE NUMBER: B116-24-63
SHEET 149 OF 244
DRAWING NUMBER: 149

ISO A1 - 594mm x 841mm
X:\Prog\2021\2103510\00-St Vital Bridge over Red River PD\09. CAD\07 Sheets\Structural\Detailed Design\2103510-SVB DD-BR-GIRDER08.dwg Last Saved: 11/25/2022 11:56 AM by aheppner Plotted: 1/6/2023 12:25 PM by Alex Heppner