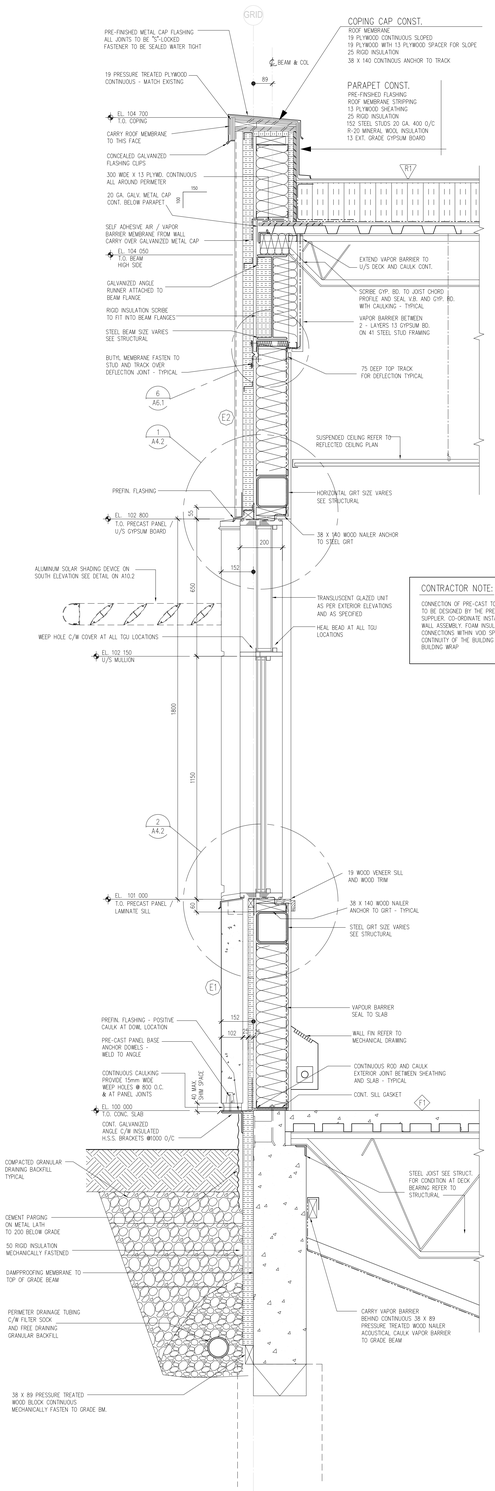


**1 / A6.1** TYPICAL WALL SECTION AT PUNCHED WINDOWS

SCALE: 1 : 10

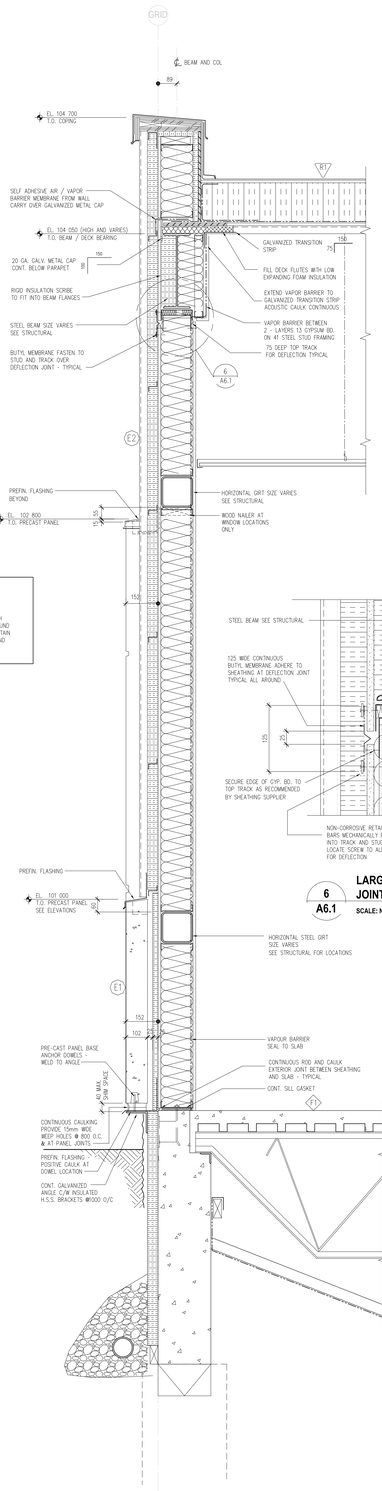


**2 / A6.1** TYPICAL WALL SECTION AT LOW HT. PRE-CAST PANELS

SCALE: 1 : 10

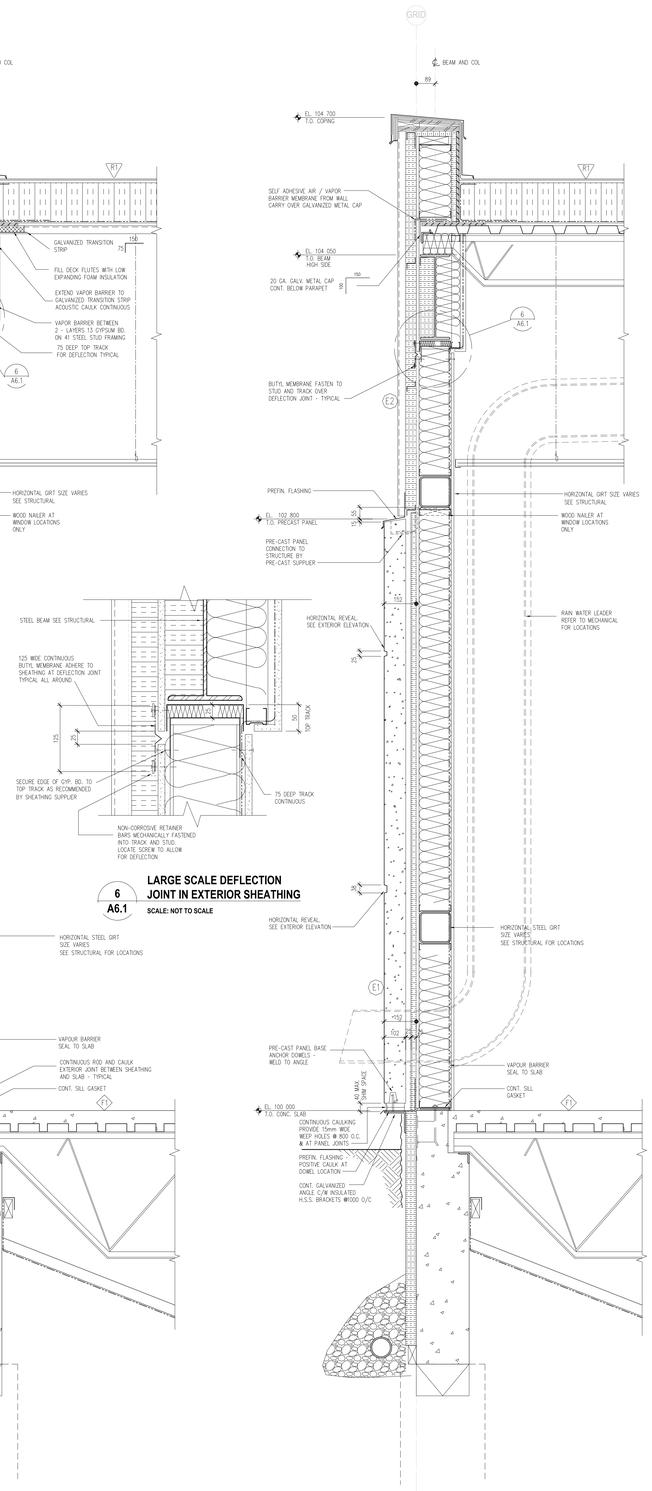


**6 / A6.1** LARGE SCALE DEFLECTION JOINT IN EXTERIOR SHEATHING

SCALE: NOT TO SCALE

**3 / A6.1** TYPICAL WALL SECTION AT PRE-CAST PANELS

SCALE: 1 : 10

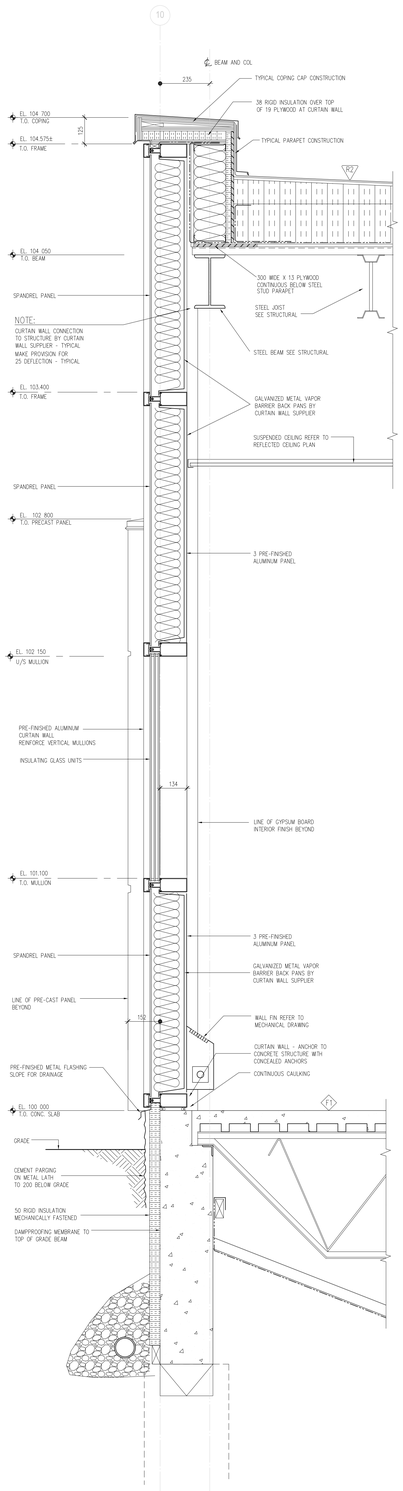


**4 / A6.1** WALL SECTION AT CURTAIN WALL AT GRID 10 - R

SCALE: 1 : 10

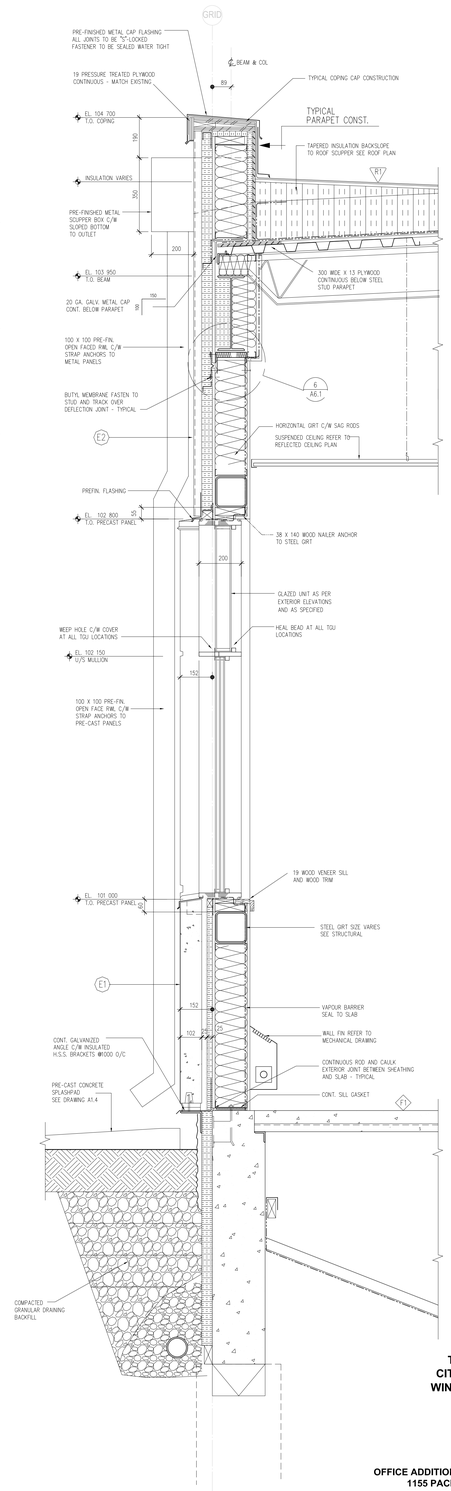


**5 / A6.1** WALL SECTION AT ROOF SCUPPER LOCATIONS

SCALE: 1 : 10


Friesen Tokar Architects
200 - 2033 Portage Avenue
Winnipeg, Canada R3J 0K8
Tel. 204.885.9323
Fax. 204.837.7235


DRAWN BY: DG
CHECKED BY: AG DG
DATE: MAY 2004
PROJECT NO.: 01.716
FILE / PATH:

ISSUES:
1. ISSUED FOR 50% REVIEW FEBRUARY 05, 2004
2. ISSUED FOR 75% REVIEW MARCH 04, 2004
3. ISSUED FOR 99% PRE-TENDER REVIEW APRIL 2004
4. ISSUED FOR TENDER MAY 14, 2004

REVISIONS:

SUBCONSULTANT:

SEALS:


Drawings and specifications, as instruments of service are the property of the architect, the copyright in the same being reserved to him. No reproduction may be made without the permission of the architect and when made, must bear his name. All prints to be returned to the architect.
The contractor shall verify dimensions and data noted herein with conditions on the site and is held responsible for reporting any discrepancy to the architect for adjustment.
This drawing shall not be used for building purposes until countersigned by:


CLIENT:

THE CITY OF WINNIPEG

PROJECT TITLE:

OFFICE ADDITION AND RENOVATION
1155 PACIFIC AVENUE
WINNIPEG, MANITOBA

FRIESEN TOKAR ARCHITECTS

CONTENTS: WALL SECTIONS AND DETAILS

DRAWING: A6.1