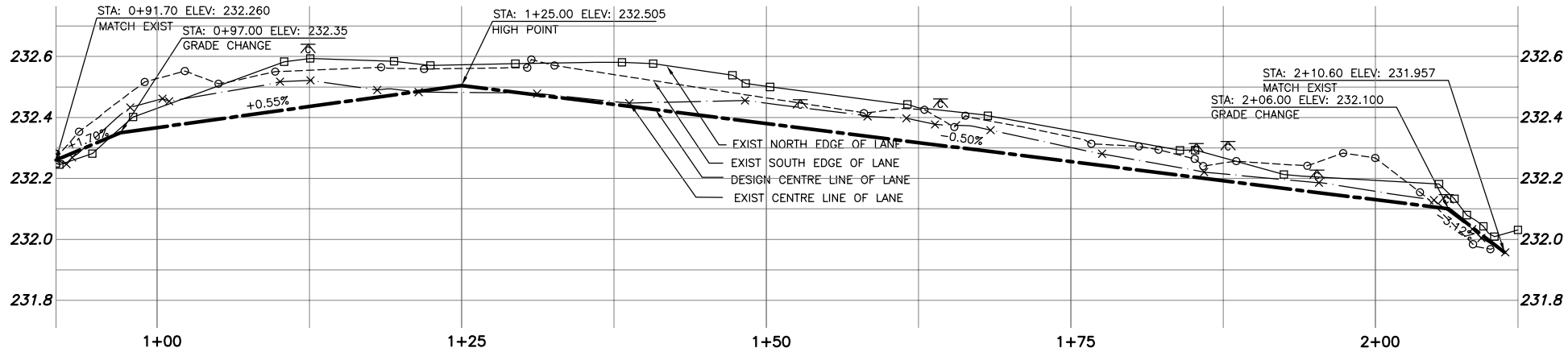

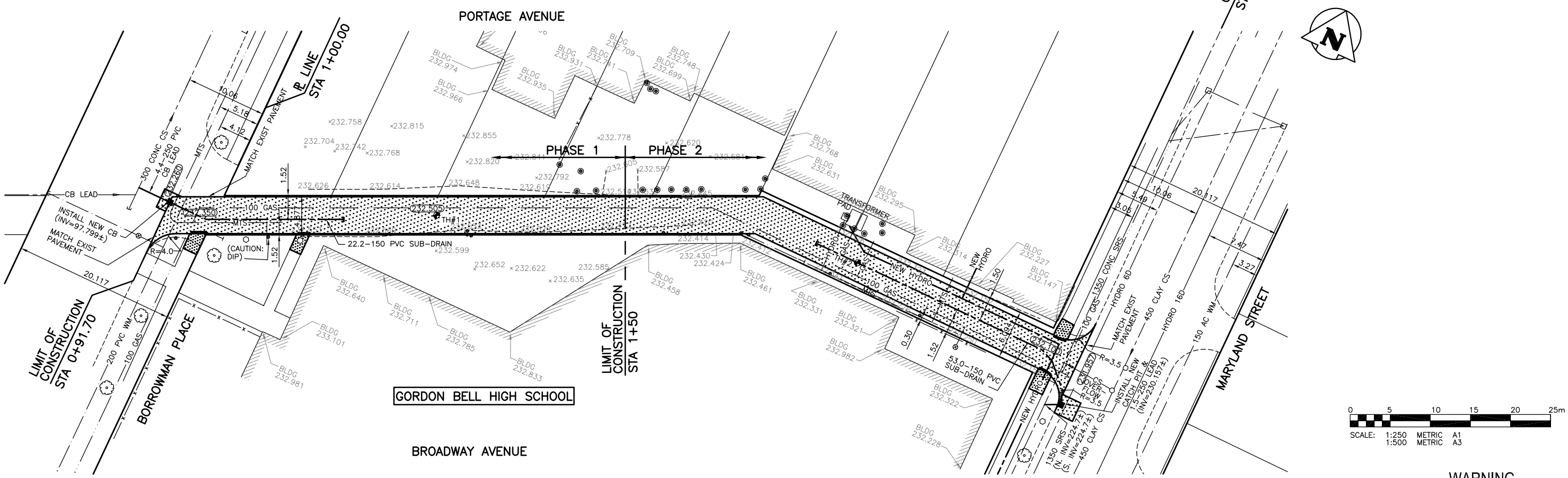

WARNING

IF POWER EQUIPMENT OR EXPLOSIVES ARE TO BE USED FOR EXCAVATION ON THIS PROJECT THE CONTRACTOR MUST:
1) NOTIFY THE GAS COMPANY OF THE PROPOSED LOCATION OF EXCAVATION.
2) TAKE PRECAUTION OT AVOID DAMAGE TO GAS COMPANY INSTALLATIONS.
SEE PROVINCIAL REGULATION 210/72 FOR DETAILS.

METRIC

WHOLE NUMBERS INDICATE MILLIMETRES
DECIMALIZED NUMBERS INDICATE METRES

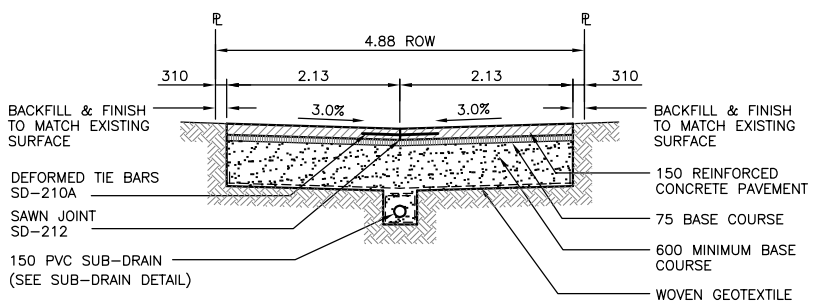

CROSS SECTION
(STA 0+91.7 TO STA 1+65.57)
SCALE: 1:50

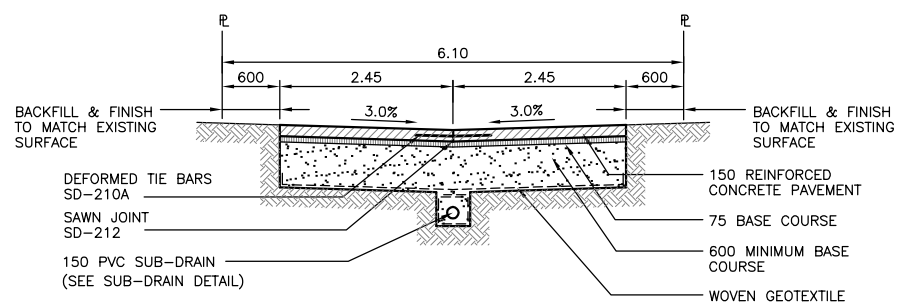

CROSS SECTION
(STA 1+65.57 TO STA 2+10.59)
SCALE: 1:50

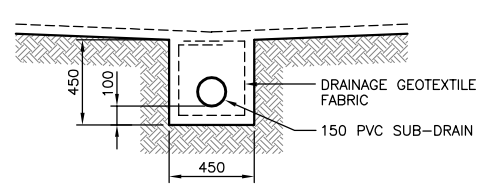

SUB-DRAIN DETAIL
SCALE: 1:20

APEGM
Certificate of Authorization
KGS Group
No. 245 Expiry: April 30, 2005

				BOLLARD				
SUB-DRAIN	SUB-DRAIN	SUB-DRAIN		POLES T-MTS H-HYDRO				
300 LDS	LAND DRAINAGE SEWER	300 LDS		TEST HOLE				
250 WWS	WASTE WATER SEWER	250 WWS		GUY WIRE				
	GAS			LIGHT STANDARD				
	HYDRO			BACK OF CURB				
	M.T.S.			CONCRETE				
150 WM	WATERMAIN	150 WM		ASPHALT				
	HYDRANT			SIDEWALK			℄ PROFILE	
	VALVE			PROPERTY LINE			N/W LANE EDGE	
	MANHOLE			SURVEY BAR			S/E LANE EDGE	
	CATCH BASIN			GEODETIC BENCHMARK			PARKING/DRIVEWAY	
	CURB INLET		231.334	ELEVATION	32.231		WINDOW/DOOR SILL	
EXISTING	LEGEND-PLAN	PROPOSED	EXISTING	LEGEND-PLAN	PROPOSED	EXISTING	LEGEND-PROFILE	PROPOSED

COWLEGEND

LOCATION APPROVED
UNDERGROUND STRUCTURES

SUPV. U/G STRUCTURES COMMITTEE DATE

NOTE:
LOCATION OF UNDERGROUND STRUCTURES AS SHOWN ARE BASED ON THE BEST INFORMATION AVAILABLE BUT NO GUARANTEE IS GIVEN THAT ALL EXISTING UTILITIES ARE SHOWN OR THAT THE GIVEN LOCATIONS ARE EXACT. CONFIRMATION OF EXISTENCE AND EXACT LOCATION OF ALL SERVICES MUST BE OBTAINED FROM THE INDIVIDUAL UTILITIES BEFORE PROCEEDING WITH CONSTRUCTION.

B.M. 37-048
ELEV. 232.699m

S.E. COR. BROADWAY & MARYLAND ST., TBLT. IN W. CONC. FOUNDATION NO. 720 BROADWAY, 1m S. & 0.1m BELOW BRICK OF N.E. COR. OF BLDG.

NO.	REVISIONS	DATE	BY
0	ISSUED FOR TENDER	26/05/04	CR
A	ISSUED FOR REVIEW	14/05/04	CR

KGS GROUP
CONSULTING ENGINEERS & PROJECT MANAGERS
WINNIPEG (204) 896-1209
THUNDER BAY (807) 345-2233

DESIGNED BY	B.S.	CHECKED BY	C.R.
DRAWN BY	D.W.	APPROVED BY	R.J.H.
HOR. SCALE:	1:250	RELEASED FOR CONSTRUCTION:	
VERTICAL:	1:10		
DATE	15 JANUARY, 2004	DATE	

ENGINEER'S SEAL
PROVINCE OF MANITOBA
M.C. ROWBOTHAM
Member 22679
REGISTERED PROFESSIONAL ENGINEER

CONSULTANT DRAWING NO.
03-107-15

Winnipeg
THE CITY OF WINNIPEG
PUBLIC WORKS DEPARTMENT
ENGINEERING SERVICES DIVISION

PROJECT TITLE
2004 ALLEY RENEWALS
PORTAGE AVE. SOUTH LANE
BORROWMAN PL. TO MARYLAND ST.

SHEET 01 OF 12
COMPUTER FILE NAME 03-107-15
CITY DRAWING NUMBER •