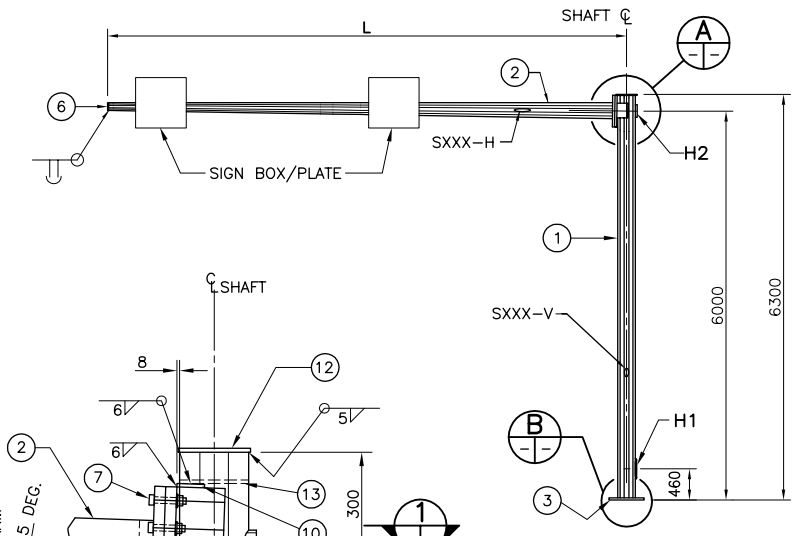

ELEVATION

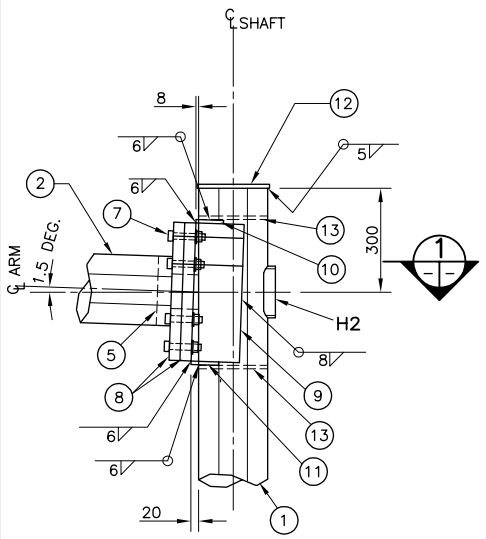

DETAIL A

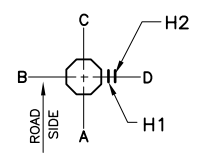

ORIENTATION

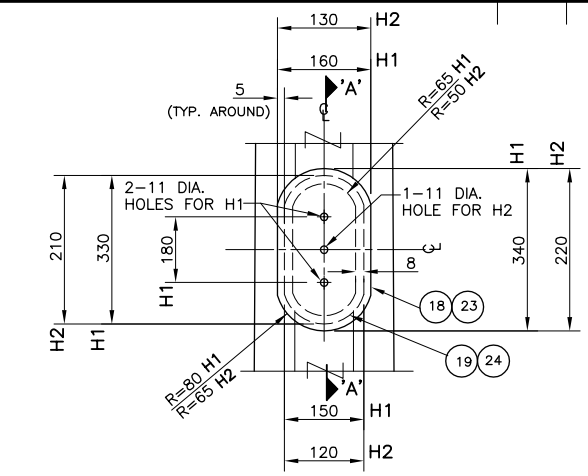

FRONT-ELEVATION

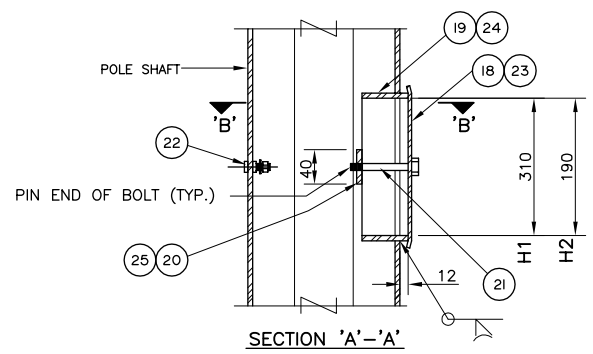

SECTION 'A'-'A'

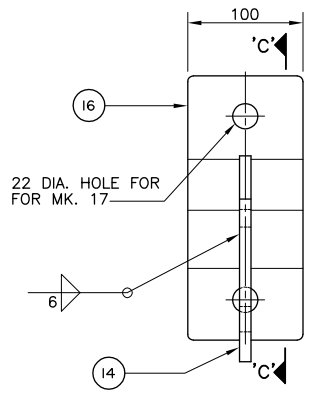

ELEVATION

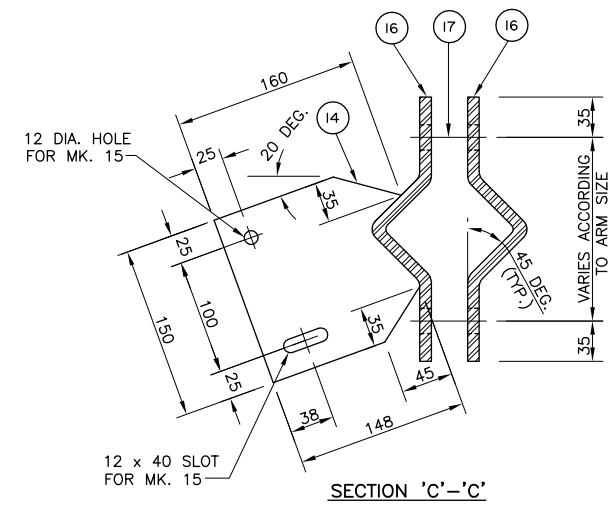

SECTION 'C'-'C'

SIGN MOUNTING BRACKET DETAIL
(FOR SIGN BOXES ONLY)

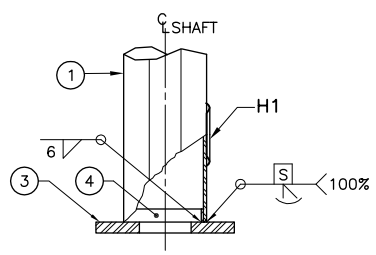

DETAIL B

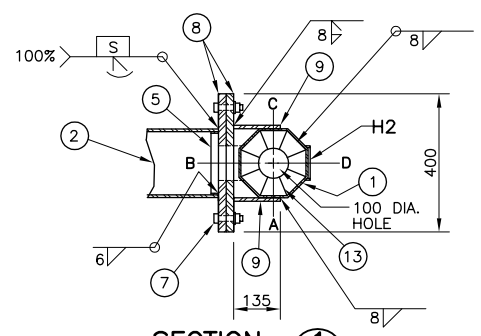

SECTION 1

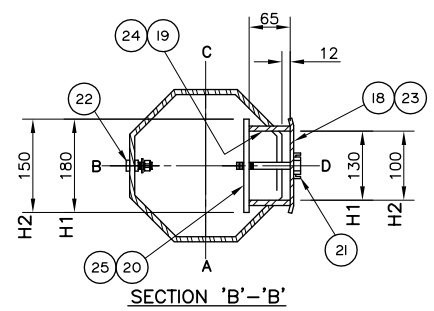

SECTION 'B'-'B'

HANDHOLE-MARK H1 & H2

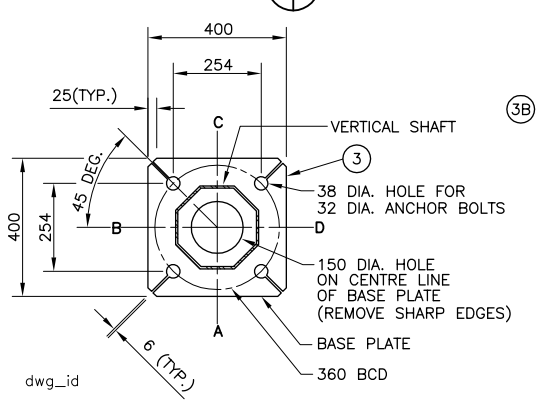

BASE PLATE DETAIL

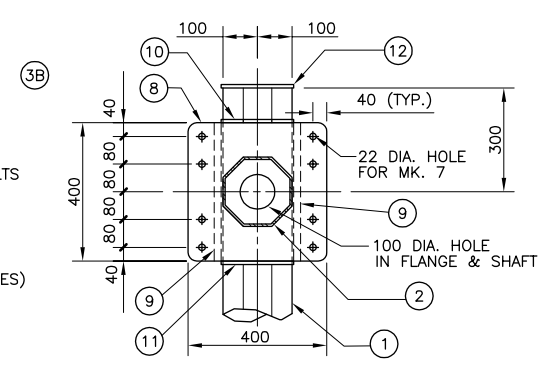

FLANGE PLATE DETAIL

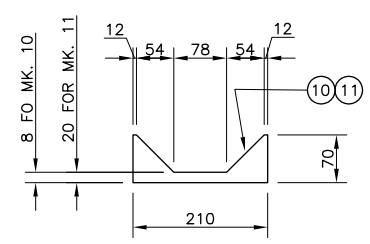

GUSSET PLATE
MARK 10 & 11

BILL OF MATERIALS

MK.	QTY.	DESCRIPTION
1	1	OCTAGONAL SHAFT 240 A/F TO 200 A/F x 6.35
2	1	OCTAGONAL ARM 200 A/F TO 130 A/F x 6.35
3	1	BASE PLATE 40 THICK
4	1	BACKUP STRIP 40 x 6
5	1	BACKUP STRIP 40 x 6
6	1	END PLATE 130 A/F OCTAGONAL 6 THICK
7	8	19 DIA. A325 BOLTS GALVANIZED
8	2	FLANGE PLATE 400 x 400 x 32
9	2	SIDE GUSSET PLATE 20 x 400 x 135
10	1	TOP GUSSET PLATE 10 THICK
11	1	BOTTOM GUSSET PLATE 10 THICK
12	1	COVER PLATE 210 DIA x 10 THICK
13	2	OCTAGONAL INTERIOR GUSSET PLATE 8 THICK
		SIGN MOUNTING BRACKETS (4-REQ'D.)
14	4	BRACKET PLATE 10 THICK
* 15	8	10 DIA. BOLTS S/S (TYPE 316)
16	8	CLAMP PLATE 10 THICK
* 17	8	20 DIA. BOLT S/S (TYPE 316)
		HANDHOLE MARK H1
18	1	COVER PLATE 11 GA. x 160x 340 (A569)
19	1	REINFORCING RING 8 x 65 x 830
* 20	2	CLAMP BAR 6 x 40 x 180
* 21	2	10 DIA. x 140 BOLT S/S (TYPE 316)
* 22	1	GROUND STUD ASSEMBLY 10 DIA. x 40
		HANDHOLE MARK H2
23	1	COVER PLATE 11 GA. x 130 x 220 (A569)
24	1	REINFORCING RING 8 x 65 x 555
* 25	1	CLAMP BAR 6 x 40 x 150
* 21	1	10 DIA. x 140 BOLT S/S (TYPE 316)
* 22	1	GROUND STUD ASSEMBLY 10 DIA. x 40

*NOTES:

1. MARK NO. 15 & 17 C/W NUT AND WASHER.
2. MARK NO. 20 & 25 C/W 8-DIA. PUNCHED 10 N.C. TAPPED AT THE CENTER OF PLATE.
3. MARK NO. 21 C/W CUP WASHER.
4. MARK NO. 22 C/W 2-10 DIA. HEX NUT, 2-TERMINAL WASHER. & 1-LOCKWASHER

NEW STRUCTURES INSTALLATION SCHEDULE

ITEM NO.	STRUCTURE	L	LOCATION
1			
2			
3			

NONE REQUIRED

GENERAL NOTES

1. DESIGN DATA
   AASHTO STANDARD SPECIFICATIONS FOR STRUCTURAL SUPPORTS FOR HIGHWAY SIGNS, LUMINAIRES, AND TRAFFIC SIGNALS, 4TH EDITION, 2001.

   DESIGN WIND LOAD = 1.44 kPa (30 PSF)

   DESIGN ICE LOAD = 0.15 kPa (3 PSF)
2. ALL MATERIALS SHALL BE CSA G40.21 - 350W STRUCTURAL STEEL UNLESS OTHERWISE NOTED.
3. ALL MATERIALS EXCEPT STAINLESS STEEL AND ALUMINUM SHALL BE HOT-DIP GALVANIZED IN ACCORDANCE WITH CSA G164 TO A MIN. NET RETENSION OF 600 g/m^2
4. ALL AREAS OF DAMAGED GALVANIZING SHALL BE REPAIRED WITH SELF-FLUXING LOW TEMPERATURE, ZINC BASED ALLOY ROD OR SPRAY-ON COATING CALLED *ZINGA*.
5. NEW STRUCTURE TO BE INSTALLED ON CONCRETE PILE FOUNDATION (SEE DWG. NO. 04)
6. ANCHOR BOLTS (SEE DWG. NO. 04)
7. SIGNS
   TWO SIGNS (PLATES OR INTERNALLY ILLUMINATED) MAXIMUM SIZE 915 x 915 mm. SUPPLIED AND INSTALLED (C/W BRACKETS) BY THE CITY OF WINNIPEG SIGNALS BRANCH.

NOTES

1. PROVIDE "RAISED" IDENTIFICATION NO. WITH WELDING ELECTRODE FOR THE SIGN STRUCTURE.
2. SUBSTITUTE STRUCTURE No. FOR XXX
3. GRIND ALL SHARP POINTS AND EDGES.

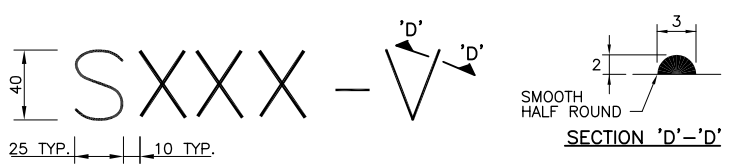

TYPICAL STRUCTURE IDENTIFICATION NUMBER SIZE

B.M. ELEV.			
NO.	REVISIONS	DATE	BY

DESIGNED BY:	S.S.R.
DRAWN BY:	N.B.G.
CHECKED BY:	S.S.R.
APPROVED BY:	
SCALE: HORZ. / VERT.	AS SHOWN
DATE:	JULY 2004
AUTHORIZED BY:	DATE:
CITY BRIDGE ENGINEER	

DILLON CONSULTING

ENGINEER'S SEAL: PROVINCE OF MANITOBA — S.S. RIHAL — REGISTERED PROFESSIONAL ENGINEER

CONSULTANT PROJECT NO. 04-3144-1000

THE CITY OF WINNIPEG
PUBLIC WORKS DEPARTMENT

OVERHEAD SIGN SUPPORT STRUCTURE MAINTENANCE WORKS 2004 PROGRAM

CITY DRAWING NUMBER OHSS-04-07

SHEET 7 OF 7

NEW CANTILEVER SIGN STRUCTURE FABRICATION DETAILS