ITEM No.	No. REQ'D	DESCRIPTION	MATERIAL	DWG. No.

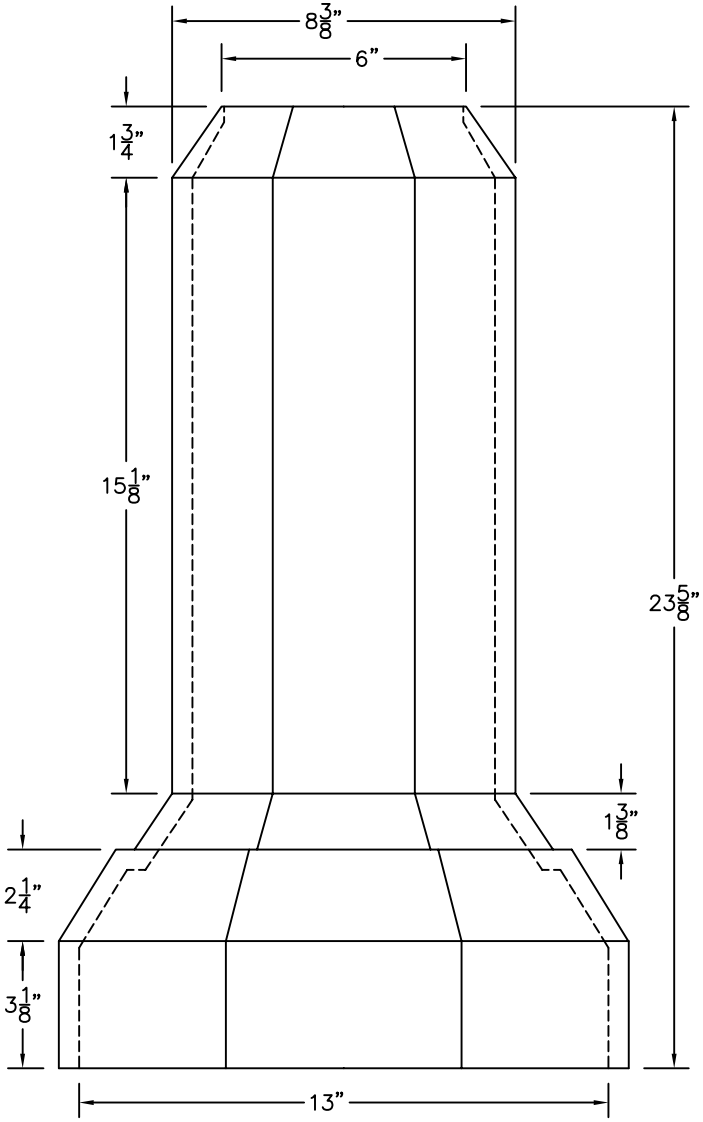

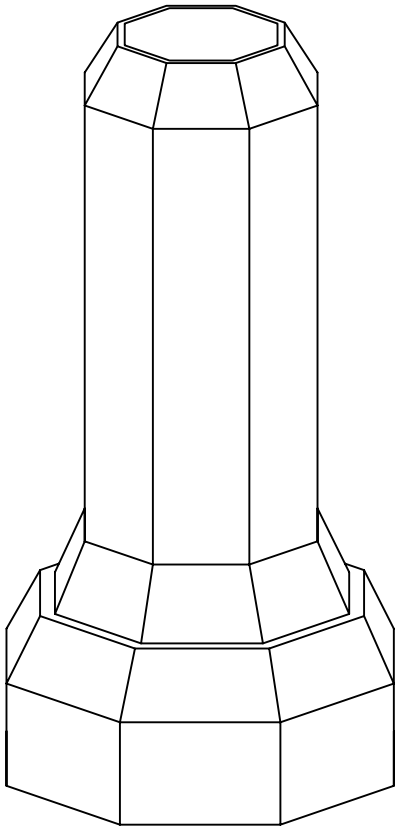

No. REQ'D.	W.O. No.	FILE No.	DATE	P.O. No.	CUSTOMER	LOCATION

REV.No.	CHANGE	BY	APP.	DATE

MTM

1450 SASKATCHEWAN AVENUE
WINNIPEG, MANITOBA. R3E 0L3
MAILING ADDRESS;
P.O. BOX 45021, RPO REGENT
WINNIPEG, MANITOBA. R2C 5C7
TEL: (204)987-3110 FAX: (204)775-9066

TITLE

BROADWAY DECORATIVE CASTING

DRAWN BY	G.G.	APP. BY		DWG. No.	REV. No.	SHT. 1 of 1 SHTS.
DATE	MAY 98	SCALE	NTS	BROADWAY	0	