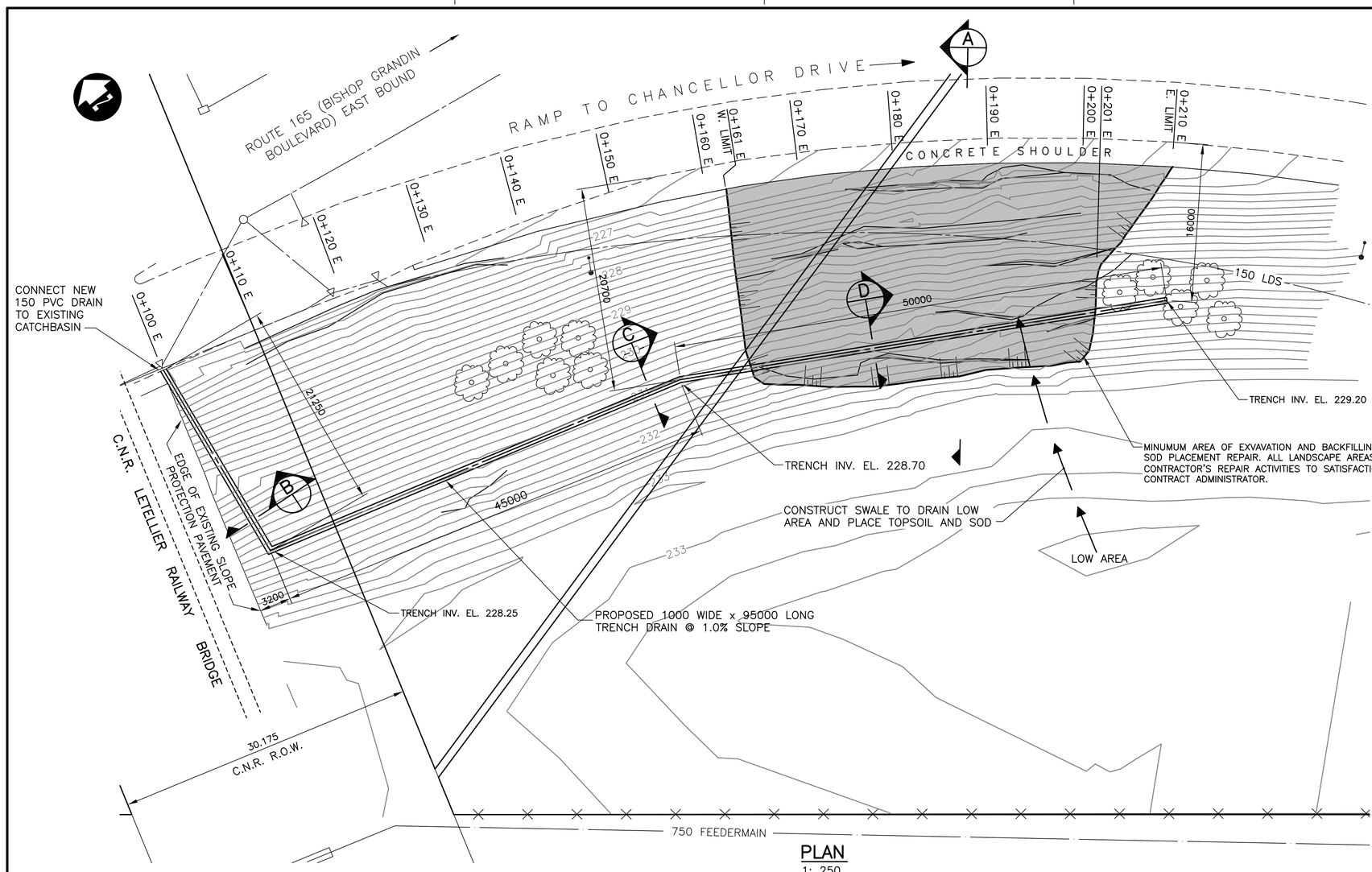

PLAN
1: 250

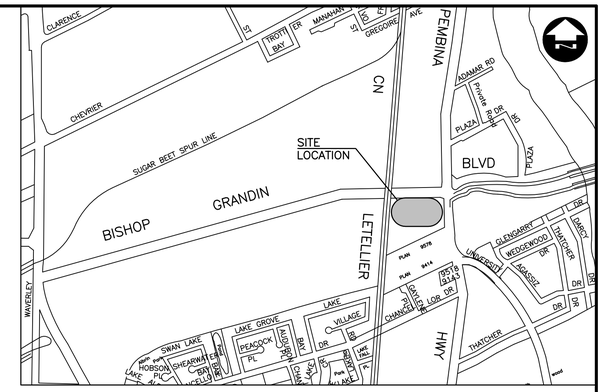

LOCATION PLAN

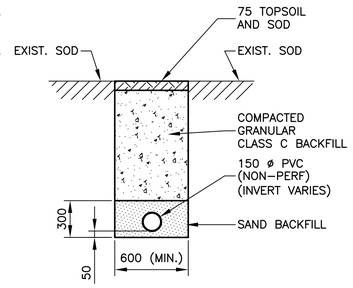

SECTION B
1: 25

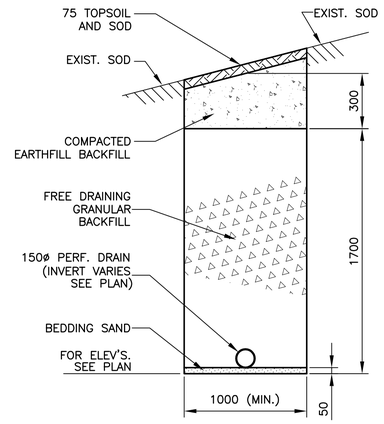

SECTION C
N.T.S.

PROPOSED TRENCH
AS SHOWN

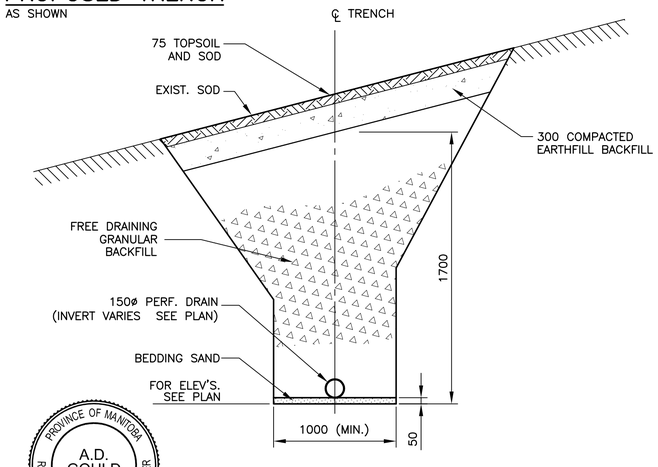

SECTION D
N.T.S.

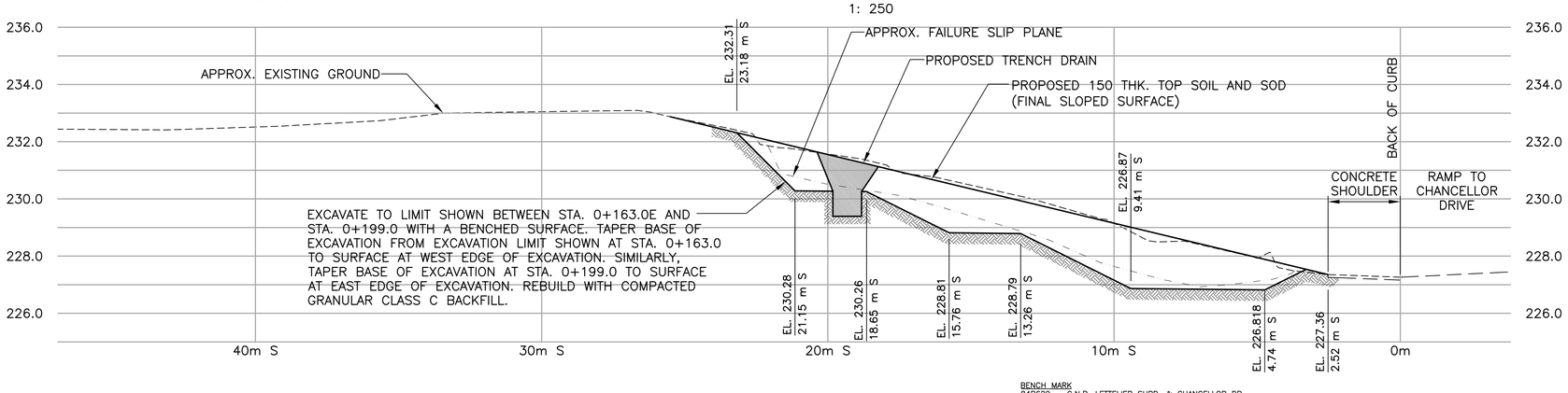

SECTION A
(STA. 0+188 E)
SCALE 1 : 100

BENCH MARK
84R629 – C.N.R. LETTELIER SUBD. & CHANCELLOR DR., TBLT. ON TOP OF 0.05m DIA. x 2.4m IRON PIPE, ON S.L. OF CHANCELLOR DR. & 22.5m W. OF C.L. OF RAILWAY TRACK ON C.N.R. LETTELIER SUBD., OR 45m W. OF W.L. C.N.R. LETTELIER SUBD. & ON S.L. OF CHANCELLOR DR.

B.M. 76–047
ELEV. 232.905m

WARNING

CONTRACTOR TO OBTAIN UTILITY CLEARANCES PRIOR TO COMMENCING EXCAVATION.

UNDERGROUND INFORMATION SHOWN ON THIS DRAWING IS BASED ON INFORMATION RECEIVED FROM THE CITY OF WINNIPEG UNDERGROUND STRUCTURES AND MAY NOT BE ENTIRELY ACCURATE OR COMPLETE.

METRIC
WHOLE NUMBERS INDICATE MILLIMETRES
DECIMALIZED NUMBERS INDICATE METRES

APEGM
Certificate of Authorization
Dillon Consulting Limited
No. 1789 Expiry: April 30, 2006

NO.	REVISIONS	DATE	BY
1	ISSUED FOR TENDER	08/31/05	R.A.W.

DESIGNED BY: A.D.G./R.A.W.
DRAWN BY: A.J.P./S.K.B.
CHECKED BY: R.A.W.
APPROVED BY:
SCALE: HORZ. AS SHOWN VERT.
DATE: 08/31/05
AUTHORIZED BY: DATE:
CITY BRIDGE ENGINEER

DILLON CONSULTING

ENGINEER'S SEAL
PROVINCE OF MANITOBA R.A. WIEBE REGISTERED PROFESSIONAL ENGINEER

PROVINCE OF MANITOBA A.D. GOULD REGISTERED PROFESSIONAL ENGINEER

CONSULTANT PROJECT NO. 05–4421–1001

THE CITY OF WINNIPEG
PUBLIC WORKS DEPARTMENT
Winnipeg

2005 BRIDGE MAINTENANCE
ROUTE 165 UNDERPASS UNDER CNR LETELLIER SUBDIVISION–S.E. QUADRANT
SLOPE FAILURE REPAIR

PLAN, SECTIONS AND DETAILS

CITY DRAWING NUMBER U230–05–02
SHEET 2 OF 2