D SIZE 22" x 34" (559mm x 864mm)

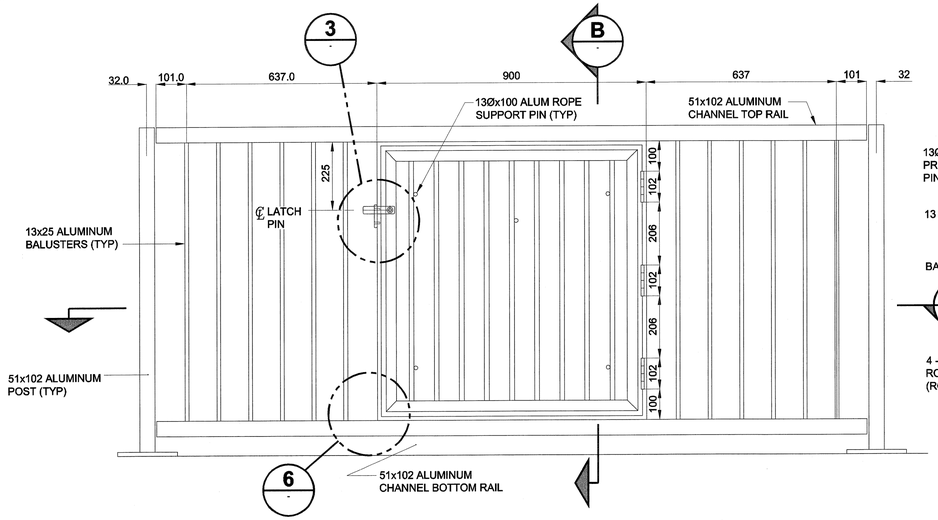

FRONT ELEVATION (PANEL 'E7')

SCALE 1:10 (0 100 200 300 mm)

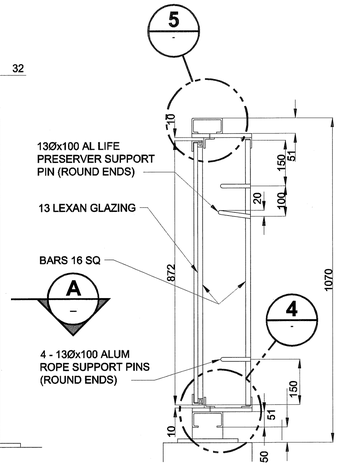

SECTION B

SCALE 1:10 (0 10 20 30 mm)

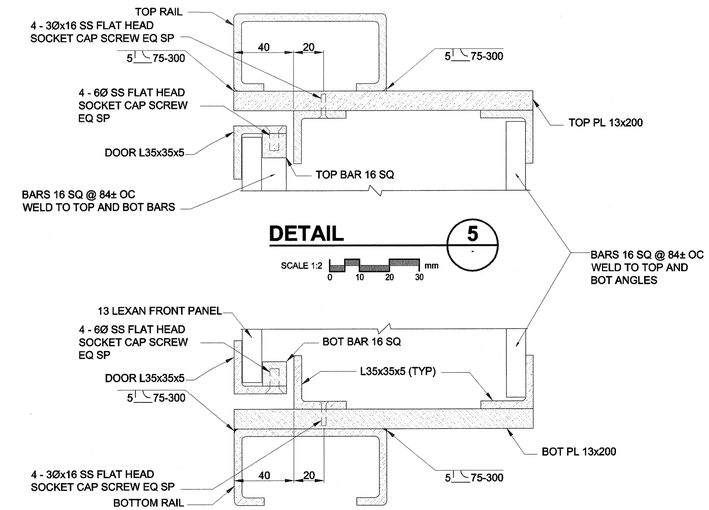

DETAIL 5

SCALE 1:2 (0 10 20 30 mm)

DETAIL 4

SCALE 1:2 (0 10 20 30 mm)

DRAWING NOTES

1. THIS DRAWING IS TO BE READ IN CONJUNTION WITH DWG 53 AND THE SPECIFICATIONS.
2. ALUMINUM EXTRUSIONS SHALL CONFORM TO ASTM B221, ALLOY 6351-T6. ALUMINUM PLATES SHALL CONFORM TO ASTM B221, ALLOY 5083.
3. ALUMINUM FILLER ALLOYS FOR WELDED CONSTRUCTION SHALL BE DONE OF THE FOLLOWING: ER4043, ER5183, ER5356, ER5554, ER5556, AND ER5654.
4. DRILL AND TAP HOLES FOR STAINLESS STEEL FLAT HEAD SOCKET CAP SCREWS.
5. INSTALL STAINLESS STEEL CAP SCREWS THROUGH ENTIRE THICKNESS OF ADJOINING MEMBER, THEN CUT AND GRIND FLUSH.

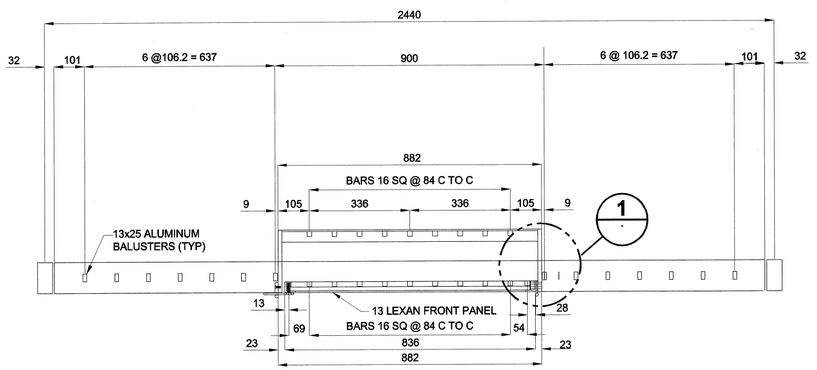

SECTION A

SCALE 1:10 (0 10 20 30 mm)

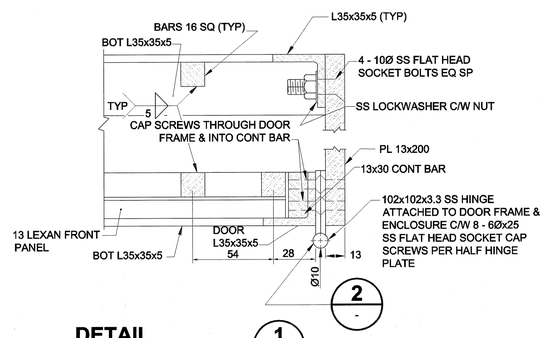

DETAIL 1

SCALE 1:2 (0 10 20 30 mm)

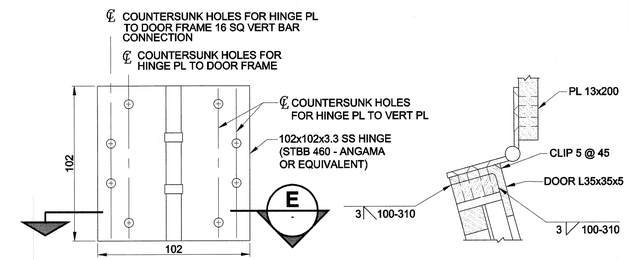

DETAIL 2

SCALE 1:2 (0 10 20 30 mm)

SECTION E

SCALE 1:2 (0 10 20 30 mm)

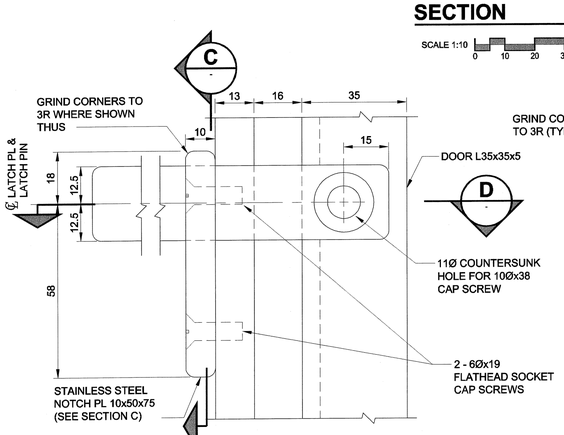

DETAIL 3

SCALE 1:1 (0 10 20 30 mm)

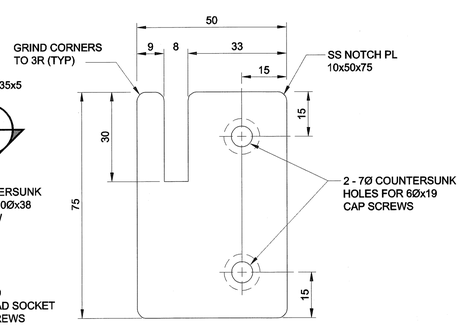

SECTION C

SCALE 1:1 (0 10 20 30 mm)

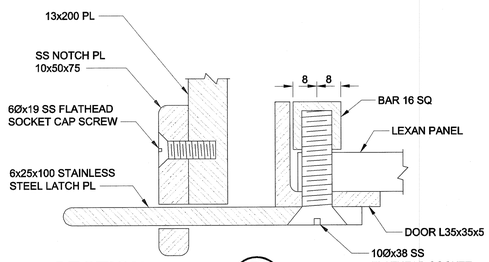

SECTION D

SCALE 1:1 (0 10 20 30 mm)

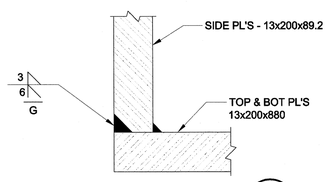

DETAIL 6

SCALE 1:1 (0 10 20 30 mm)

NOTE:

ALL DIMENSIONS SHOWN ON THE DRAWINGS ARE BASED ON AVAILABLE INFORMATION AND RECORD DRAWINGS. THE CONTRACTOR SHALL FIELD MEASURE AND VERIFY ALL DIMENSIONS PRIOR TO COMMENCING CONSTRUCTION OR PRIOR TO PREPARATION OF SHOP DRAWINGS. THE CONTRACTOR SHALL MAKE THE APPROPRIATE ADJUSTMENTS TO THE APPLICABLE DETAILS AND DIMENSIONS ACCEPTABLE TO THE CONTRACT ADMINISTRATOR. THE CONTRACTOR SHALL THEN FABRICATE AND CONSTRUCT THE WORKS IN ACCORDANCE WITH THE CORRECTED DIMENSIONS.

METRIC
WHOLE NUMBERS INDICATE MILLIMETRES
DECIMALIZED NUMBERS INDICATE METRES

APEGM
Certificate of Authorization
UMA Engineering Ltd.
No. 256 Expiry: April 30, 2006

Bid Opportunity No. 257-2005

NO.	REVISIONS	YY/MM/DD	BY
0	ISSUED FOR CONSTRUCTION	05/07/05	MP

UMA Engineering Ltd.
• Consulting • Engineering • Construction • Management Services

DESIGNED BY	BLL	CHECKED BY	SBB
DRAWN BY	RB	APPROVED BY	BWB
HOR. SCALE	AS SHOWN	ACCEPTED BY	
VERT. SCALE	AS SHOWN		
DATE		DATE	2005 07 07

ENGINEER'S SEAL
PROVINCE OF MANITOBA
B.L. LAU
July 6, 2005
REGISTERED PROFESSIONAL ENGINEER

CONSULTANT DRAWING NO. 56
0265-376-00

Winnipeg

THE CITY OF WINNIPEG
PUBLIC WORKS DEPARTMENT

REDWOOD BRIDGE
REHABILITATIVE MAINTENANCE AND RELATED WORKS
ALUMINUM PEDESTRIAN HANDRAIL
LIFE PRESERVER ENCLOSURE
ELEVATIONS, SECTIONS AND DETAILS

CITY DRAWING NUMBER B113-05-56
SHEET 56 OF 74
56
REV 0

PLOT SCALE 1=1
AutoCAD 15.06 P:\0265\355-03\AutoCAD\S-11 Working Drawings\0265-355-03_01-S-0056_RX.dwg 2003-08-20 3:22pm CGC