FILE NAME: 2004180V0.dwg/A4

DATE: 2005.05.24

DESCRIPTION: SECOND FLOOR PLAN -MILLWORK & ELEVATIONS

PROJECT No: 2004-180

ADDRESS: 510 MAIN ST.

NOTES :

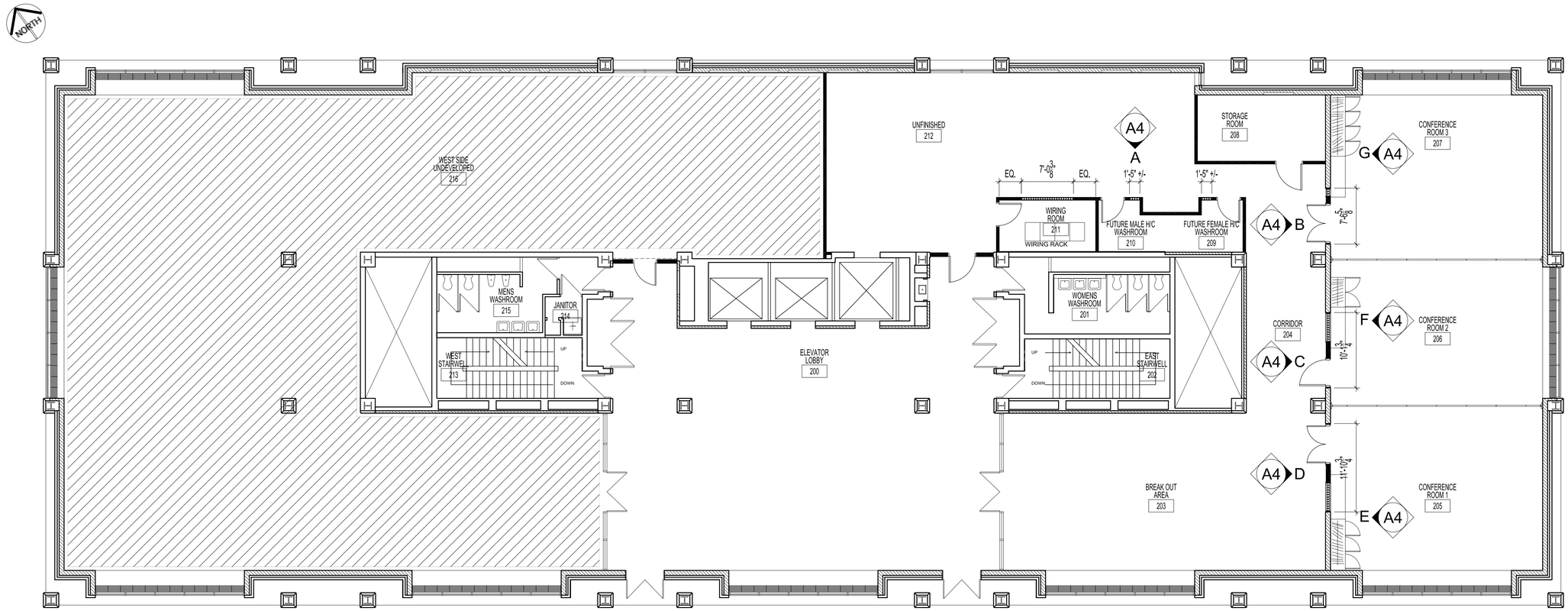

SECOND FLOOR PLAN - MILLWORK

SCALE: 1/8"=1'-0"

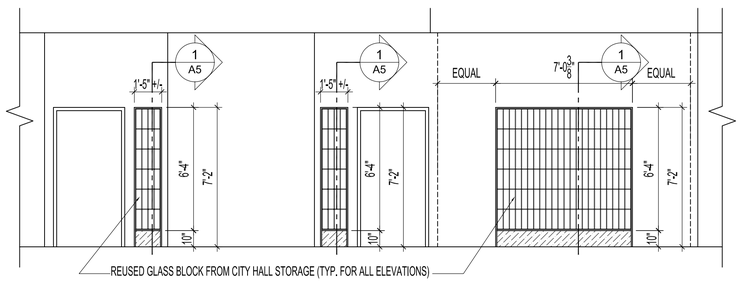

ELEVATION "A"

ALL ELEVATIONS ARE SCALED: 1/4"=1'-0"

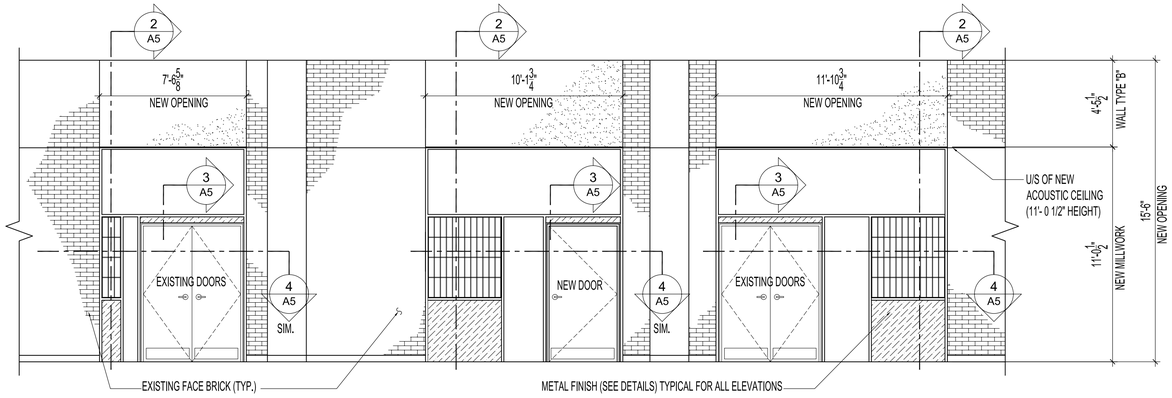

ELEVATION "B"

ELEVATION "C"

ELEVATION "D"

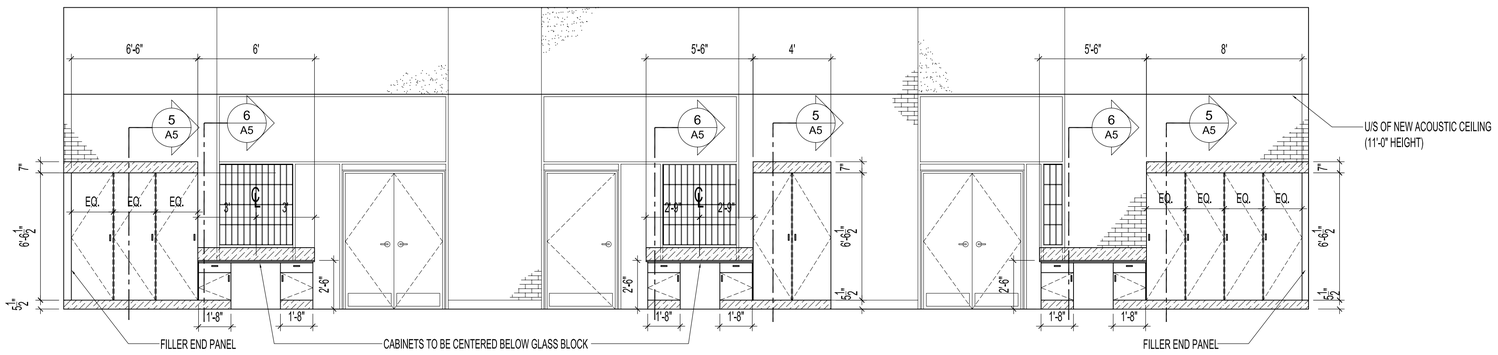

ELEVATION "E"

ELEVATION "F"

ELEVATION "G"

NO.	REVISION/DESCRIPTION	BY	DATE

SEALS

DRAWN BY	MMK	CHECKED BY	APPROVED
DATE	2005.05.24	USER APPROVAL	

Winnipeg

CITY OF WINNIPEG
PLANNING, PROPERTY & DEVELOPMENT DEPARTMENT
CIVIC ACCOMMODATIONS DIVISION
300 – 65 GARRY ST. R3C 4K4

PROJECT

ADMINISTRATION BUILDING
SECOND FLOOR RENOVATIONS
CONFERENCE ROOM RENOVATIONS

510 MAIN STREET

SHEET TITLE

SECOND FLOOR PLAN
MILLWORK & ELEVATIONS

SCALE	PROJECT NO.	SHEET NO.
AS NOTED	2004-180	A4

DRAWING SHEET SIZE: A1 (841mm x 594mm) PLOT 1:1