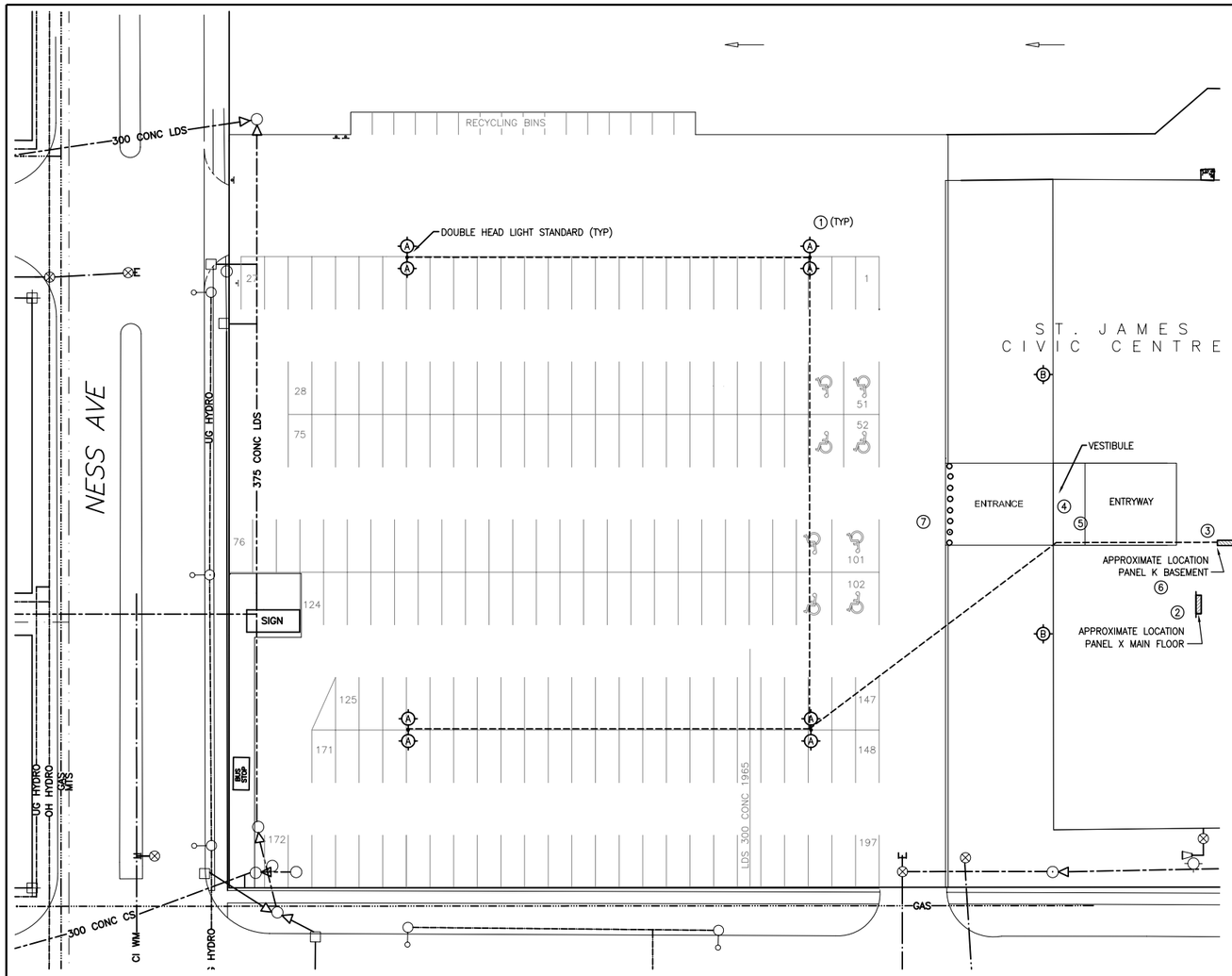

PARKING LOT
ELECTRICAL PLAN
SCALE 1:300

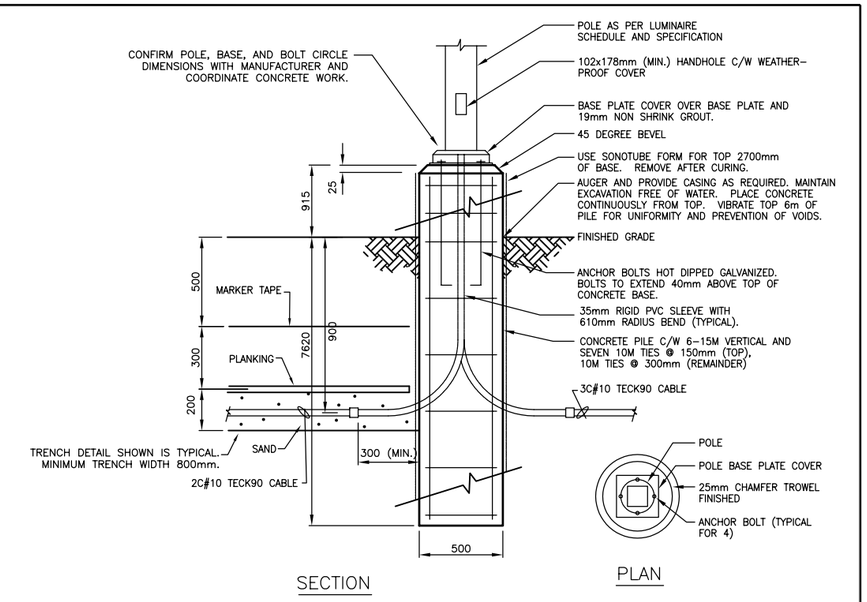

2 LUMINAIRE POLE BASE DETAIL
NTS

NOTES

1. PROVIDE LUMINAIRES, POLES, FOUNDATIONS, MOUNTING HARDWARE, CONDUIT, WIRE, CABLE, BOXES, CIRCUT BREAKERS, CONTACTORS, TRENCHING, SAND, BACKFILL, PLANKING, MARKING TAPE, SURFACE RESTORATION, AND ALL OTHER WORKS REQUIRED TO PROVIDE COMPLETE AND FUNCTIONAL PARKING LOT AND BUILDING MOUNTED LIGHTING. LIGHTING SHALL BE CONTROLLED IN UNISON WITH EXISTING BUILDING MOUNTED EXTERIOR LIGHTING.

2. PROVIDE ONE 15A/1P CIRCUIT BREAKER IN EXISTING AMALGAMATED ELECTRIC PANEL X IN MAIN FLOOR LOST AND FOUND ROOM. PANEL IS RECESSED IN BLOCK WALL. WIRE TO CEILING SPACE IN AC90 IF EMT CONDUIT IS NOT PRACTICABLE. RUN EMT CONDUIT IN CEILING SPACE TO BUILDING ENTRYWAY. RUN EXPOSED EMT CONDUIT THROUGH ENTRYWAY AND PENETRATE ALUMINUM GLAZING FRAME TO CONTINUE TO NEW CONTACTOR IN VESTIBULE. CONTINUE EMT CONDUIT RUNS TO BUILDING EXTERIOR, UP TO ROOFTOP LEVEL, AND ON TO INDICATED LUMINAIRE LOCATIONS. PROVIDE ONE 15A/1P CONTACTOR AT VESTIBULE CEILING. CONNECT VIA EMT TO EXISTING EXTERIOR LIGHTING CIRCUIT FOR CONTROL OF CONTACTOR. WIRE AND CONNECT LUMINAIRES AND CONTACTOR, USE #12AWG RW90 Cu WIRING. LABEL BOXES AND UPDATE PANEL X DIRECTORY. LUMINAIRES SHALL BE MOUNTED APPROXIMATELY TWELVE FEET FROM BUILDING CORNER, FACING DOWNWARD APPROXIMATELY 30 DEGREES OFF OF VERTICAL, AND AWAY FROM THE BUILDING. LUMINAIRE SHALL NOT CAUSE GLARE TO APPROACHING FOOT TRAFFIC OR VEHICLE TRAFFIC PASSING BY. REVIEW MOUNTING OPTIONS, MOUNT WITHOUT PIERCING PREFINISHED METAL WALL IF PRACTICABLE, PROVIDE ALTERNATE MOUNTING BRACKET AND LEVELLING HARDWARE AS REQUIRED. LUMINAIRE AND MOUNTING HARDWARE SHALL BE FINISHED TO REASONABLY MATCH THE BULDING. AFTER AWARD OF CONTRACT REVIEW EXISTING ENTRANCE FLOODLIGHTING CIRCUITS. EXISTING CONDUIT AND/OR CIRCUIT SHALL BE USED IF SUITABLE, COORDINATE WITH ENGINEER. ADVISE ON LAMPING OF EXISTING ENTRANCE FLOODLIGHTS PRIOR TO FLOODLIGHT SHOP DRAWING APPROVAL.

3. PROVIDE TWO 20A/1P CIRCUIT BREAKERS IN EXISTING AMALGAMATED ELECTRIC PANEL K IN BASEMENT MECHANICAL ROOM. PANEL IS SURFACE MOUNTED ON CONCRETE WALL. RUN EMT CONDUIT TO ADJACENT LIGHTING CONTROL EQUIPMENT AND PROVIDE ONE 20A/2P 120/240V CONTACTOR ON WALL. CONTINUE EMT CONDUIT RUN TO CEILING HEIGHT, AND SOUTH THROUGH MECHANICAL ROOM WALL, THROUGH CORRIDOR, THROUGH SERVICE ROOM, AND INTO CRAWLSPACE AREA. WIRE WITH #10AWG RW90 Cu. TRANSITION TO 3C-#10AWG-Cu-TECK90 CABLE ON CRAWLSPACE CEILING NEAR SERVICE ROOM WALL. PENETRATE SOUTH CRAWLSPACE WALL AT BURIED CABLE ELEVATION, WIRE THROUGH TO EXTERIOR, AND SEAL PENETRATION WITH SEAL KIT. CONTINUE TECK CABLE RUN TO INDICATED LUMINAIRE AND FROM THERE TO REMAINING FIXTURES AS SHOWN USING 2C-#10AWG-Cu-TECK90 CABLES. TECK CABLES SHALL BE CONTINUOUS FROM CRAWLSPACE CEILING TO LUMINAIRE AND BETWEEN LUMINAIRES. CONNECT CONTACTORS VIA EMT AND #12AWG RW90 CU TO EXISTING EXTERIOR LIGHTING CIRCUIT FOR CONTROL OF CONTACTOR. LABEL BOXES AND UPDATE PANEL K DIRECTORY. IF TRENCHING UNDER ENTRANCE PAVER STONE AREA IS REQUIRED FOR ACCESS TO CRAWLSPACE, COORDINATE WITH THE RESURFACING WORK OCCURING IN THIS LOCATION.

4. LOCATIONS IN CRAWLSPACE, UNDERGROUND, IN ENTRYWAY AND IN VESTIBULE SHALL BE CONSIDERED CATEGORY 1. PROVIDE CSA 4 ENCLOSURES AND BOXES AND RAINTIGHT FITTINGS AND OTHER SUITABLE MATERIALS AND METHODS.

5. THE ENTRYWAY AND VESTIBULE AND BUILDING EXTERIOR ARE FINISHED LOCATIONS WHERE PORTIONS OF THE WORK SHALL REMAIN EXPOSED AND VISIBLE. PAINT CONDUIT AND HARDWARE PRIOR TO INSTALLATION TO MATCH SURFACES. INSTALL CONDUIT IN A FASHION MIMICKING THE EXISTING CONDUIT RUNS FOR A CONSISTENT, CLEAN, AND NEAT APPEARANCE.

6. FIRESTOP ALL PENETRATIONS THROUGH INTERIOR BASEMENT WALLS AND OTHER SURFACES AS SPECIFIED. SEAL PENETRATIONS THROUGH VESTIBULE GLAZING FRAME.

7. THE BUILDING SHALL MAINTAIN NORMAL OPERATING HOURS DURING THE COURSE OF THE WORK. WORK MAY GENERALLY BE CARRIED OUT DURING REGULAR HOURS. CARRY OUT WORK SUCH THAT NO FACILITY USERS OR PERSONNEL WILL BE SUBJECTED TO UNREASONABLE OR PROLONGED MESS, NOISE, OR LOSS OF USE OF SYSTEMS. DO NOT LEAVE ANY WORK IN AN UNSAFE STATE.

FIXTURE SCHEDULE

TYPE	DESCRIPTION	LAMP	VOLTAGE	LENS	SYMBOL	MANUFACTURER
A	DOUBLE HEAD POLE MOUNTED LUMINAIRE C/W MOUNTING HARDWARE, POLE WITH ANCHOR BOLTS AND TEMPLATE, DRILLED FOR TWO FIXTURES 180ø. MOUNTING HEIGHT 35'.	2-400W MH P.S.	120V	GLASS	A A	AMERICAN ELECTRIC LIGHTING AVL 40M SCWA 120 R4 FG / WEST COAST ENGINEERING MTS 35 BZP
B	PARAPET MOUNTED FLOODLIGHT LUMINAIRE C/W HARDWARE FOR PARAPET MOUNTING. ALLLOW FOR FINISH TO MATCH BUILDING FACADE.	1-250W MH P.S.	120V	GLASS	B	LITHONIA TFR 250M 120 SCWA FRWB TFRFV

0m 10 20m

METRIC
WHOLE NUMBERS INDICATE MILLIMETRES
DECIMALIZED NUMBERS INDICATE METRES

APEGM
Certificate of Authorization
Cochrane Engineering Ltd.
No. 227 Expiry: April 30, 2006

EXISTING	LEGEND – PLAN	NEW	EXISTING	LEGEND – PLAN	NEW	EXISTING	LEGEND – PROFILE	NEW
150 mm WM	WATERMAIN	150 mm WM		HYDRO		150 mm WM	WATERMAIN	
	HYDRANT			MTS			HYDRANT	
	VALVE			CONCRETE		X	VALVE	X
300 mm LDS	LAND DRAINAGE SEWER	300 mm LDS		LIMIT OF ASPHALT		300 mm LDS	SEWER	300 mm LDS
250 mm CS	COMBINED SEWER	250 mm CS		CURB RENEWAL				
	MANHOLE			ASPHALT				
	CATCH BASIN (CB)		231.000	ELEVATIONS	31.000		SOUTH/EAST PL	
	CURB INLET (CP)			PROPERTY LINE			NORTH/WEST PL	
	SIGN			SURVEY BAR			℄ PROFILE	
	LAMP STANDARD			CURB STOP			SOUTH/EAST GUTTER	
	GAS			RAMP CURB			NORTH/WEST GUTTER	

LOCATION APPROVED
UNDERGROUND STRUCTURES

SUPR, U/G STRUCTURES COMMITTEE DATE

NOTE:
LOCATION OF UNDERGROUND STRUCTURES AS SHOWN ARE BASED ON THE BEST INFORMATION AVAILABLE, BUT NO GUARANTEE IS GIVEN THAT ALL EXISTING UTILITIES ARE SHOWN OR THAT THE GIVEN LOCATIONS ARE EXACT. CONFIRMATION OF EXISTENCE AND EXACT LOCATION OF ALL SERVICES MUST BE OBTAINED FROM THE INDIVIDUAL UTILITIES BEFORE PROCEEDING WITH CONSTRUCTION.

B.M.
ELEV.

NO.	REVISIONS	DATE	BY

COCHRANE ENGINEERING
COCHRANE ENGINEERING LTD.
#600 – 5 DONALD STREET
WINNIPEG, MANITOBA, R3L 2T4
TEL: (204) 477-6650
FAX: (204) 474-2664
ENGINEERS • PLANNERS • SCIENTISTS • PROJECT MANAGERS
VANCOUVER, CALGARY, EDMONTON, REGINA, SASKATOON, WINNIPEG, BURLINGTON, TORONTO

DESIGNED BY DR
CHECKED BY DTB
DRAWN BY SR
APPROVED BY DR
HOR. SCALE: AS NOTED
DATE AUGUST 12, 2005

ENGINEER'S SEAL
PROVINCE OF MANITOBA
D. L. ROBINSON
Member
22543
REGISTERED PROFESSIONAL ENGINEER

CONSULTANT DRAWING NO.
05047E01

Winnipeg
THE CITY OF WINNIPEG
PUBLIC WORKS DEPARTMENT

PARKING LOT ELECTRICAL PLAN

CITY DRAWING NUMBER
485-2005-E01
SHEET 6 OF 6
REV.
6 0