SHEET: COW-A1 (05/2005)

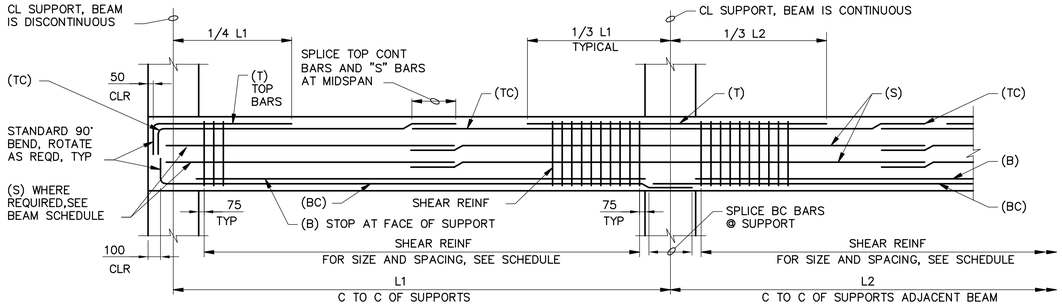

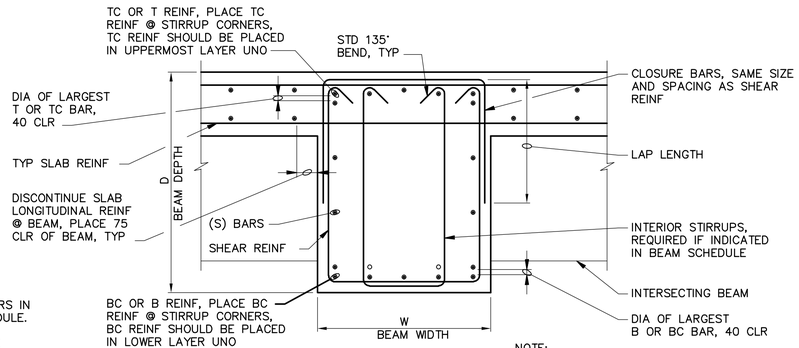

TYPICAL SECTION

NOTE:
PROVIDE MINIMUM 1 – 15M CONTINUOUS AT EACH CORNER OF STIRRUPS.

NOTES:

1. PLACE TOP (T & TC) AND BOTTOM (B & BC) BARS IN MULTIPLE ROWS ONLY WHERE INDICATED IN SCHEDULE.
2. WHEN INDICATED IN BEAM SCHEDULE, SUBSTITUTE CLOSED TIES ( ) FOR STIRRUPS AND CLOSURE BARS SHOWN ( ).

BEAM REINFORCING

BEAM NO. (SEE PLANS)	SIZE		TOP REINF AT LEFT SUPPORT		BOTTOM REINF		* TOP REINF AT RIGHT SUPPORT		S BARS	SHEAR REINF (MM)		REMARKS
	W	D	T	TC	B	BC	T	TC		NO. SIZE	SPACING FROM LEFT SUPPORT	
MBI	–	–	–	–	–	–	–	–	–	–	–	NOT USED
MB2	600	1150	6–25M	6–25M	–	6–25M	6–25M	6–25M	2–20M	10M	200	
MB3	600	1150	6–25M	6–25M	–	6–25M	6–25M	6–25M	2–20M	10M	200	
MB4	600	1150	–	6–25M	–	6–25M	–	6–25M	2–20M	10M	200	
MB5	600	1150	–	6–25M	–	6–25M	–	6–25M	2–20M	10M	200	
MB6	883	1150	–	6–25M	–	6–25M	–	6–25M	2–20M	10M	200	
MB7	600	1150	–	6–25M	–	6–25M	–	6–25M	2–20M	10M	200	
MB8	400	500	2–25M	2–25M	–	2–25M	2–25M	2–25M	–	10M	300	
B1	400	950	–	4–25M	–	4–25M	–	4–25M	2–20M	10M	200	
B2	400	950	–	6–25M	–	4–25M	–	6–25M	2–20M	10M	200	
B3	400	950	–	4–25M	–	4–25M	–	4–25M	2–20M	10M	200	
B4	400	950	–	4–25M	–	4–25M	–	4–25M	2–20M	10M	200	
B5	400	950	–	4–25M	–	4–25M	–	4–25M	2–20M	10M	200	
B6	600	1150	10–30M	4–30M	–	8–30M	10–30M	4–30M	2–20M	2–10M	200	
B7	600	1150	10–30M	4–30M	–	8–30M	10–30M	4–30M	2–20M	2–10M	200	PLACE "T" AND "BC" BARS IN LAYERS TO AVOID CONGESTION
B8	600	1150	12–30M	4–30M	–	8–30M	12–30M	4–30M	2–20M	2–10M	200	
B9	600	1150	12–30M	4–30M	–	8–30M	12–30M	4–30M	2–20M	2–10M	200	
B10	400	950	–	4–25M	–	4–25M	–	4–25M	2–20M	10M	200	200W x 600H UPSTAND
B11	400	950	–	4–25M	–	4–25M	–	4–25M	2–20M	10M	200	
B12	400	950	–	4–25M	–	4–25M	–	4–25M	2–20M	10M	200	200W x 600H UPSTAND
B13	400	950	–	4–25M	–	4–25M	–	4–25M	2–20M	10M	200	200W x 600H UPSTAND

BEAM SCHEDULE

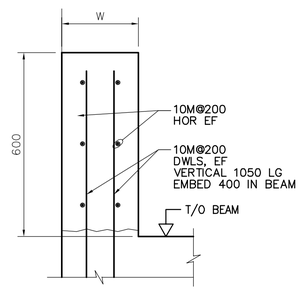

TYPICAL UPSTAND REINFORCING

NOTES:

1. * TOP REINFORCING MAY BE CALLED–OUT TWICE IN SCHEDULE. (I.E. "TOP REINFORCING AT RIGHT SUPPORT" OF BEAM THAT IS CONTINUOUS OVER THE RIGHT SUPPORT IS CALLED–OUT AS "TOP REINFORCING AT LEFT SUPPORT" OF ADJACENT BEAM.)
2. LEFT SUPPORT IS DESIGNATED AS THE SUPPORT CLOSEST TO THE LEFT SIDE OR BOTTOM OF SHEET ON WHICH FRAMING PLAN IS DRAWN, UNLESS NOTED OTHERWISE ON PLAN.
3. FOR CONCRETE BEAM END DETAIL , SEE 3 / WB–S0451 TYP. UNO

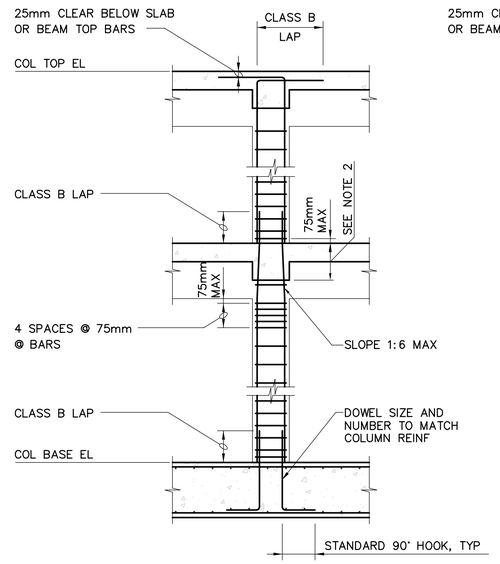

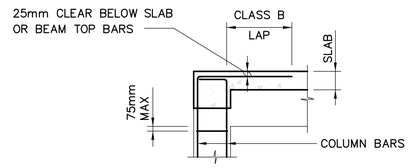

NON–CONTINUOUS END

NOTE:

1. FOR DIMENSIONS AND REINFORCEMENT SEE COLUMN SCHEDULE.
2. CONTINUE TIES AT SPACING NOTED THROUGH BEAM CONNECTION ZONE WHERE CONCRETE BEAMS DO NOT FRAME INTO COLUMN ON ALL FOUR SIDES

COLUMN REINFORCING

N.T.S.

COLUMN TYPE		SIZE	VERTICAL REINF.	TIES	REMARKS
	C1	400x400	8–20M	2–10M @ 200	18 RQD
	C2	600x300	8–20M	2–10M @ 200	1 RQD
	C3	400x400	4–25M	10M @ 300	1 RQD

COLUMN SCHEDULE

3 – DETAIL
N.T.S.

APEGM
Certificate of Authorization
CH2M HILL Canada Ltd.
No. 1441 Expiry: April 30, 2006

B.M. ELEV.

NO.	REVISIONS	DATE	BY
00	ISSUED FOR TENDER	2006/02/03	KA

CH2MHILL
Frederickson Cooper ARCHITECTS
EarthTech A Tyco International Ltd. Company

DESIGNED BY	KA	CHECKED BY	AP
DRAWN BY	IV	APPROVED BY	DJT
SCALE:	NTS	RELEASED FOR CONSTRUCTION BY:	R. SOROKOWSKI
DATE	2005/08/10	DATE	2006/02/08

ENGINEER'S SEAL
ORIGINAL SIGNED BY
D. KRUGER
2006/02/06

CONSULTANT DRAWING NO.
WM–S0515

Winnipeg
THE CITY OF WINNIPEG
WATER AND WASTE DEPARTMENT
ENGINEERING DIVISION

WATER TREATMENT PLANT
GENERAL PLANT SERVICES/MISCELLANEOUS
FOUNDATIONS AND CONCRETE STRUCTURES

STRUCTURAL
ELECTRICAL ROOM
COLUMN AND BEAM SCHEDULES

CITY FILE NUMBER
SHEET OF
CITY DRAWING NUMBER
1-0601M-D-S0515-001-00D

Last Save: 2006–02–01 8:36 PM

C:\DOCUMENTS AND SETTINGS\SEVERITT\MY DOCUMENTS\NDMPROJ\321352 – WINNIPEGWTP\DN_WM–S0515_CH2M.DWG