SHEET: COW-A1 (05/2005)

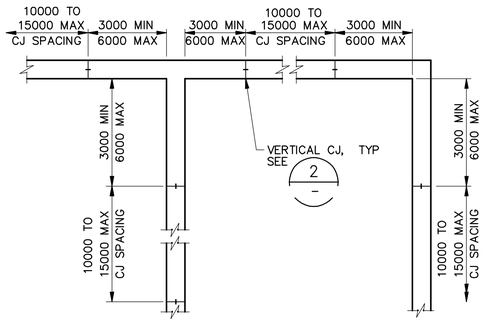

PLAN

NOTES:

1. COORDINATE CJ LOCATIONS AND TIME BETWEEN CONCRETE POURS WITH SPECIFICATION 3300.
2. LOCATE WALL CJS AS SHOWN, UNLESS INDICATED OTHERWISE.
3. THE EXACT SPACING OF CJS VARIES FROM 10 000 TO 15 000 , BASED ON APPLICATION. SEE SPECIFICATION.

1 - WALL CONSTRUCTION JOINT SPACING

N.T.S.

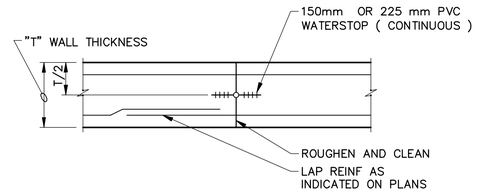

PLAN

NOTES:

1. ALL REINFORCING CONTINUOUS ACROSS JOINT.
2. FOR LOCATIONS, SEE 1 -
3. FOR SIZE/ PROPERTIES OF WATERSTOPS, SEE 1 WB-S0456

2 - WALL VERTICAL CONSTRUCTION JOINT

N.T.S.

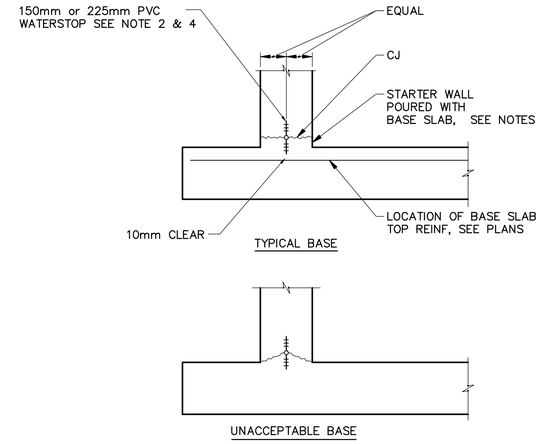

NOTES:

1. STARTER WALL REQUIRED FOR ALL CJS WITH WATERSTOPS, UNLESS SPECIFICALLY INDICATED OTHERWISE.
2. FOR WALLS W/SINGLE MAT OF REINFORCING LOCATE WATERSTOP ON LIQUID FACE, 25mm CLEAR OF REINFORCING.
3. SECURE WATERSTOP IN-PLACE AS SPECIFIED.
4. FOR SIZE/ PROPERTIES OF WATERSTOPS, SEE DETAIL 1 WB-S0456
5. HEIGHT OF STARTER WALL TO PROVIDE 10mm CLEARENCE BETWEEN U/S OF WS & TOP OF REBAR.

3 - WALL BASE CONSTRUCTION JOINT

N.T.S.

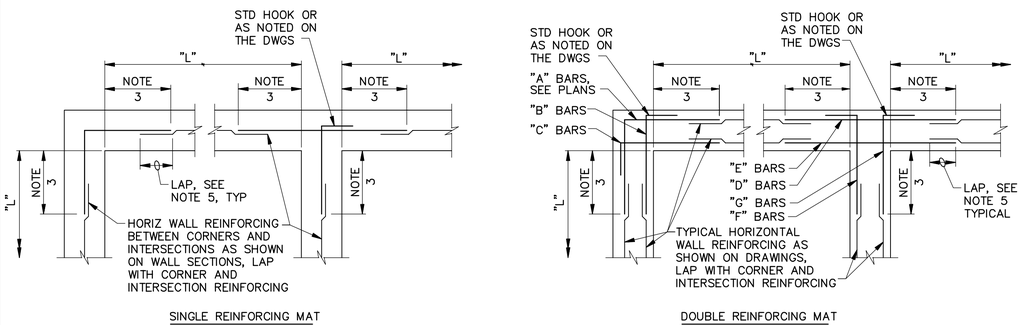

NOTES:

1. TYPICAL HORIZONTAL WALL CORNER AND INTERSECTION REINFORCING LAYOUT IS SHOWN TO AVOID CONGESTION AND PERMIT PROPER PLACEMENT, FOR SIZE AND SPACING SEE PLANS. ALL HORIZONTAL REINFORCING AT CORNERS AND INTERSECTIONS SHALL BE FABRICATED AND INSTALLED WITH SPLICES LOCATED WHERE SHOWN REGARDLESS OF BAR SIZE AND SPACING.
2. WHERE THE CORNER OR INTERSECTION REINFORCING SIZE AND SPACING IS NOT SHOWN, NOTED OR TABULATED ON THE PLANS, THE SIZE AND SPACING SHALL BE THE SAME AS THE WALL HORIZONTAL REINFORCING SHOWN ON THE WALL SECTIONS OR AS NOTED FOR THE REINFORCING BETWEEN THE CORNERS OR INTERSECTIONS.
3. EXCEPT WHERE OTHERWISE SHOWN ON THE DRAWINGS, THE LENGTH INDICATED AS "NOTE 3" SHALL BE THE LESSER OF L/4, 3000mm, OR 1.0 TIMES THE HEIGHT OF THE WALL, EXCEPT THAT IN NO CASE SHALL IT BE LESS THAN 600mm.
4. L = LENGTH OF WALL PARALLEL TO THE BAR LENGTH IN QUESTION.
5. EXCEPT WHERE OTHERWISE SHOWN ON THE DRAWINGS, THE LENGTH INDICATED AS "NOTE 5" SHALL BE EQUAL TO ONE "LAP LENGTH" AS REQUIRED BY THE GENERAL STRUCTURAL NOTES. USE THE LAP LENGTH AS REQUIRED FOR THE SMALLER OF THE TWO REINFORCING BARS BEING SPLICED.
6. UNLESS OTHERWISE NOTED, "B" AND "C" BARS ARE THE SAME SIZE AND SPACING AND, "F" AND "G" BARS ARE THE SAME SIZE AND SPACING.

4 - TYPICAL WALL CORNER AND INTERSECTION REINFORCING

N.T.S.

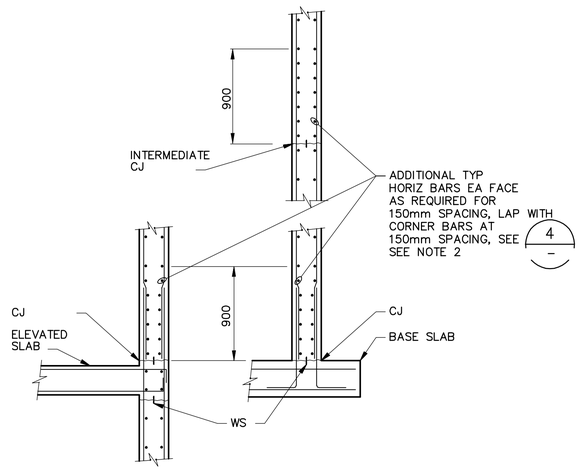

NOTES:

1. PROVIDE ADDITIONAL HORIZONTAL BARS AS SHOWN IN THE FIRST 900mm ABOVE ALL HORIZONTAL WALL CJS IN HYDRAULIC AND BELOW-GRADE STRUCTURES.
2. PROVIDE ADDITIONAL HORIZONTAL CORNER BARS EA. FACE AS REQUIRED FOR 150mm SPACING TO LAP WITH THE ADDITIONAL TYPICAL HORIZONTAL BARS SHOWN.

5 - ADDITIONAL REINFORCING AT HORIZ CONSTRUCTION JOINT

N.T.S.

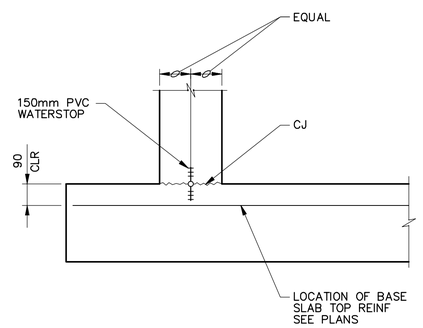

NOTES:

1. FOR WALLS WITH SINGLE MAT OF REINFORCING LOCATE WATERSTOP ON LIQUID FACE, 25mm CLEAR OF REINFORCEMENT.
2. SECURE WATERSTOP IN-PLACE AS SPECIFIED.
3. USE THIS DETAIL ONLY WHERE NOTED. USE 3 - UNLESS NOTED OTHERWISE.

6 - WALL BASE CONSTRUCTION JOINT

N.T.S.

APEGM
Certificate of Authorization
CH2M HILL Canada Ltd.
No. 1441 Expiry: April 30, 2006

B.M.
ELEV.

NO.	REVISIONS	DATE	BY
00	ISSUED FOR TENDER	2006/02/03	DK

CH2MHILL
Frederickson Cooper ARCHITECTS
EarthTech A Tyco International Ltd. Company

DESIGNED BY	DK	CHECKED BY	AP
DRAWN BY	PT	APPROVED BY	DJT
SCALE:	NTS	RELEASED FOR CONSTRUCTION BY:	R. SOROKOWSKI
DATE	2005/08/31	DATE	2006/02/08

ENGINEER'S SEAL
ORIGINAL SIGNED BY
D. KRUGER
2006/02/06

CONSULTANT DRAWING NO.
WB-S0452

Winnipeg
THE CITY OF WINNIPEG
WATER AND WASTE DEPARTMENT
ENGINEERING DIVISION

WATER TREATMENT PLANT
FOUNDATIONS AND CONCRETE STRUCTURES
STRUCTURAL
STANDARD DETAILS

CITY FILE NUMBER
SHEET OF
CITY DRAWING NUMBER
1-0601B-A-S0452-001-00D

Last Save: 2006-02-02 6:10 PM

C:\DOCUMENTS AND SETTINGS\SEVERITT\MY DOCUMENTS\NDMPROJ\321352 - WINNIPEGWTP\DN_WB-S0452_CH2M.DWG