SHEET: COW-A1 (05/2005)

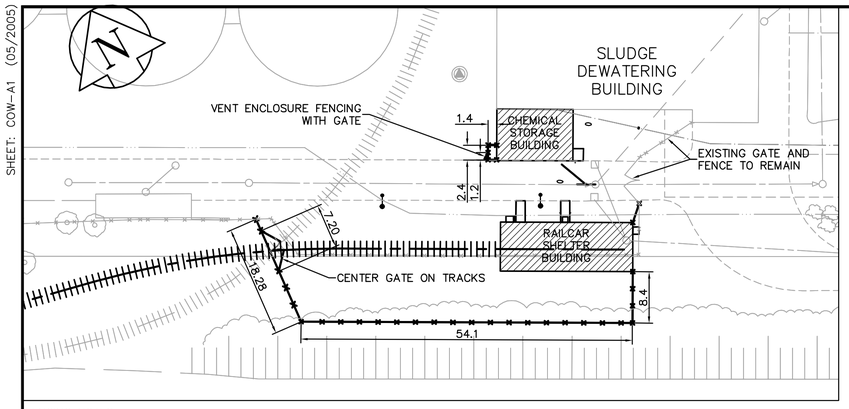

FENCING NOTES:
1. CONSTRUCT FENCING IN ACCORDANCE WITH CW3550-R2.
2. SALVAGE FENCE FABRIC, GATES, AND GATE HARDWARE FOR REUSE. SUPPLY ADDITIONAL FENCE FABRIC AS REQUIRE TO COMPLETE INSTALLATION.
3. FENCING SHALL BE 2440mm HIGH WITH TOP AND BOTTOM RAILS AND 3 STRAND BARBED WIRE ON ANGLED BRACKETS FACING OUTSIDE PROPERTY EXCEPT AS NOTED.
4. POSTS SHALL BE SET IN CONCRETE.
5. SUPPLY HORIZONTAL BRACES AT ALL TERMINAL AND CORNER POSTS.
6. VENT ENCLOSURE FENCING SHALL BE 1.2m HIGH WITH POSTS SET ON BRACKETS BOLTED TO CONCRETE SLAB.

FENCING PLAN
SCALE 1:500

0 10m 20m
SCALE

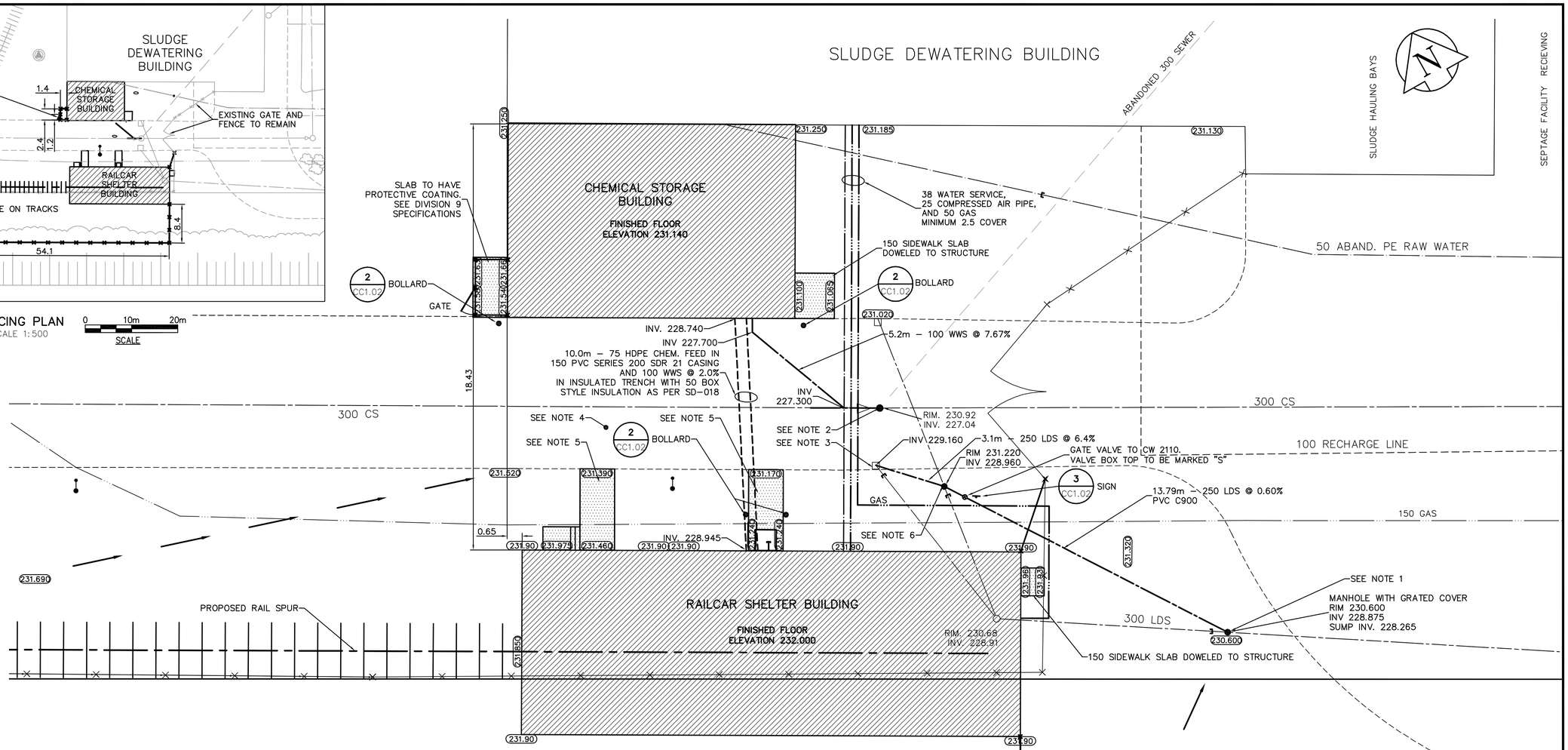

UTILITIES PLAN
SCALE 1:100

0 2m 4m
SCALE

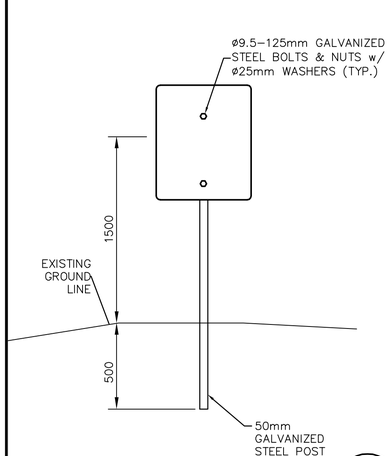

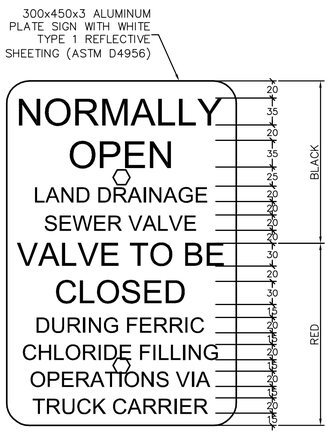

NOTE: ALL LETTERING TO BE HELVETICA.

3 / CC1.02 SIGN
SCALE NTS

GENERAL NOTES:
A. ALL WORK AND MATERIALS SHALL CONFORM TO THE CITY OF WINNIPEG STANDARD CONSTRUCTION SPECIFICATIONS.
B. LOCATION OF UTILITIES SHOWN ON DRAWINGS ARE APPROXIMATE. THE CONTRACTOR SHALL FIELD LOCATE ALL UTILITIES PRIOR TO CONSTRUCTION.
C. ALL TRENCHES UNDER OR WITHIN 1.0M OF EXISTING OR PROPOSED PAVEMENTS, STRUCTURES OR RAIL TRACKS SHALL BE BACKFILLED WITH CLASS 2 BACKFILL. ALL OTHER TRENCH BACKFILL SHALL BE CLASS 4.
D. ALL SEWER AND WATER PIPING TO HAVE NITRILE GASKETS.
E. ALL DISTURBED LANDSCAPED AREAS ARE TO BE RESTORED WITH TOPSOIL AND SOD.
F. REGRADE AROUND RAILCAR SHELTER FROM 100mm BELOW FINISHED FLOOR GRADE TO EXISTING GROUND ELEVATION AT MINIMUM 5:1 SLOPE.

UTILITY CONSTRUCTION NOTES:
1. INSTALL NEW MANHOLE ON EXISTING LAND DRAINAGE SEWER. ABANDON EXISTING LAND DRAINAGE SEWER WEST OF NEW MANHOLE.
2. REMOVE EXISTING MANHOLE AND INSTALL NEW MANHOLE. RENEW EXISTING SEWER 3.0m WEST OF NEW MANHOLE (SD 022A).
3. REPLACE EXISTING MOUNTABLE CURB AND GUTTER INLET FRAME AND COVERS WITH NEW BARRIER CURB INLET FRAME. DELIVER SALVAGED FRAMES AND COVERS TO WATER SERVICES DIVISION YARD, 552 PLINGUET STREET.
4. RECONSTRUCT ALL REMOVED PAVEMENT AS SHOWN ON DETAIL 1–CC1.02.
5. CONSTRUCT 1.5m WIDE SIDEWALK.
6. CONNECT EXISTING CB LEAD TO NEW MANHOLE. ABANDON CB LEAD SOUTH OF NEW MANHOLE
7. GRADE, TOPSOIL AND SOD BOULEVARD AREAS TO ELEVATIONS SHOWN.
8. RESTORE ALL OTHER BOULEVARD AREAS TO A CONDITION EQUAL TO OR BETTER ORIGINAL CONDITION.

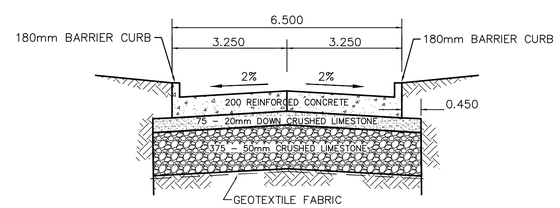

1 / CC1.02 PAVEMENT CROSS–SECTION
SCALE NTS

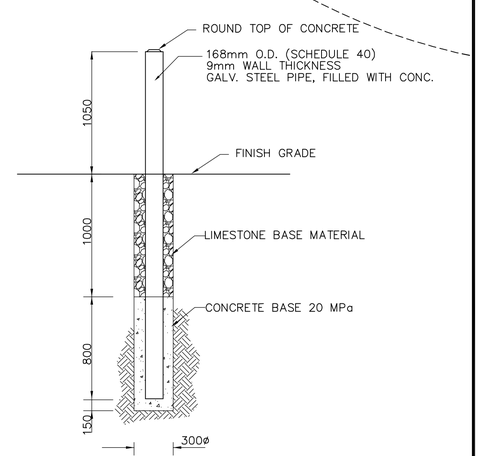

2 / CC1.02 BOLLARD
SCALE NTS

150 mm W.M.	WATERMAIN	150 mm W.M.		HYDRO			LIGHT STANDARD	
	HYDRANT			M.T.S.			ANCHOR	
	VALVE			CONCRETE		H	POLE	
300mm L.D.S.	LAND DRAINAGE SEWER	300mm L.D.S.		ASPHALT		391.0	CONTOURS	
250mm W.W.S.	WASTEWATER SEWER	250mm W.W.S.		PROPERTY LINE			RAIL X-ING SIGNAL	
	MANHOLE			SURVEY BAR			℄ RAILWAY TRACK	
	CATCH BASIN		232.750	ELEVATION	32.750		DITCH	
	CURB INLET		500ø	TREE			SWALE	
	JUNCTIONS			ANODE			COMPRESSED AIR	
	CULVERT			CONCRETE SIDEWALK				
	GAS			FENCE				
EXISTING	LEGEND – PLAN	PROPOSED	EXISTING	LEGEND – PLAN	PROPOSED	EXISTING	LEGEND – PLAN	PROPOSED

APEGM
Certificate of Authorization
Earth Tech Canada Inc.
No. 730 Expiry: April 30, 2006

B.M. ELEV 13-027 W. side Main St. on the grounds of the North End Treatment Plant, Tblt. on top of Conc. pit in front of main bldg., 22.3m E. of line of most Ely. wall & 32.8m S. of most Nly. wall of main bldg. (ties to tblt.) ELEV.= 231.261m

NO.	REVISIONS	DATE	BY
00	ISSUED FOR TENDER	05/12/2	GSK

EarthTech
A Tyco International Ltd. Company

DESIGNED BY	GSK	CHECKED BY	JEH
DRAWN BY	MAF	APPROVED BY	D. TANIGUCHI
SCALE:	AS NOTED	RELEASED FOR CONSTRUCTION BY:	K. MARTENS
DATE	2005/10/12	DATE	05/12/02

ENGINEER'S SEAL
ORIGINAL SIGNED BY
J.E. HUTCHISON
2005/12/02

CONSULTANT DRAWING NO.
CC1.02

Winnipeg
THE CITY OF WINNIPEG
WATER AND WASTE DEPARTMENT
ENGINEERING DIVISION

NEWPCC CENTRATE NUTRIENT TREATMENT PHOSPHORUS REMOVAL FACILITY CONTRACT No. 1

CIVIL
SITE UTILITIES AND DETAILS

CITY FILE NUMBER
SHEET OF
CITY DRAWING NUMBER
1-0101F-D-C0002-001-00-D

L:\WORK\66000\66303CEN\02A–CAD\MUN\CONTR\CC1.02.DWG