KU-42-664

GENERAL NOTES:

1. DRAWING NOTES ARE PROVIDED ON DRAWING M01.

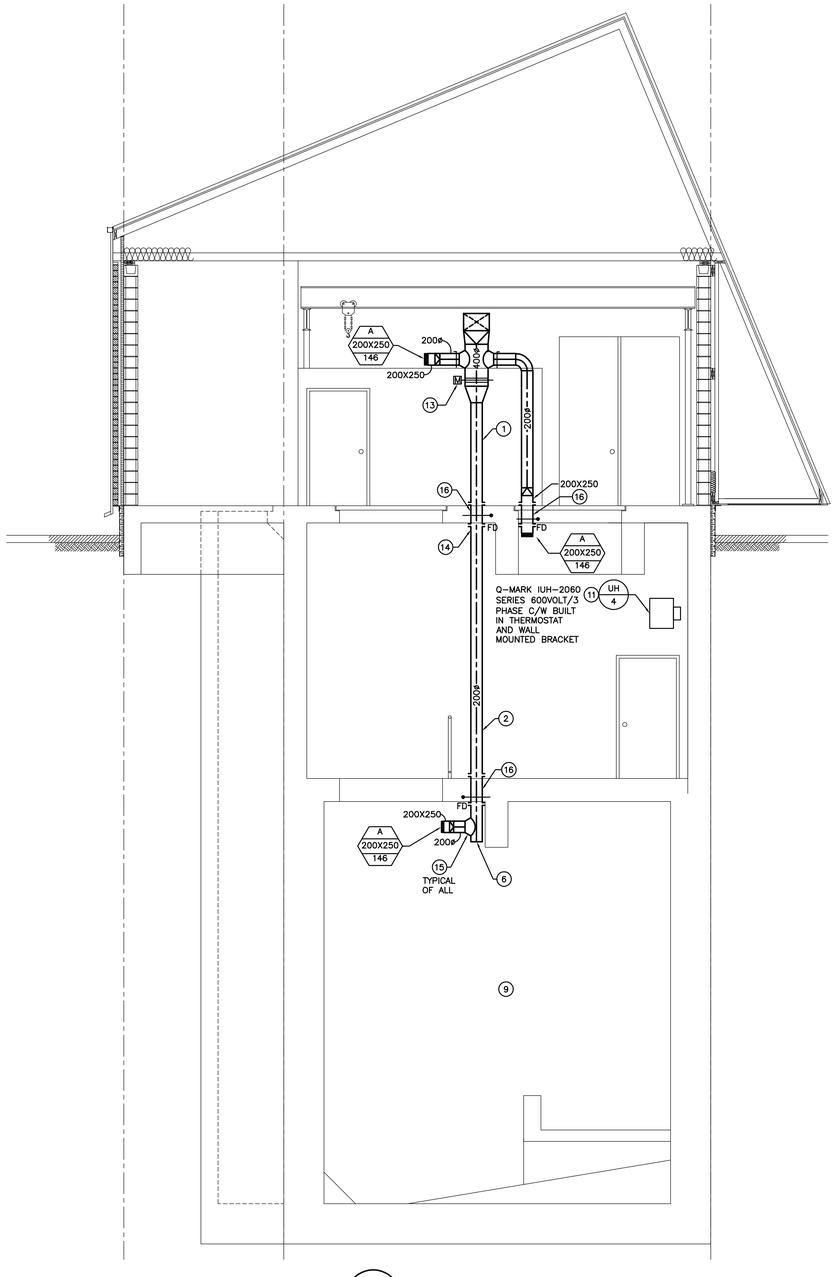

A — SUPPLY AIR SECTION
M01 M02 N.T.S.

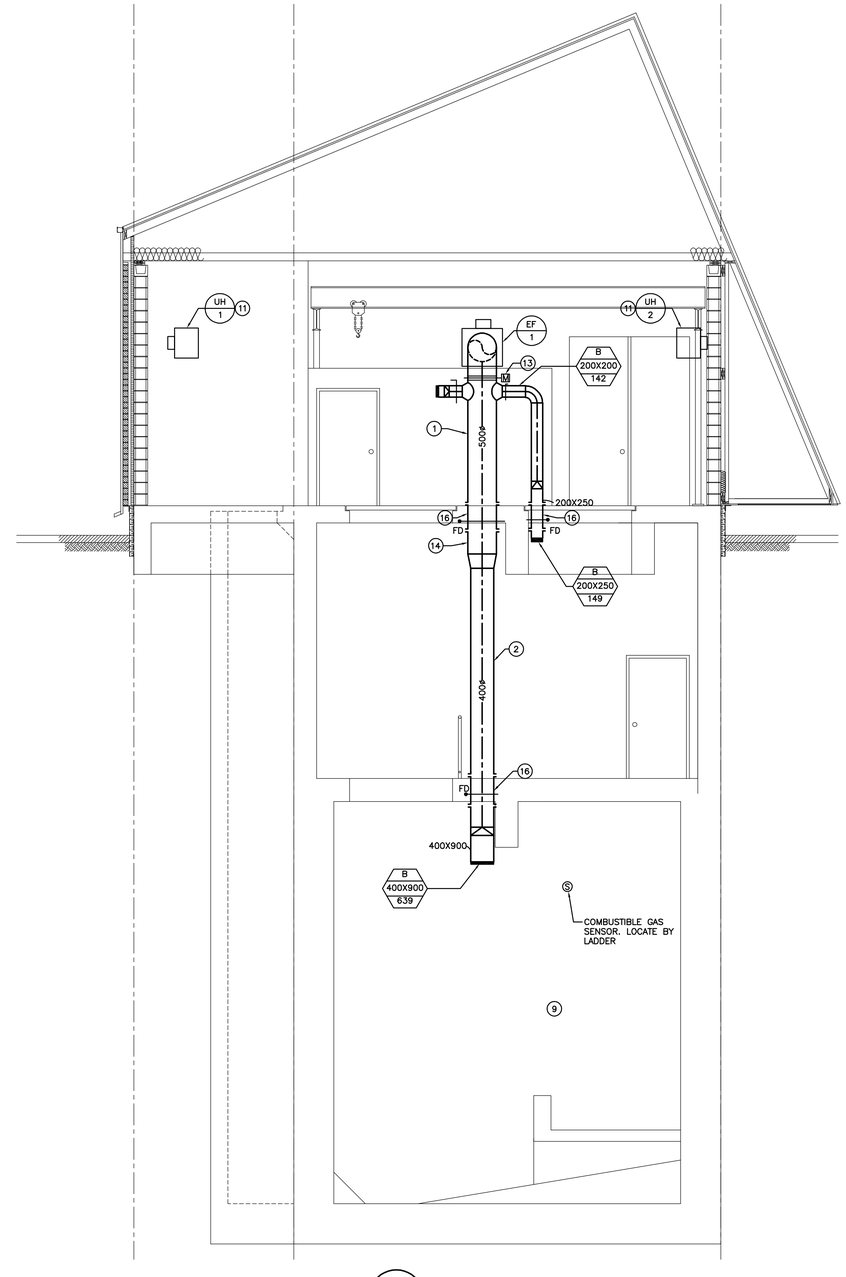

B — EXHAUST FAN SECTION
M01 M02 N.T.S.

APEGM
Certificate of Authorization
MCW/AGE Consulting
Professional Engineers
No. 589 Expiry: April 30, 2006

LOCATION APPROVED
UNDERGROUND STRUCTURES

SUPV. U/G STRUCTURES COMMITTEE — DATE

NOTE:
LOCATION OF UNDERGROUND STRUCTURES AS SHOWN ARE BASED ON THE BEST INFORMATION AVAILABLE BUT NO GUARANTEE IS GIVEN THAT ALL EXISTING UTILITIES ARE SHOWN OR THAT THE GIVEN LOCATIONS ARE EXACT. CONFIRMATION OF EXISTENCE AND EXACT LOCATION OF ALL SERVICES MUST BE OBTAINED FROM THE INDIVIDUAL UTILITIES BEFORE PROCEEDING WITH CONSTRUCTION.

B.M.
ELEV.

NO.	REVISIONS	DATE	BY
2	ISSUED FOR TENDER	12/09/05	SR
1	ISSUED FOR 99% REVIEW	11/22/05	SR
0	ISSUED FOR CLIENT REVIEW	XX.XX.XX	SB

MCW / AGE
Consulting Professional Engineers
210-1521 Wellington Avenue
Winnipeg, Manitoba R3H 0G4
Phone - (204) 779-7900 Fax - (204) 779-1119
E-Mail: mcw_wpg@mcw.com
5359

DESIGNED BY	CAM D.	CHECKED BY	CAM D.
DRAWN BY	R.K.	APPROVED BY	S.R.
HOR. SCALE: VERTICAL:	AS SHOWN	AUTHORIZED BY: R. FINGAS, P. ENG. BRIDGE PROJECTS ENGINEER	DATE 05.12.09
DATE	05/12/12		

ENGINEER'S SEAL
ORIGINAL
SEALED BY
G.S. REABURN
P. ENG.
05.12.09

CONSULTANT DRAWING NO.
II3703042-M02

THE CITY OF WINNIPEG
PROCESSING PLAN AND SECTIONS
ENGINEERING DIVISION

KENASTON UNDERPASS
KENASTON UNDERPASS PUMPING STATION

MECHANICAL SECTIONS

SHEET 21 OF 25
CAD FILE DRAWING NUMBER II3703042-M02
CITY DRAWING NUMBER P-3258-165

V:\1137\active\113703042 - Kenaston UP DESIGN\ACAD\CONTRACT 5 -Pumphouse\HVAC\113703042-M01.dwg
2005-12-12 11:40AM By: bmcnabb