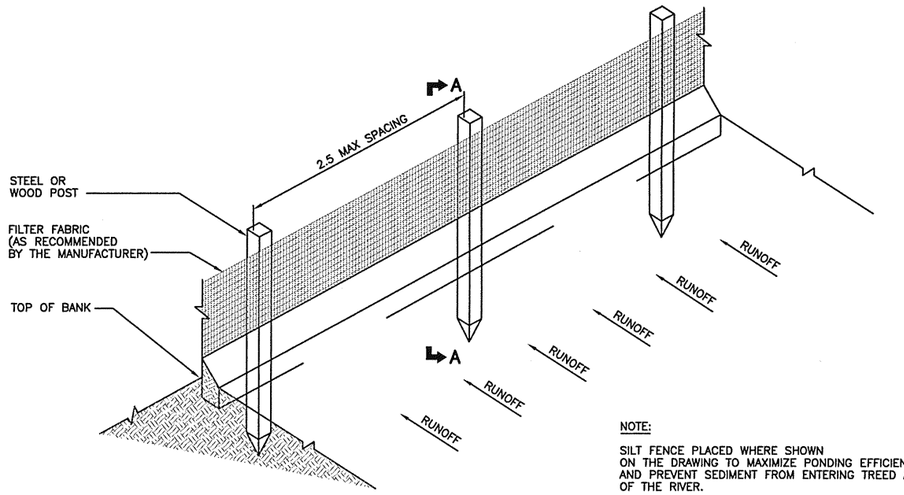

NOTE:

SILT FENCE PLACED WHERE SHOWN ON THE DRAWING TO MAXIMIZE PONDING EFFICIENCY, AND PREVENT SEDIMENT FROM ENTERING TREED AREAS OF THE RIVER.

ISOMETRIC DETAIL

SCALE: NTS

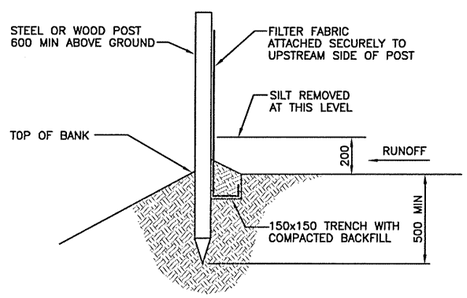

SECTION A–A

TRENCH WITH NATIVE BACKFILL
SCALE: NTS

SILT FENCE DETAILS

SCALE: NTS

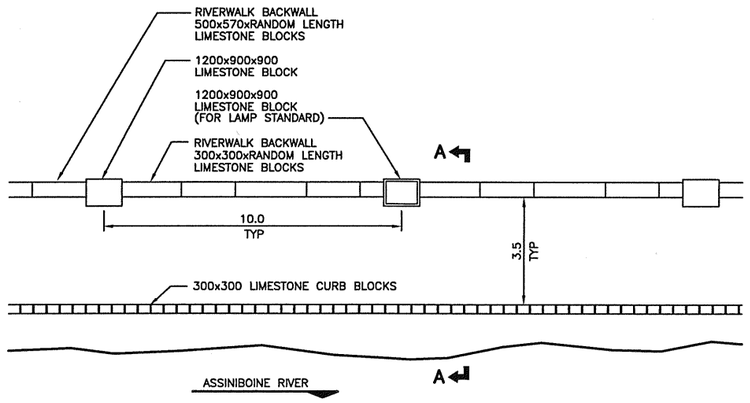

RIVER WALK PLAN

SCALE: 1:100

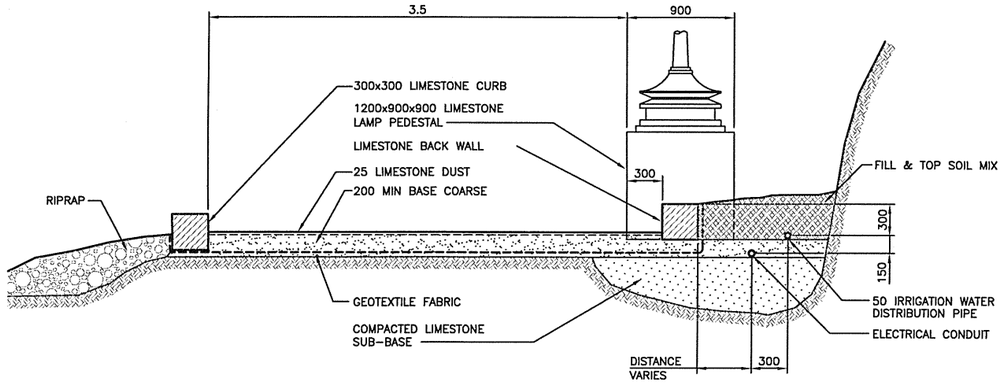

SECTION A–A

SCALE: 1:25

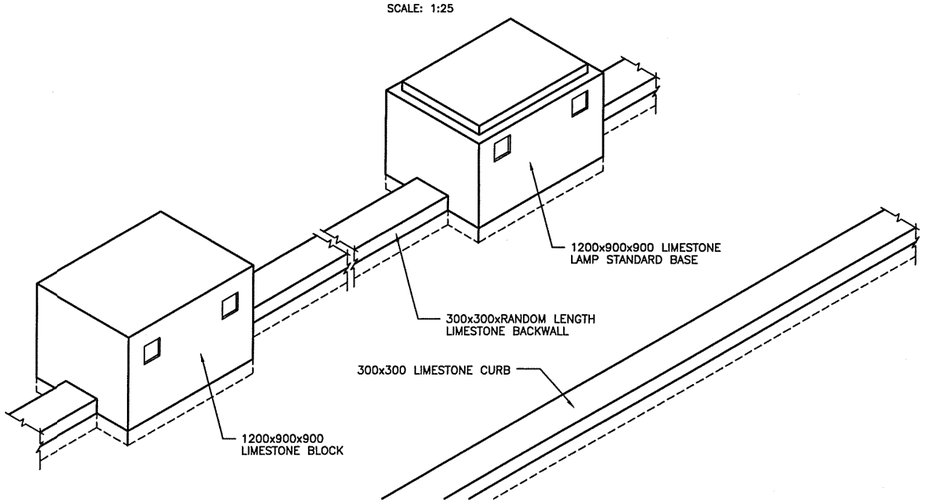

RIVER WALK ISOMETRIC DETAIL

SCALE: NTS

METRIC
WHOLE NUMBERS INDICATE MILLIMETRES
DECIMALIZED NUMBERS INDICATE METRES

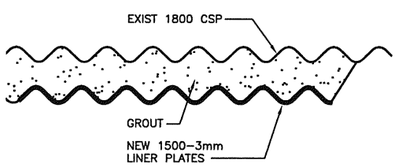

1/04 DETAIL
SCALE: 1:5

APEGM
Certificate of Authorization
KGS Group
No. 245 Expiry: April 30, 2006

LOCATION APPROVED
UNDERGROUND STRUCTURES

SUPV. U/G STRUCTURES COMMITTEE — DATE

NOTE:
LOCATION OF UNDERGROUND STRUCTURES AS SHOWN ARE BASED ON THE BEST INFORMATION AVAILABLE BUT NO GUARANTEE IS GIVEN THAT ALL EXISTING UTILITIES ARE SHOWN OR THAT THE GIVEN LOCATIONS ARE EXACT. CONFIRMATION OF EXISTENCE AND EXACT LOCATION OF ALL SERVICES MUST BE OBTAINED FROM THE INDIVIDUAL UTILITIES BEFORE PROCEEDING WITH CONSTRUCTION.

B.M.
ELEV.

NO.	REVISIONS	DATE	BY
0	ISSUED FOR TENDER	08/12/05	RJH
A	ISSUED FOR REVIEW	25/11/05	RJH

KGS GROUP — CONSULTING ENGINEERS & PROJECT MANAGERS
WINNIPEG (204) 895–1209
THUNDER BAY (807) 345–2233

DESIGNED BY RJH	CHECKED BY RJH
DRAWN BY DW	APPROVED BY
HOR. SCALE: AS NOTED VERTICAL:	RELEASED FOR CONSTRUCTION:
DATE 12/09/05	DATE

ENGINEER'S SEAL
PROVINCE OF MANITOBA
R.J. HOUSTON
Member
4395
REGISTERED PROFESSIONAL ENGINEER

CONSULTANT DRAWING NO.
05–107–11_10

Winnipeg

THE CITY OF WINNIPEG
WATER & WASTE DEPARTMENT

OUTFALL REPAIRS

SILT FENCE & MISCELLANEOUS DETAILS

SHEET 10 OF 10
CAD FILE DRAWING NUMBER 05–107–11
CITY DRAWING NUMBER LD–3237

COWLEGEND