SHEET: COW-A1 (05/2005)

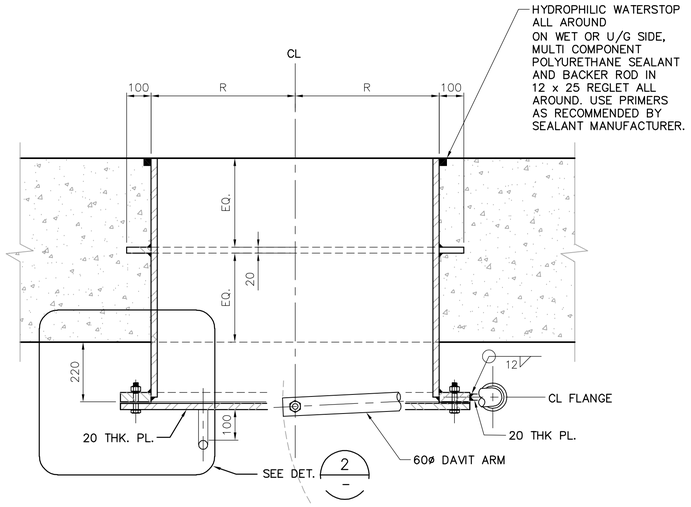

900ø WALL MANWAY PLAN

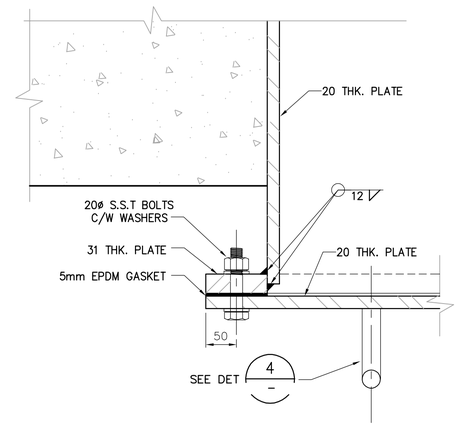

2 DETAIL NTS

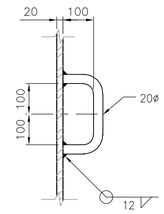

4 DETAIL NTS

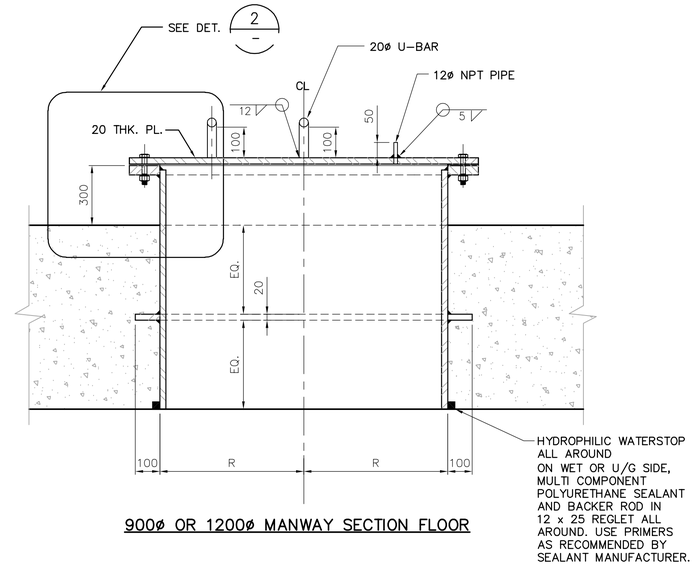

900ø OR 1200ø MANWAY SECTION FLOOR

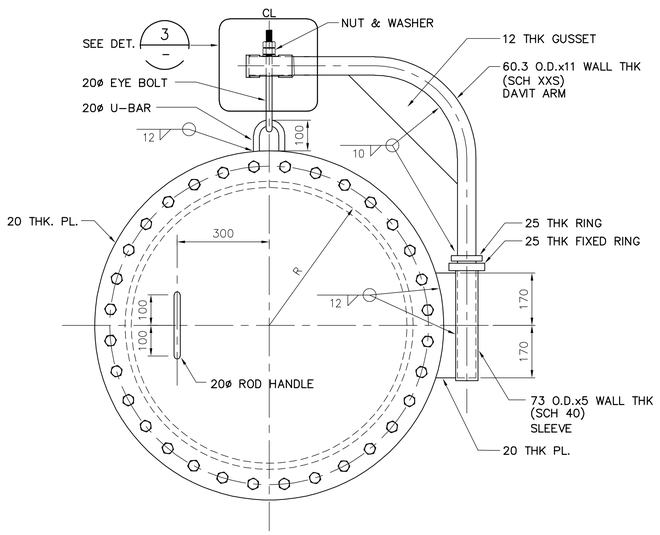

900ø WALL MANWAY ELEVATION

NOTE:
1) FLANGE TO 900mm ANSI B16.5 150# AND AWWA C207
2) BLIND FLANGE MATERIAL TO MATCH WALL PIPE
3) FABRICATE DAVIT ARM AND SLEEVE FROM ASTM A106B STEEL PIPE
4) SHOP PRIME ALL SURFACES AND PAINT EXPOSED SURFACES AS PER SPECIFICATION SECTION 09870 SYSTEM 1
5) SUBMIT SHOP DRAWING FOR REVIEW

1 DETAIL NTS

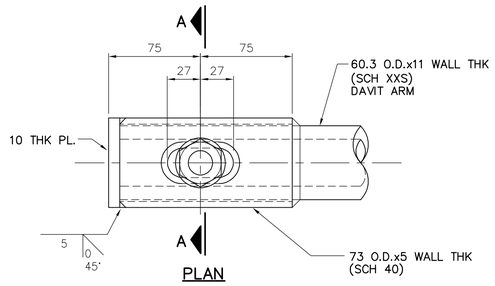

PLAN

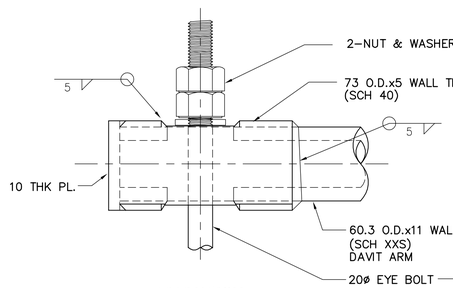

ELEVATION

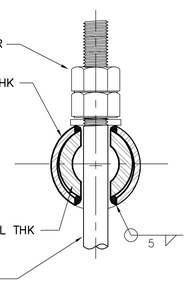

SECTION A-A

3 DETAIL NTS

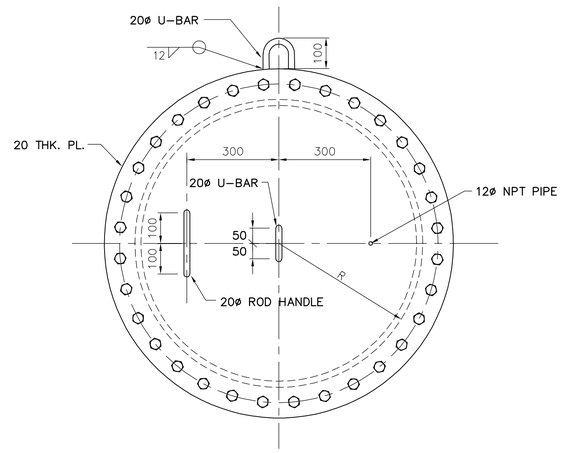

900ø OR 1200ø MANWAY FLOOR

NOTE:
1) FLANGE TO 900mm OR 1200mm ANSI B16.5 150# AND AWWA C207
2) BLIND FLANGE MATERIAL TO MATCH WALL PIPE
3) FABRICATE DAVIT ARM AND SLEEVE FROM ASTM A106B STEEL PIPE
4) SHOP PRIME ALL SURFACES AND PAINT EXPOSED SURFACES AS PER SPECIFICATION SECTION 09870 SYSTEM 1
5) SUBMIT SHOP DRAWING FOR REVIEW

5 DETAIL NTS

SCALE 1:50 METRES 0 1 2 3 4 5
SCALE 1:1 MILLIMETRES 0 20 40 60 80 100

APEGM
Certificate of Authorization
CH2M HILL Canada Ltd.
No. 1441 Expiry: April 30, 2007

B.M. ELEV.

NO.	REVISIONS	DATE	BY
01	742-2005 ADDENDUM 3	06/05/05	DKC
00	ISSUED FOR TENDER	2006/02/03	DKC

CH2MHILL
Fredericksen Cooper ARCHITECTS
EarthTech A Tyco International Ltd. Company

DESIGNED BY	DK/DKC	CHECKED BY	LS
DRAWN BY	PM	APPROVED BY	DJT
SCALE:	AS SHOWN	RELEASED FOR CONSTRUCTION BY:	R. SOROKOWSKI
DATE	2005/11/10	DATE	2006/02/08

ENGINEER'S SEAL
ORIGINAL SIGNED BY
P. WOBMA
2006/02/06

CONSULTANT DRAWING NO.
WB-M9454

Winnipeg
THE CITY OF WINNIPEG
WATER AND WASTE DEPARTMENT
ENGINEERING DIVISION

WATER TREATMENT PLANT
MAIN BUILDING
MECHANICAL AND ELECTRICAL

PROCESS MECHANICAL

STANDARD DETAILS

CITY FILE NUMBER
SHEET OF
CITY DRAWING NUMBER
1-0601B-A-M9454-001-01D

Last Save: 2006-05-04 10:55 AM

C:\DOCUMENTS AND SETTINGS\SEVERITT\MY DOCUMENTS\NDMPROJ\321352 - WINNIPEGWTP\DN_WB-M9454_CH2M.DWG