SHEET: COW-A1 (05/2005)

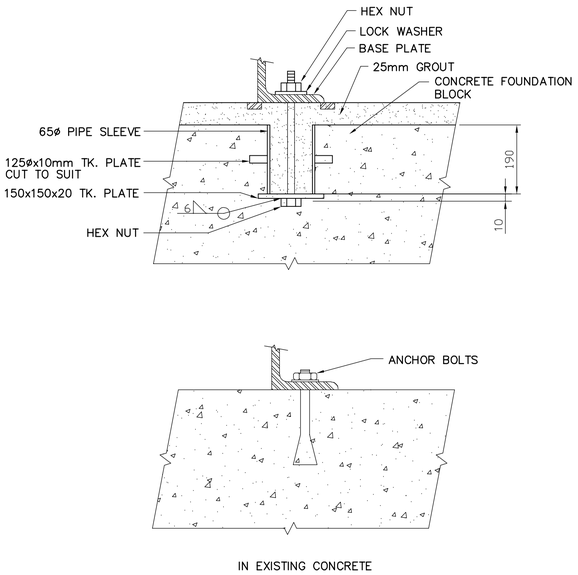

1 PUMP ANCHOR BOLT

ET
STD 220

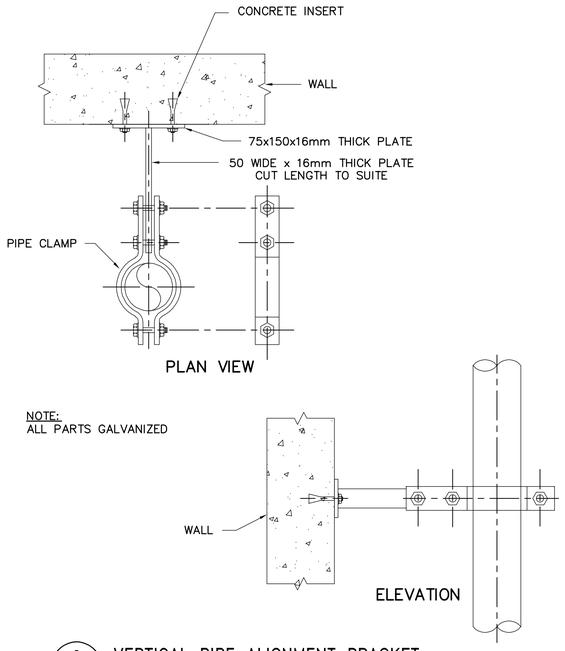

NOTE:
ALL PARTS GALVANIZED

2 VERTICAL PIPE ALIGNMENT BRACKET

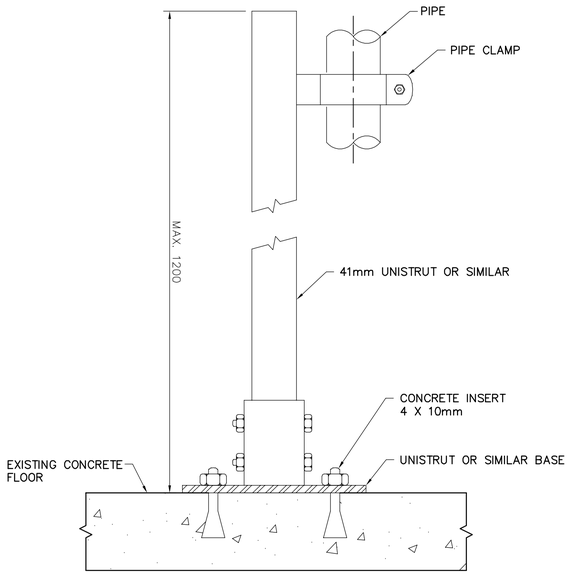

3 FLOOR MOUNTED VERTICAL PIPE SUPPORT

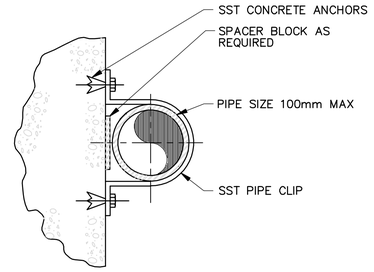

NOTES:

1. ALL DIMENSIONS IN MILLIMETERS, UNLESS OTHERWISE NOTED
2. FOR VERTICAL PIPES ONLY.
3. PROVIDE PIPE PROTECTION BARRIER AS SPECIFIED. FABRICATE OVERSIZE STRAP WHERE REQUIRED.

4 PIPE SUPPORT – WALL MOUNT

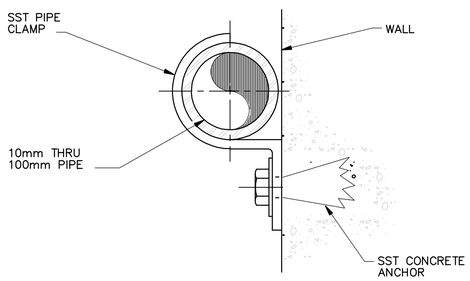

NOTES:

1. ALL DIMENSIONS IN MILLIMETERS, UNLESS OTHERWISE NOTED
2. FOR INSTALLATION OF PIPES ON WALLS ONLY.
3. NOT FOR USE HORIZONTALLY ON CEILINGS OR BOTTOMS OF BEAMS.
4. PROVIDE PIPE PROTECTION BARRIER AS SPECIFIED.

5 PIPE SUPPORT – WALL MOUNTED

CH
15504

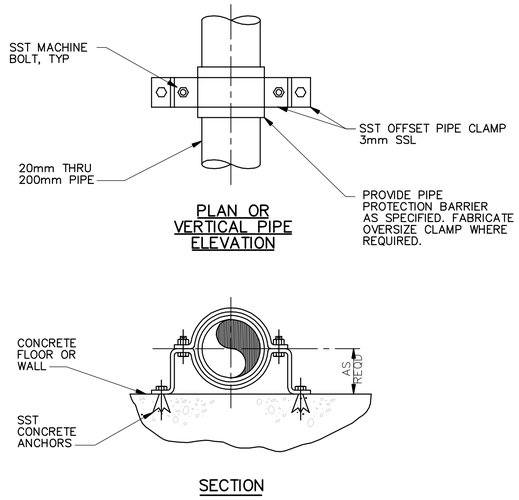

NOTES :
1 ALL DIMENSIONS IN MILLIMETERS, UNLESS OTHERWISE NOTED.

6 PIPE SUPPORT – WALL MOUNTED

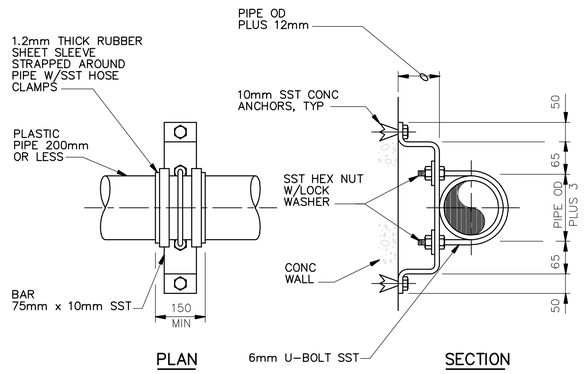

NOTES :
1 ALL DIMENSIONS IN MILLIMETERS, UNLESS OTHERWISE NOTED.

7 PIPE SUPPORT – WALL MOUNTED

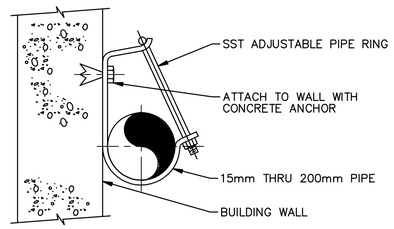

NOTES:

1. ALL DIMENSIONS IN MILLIMETERS, UNLESS OTHERWISE NOTED.
2. PROVIDE PIPE PROTECTION BARRIER AS SPECIFIED.

8 PIPE SUPPORT – WALL MOUNTED

APEGM
Certificate of Authorization
CH2M HILL Canada Ltd.
No. 1441 Expiry: April 30, 2006

B.M.
ELEV.

NO.	REVISIONS	DATE	BY
00	ISSUED FOR TENDER	06/03/29	TB

CH2MHILL
Frederickson Cooper ARCHITECTS
EarthTech A Tyco International Ltd. Company

DESIGNED BY	TB	CHECKED BY	LS
DRAWN BY	P SINGH	APPROVED BY	AHL
SCALE:	NTS	RELEASED FOR CONSTRUCTION BY:	R. SOROKOWSKI
DATE	2005/12/02	DATE	2006/03/29

ENGINEER'S SEAL
ORIGINAL SIGNED BY
P. WOBMA
2006/03/29

CONSULTANT DRAWING NO.
WB-M0458

Winnipeg
THE CITY OF WINNIPEG
WATER AND WASTE DEPARTMENT
ENGINEERING DIVISION

WATER TREATMENT PLANT
MAIN BUILDING
MECHANICAL AND ELECTRICAL

PROCESS MECHANICAL

STANDARD DETAILS

CITY FILE NUMBER
SHEET OF
CITY DRAWING NUMBER
1-0601B-A-M0458-001-00D

Last Save: 2006-03-27 12:46 PM

P:\EARTHTECH\321352WINNIPEGWTP\NDM\DESIGN\ACAD\DN_WB-M0458_CH2M.DWG