Plant List

Qty	Botanical Name	Common Name	Size / Remarks - NOTE: ALL TREES TO BE SPECIMEN QUALITY.
13	picea glauca densata	BLACKHILLS SPRUCE	2.4 METRE HT. MIN. 950mm ROOTBALL. 2 STAKES.
4	picea glauca densata	BLACKHILLS SPRUCE	3.0 METRE HT. MIN. 1100mm ROOTBALL. 2 STAKES.
2	Tilia americana	AMERICAN BASSWOOD	MIN. 65mm CALIPER, 3000mm HT. WELL BRANCHED HEAD ABOVE 1200mm HT. MIN. 750mm ROOTBALL, 2 STAKES.
12	Syringa meyeri 'Palibin'	DWARF KOREAN LILAC	MIN. 10 STEMS, EACH STEM TO BE MIN. 500mm HT. CONTAINER.
21	Syringa x prestoniae 'Miss Canada'	MISS CANADA LILAC	MIN. 6 BASAL STEMS, EACH STEM TO BE MIN. 900mm HT. CONTAINER.
10	Cornus alba Sibirica	SIBERIAN DOGWOOD	MIN. 6 BASAL STEMS, EACH STEM TO BE MIN. 900mm HT. CONTAINER.
18	Ribes alpinum	ALPINE CURRANT	MIN. 10 STEMS, EACH STEM TO BE MIN. 500mm HT. CONTAINER.
15	Potentilla fruticosa 'Gold Drop'	GOLD DROP POTENTILLA	MIN. 6 STEMS, EACH STEM TO BE MIN. 300mm HT. CONTAINER.
23	hermocallis	DAYLILY	MIXED COLOURS, MIN. 4 VARIETIES, ZONE 3 OR LESS, 2 YEAR OLD PLANTS. RANDOMLY MIX COLOURS.

GENERAL NOTES:

1. All sod for repairs shall conform with CW.3510 & 3540 and all sod shall be installed over a minimum 75 mm depth of screened topsoil. Topsoil shall not contain more than 30% peat.

2. All shrub beds shall contain a minimum 300 mm depth of mixed topsoil, 4 way mix. Cover all shrub beds with a 100 mm dep th of wood chip mulch.

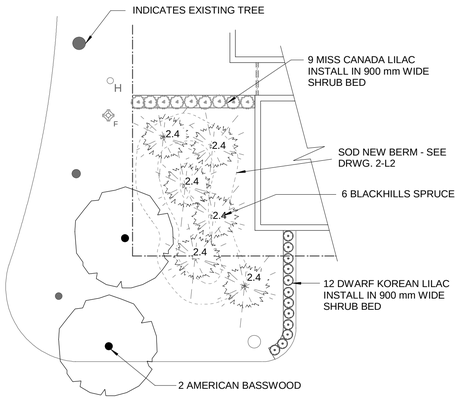

6 / L3 FRONT OF PUMPING STATION LANDSCAPE PLAN
Scale: 1:200

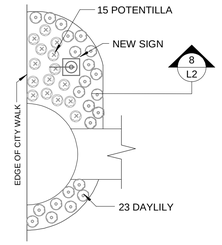

7 / L3 FRONT ENTRANCE LANDSCAPE PLAN
Scale: 1:100

8 / L3 PLANTING PLAN
Scale: 1:200

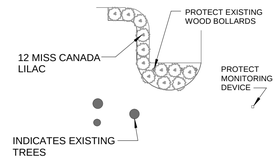

9 / L3 PLANTING PLAN
Scale: 1:200

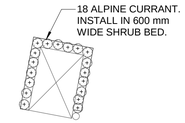

10 / L3 UNDERGROUND VAULT PLANTING PLAN
Scale: 1:200

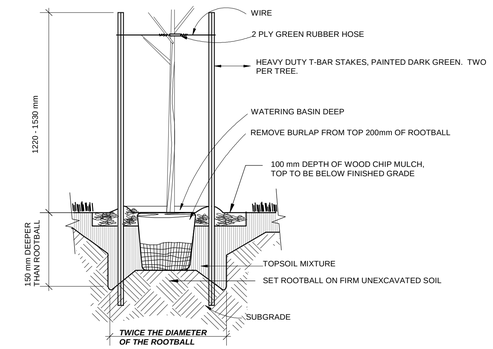

11 / L3 TREE PIT / PLANTING DETAIL

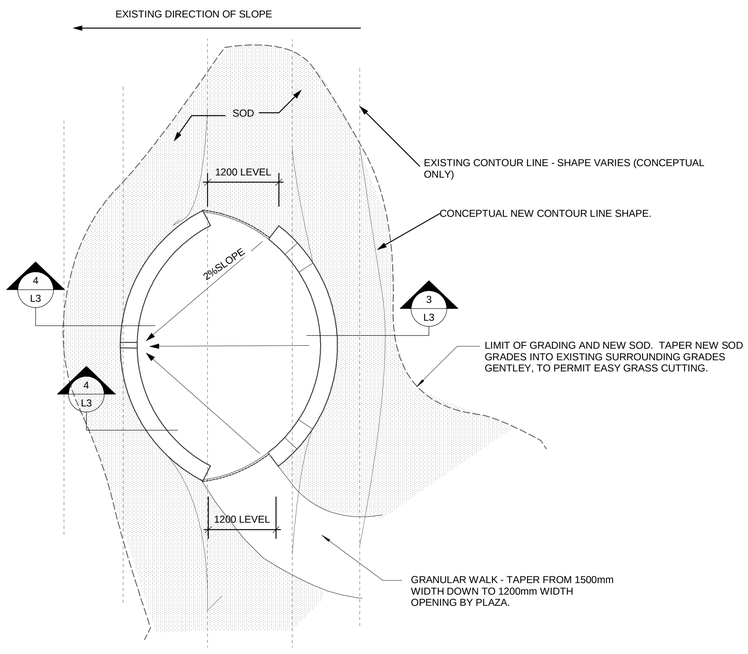

5 / L3 VIEWING PLATFORM - LANDSCAPE PLAN
Scale: 1:50

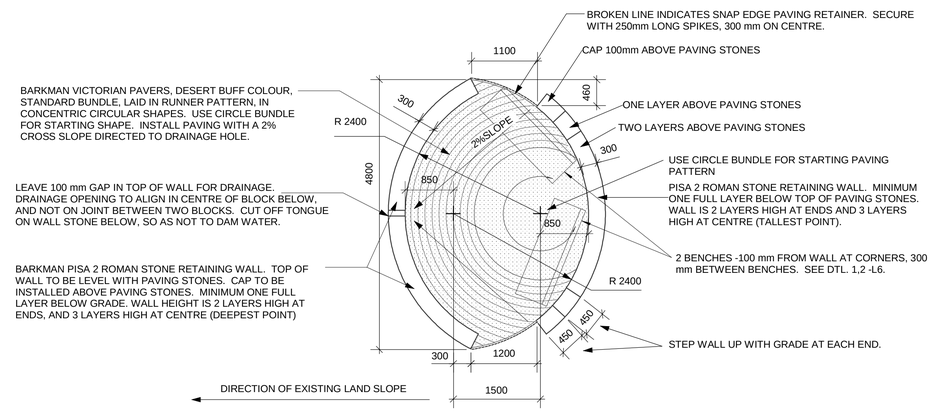

1 / L3 VIEWING PLATFORM - LAYOUT PLAN
Scale: 1:50

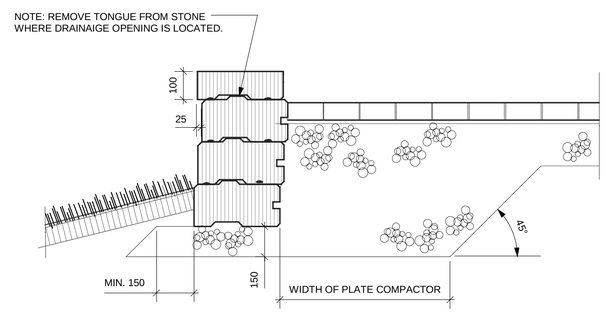

4 / L3 VIEWING PLATFORM - LOWER WALL SECTION
Scale: 1:10

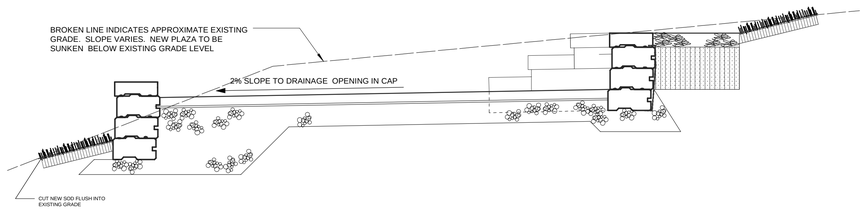

2 / L3 VIEWING PLATFORM - CROSS SECTION
Scale: 1:20

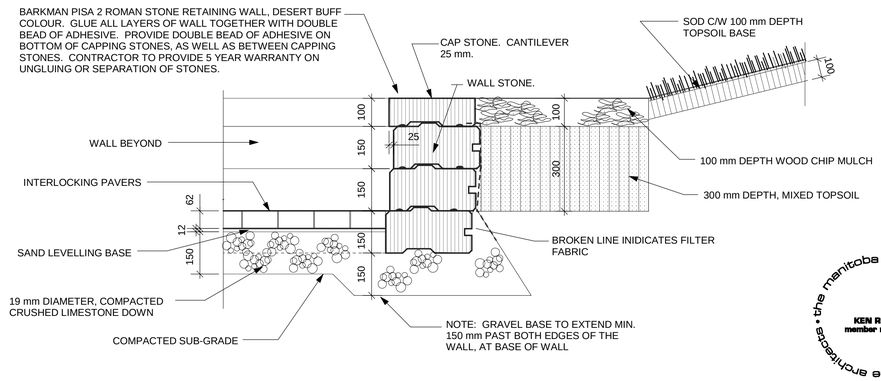

3 / L3 VIEWING PLATFORM - UPPER WALL SECTION
Scale: 1:10

the manitoba association of landscape architects
KEN RECH
member no. 45

RELEASED FOR CONSTRUCTION
MANAGER PARKS & OPEN SPACE DIVISION

ISSUED FOR TENDER APRIL 4, 2006

PROJECT TITLE	NO.	REVISIONS	BY	DATE
AUBREY GREEN 1020 Palmerston Avenue				

KEN RECH LANDSCAPE ARCHITECTS INC.
1480 Wellington Crescent Winnipeg Manitoba R3N 0B3
Fax 489-6852 Tel(204) 489-6616

DRAWING TITLE	DRAWN BY	SCALE	SHEET NO.
MISCELLANEOUS DETAILS	KEN RECH	AS NOTED	L3
	PRINT DATE: APRIL 4/06	DATE: JULY 15/2005	
	FILE NO.: 04-01-C	REVISION	