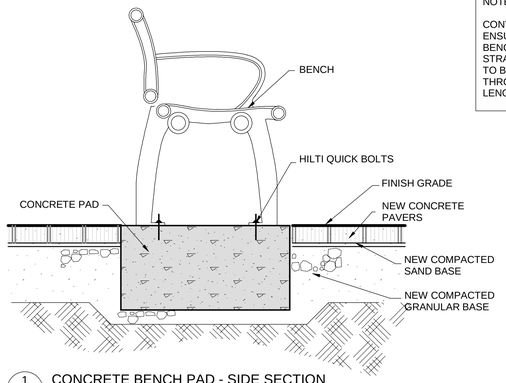

1 / L6 CONCRETE BENCH PAD - SIDE SECTION
Scale: 1:10

NOTE:

CONTRACTOR TO ENSURE BENCH / BENCH ARM SET STRAIGHT AND PLUMB TO BE LEVEL THROUGHOUT LENGTH.

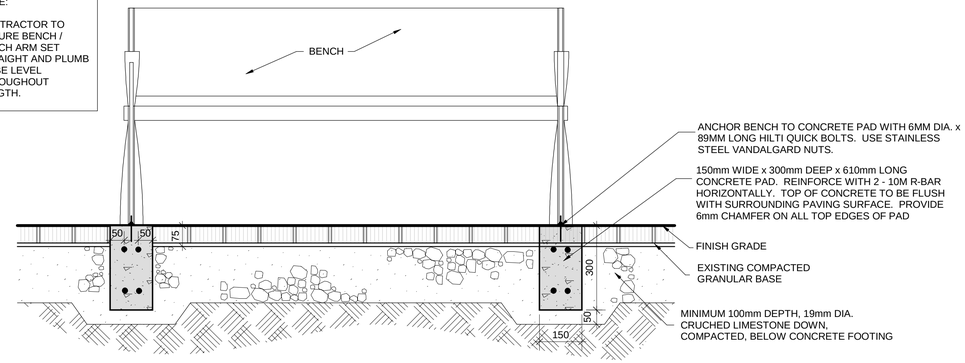

2 / L6 CONCRETE BENCH PAD - FRONT SECTION/ELEVATION
Scale: 1:10

PARK NAME	ADDRESS
Greenwood Park	**1270 Wolseley Avenue**
Aubrey Green	**1020 Palmerston Avenue**
Arlington Green	**1 Arlington Street**
William Marshall Park	**440 Dominion Street**
Canora Green	**850 Palmerston Avenue**

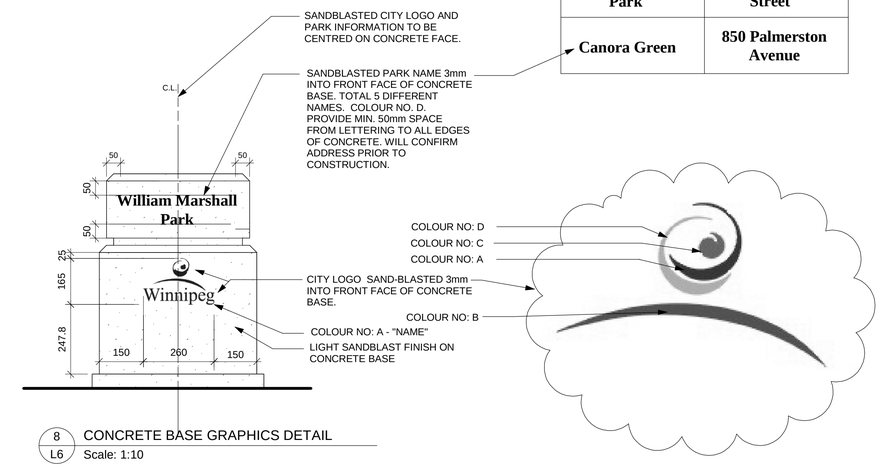

8 / L6 CONCRETE BASE GRAPHICS DETAIL
Scale: 1:10

NOTE:

SIDE WHERE OF CITY LOGO IS TO BE SAND BLASTED WILL BE FIELD LOCATED

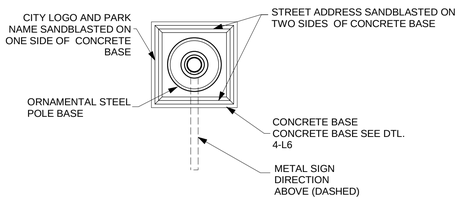

3 / L6 CONCRETE BASE PLAN VIEW
Scale: 1:20

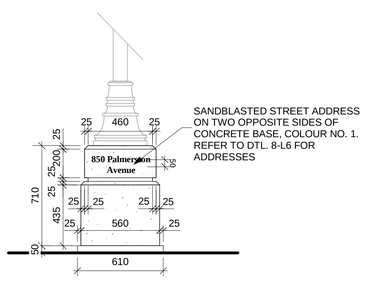

4 / L6 CONCRETE BASE SIDE ELEVATION
Scale: 1:20

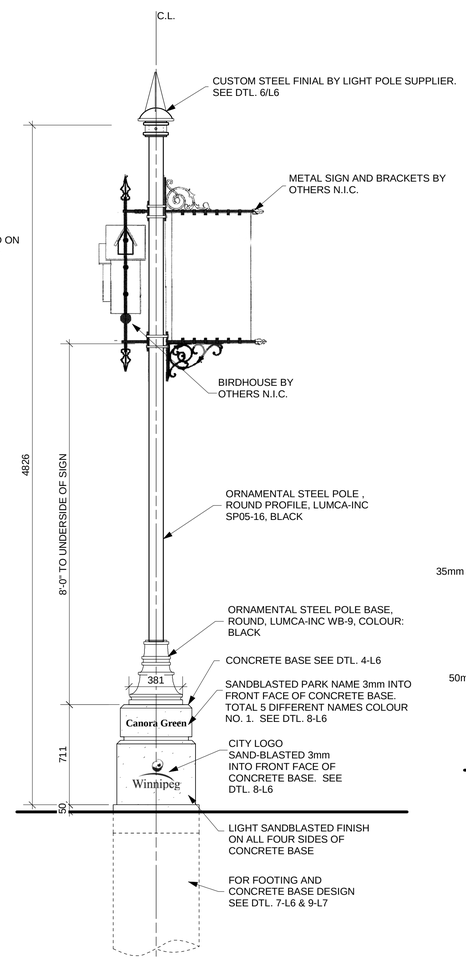

5 / L6 SIGN POST FRONT ELEVATION
Scale: 1:20

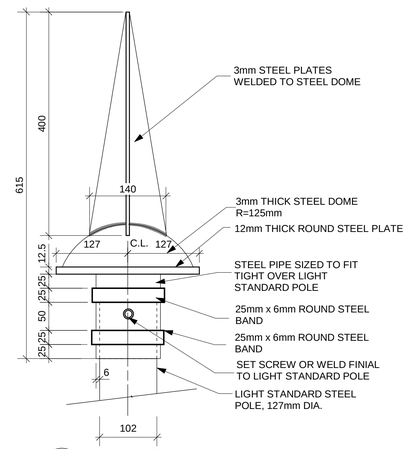

6 / L6 FINIAL DETAIL
Scale: 1:5

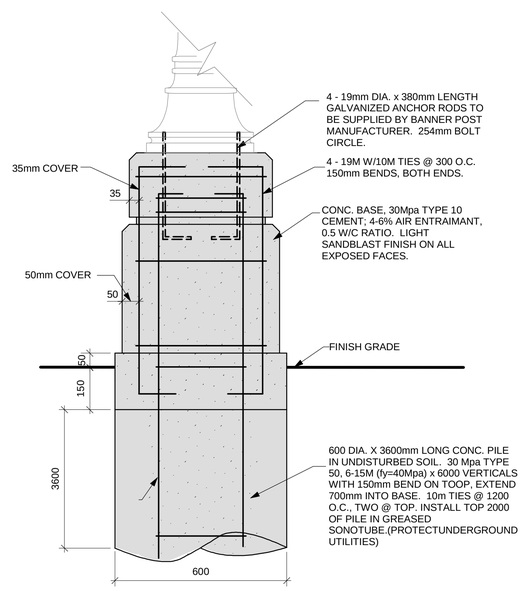

7 / L6 CONCRETE BASE WITH PILE TYPE FOOTING DETAIL
Scale: 1:10

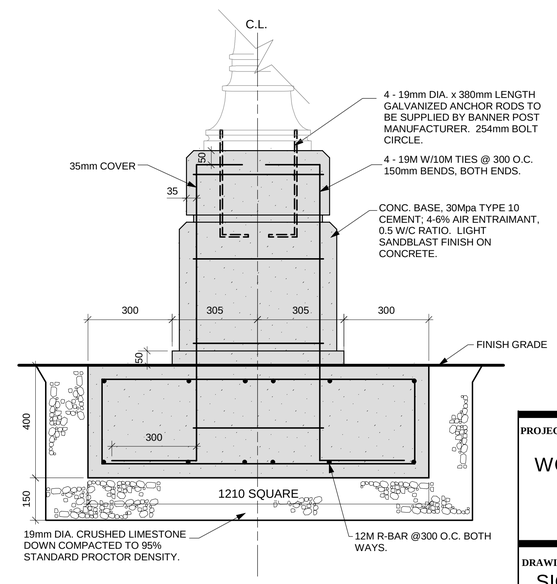

9 / L6 SHALLOW CONCRETE BASE WITH PAD TYPE FOOTING DETAIL
Scale: 1:10

the manitoba association of landscape architects
KEN RECH
member no. 45

ENGINEER SEAL FOR STRUCTURE ONLY. ENGINEER NOT RETAINED FOR CONSTRUCTION REVIEW.

RELEASED FOR CONSTRUCTION

MANAGER PARKS & OPEN SPACE DIVISION

ISSUED FOR TENDER APRIL 4, 2006

PROJECT TITLE

WOLSELEY SITES

NO.	REVISIONS	BY	DATE

KEN RECH LANDSCAPE ARCHITECTS INC.
1480 Wellington Crescent Winnipeg Manitoba
Fax 489-6852 R3N 0B3 Tel(204) 489-6616

DRAWING TITLE

SIGN POST AND BENCH ANCHORING DETAILS

DRAWN BY	SCALE	SHEET NO.
K.RECH	AS NOTED	L6
PRINT DATE: APRIL 4/06	DATE: JULY 15/ 05	
FILE NO.: 04-01-E	REVISION: 0	