SHEET: COW-A1 (05/2005)

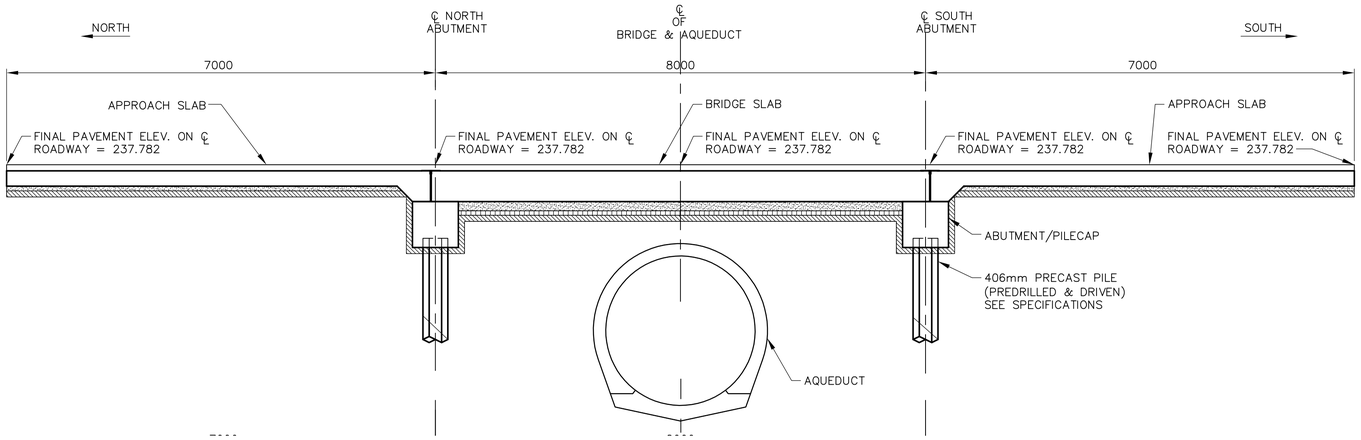

ELEVATION

SCALE 1:50

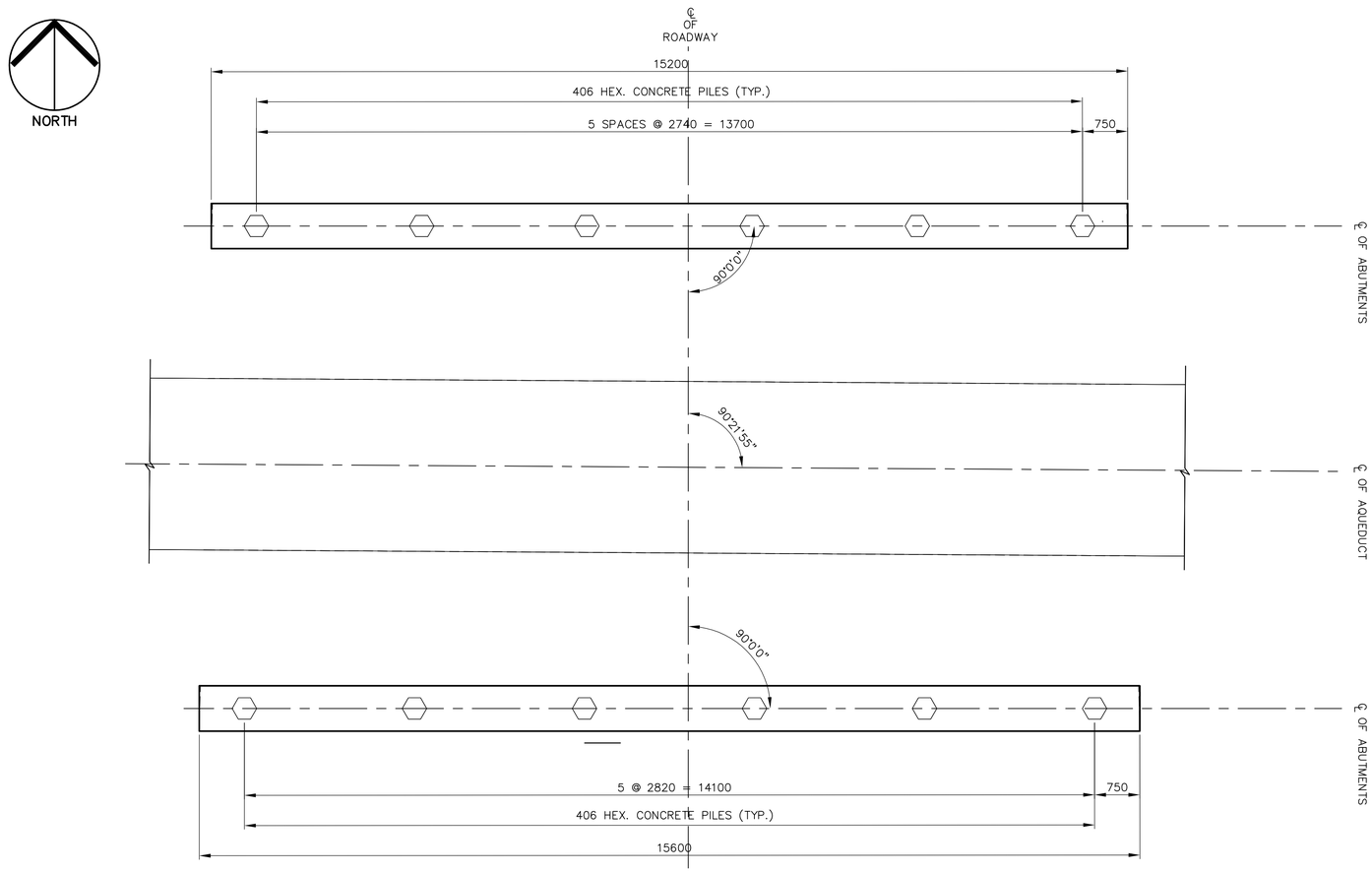

FOUNDATION PLAN

SCALE 1:50

Released to the City of Winnipeg for Tendering Purposes

ORIGINAL SIGNED
Eric Christiansen P.Eng.
Director of Highway Planning & Design
Manitoba Transportation & Government Services
Date: MAY 16, 2006
MTGS Plan No. 7161

APEGM
Certificate of Authorization
Earth Tech Canada Inc.
No. 730 Expiry: April 30, 2007

B.M.
ELEV.

NO.	REVISIONS	DATE	BY
00	ISSUED FOR TENDER	06/05/16	KC

CH2MHILL
Fredericksen Cooper ARCHITECTS
EarthTech A Tyco International Ltd. Company

DESIGNED BY	AP	CHECKED BY	EBL
DRAWN BY	KC	APPROVED BY	AHL
SCALE:	AS NOTED	RELEASED FOR CONSTRUCTION BY:	R. SOROKOWSKI
DATE	2006/04/07	DATE	May 16, 2006

ENGINEER'S SEAL
ORIGINAL SIGNED BY
ASNEE POCHANART
May 16, 2006

CONSULTANT DRAWING NO.
WN-S0151

Winnipeg
THE CITY OF WINNIPEG
WATER AND WASTE DEPARTMENT
ENGINEERING DIVISION

WINNIPEG WATER TREATMENT
PROGRAM – PROVINCIAL ROAD #207 UPGRADE

CITY FILE NUMBER
SHEET OF

STRUCTURAL
PR #207 BRIDGE
BRIDGE LAYOUT AND ELEVATION

CITY DRAWING NUMBER
1-0601N-A-S0151-001-00D

Last Save: 2006-05-17 3:46 PM

L:\WORK\79000\79538\02A-CAD\TRA\CONTR\PR 207\DN_WN-S0151.DWG