KU-34-665

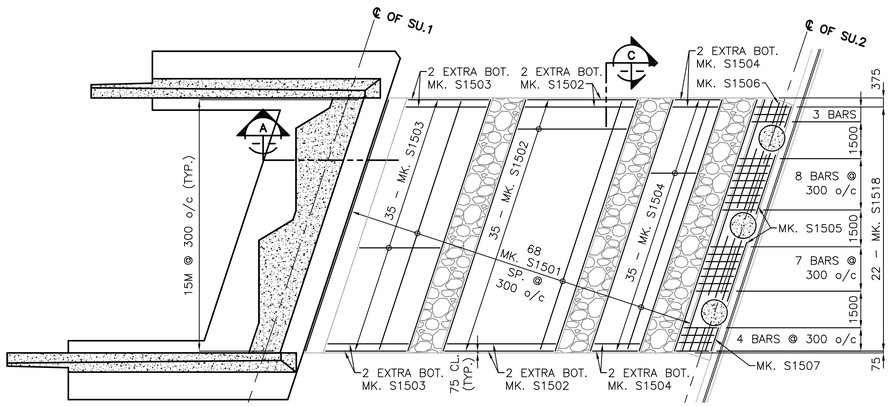

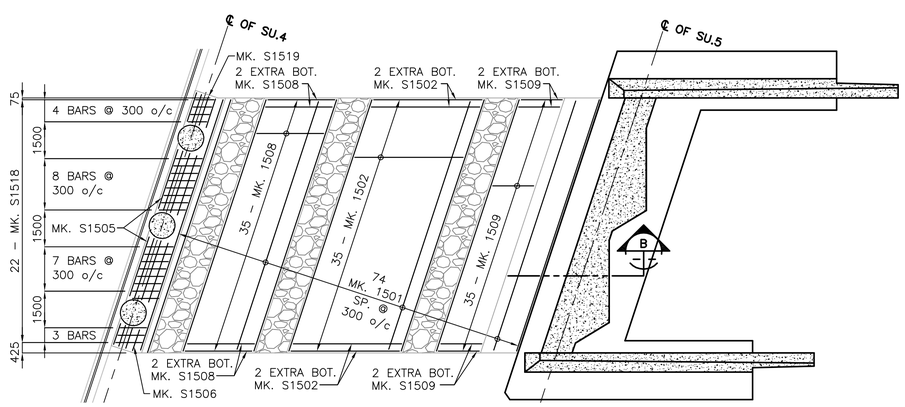

PLAN LAYOUT

1:125 (0, 1250, 3750, 6250mm)

NOTE:
PLAN LAYOUT ONLY SHOWING STRAIGHT BARS & BENT BARS INBETWEEN CASSIONS. REMAINDER OF BENT BARS NOT SHOWN FOR CLARITY. SEE DETAILS ON THIS SHEET.

BILL OF REINFORCING STEEL FOR SLOPE PAVING

STRAIGHT BARS				BENT BARS									
MARK	QTY.	LENGTH (mm)	MASS (kg)	MARK	QTY.	TYPE	A	B	C	D	E	LENGTH (mm)	MASS (kg)
S1501	142	10790	2405.5	S1510	35	A	795	200	285	290	650	2220	122.0
S1502	78	4585	561.5	S1511	35	A	1365	200	285	290	650	2790	153.3
S1503	39	3530	216.1	S1512	70	E	1085	425	225	565	650	2950	324.2
S1504	39	2055	125.8	S1513	70	D	650	565	225	265	850	2555	280.8
S1505	24	2530	95.3	S1514	70	C	650	405	210	500	650	2415	265.4
S1506	12	880	16.8	S1515	140	B	650	290	650			1590	349.5
S1507	6	1000	9.4	S1516	70	B	650	290	1475			2415	265.4
S1508	39	2975	182.2	S1517	44	G	1510	200	225	290		2225	153.7
S1509	39	1910	116.9	S1518	128	F	420	225	190	320	140	1435	288.4
S1519	6	1215	11.4										

TOTAL MASS OF REINFORCING STEEL (kg.) = 5943.7

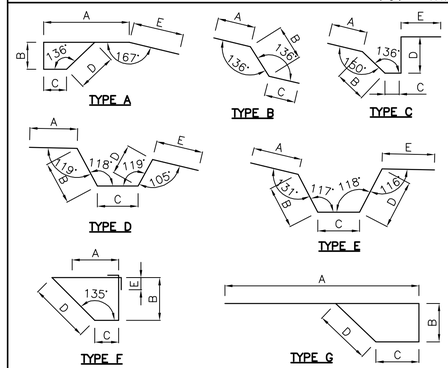

NOTE:
1. CONCRETE COVER SHALL BE THE FOLLOWING, UNLESS NOTED OTHERWISE,
   - 75mm TO BOTTOM STEEL OR, CONCRETE PLACED AGAINST GROUND
   - 50mm TO TOP STEEL

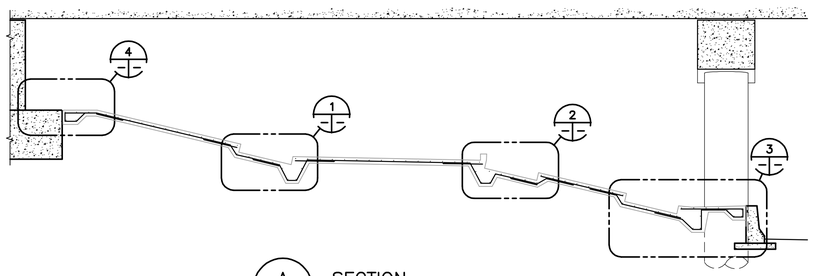

A SECTION

1:75 (0, 750, 2250, 3750mm)

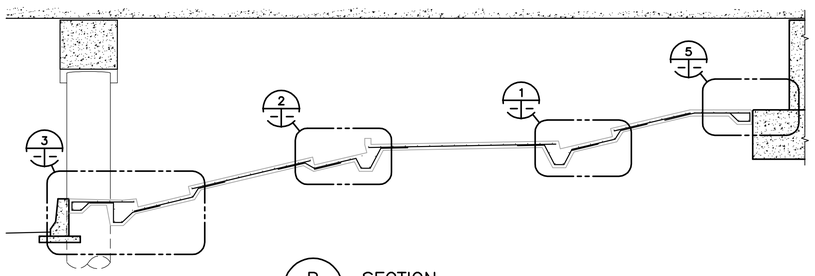

B SECTION

1:75 (0, 750, 2250, 3750mm)

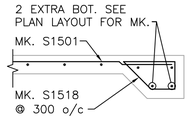

C SECTION

1:25 (0, 250, 750, 1250mm)

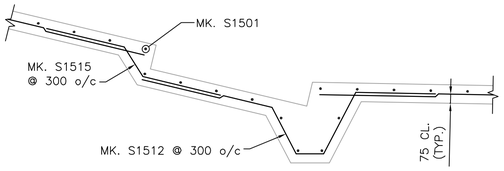

1 DETAIL

1:25 (0, 250, 750, 1250mm)

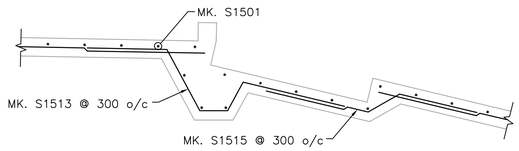

2 DETAIL

1:25 (0, 250, 750, 1250mm)

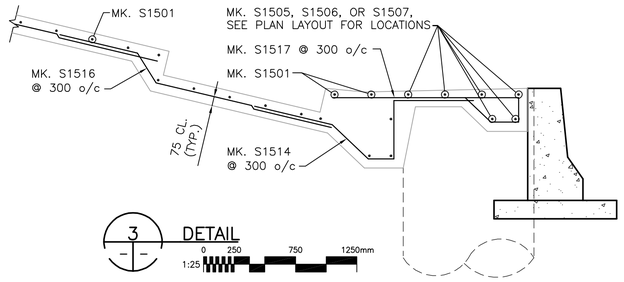

3 DETAIL

1:25 (0, 250, 750, 1250mm)

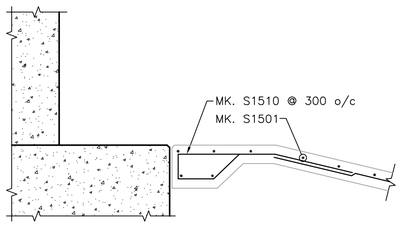

4 DETAIL

1:25 (0, 250, 750, 1250mm)

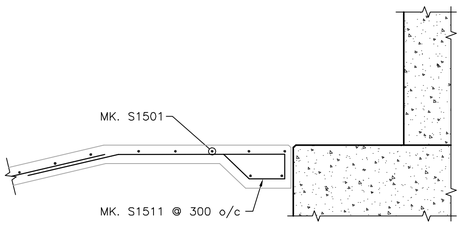

5 DETAIL

1:25 (0, 250, 750, 1250mm)

METRIC
WHOLE NUMBERS INDICATE MILLIMETRES
DECIMALIZED NUMBERS INDICATE METRES

APEGM
Certificate of Authorization
Stantec Consulting Ltd.
No. 1301 Expiry: April 30, 2006

LOCATION APPROVED
UNDERGROUND STRUCTURES

SUPV. U/G STRUCTURES COMMITTEE — DATE

NOTE:
LOCATION OF UNDERGROUND STRUCTURES AS SHOWN ARE BASED ON THE BEST INFORMATION AVAILABLE BUT NO GUARANTEE IS GIVEN THAT ALL EXISTING UTILITIES ARE SHOWN OR THAT THE GIVEN LOCATIONS ARE EXACT. CONFIRMATION OF EXISTENCE AND EXACT LOCATION OF ALL SERVICES MUST BE OBTAINED FROM THE INDIVIDUAL UTILITIES BEFORE PROCEEDING WITH CONSTRUCTION.

B.M.
ELEV.

NO.	REVISIONS	DATE	BY
0	ISSUED FOR TENDER	06.03.03	MJB

Stantec Consulting Ltd.
905 Waverley Street, Winnipeg, Manitoba
Tel 204-489-5900 Fax 204-453-9012

DESIGNED BY	MJB, KSA	CHECKED BY	GWM
DRAWN BY	JMB	APPROVED BY	MJB
HOR. SCALE:	AS SHOWN	AUTHORIZED BY:	DATE
VERTICAL:	AS SHOWN	R. FINGAS	06.03.03
DATE	05.11.09	R. FINGAS, P. ENG. BRIDGE PROJECTS ENGINEER	

ENGINEER'S SEAL
ORIGINAL SEALED BY M.J.BOISSONNEAULT P. ENG. 06.03.03

CONSULTANT DRAWING NO.
II3703042-S30

THE CITY OF WINNIPEG
PUBLIC WORKS DEPARTMENT
ENGINEERING DIVISION

KENASTON UNDERPASS PROJECT
KENASTON BOULEVARD RECONSTRUCTION

RAILWAY BRIDGE
CONCRETE SLOPE PAVING
REINFORCING DETAILS

SHEET 34 OF 52
CAD FILE DRAWING NUMBER ku-33-665.dwg
CITY DRAWING NUMBER P-3258-205

V:\1137\active\113703042 – Kenaston UP DESIGN\ACAD\CONTRACT 6 – Underpass etc\Bridge Finish\060220 – Tender Drawings\KU-33-665.dwg
2006-03-03 02:32PM By: jbennserts