SHEET: COW-A1 (05/2005)

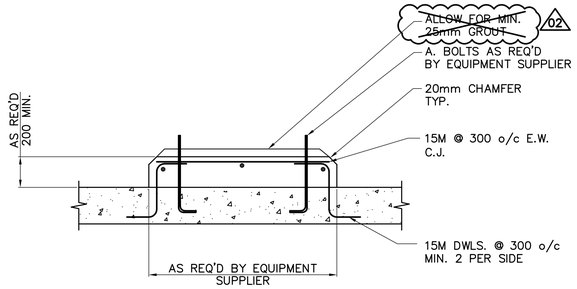

HOUSE KEEPING PADS FOR EQUIPMENT ON STRUCTURAL SLAB

SCALE N.T.S.

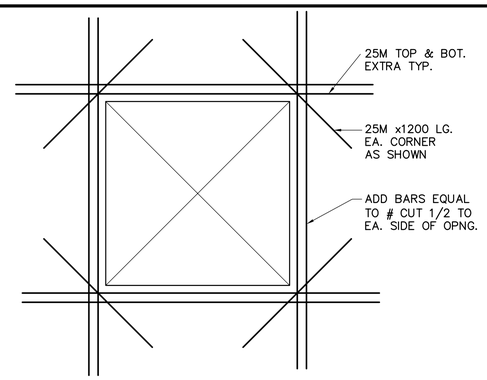

TYPICAL REINFORCING AROUND OPENINGS IN CONCRETE SLAB OR WALL

SCALE N.T.S.

1. NUMBER OF REINFORCING BARS TO BE CUT AT OPENING TO BE KEPT AT A MINIMUM. REPLACE CUT BARS WITH BARS OF SAME SIZE, HALF TO EACH SIDE OF OPENING. DEFLECT AS MANY BARS AS POSSIBLE AROUND OPENING.
2. REINFORCING BARS TO BE KEPT MINIMUM 50 CLEAR OF OPENING.
3. CIRCULAR OPENINGS TO BE TREATED IN SAME MANNER AS RECTANGULAR UNLESS OTHERWISE DETAILED.

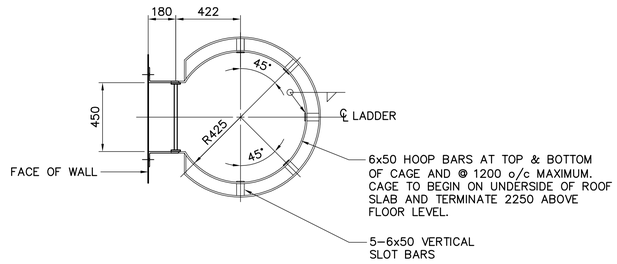

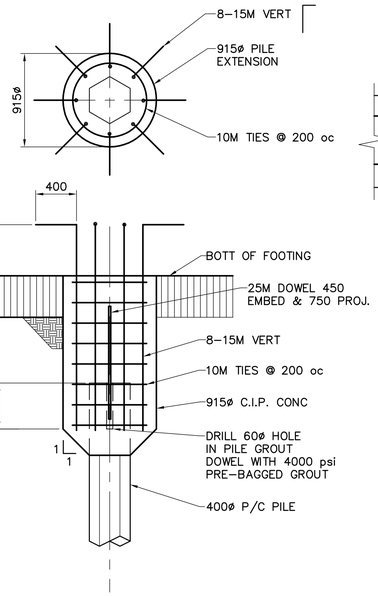

TYPE 1 – PILE EXTENSION DETAIL

N.T.S.

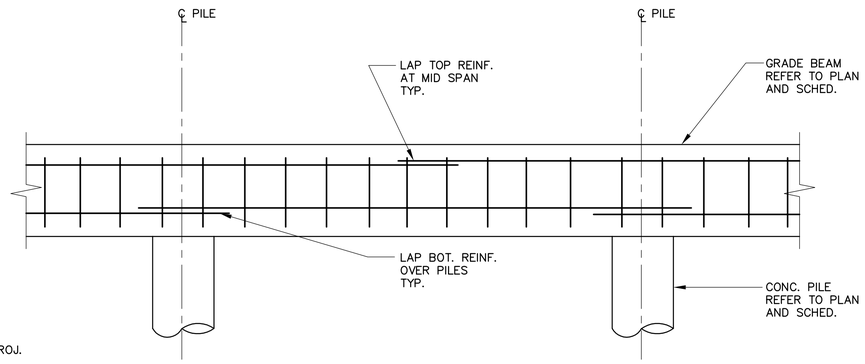

GRADE BEAM SPLICE DETAIL

SCALE N.T.S.

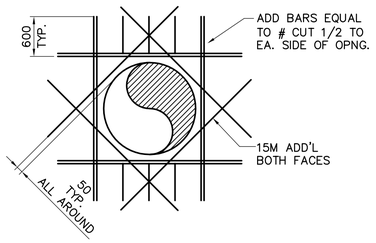

EXTRA REINFORCING AROUND PIPE UP TO 1250ø MAX. CAST IN WALL OR FLOOR SLAB

SCALE N.T.S.

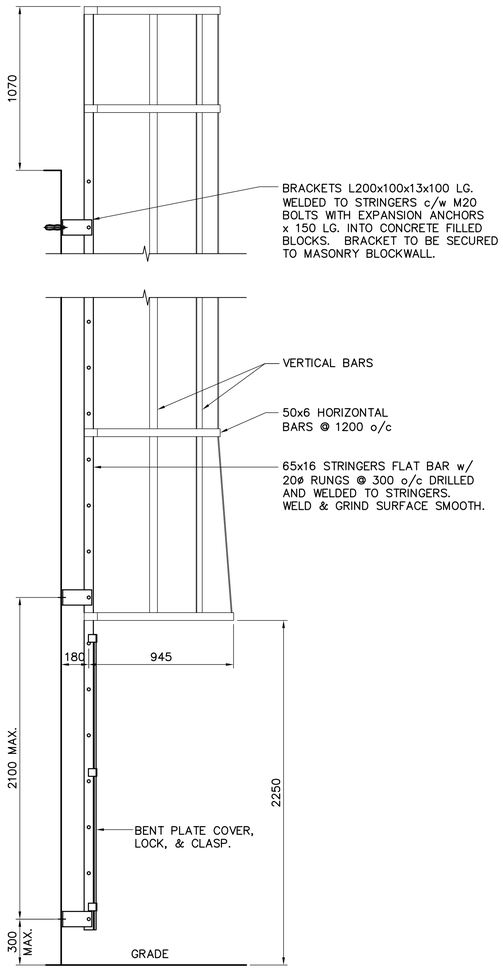

ALUMINUM LADDER AND CAGE DETAIL

SCALE N.T.S.

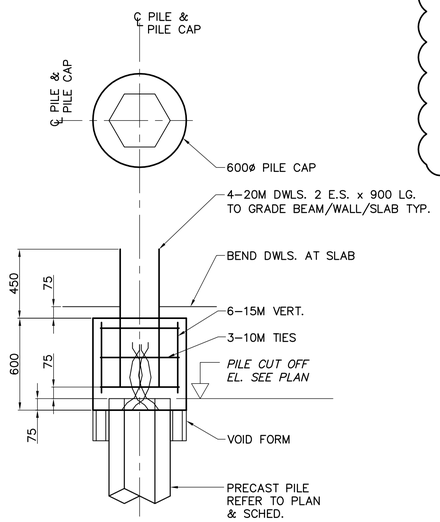

TYPICAL PILE CAP PC-1 DETAIL

SCALE 1:20

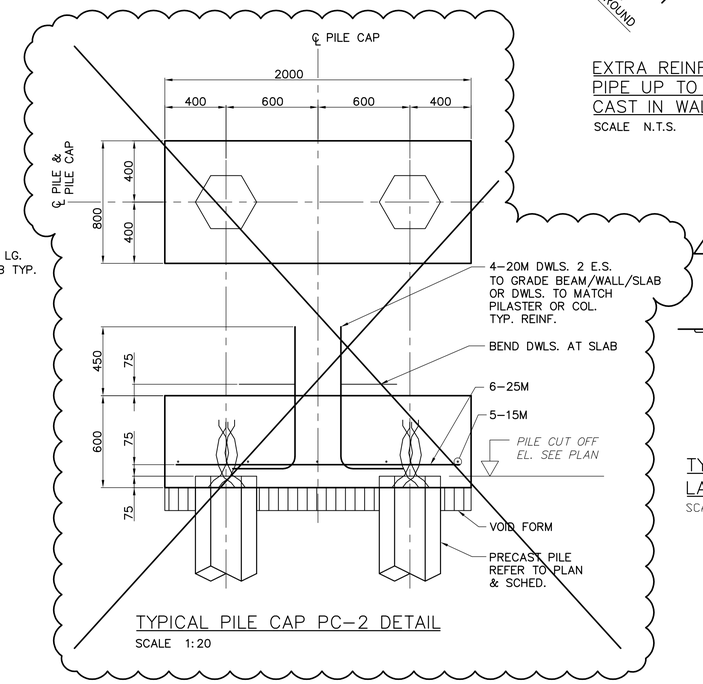

TYPICAL PILE CAP PC-2 DETAIL

SCALE 1:20

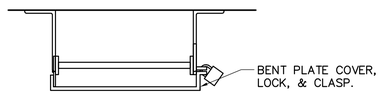

TYPICAL LOCKABLE LADDER COVER

SCALE N.T.S.

APEGM
Certificate of Authorization
Earth Tech Canada Inc.
No. 730 Expiry: April 30, 2007

B.M.
ELEV.

NO.	REVISIONS	DATE	BY
02	498-2006 ADDENDUM 3	06/09/28	KK
01	498-2006 ADDENDUM 2	06/09/22	KK
00	ISSUED FOR TENDER	06/08/28	KK

CH2MHILL
Frederickson Cooper ARCHITECTS
EarthTech A Tyco International Ltd. Company

DESIGNED BY	AP/GGP	CHECKED BY	MK
DRAWN BY	KK	APPROVED BY	AHL
SCALE:	AS SHOWN	RELEASED FOR CONSTRUCTION BY:	R. SOROKOWSKI
DATE	2006/06/16	DATE	2006/08/30

ENGINEER'S SEAL
ORIGINAL SIGNED BY
A. POCHANART
2006/08/30

CONSULTANT DRAWING NO.
WG-S0003

Winnipeg
THE CITY OF WINNIPEG
WATER AND WASTE DEPARTMENT
ENGINEERING DIVISION

WATER TREATMENT PLANT
STANDBY POWER GENERATOR

CITY FILE NUMBER
SHEET OF

STRUCTURAL
STANDARD DETAILS

CITY DRAWING NUMBER
1-0601G-A-S0003-001-02D

Last Save: 2006-09-28 1:11 PM

L:\WORK\79000\79538\02A-CAD\IND\CONTR\GENSET\DN_WG-S0003_ET.DWG