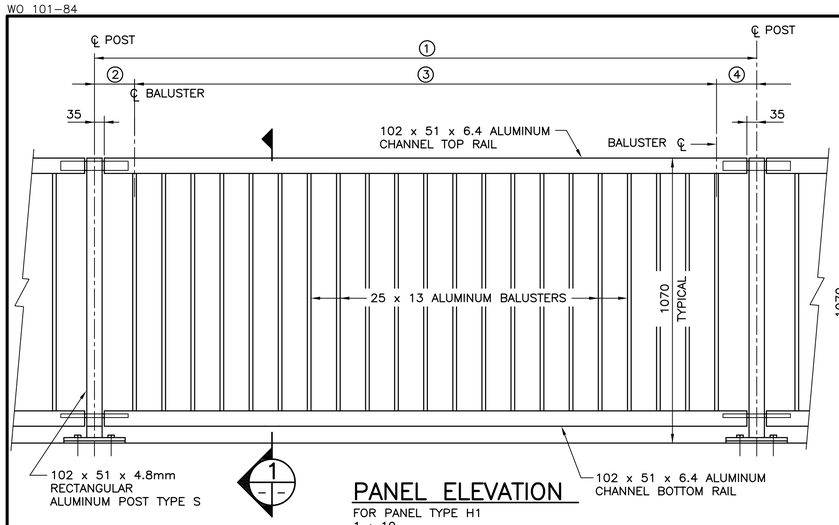

PANEL ELEVATION

FOR PANEL TYPE H1
1 : 10

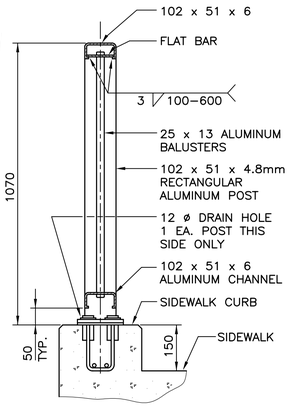

SECTION 1

1 : 10

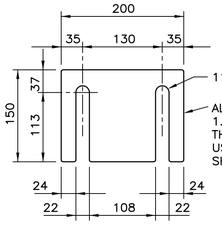

PEDESTRIAN POST SHIM

1 : 5

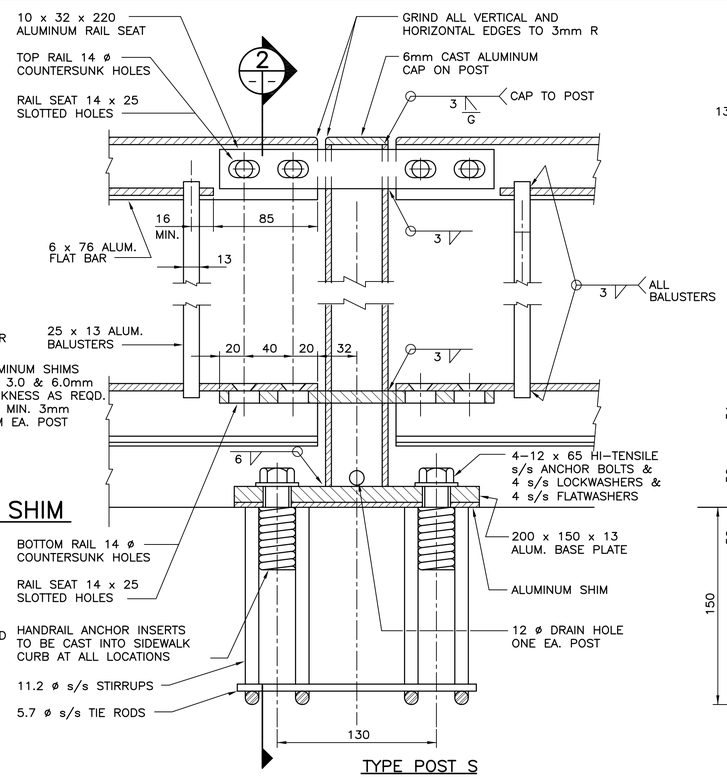

TYPE POST S

DETAIL AT INTERMEDIATE POSTS

1 : 2.5 (FOR POST TYPE A, B, C, D, & E SEE SHEET NO. 26) 3

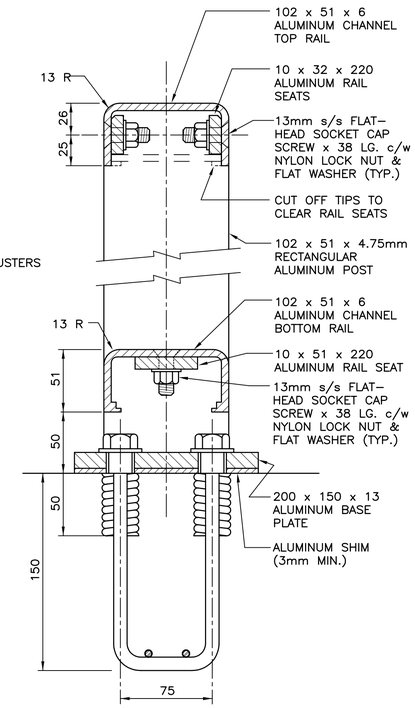

SECTION 2

1 : 2.5

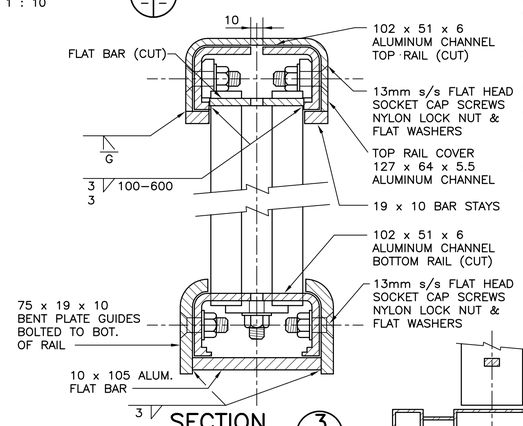

SECTION 3

1 : 2.5

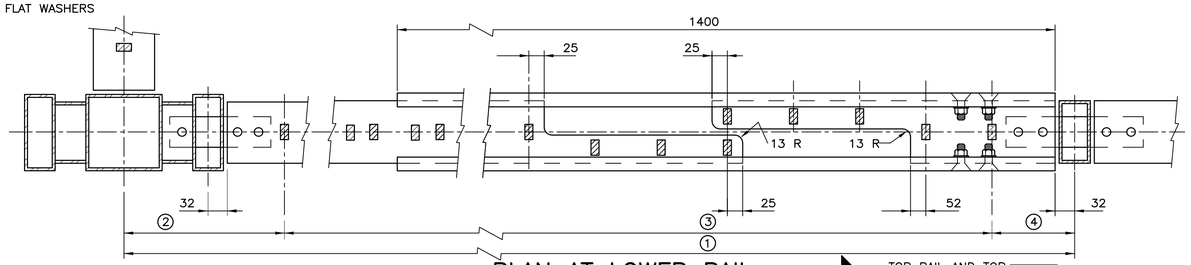

PLAN AT LOWER RAIL

1 : 5

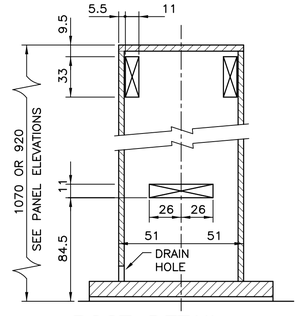

POST DETAIL

SHOWING SLOTS FOR RAIL SEATS
1 : 2.5

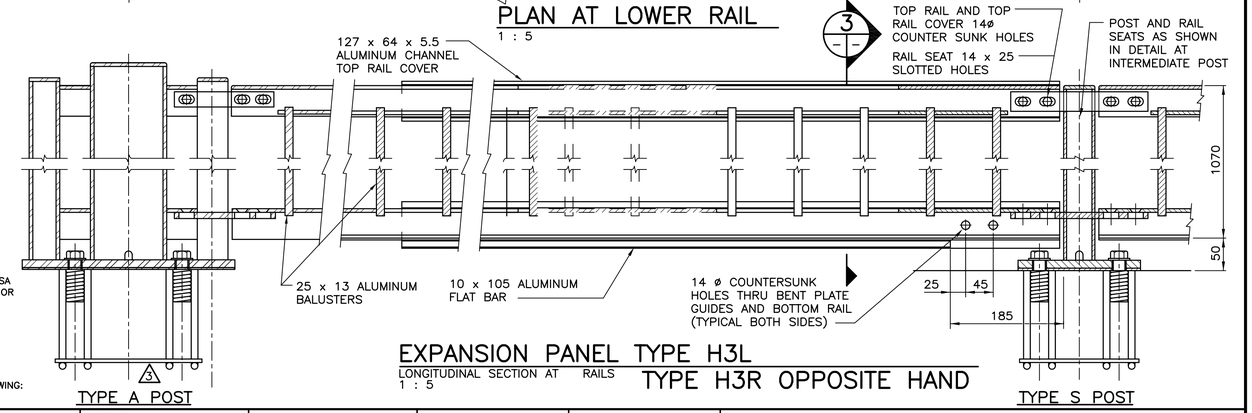

TYPE A POST

EXPANSION PANEL TYPE H3L

LONGITUDINAL SECTION AT RAILS
1 : 5

TYPE H3R OPPOSITE HAND

TYPE S POST

HANDRAIL POST SCHEDULE

POST TYPE	NO. REQ'D	COMPONENT (PER POST)
S	67	POST TYPE S 1-HSS 102x51x4.8 CENTRAL POST 2-220x32x10 TOP RAIL SEAT 1-200x51x10 BOT. RAIL SEAT 1-6mm CAP ON POST 1-200x150x13 BASE PLATE C/W 4-11.2 ø STIRRUPS 2-5.7 ø TIE RODS 4-12 øx65 ANCHOR BOLTS C/W LOCKWASHERS AND FLATWASHERS ALUMINUM SHIM (3mm THICK MIN.) AS REQUIRED.
A	10	POST TYPE A 1-HSS 127x127x6.4 CENTRAL POST AND 2-HSS 127x51x6.4 SIDE POSTS 2-HSS 102x51x6.4x 51 LONG TOP BRACE 2-HSS 102x51x6.4x 51 LONG BOT. BRACE 4-140x 32x10 TOP RAIL SEAT 2-95x32x10 TOP RAIL SEAT 2-140x51x10 BOT. RAIL SEAT 1-95x51x10 BOT. RAIL SEAT 1-6mm THICK CAP EACH POST 1-380x200x13 BASE PLATE (SEE POST TYPE S FOR SIMILAR BASE PLATE COMPONENTS)
B	10	POST TYPE B POST COMPONENTS SIMILAR TO POST TYPE A
C	1	POST TYPE C 1-HSS 127x127x6.4 CENTRAL POST AND 2-HSS 127x51x6.4 SIDE POSTS 2-HSS 127x51x6.4x51 LONG TOP BRACE 2-HSS 127x51x6.4x51 LONG BOT. BRACE 4-140x32x10 TOP RAIL SEAT 2-140x51x10 BOT. RAIL SEAT 1-6mm THICK CAP EACH POST 1-380x200x13 BASE PLATE (SEE POST TYPE S FOR SIMILAR BASE PLATE COMPONENTS)
D	2	POST TYPE D POST COMPONENTS SIMILAR TO POST TYPE C
E	2	POST TYPE E 2-HSS 127x127x6.4 CENTRAL POSTS AND 3-HSS 127x51x6.4 SIDE POSTS 4-HSS 102x51x6.4x51 LONG TOP BRACE 4-HSS 102x51x6.4x51 LONG BOT. BRACE 2-140x32x10 BOT. RAIL SEAT 1-6mm THICK CAP EACH POST 1-650x200x13 BASE PLATE (SEE POST TYPE S FOR SIMILAR BASE PLATE COMPONENTS)

HANDRAIL PANEL SCHEDULE

PANEL TYPE	NO. REQ'D	1	2	3	4	REMARKS
H1	54	2440	140	20 SP. @ 108 = 2160	140	
H2	1	2440	140	20 SP. @ 108 = 2160	140	LIFE PRESERVER PANEL
H3L	1	2440	140	20 SP. @ 108 = 2160	140	EXPANSION PANEL
H3R	1	2440	140	20 SP. @ 108 = 2160	140	EXPANSION PANEL
H4	10	500	165	2 SP. @ 85 = 170	165	
H5	4	2440	280	19 SP. @ 106± = 2020	140	
H6	4	2440	140	19 SP. @ 106± = 2020	280	
H7	1	2440	420	17 SP. @ 102± = 1740	280	
H8	2	2440	280	19 SP. @ 106± = 2020	140	
H9	1	2200±	140	17 SP. @ 105± = 1780	280	CONFIRM LENGTH PRIOR TO FABRICATION
H10	3	2440	140	19 SP. @ 106± = 2020	280	
H11	1	2865±	140	23 SP. @ 106± = 2445	280	CONFIRM LENGTH PRIOR TO FABRICATION
H12	1	2435±	280	19 SP. @ 106± = 2015	140	CONFIRM LENGTH PRIOR TO FABRICATION
H13	1	2550±	140	20 SP. @ 107± = 2130	280	CONFIRM LENGTH PRIOR TO FABRICATION
H14	1	2520±	280	20 SP. @ 105± = 2100	140	CONFIRM LENGTH PRIOR TO FABRICATION
H15	1	2415±	280	19 SP. @ 105± = 1995	140	CONFIRM LENGTH PRIOR TO FABRICATION
H16	1	2590±	280	21 SP. @ 103± = 2170	140	CONFIRM LENGTH PRIOR TO FABRICATION
H17	1	2440	280	19 SP. @ 106± = 2020	140	
H18	1	1950	140	15 SP. @ 102 = 1530	280	CONFIRM LENGTH PRIOR TO FABRICATION
H19	1	2440	280	17 SP. @ 102± = 1740	420	

NOTES:

1. EXTRUDED SHAPES OR DRAWN TUBING FOR RAILS AND POSTS: SHALL CONFORM TO CSA ALUMINUM ALLOY AND TEMPER HA.5 SG 11R-T6 (ASTM B221M-83 ALLOY 6351-T6), OR HA.7 GA 11M-T6 (ASTM B221 M-83 ALLOY 6061-T6).
2. ALUMINUM SHEET, BAR, SUPPORT PIN, ANGLE, AND PLATE SHALL CONFORM TO ASTM B221-M-83 ALLOY 5083, ASTM B209M-83 ALLOY 6061-T6 OR ALLOY 6351-T6.
3. BOLTS AND CAP SCREWS, NYLON LOCK NUTS, AND WASHERS - STAINLESS STEEL CONFORMING TO ASTM A276, TYPE 316.
4. ALUMINUM FILLER ALLOYS FOR WELDED CONSTRUCTION SHALL BE ONE OT THE FOLLOWING: ER4043, ER5183, ER5356, ER5554, ER5556, AND ER5654.
5. THE M.I.G. PROCESS OF WELDING SHALL BE USED.
6. S/S DENOTES STAINLESS STEEL.
7. RAIL POSTS SHALL BE SET VERTICAL OR MAY BE PERPENDICULAR TO CONCRETE BASE IF SLOPE OF BASE IS LESS THAN 1.3%
8. PLACE MINIMUM OF ONE 3mm ALUMINUM SHIM UNDER EACH POST, ADDITIONAL SHIMS MAY BE REQUIRED FOR VERTICAL ALIGNMENT. THE SURFACE SHIMS IN CONTACT WITH CONC. SHALL BE PAINTED WITH 2 COATS OF ALKALI RESISTANT BITUMINOUS PAINT MEETING THE REQUIREMENTS OF CGSB 31-GP-3M.
9. HANDRAIL ANCHOR INSERTS SHALL BE ACROW -RICHMOND TYPE DGR-1 s/s.

NO.	REVISIONS	DATE	BY
3	POSTS CLARIFICATION	02/22/06	N.B.G.
2	ISSUED FOR TENDER	02/02/06	N.B.G.
1	ISSUED FOR CITY REVIEW	12/14/05	N.B.G.

B.M. ELEV.

DESIGNED BY N.B.G.
DRAWN BY N.B.G
CHECKED BY R.A.W.
REVIEWED BY R.A.W
HOR. SCALE / VERTICAL: AS NOTED
DATE DEC. 2005

DILLON CONSULTING

RELEASED FOR CONSTRUCTION
ORIGINAL SIGNED BY B. EBENSPANGER
DATE

ENGINEER'S SEAL: PROVINCE OF MANITOBA, ORIGINAL STAMPED BY R. A. WIEBE 01/31/05, REGISTERED PROFESSIONAL ENGINEER

ENGINEER'S SEAL

CONSULTANT PROJECT NO. 05-5069-1000

Winnipeg

THE CITY OF WINNIPEG
PUBLIC WORKS DEPARTMENT

MARYLAND TWIN BRIDGES REHABILITATION PROJECT
EAST BRIDGE REHABILITATION

ALUMINUM PEDESTRIAN HANDRAIL DETAILS

CITY DRAWING NUMBER B108-06-32
SHEET 32 OF 38