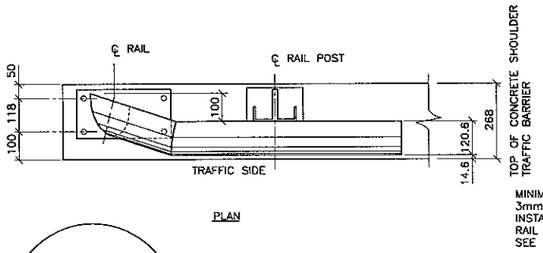

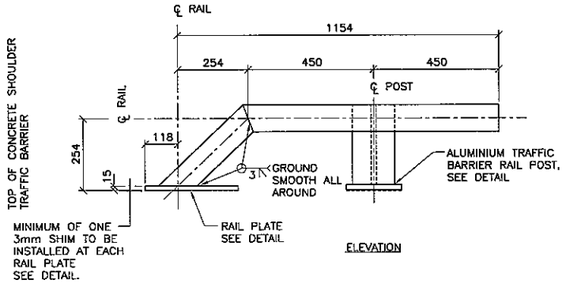

RAIL END SECTION DETAIL

SCALE 1 : 10 2 REQ'D 1 LEFT HAND (AS SHOWN) 1 RIGHT HAND

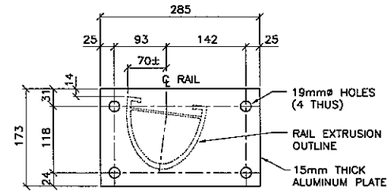

RAIL END PLATE DETAIL

SCALE 1 : 5

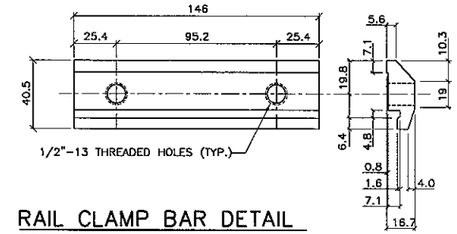

RAIL CLAMP BAR DETAIL

N.T.S.

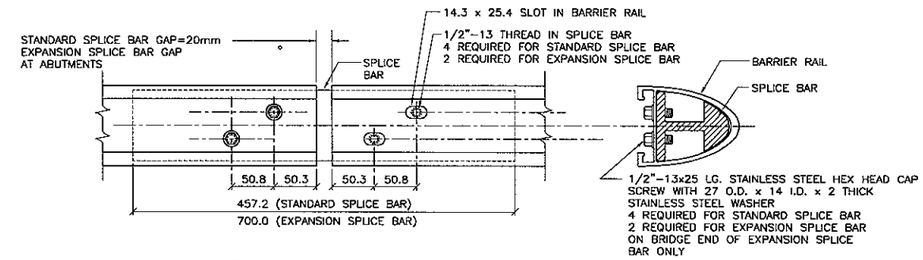

SPLICE BAR TO RAIL ASSEMBLY DETAIL

N.T.S.

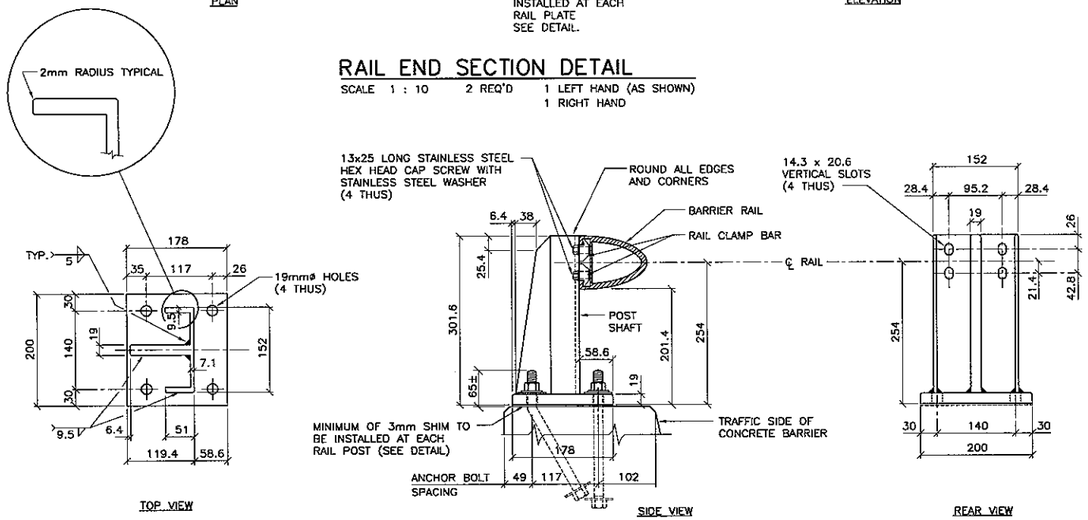

WELDED ALUMINUM TRAFFIC BARRIER RAIL POST DETAIL (BR1)

SCALE 1 : 5

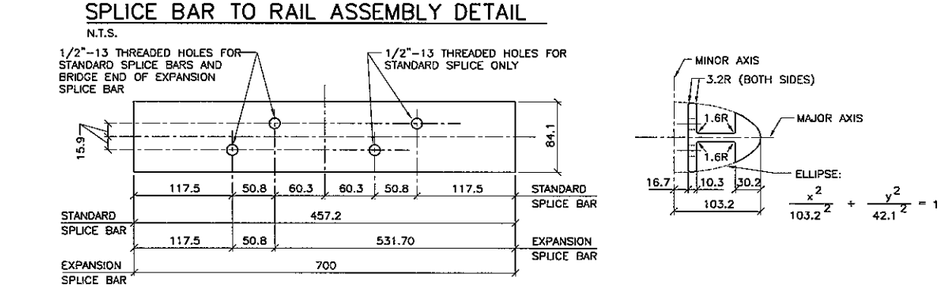

DETAIL OF SPLICE BAR

N.T.S.

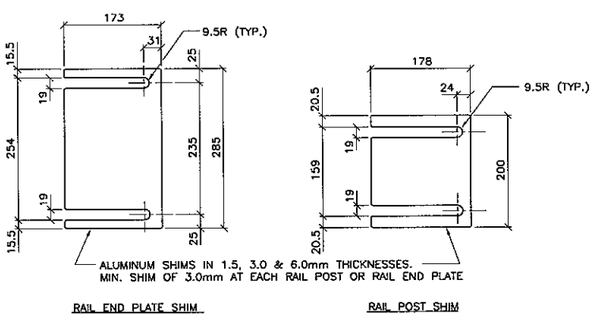

SHIM DETAILS

SCALE 1 : 5

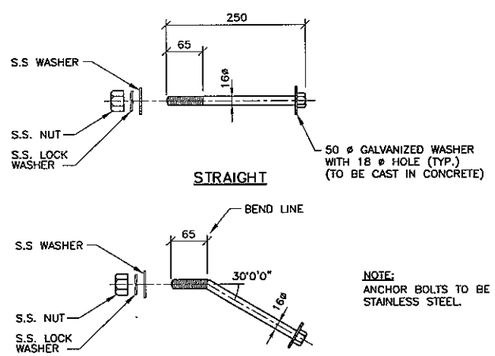

NOTE:
ANCHOR BOLTS TO BE STAINLESS STEEL.

ANCHOR BOLT DETAILS

FOR RAIL POSTS AND RAIL END PLATES
N.T.S.

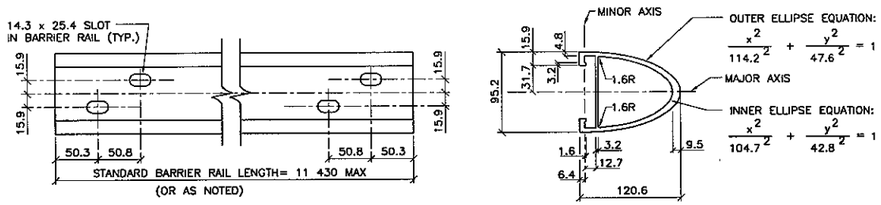

BARRIER RAIL DETAIL

N.T.S.

NOTES:

1. THE 19MM DIA. HOLES (4) IN THE BASE OF THE BARRIER RAIL POSTS AND RAIL PLATES ARE DESIGNED TO ACCOMMODATE 16MM DIA. RAIL POST ANCHOR BOLTS AS DETAILED. SUPPLY WITH EACH ANCHOR BOLT: ONE STAINLESS STEEL PLAIN WASHER, ONE STAINLESS STEEL LOCK WASHER, ONE STAINLESS HEX NUT AND ONE 50MM? GALVANIZED PLATE WASHER.
2. A COMBINATION OF 1.5, 3.0 AND/OR 6.0MM THICK ALUMINUM RAIL POST OR END PLATE SHIMS ARE TO BE USED AS REQUIRED TO SET THE BARRIER RAIL TO THE SPECIFIED HEIGHT. (MINIMUM 3.0MM SHIM REQUIRED AT EACH POST OR PLATE).
3. ALL EDGES AND CORNERS OF THE BARRIER POST PLATES AND EXTRUSIONS SHALL BE ROUNDED IN THE SHOP, TO A SMOOTH 2MM RADIUS TO THE SATISFACTION OF THE CONTRACT ADMINISTRATOR.
4. BOTTOM SURFACE OF SHIM (SURFACE IN CONTACT WITH CONCRETE) IS TO BE PAINTED WITH 2 COATS OF ALKALI RESISTANT BITUMINOUS PAINT, EACH COAT BEING 1MM IN THICKNESS.

SPECIFICATIONS:

1. EXTRUDED ALUMINUM SHAPES AND PLATES SHALL CONFORM TO THE REQUIREMENTS OF A.S.T.M. B221, ALLOY 6061-T6 OR ALLOY 6351-T5 (MIMIMUM ELONGATION 10%)
2. THE STAINLESS STEEL HEX HEAD AND SOCKET HEAD CAP SCREWS SHALL MEET THE REQUIREMENTS OF A.S.T.M. A276, TYPE 430, AND THE DIMENSIONAL REQUIRMENTS OF A.N.S.I. B18.3 .
3. DIMENSIONAL TOLERANCES NOT SHOWN OR IMPLIED ARE INTENDED TO BE THOSE CONSISTENT WITH THE PROPER FUNCTIONING OF THE PART, INCLUDING ITS APPEARANCE, AND ACCEPTED MANUFACTURING PRACTICES.
4. THE POST SHAFT SHALL BE MADE FROM A SINGLE CHANNEL-SHAPE EXTRUSION WELDED TO A PLATE SHAPE. THE POST BASE AND SHAFT SHALL THEN BE WELDED TOGETHER.
5. WELDING SHALL CONFORM TO THE REQUIREMENTS OF CSA STANDARDS S244-1969, WELDED ALUMINUM DESIGN AND WORKMANSHIP AND W47.2-1967, ALUMINUM WELDING QUALIFICATION CODES. ALUMINUM FILLER ALLOY SHALL BE ONE OF THE FOLLOWING: ER4043, ER5183, ER5356, ER5554, ER5556 AND ER5654.
6. THE CONTRACTOR SHALL SUBMIT COMPLETE SHOP DRAWINGS CONSISTING OF THREE PRINTS AND ONE REPRODUCIBLE SEPIA TO THE CONTRACT ADMINISTRATOR FOR APPROVAL PRIOR TO FABRICATION OF ALUMINUM TRAFFIC BARRIER COMPONENTS.
7. ANTI-SEIZE COATING TO BE APPLIED TO ALL THREADED COMPONENTS WHEN BEING ASSEMBLED. I.E. LPS-3 - MANUFACTURED BY HOLT-LLOYD (CANADA) LTD. MARKHAM, ONT. L3R-2Z3.

NO.	REVISIONS	DATE	BY
2	ISSUED FOR TENDER	02/02/06	N.B.G.
1	ISSUED FOR CITY REVIEW	12/14/05	N.B.G.

B.M. ELEV.

DESIGNED BY N/A
DRAWN BY N.B.G.
CHECKED BY R.A.W.
REVIEWED BY R.A.W.
HOR. SCALE / VERTICAL AS NOTED
DATE DEC. 2005

DILLON CONSULTING

RELEASED FOR CONSTRUCTION
DATE 01-31-06

ENGINEER'S SEAL N/A
ENGINEER'S SEAL N/A

CONSULTANT PROJECT NO. 05-5069-1000

THE CITY OF WINNIPEG
PUBLIC WORKS DEPARTMENT

MARYLAND TWIN BRIDGES REHABILITATION PROJECT
EAST BRIDGE REHABILITATION

CITY DRAWING NUMBER B108-06-34
SHEET 34 OF 38

ALUMINUM TRAFFIC BARRIER RAIL STANDARD DETAILS