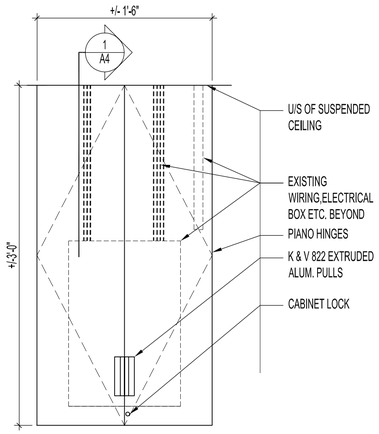

1 A1 A4 ELEVATION 1
SCALE: 1 1/2"=1'-0"

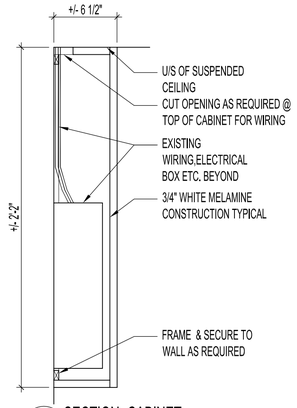

1 A4 A4 SECTION -CABINET
SCALE: 1 1/2"=1'-0"

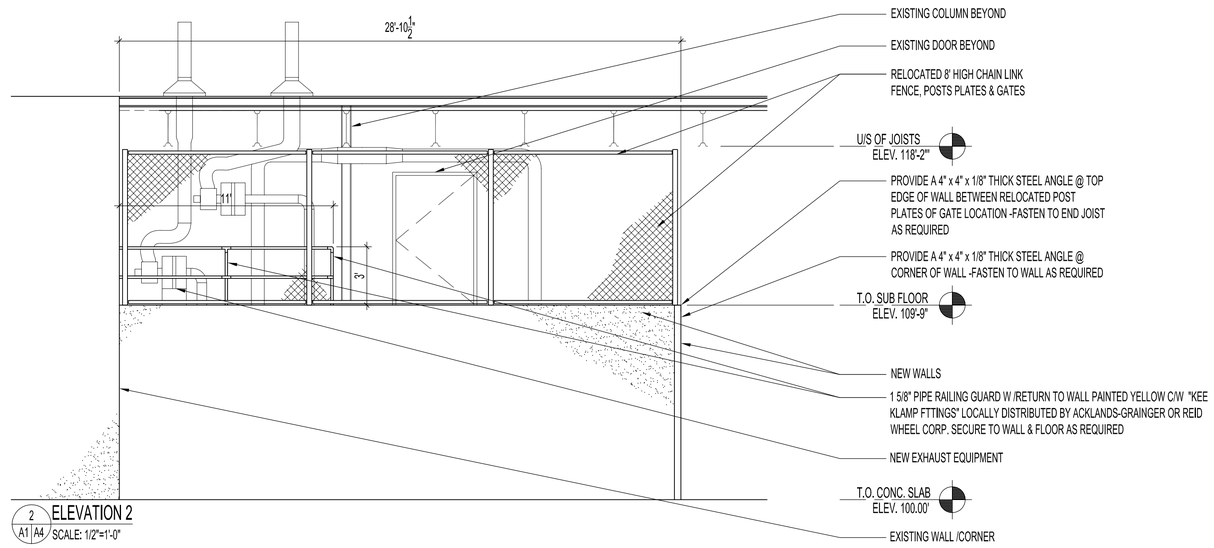

2 A1 A4 ELEVATION 2
SCALE: 1/2"=1'-0"

NOTES :

NOTES:
1. PROVIDE BRACING IN EXISTING WALLS FOR GABLES & METAL SUPPORTS AS REQUIRED.

2. ALL NEW MILLWORK EXTERIORS TO MATCH EXISTING PL. LAM. FINISHES ON SITE UNLESS OTHERWISE NOTED. SEE FINISHES BELOW.

2. ALL HARDWARE TO MATCH EXISTING ON SITE. SEE HARDWARE BELOW FOR TYPES.

3. PROVIDE 4" BLACK RUBBER BASEBOARD AROUND ALL CABINET BASES. SEE ROOM SCHEDULE FOR FINISHES

HARDWARE :

DRAWER SLIDES: BLUM #230 BTM. MOUNT 75 lbs. CAPACITY
DRAWER PULLS: ALUMINIUM 4 1/2" "D" PULLS
LOCKS: K&V 987 NP

INTERIOR & EXTERIOR FINISHES:

-ALL INTERIORS TO BE WHITE MELAMINE.
-ALL EXTERIORS TO HAVE PL. LAM. FINISH ON EXPOSED FACES & EDGES.

COUNTERTOP: FORMICA CHEMICAL RESISTANT LAMINATE "NAVY GRAFIX" #7016-58, CHEMATTA FINISH

CABINET & GABLES FINISHES: FORMICA LAMINATE "SIENNA TERRA" #7216-58 CHEMATTA FINISH

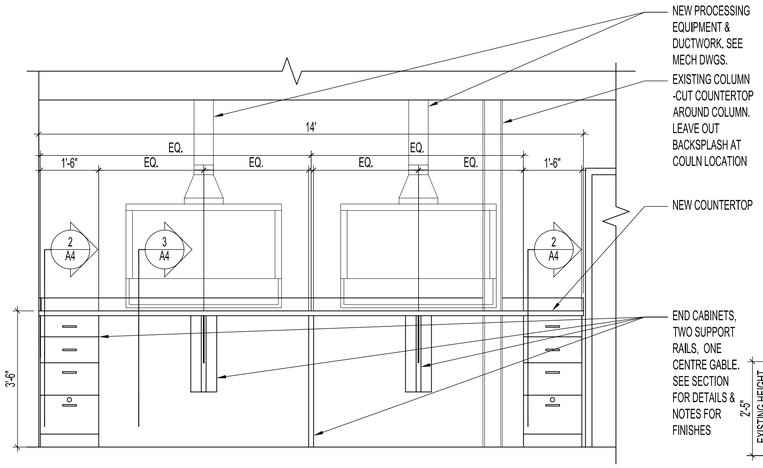

3 A1 A4 ELEVATION 3 (NEW MILLWORK)
SCALE: 1/2"=1'-0"

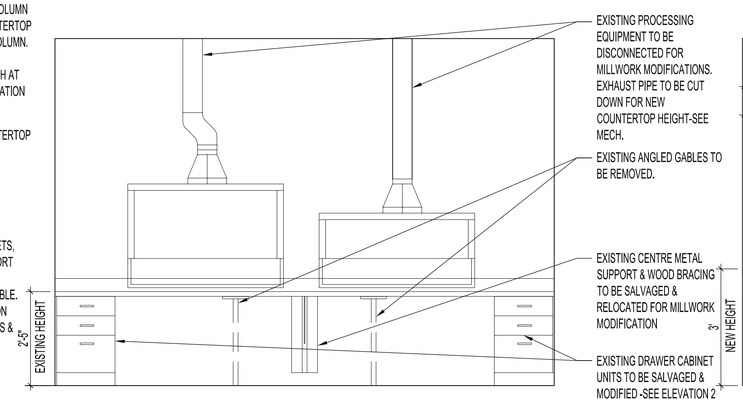

4 A1 A4 ELEVATION 4 (EXISTING MILLWORK)
SCALE: 1/2"=1'-0"

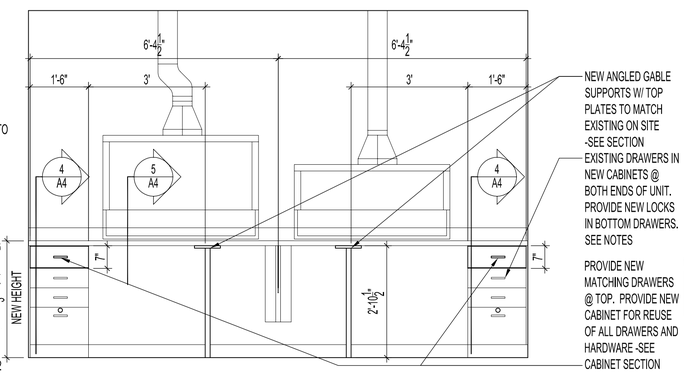

4 A1 A4 ELEVATION 4 (EXISTING MODIFIED MILLWORK)
SCALE: 1/2"=1'-0"

ORIGINAL STAMPED BY: R.K. FOK LI Arch.
DATE: 2006.11.10

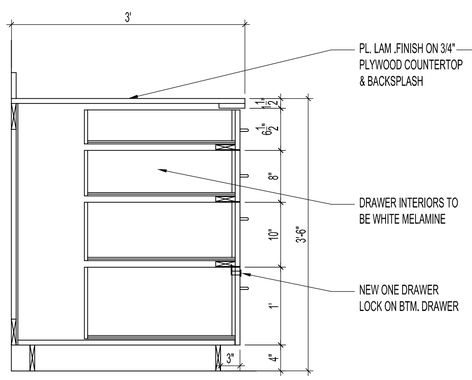

2 A4 DETAIL -NEW CABINET
SCALE: 1" =1'-0"

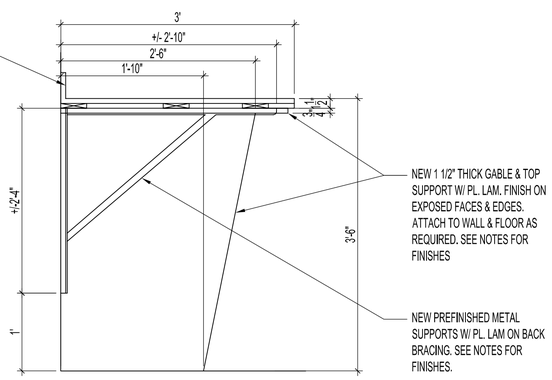

3 A4 DETAIL -NEW CABINET
SCALE: 1" =1'-0"

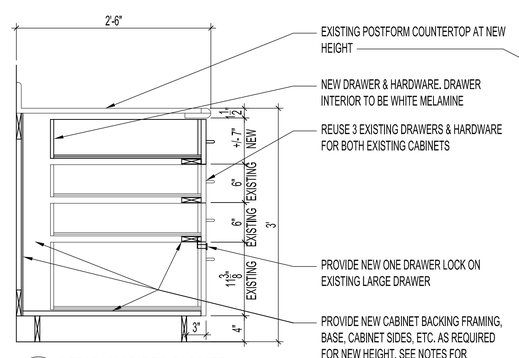

4 A4 DETAIL -MODIFIED CABINET
SCALE: 1" =1'-0"

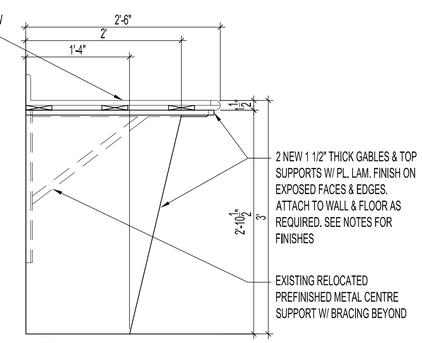

5 A4 DETAIL -MODIFIED CABINET
SCALE: 1" =1'-0"

NO.	REVISION/DESCRIPTION	BY	DATE

SEALS

DRAWN BY	MMK	CHECKED BY	APPROVED
DATE	2006.11.10	USER APPROVAL	

Winnipeg
CITY OF WINNIPEG
PLANNING, PROPERTY & DEVELOPMENT DEPARTMENT
CIVIC ACCOMMODATIONS DIVISION
300 – 65 GARRY ST. R3C 4K4

PROJECT
STORAGE FACILITY
DRUG PROCESSING UNIT
& POLYGRAPH UNIT
850 EMPRESS STREET

SHEET TITLE
INTERIOR ELEVATION
MILLWORK ELEVATIONS
& SECTIONS

SCALE	PROJECT NO.	SHEET NO.
AS SHOWN	2006-054	A4

DRAWING SHEET SIZE: A1 (841mm x 594mm) PLOT 1:1

ADDRESS: 850 EMPRESS STREET | PROJECT No: 2006-054 | DESCRIPTION: INTERIOR ELEVATION, MILLWORK ELEVATIONS & SECTIONS | DATE: 2006.11.10 | FILE NAME: 2006054V0.dwg\A4