Project Name: CITY of WINNIPEG
On-Site Sodium Hypochlorite Generation System

Description of Operation

Contents

1 Introduction

2 Standard Operating Conditions
2.1 Inlet Water Conditions
2.2 Salt Quality
2.3 Water Quality
2.4 Operational Logs

3 Statement of abilities
3.1 Basic Operating Principles
3.2 Byproducts
3.3 Maintenance Requirements

4 System Overview
4.1 On-site Sodium Hypochlorite Generation System
4.2 Sodium Hypochlorite Dosing System

5 Control Component Overview
5.1 Main Control Panel
5.2 Rectifier Panel
5.3 Cell Rack Junction Box
5.4 Cell Rack Intrinsic Device Junction Box
5.5 Standpipe Hydrogen Vent Stack Intrinsic Device Junction
5.6 Tank Hydrogen Vent Stack Intrinsic Device Junction Box
5.7 Reference Drawings

6 Control Process
6.1 Hypochlorite Storage Tanks
6.2 Blower Controls
6.3 Process Startup Stages
6.4 Control Device Description
6.5 Sample Screen Shots and Flow Chart
6.6 System Set Points
6.7 System Operating Ranges
6.8 Alarms Set Points
6.9 Scada Communications

1 INTRODUCTION

The Hypochlorite generation system is designed to produce a .8% Sodium Hypochlorite solution by electrolyzing a brine solution and filling storage tank(s) through a batch process. The stored product is then used for disinfection in a variety of applications.

2 Standard Operating Conditions

2.1. Inlet Water Conditions

Proper system operation and electrode warranty is subject to the end-user meeting the following conditions:

- Inlet Water Temperature: Inlet water temperature must be between 18°C-27°C.
- Inlet Water Pressure: Water Pressure must be minimum 4.83 – 5.86 bar.
- Inlet Water Flow Rate: 265 LPM

2.2 Salt Quality:

Must contain no organic binders, flow control agents or resin cleaning material, and meeting the following specifications:

NaCl:	
- dry basis	96.3% minimum
- wet	93.3% minimum
Calcium Sulfate	0.30% maximum
Magnesium Chloride	0.06% maximum
Calcium Chloride	0.10% maximum
Magnesium Sulfate	0.02% maximum
Insoluble's	0.1% maximum
Moisture (as H2O)	3.0% maximum
Lead	0.0007% maximum
Copper	0.0003% maximum
Iron (as Fe)	0.002% maximum
Fluoride	0.01% maximum

2.3 Water Quality:

Must be free of polymer additives, flocculants, coagulants and antiscalants.
Salinity to electrolytic cell must be maintained above an average of 18,000 ppm Cl

pH	6.5 to 8.5
Hardness [Ca/Mg]	< 10 ppm (at outlet of water softener)
Total Organic content	< 1 ppm
Iron	< 200 ppb
Manganese	< 10 ppb
Nickel	< 5 ppm
Fluoride	< 2 ppm
Copper	< 5 ppb

2.4. Operational Logs

- A monthly log of water hardness at outlet of water softener must be maintained by end-user.
- Operational Log must be maintained detailing maintenance activities and system usage.

3 STATEMENT OF ABILITIES

3.1. Basic Operating Principles

For more than 30 years, on-site generation of sodium hypochlorite has been a key process in water treatment for municipal and industrial applications. The design and operation of the on-site generation of sodium hypochlorite system is straightforward:

- Using softened water, salt (NaCl) is dissolved in a tank to form a concentrated (30%) brine solution.
- The brine solution is reduced in concentration with further softened water to 3%, thereby cutting scaling of cathodes and stretching the intervals for acid cleaning from two to three weeks to as long as four to six months.
- The diluted brine solution is sent through an electrolytic cell that, using DC power from a rectifier, electrolyzes the diluted brine into a 0.8% solution of sodium hypochlorite.
- The 0.8% hypochlorite solution flows into a storage tank.
- Hydrogen is safely vented to the atmosphere.
- Metering pumps delivers the disinfectant to the injection points

Sodium hypochlorite solution is held in storage for 24 to 48 hours (as a backup to the generation process to allow for maintenance and repair) before being dosed directly into the supply using a metering pump. The benefits of this process over chlorine gas and bulk hypochlorite have been well documented and include:

- Eliminated bulk storage of chemicals
- Reduced risk to plant personnel because of drastically reduced hazardous material (HazMat) storage and handling requirements;
- No transportation liabilities
- Reduced threat to public safety
- OSHA and USEPA exempt
- Lower disinfection byproducts
- Consistent solution concentration

A programmable logic controller (PLC) monitors each aspect of the system operation. This thorough monitoring of the system greatly improves the ability to monitor the disinfection process, report on operating parameters, system status and alarm conditions. Controls are telemetry/SCADA-ready and are pre-configured through the Ethernet communication network.

3.2. Byproducts

During the generation of sodium hypochlorite, hydrogen (H_2) is formed as a byproduct. The ClorTec electrolytic cells and the hypochlorite storage tank are designed to safely contain and vent hydrogen from the cell directly into the atmosphere. The dilution and dispersal process is managed by the system's proprietary hydrogen dilution system, which incorporates a blower that provides ventilation of both the sodium hypochlorite storage tank and the cell assembly vent stack.

Hydrogen is a colorless, odorless, non-toxic gas. An asphyxiate that may displace oxygen; hydrogen is flammable and may form mixtures with air that are flammable or explosive. It should be noted that the concentrations at which flammable or explosive mixtures form are much lower than the concentration at which asphyxiation risk is significant.

The design philosophy addresses hydrogen through:

- Natural ventilation to prevent buildup of hydrogen
- Maintaining hydrogen concentrations at less than 25% of the 4% LEL or 1% by volume

3.3. Maintenance Requirements

For optimum performance, routine maintenance of the on-site sodium hypochlorite generating system is required. This includes:

- De-scaling calcium deposits from the electrode
- Replacing the water and brine filter
- Performing annual storage and brine tank inspections
- Replacing the electrode every five to ten years, depending on system use and salt.

4 SYSTEM OVERVIEW

4.1. On-site Sodium Hypochlorite Generation Systems

Qty. Three (3) NSF certified ClorTec™ CT-1500 on-site sodium hypochlorite generation systems each capable of producing 1500-lbs (680Kg) per day chlorine equivalent, for duty/duty/duty operation (Section 2). This system consists of:

Qty. Three (3) Epoxy based powder coated carbon steel racks with brine proportioning systems (venturi eductor), drain valve, acid cleaning by-pass valves, solenoid valves, pressure regulators and flow switches (Section 2).

Qty. Six (6) 750 PPD DSA titanium electrodes with temp/level controls, DC Copper connection points and safety covers, assembled in a clear acrylic housing (Section 2).

Qty. Three (3) Transformer Rectifiers: Air-cooled DC power supply / rectifier, soft start constant current with built in DC volt/amp display, emergency shut-off switch (Section 4). Including:

- Input Circuit Breaker with flex connection and external handle
- Phase loss / sequence protection
- Soft Start circuit on 600Vac input to transformer

Additional relays, sockets and hold down springs for additional circuits

- Door / panel interlock switches

The fan overload protection is in basic unit control

Qty.One (1) Water supply pressure regulating valve (Section 8)

Qty.Four (4) 20 Micron inline filters in clear PVC housing (Section 8)

Qty.Six (6) 25 Micron inline filters in clear PVC housing (Section 8)

Qty. Two (2) Kinetico model CP-416s, dual tank, continuous operation, automatic regenerating water softener (Section 5)

Qty.One (1) Hach Hardness Monitor (Section 12)

Qty. Two (2) 47 ton FRP brine makers, dust bag, digital brine level indicator with ultrasonic level and solenoid valve, salt level indicator, manway, fittings and drain (Section 10)
Because the tanks are installed indoor, insulation is not required.
Salt Fill Line is supplied by others.

we have a standpipe so you do not have to recommend it.

Standpipe hydrogen dilution system including.

- Two 2700 CFM blowers (duty/standby) of FRP construction (Section 7).
- Two check valves and/or Back draft dampers and condensate drip leg assemblies
- One airflow switch
- One differential pressure switch

For large capacity system such as this one, it is recommended to use a Stand Pipe as the primary hydrogen dilution and venting method instead of taking care of the venting primarily at the storage tanks for the following reasons:

A. Safety:

The Stand Pipe is an effective method used to rapidly separate large amounts of hydrogen from the hypochlorite solution produced from the cells. The stand pipe acts as the primary dilution and

Is this what we have done? is our installation safe. If so then remove this sentence.

venting system where about 90% of the total hydrogen produced from the cell is diluted down to a minimum of 25% of the LEL (Lower Explosive Limit) and then vented to atmosphere. The remaining 10% is entrapped in the hypochlorite solution, which flows to the storage tanks. This stand pipe should be installed as close as possible to the cells in order to prevent large amount of hydrogen to travel long distances in the piping system and therefore induce excessive vibration of this piping system and potentially create a safety hazard. In most cases, we recommend installing the stand pipe outside the building because it is usually taller than the building ceiling height. Installing the stand pipe inside the building will require extra penetration through the roof to accommodate it.

the standpipe is in the building

Note: The Stand Pipe to be supplied by others

NO NEED TO SAY THIS

B. FRP Storage Tanks Design

The Fiberglass Reinforced Plastic (FRP) Storage Tanks are designed for atmospheric pressure only. Since only 10% of the Hydrogen is entrapped in the hypochlorite solution and off-gas in the tanks, 300 CFM of dilution air flow suffices. With low air flow in the tanks, the static pressure is greatly reduced and the vent piping is reduced down to 4" instead of 12". This will eliminate space constraints and allow for better storage tanks layout.

we do not have dual speed motors. they are VFD.

The blowers are sized for the maximum system output of 2040 kg (4500-lbs) per day (all three generators operating at maximum capacity) however dual speed motors will be offered to minimize the amount energy used and heated air being exhausted to atmosphere. The motor speed will automatically adjust as more generation units are put into service.

Dilution system calculations and blowers sizing (Section 7) are signed by Mr. Dan Oleksiuk, P.Eng registered in the Province of Manitoba

Qty.Four (4) 117,500 liter vertical FRP sodium hypochlorite storage tanks with ultrasonic level indicator, manways, fittings, and drain (Section 11).

Sodium hypochlorite storage tanks hydrogen dilution system including.

- Eight 300 CFM blowers (4 duty/standby pairs) of FRP construction (Section 7)
- Eight check valves and condensate drip leg assemblies
- Four airflow switches
- Four differential pressure switches

dual speed motors are not shown on control schematics.

Qty. One (1) Commercial sodium hypochlorite dilution panel (Section 6)

Qty. Two (2) Hydrogen gas detectors (Section 12)

~~Note: It is recommended to install four (4) Hydrogen gas detectors.~~

WE NOW HAVE 4 GAS DETECTORS.

4.2. Sodium Hypochlorite Dosing System (Section 13)

Two metering pump stations will be provided, each with one duty and one stand-by.
The Plant PLC will control the operation and the switchover of the pumps via a digital enable signal and a 4-20 ma speed control signal to the duty pump's VFD

Qty. Four (4) Prominent Peristaltic Pumps
Tags: P-J600A, P-J620A, P-J640A, P-J660A

Qty. Four (4) Skids with accessories (one for each pump)

Qty. One (1) VFD's Control Cabinet (Section 14)

5 CONTROL SYSTEM OVERVIEW

5.1 MAIN CONTROL PANEL (Section 15)

The Main Control Panel consists of the following:

- Enclosure – NEMA 4X, 2134 mm H x 1981 mm W x 457 mm D, stainless steel
- Modicon Control System
- Ethernet Communications

The drawings for the Master Control Panel are signed by Mr. R.C.P. Kost, P.Eng registered in the Province of Manitoba

5.2 RECTIFIER PANEL (Section 4)

This panel consists of the rectifier power supply.

- Enclosure – NEMA 12, 1651 mm H X 863 mm W X 863 mmD, painted steel
- Power Requirement, 600vac, 3ph, 60Hz, 197 Amps
- Power Output, 110VDC, 1500Amps

5.3. CELL RACK JUNCTION BOX (Section 3)

Tags: JB-400B, JB-420AB, JB-440B

?

This panel consists of termination points for field

- Enclosure- NEMA 4, 150 mm x 150 mm x 100 mm, painted steel

5.4 Cell Rack Intrinsic Device Junction Box (Section 3)

Tags: JB-400A, JB-420A, JB-440A

This panel consists of the intrinsic barriers for the cell safety devices

- Enclosure- NEMA 4, 150 mm x 150 mm x 100 mm, painted steel
- Two (2) Dual Channel Intrinsically Safe Barriers

5.5 Standpipe Hydrogen Vent Stack Intrinsic Device Junction Box (Section 3)

Tag: JB-450A

This panel consists of the intrinsic barriers for the standpipe hydrogen vent stack safety devices.

- Enclosure- NEMA 4, 150 mm x 150 mm x 100 mm, painted steel
- Two (2) Dual Channel Intrinsically Safe Barriers

5.6 Tank Hydrogen Vent Stack Intrinsic Device Junction Box (Section 3)

Tags: JB-500A, JB-520A, JB-540A, JB-560A

This panel consists of the intrinsic barriers for the tank hydrogen vent stack safety devices.

- Enclosure- NEMA 4, 150 mm x 150 mm x 100 mm, painted steel
- Two (2) Dual Channel Intrinsically Safe Barriers

5.7 Reference Drawings

MASTER CONTROL PANEL

Dwg#	Equipment	Description
M5472-01	Master Control Panel	Layout
M5472-02	Master Control Panel	System Architecture
M5472-03	Master Control Panel	Control Wiring Diagram
M5472-04	Master Control Panel	Power Wiring Diagram
M5472-05	Water Hardness Monitor ATJ001B	Raw Water Supply
M5472-06	Flow Meter FIT J001A	Raw Water Supply
M5472-07	Brine Level Control LC J100A	Brine Tank TK-J100A
M5472-08	Salt Level Sensor LIT J100 B	Brine Tank TK-J100A
M5472-09	Brine High Level Alarm LS J100A (H)	Brine Tank TK-J100A
M5472-10	Brine Level Control LC J200A	Brine Tank TK-J200A
M5472-11	Salt Level Sensor LIT J200 B	Brine Tank TK-J200A
M5472-12	Brine High Level Alarm LS J200A (H)	Brine Tank TK-J200A
M5472-13	Temperature Monitor TIT J003A	Raw Water Supply to Cell Rack
M5472-14	Sodium Hypo Generator EL-J400	Power Rectifier Control RT-J400
M5472-15	Sodium Hypo Generator EL-J420	Power Rectifier Control RT-J420
M5472-16	Sodium Hypo Generator EL-J440	Power Rectifier Control RT-J440
M5472-17	Hydrogen Detector AIT J450A	Cells Area
M5472-18	Hydrogen Detector AIT J450B	Cells Area
M5472-19	Hydrogen Detector GIT J550A	Sodium Hypo Tanks Area
M5472-20	Hydrogen Detector GIT J550B	Sodium Hypo Tanks Area
M5472-21	Sodium Hypo Generator EL-J400	Control Junction Box JB-J400B
M5472-22	Sodium Hypo Generator EL-J400	Intrinsic Safe Relay Box JB-J400A
M5472-23	Sodium Hypo Generator EL-J420	Control Junction Box JB-J420B
M5472-24	Sodium Hypo Generator EL-J420	Intrinsic Safe Relay Box JB-J420A
M5472-25	Sodium Hypo Generator EL-J440	Control Junction Box JB-J440B
M5472-26	Sodium Hypo Generator EL-J440	Intrinsic Safe Relay Box JB-J440A
M5472-27	Hydrogen Dilution Stack Blowers	Intrinsic Safe Relay Box JB-J450A
M5472-28	Hydrogen Dilution Stack Blowers	Blower BLR J450A
M5472-29	Hydrogen Dilution Stack Blowers	Blower BLR J450B
M5472-30	Sodium Hypo Solution Tank TK J500A	Intrinsic Safe Relay Box JB-J500A
M5472-31	Sodium Hypo Solution Tank TK J500A	Blower BLR J500A
M5472-32	Sodium Hypo Solution Tank TK J500A	Blower BLR J500B
M5472-33	Sodium Hypo Solution Tank TK J520A	Intrinsic Safe Relay Box JB-J520A
M5472-34	Sodium Hypo Solution Tank TK J520A	Blower BLR J520A
M5472-35	Sodium Hypo Solution Tank TK J520A	Blower BLR J520B
M5472-36	Sodium Hypo Solution Tank TK J540A	Intrinsic Safe Relay Box JB-J540A
M5472-37	Sodium Hypo Solution Tank TK J540A	Blower BLR J540A
M5472-38	Sodium Hypo Solution Tank TK J540A	Blower BLR J540B
M5472-39	Sodium Hypo Solution Tank TK J560A	Intrinsic Safe Relay Box JB-J560A
M5472-40	Sodium Hypo Solution Tank TK J560A	Blower BLR J560A
M5472-41	Sodium Hypo Solution Tank TK J560A	Blower BLR J560B
M5472-42	Hydrogen High Level Alarms	Alarm Beacons

6 PROCESS CONTROL

SYSTEM PROCESS OVERVIEW

The Sodium Hypochlorite Generation system process consists of nine (9) states. These states are: Disabled, Stand-by, Stages 1-4, Running, Restarting, and Shutdown. The operator interface will contain a menu to display the current state of the Generator.

Disabled: The control panel operator interface will provide a selector switch to select whether the system be Enabled or Disabled. The Enable/Disable selector switch is used to prevent or allow the Hypochlorite Generator from operating. When Enabled the generator status will display one of the remaining nine (9) states.

When the System is Disabled:

The Sodium Hypochlorite Generation system does not run under any circumstances. Alarms pertaining to the Generator are not active at this time. The only alarms monitored and displayed at this time are for the in service Sodium Hypochlorite Tanks.

When the System is Enabled:

SEE COMMENTS ON SEPERATE SHEET

The Sodium Hypochlorite Generation system process will be initiated by the selected Hypochlorite storage tank (either tank TK-J500A, TK-J520A, TK-J540A, or TK-J560A) or operator intervention. While controlled by the selected Hypochlorite storage tank level the Generator will maintain a desired Hypochlorite storage tank level without operator intervention. This automatic batch mode will start and stop the generator by way of Hypochlorite storage tank level Start and Stop Set Points. While under operator intervention there are three situations of Hypochlorite storage tank level which will affect the operation and usage of the Start, Stop, and Enable/Disable buttons.

The first Hypochlorite storage tank level situation occurs when the selected Hypochlorite tank level is below the Generator Start Set Point. The generator will be called into Stage 1 (description to follow) upon the expiration of a ten second (10s) timer. The timer is enabled by the Hypochlorite storage tank level being below the Generator Start Set Point. The Start button is active and will only supersede the Hypochlorite storage tank level timer. The Stop button will reset the process to Stage 1.

The second Hypochlorite tank level situation occurs when the selected Hypochlorite storage tank level is between the Generator Start and Stop Set Points. The Start button is active and will initiate Stage 1 if the Generator is in Standby (description to follow). The Stop button is active and will place the unit back into Standby mode.

The third Hypochlorite storage tank level situation occurs when the selected Hypochlorite storage tank level is above the Generator Stop Set Point and below the Hypochlorite storage Tank High Alarm Set Point. The Start button is active and will initiate Stage 1 if the Generator is in Standby. The system will then run for 3 minutes and then go back into Standby mode. The Stop button is active and will place the unit into Standby mode.

Stand-by: This state occurs when the generator is Enabled but is not operating. The selected Hypochlorite Storage tank level is between the Start and Stop Set Points.

Stages 1-4: These are start up interlock states. When the generator has received the request to start from the selected Hypochlorite storage tank (description to follow) Stage 1 will be initiated. Upon meeting the interlocks for Stage 1 the system will proceed to Stage 2 and continue verifying interlocks proceeding through the remaining stages until the system enters the state of Running (description to follow). Stages 1-4 and Running will be discussed in detail in section 6.1.

Running: The generator has completed interlock Stages 1-4 and is producing sodium hypochlorite.

Restarting: If at any time while the Generator is starting up or running and an alarm or fault condition is experienced the unit will turn off and attempt to restart for a total of (any combination) four (4) alarm/faults. There is a time delay of sixty seconds (60s) between the alarm occurrence and the alarm being cleared. At the expiration of the sixty second (60s) time delay the alarm is cleared and the system will proceed to Stage 1 or Standby. The alarm/fault counter is cleared by the Reset Button on the operator interface or by the selected Hypochlorite storage tank Stop Set Point being reached.

Shutdown: Upon the fourth (4th) alarm the unit will go into shutdown mode and will remain until reset by an operator.

6.1. Hypochlorite Storage Tank

The control panel operator interface will provide a selection menu to select which tank (TK-J500A, TK-J520A, TK-J540A, or TK-J560A) is to control the process Start/Stop of each generator, lead tank. Each generator will have its own tank Start and Stop tank level Set Points that will be compared to the level of the lead tank. When the level in the lead tank less than or equal to the individual generators start level set point, a start request or a call for Stage 1 will be given and the generator will transition from Stand-by to Stage 1.

Tank Valving:

SEE COMMENTS ON SEPERATE SHEETS

Tank valving will require the operator to select through the operator interface the position of the tank inlet and outlet valves. For each tank a valve position selector switch will be displayed on the operator interface to make the selection for the opened/closed position of the inlet and outlet valves. If either the inlet or outlet valves are in the open position the tank is considered in service. If the inlet and outlet valve on a tank are both closed then the tank will be considered out of service. There are many configurations in which the tanks can be valved; here are a few sample tank conditions. First, under normal operation all four tanks could be filled and drained at the same time, meaning that the inlet and outlet valve would all be in the open position. Next, if it was necessary to perform maintenance on tank TK-J540A and the tank was completely full, tank TK-J540A would have its inlet valve in the closed position and tanks TK-J500A, TK-J520A, and TK-J560A would have the outlet valves in the closed position. It is the responsibility of the operator to properly valve the system according to the desired configuration. The control panel plc will monitor that the inlet valve position, of the tank lead tank, is in the open position before the generator is allowed to move into Stage 1.

Tank alarms:

Tank alarms will be provide for all four Hypochlorite storage tanks. There will be a Tank Low Level and Tank High Level alarm for each. A Tank Low Level alarm will display on the operator interface and send the alarm over SCADA. A Tank Low Level alarm does not affect the operation of the Generator. A Tank High Level alarm will display on the operator interface, send an alarm over SCADA, and shutdown the Generator if it is operating. The Generator will not be allowed to operate under any condition while a Tank High Level alarm is active. A tanks valving

configuration will determine whether its alarms are active or not. When the tank is in service the alarms are active and when the tank is out of service the alarms will not be active.

6.2. Blower Controls

The control panel operator interface will provide a blower control screen that will contain the selector switches for choosing whether a blower (BLR-J450A, BLR-J450B, BLR-J500A, BLR-J400B, BLR-J520A, BLR-J520B, BLR-J540A, BLR-J540B, BLR-J560A, or BLR-J560B) is in Hand, Off, or Auto. The blowers have been set up into five (5) pairs of Duty/Standby for each of the following:

Stand Pipe (STP-J450A)
Duty/Standby Blowers BLR-J450A & BLR-J450B

Sodium Hypochlorite Solution Tank (TK-J500A)
Duty/Standby Blowers BLR-J500A & BLR-J500B

Sodium Hypochlorite Solution Tank (TK-J520A)
Duty/Standby Blowers BLR-J520A & BLR-J520B

Sodium Hypochlorite Solution Tank (TK-J540A)
Duty/Standby Blowers BLR-J540A & BLR-J540B

Sodium Hypochlorite Solution Tank (TK-J560A)
Duty/Standby Blowers BLR-J560A & BLR-J560B

Each pair is designed (under normal conditions) to operate will both blowers in Auto. With each blower in Auto one of the blowers will be designated as Duty and the other as Standby. The duty/standby designation will switch upon blower alarm and or hours of operation. In the event that only one of the blowers is in Auto the blowers will not switch duty/standby designation upon a blower alarm or hours of operation.

The blowers will be called on at the beginning of Stage 1. The Stand Pipe (STP-J450A) blower pair will always be called on if any Generator is in Stage 1. The remaining four (4) Sodium Hypochlorite Solution Tank blower pairs will be called on if the associated tank is in service and any Generator is in Stage 1.

WHAT HAPPENS IF BOTH BLOWERS IN A PAIR ARE UNAVAILABLE..?

GENERATOR

6.3. Process Stages (Generator EL-J400 will be used as an example for following stage descriptions but can be applied to Generators EL-J420 and EL-J440)

Stage 1

Once stage 1 is requested the system will turn on the blowers to the tanks that are in service and the stand pipe blower. The system will monitor the following alarms specific to each Generator:

Cell High Temperature- TS-J400B & TS-J400C
Product Ball Valve Limit Switch- ZS-J400B
Hydrogen Vent Ball Valve Limit Switch- ZS-J400A
Rupture Disk- PS-J400B
Cell Inlet Pressure Switch- PS-J400A
Pressure Relief Valve Flow Switch- FS-J400C
Hydrogen Detector- AI-J450A
Hydrogen Detector- AI-J550A

IS IT A GOOD IDEA TO TRY AND RE-START IF THE RUPTURE DISC ALARM IS ACTIVE? OR WE HAVE A GAS ALARM?

WHAT STATE DO THESE INTERLOCKS HAVE TO BE IN TO GO TO STAGE 1

If any of the alarms listed above occur during Stage 1 or any later state, the Generator will shutdown and attempt a restart when in alarm. The following blower interlocks must be met before the Generator can proceed to Stage 2. They are:

Stand Pipe (STP-J450A) Air Flow Switch- FS-J450A
Stand Pipe (STP-J450A) Pressure Differential Switch- PS-J450A
Sodium Hypochlorite Solution Tank (TK-J500A) Air Flow Switch- FS-J500A
Sodium Hypochlorite Solution Tank (TK-J500A) Pressure Differential Switch- PS-J500A
Sodium Hypochlorite Solution Tank (TK-J520A) Air Flow Switch- FS-J520A
Sodium Hypochlorite Solution Tank (TK-J520A) Pressure Differential Switch- PS-J520A
Sodium Hypochlorite Solution Tank (TK-J540A) Air Flow Switch- FS-J540A
Sodium Hypochlorite Solution Tank (TK-J540A) Pressure Differential Switch- PS-J540A
Sodium Hypochlorite Solution Tank (TK-J560A) Air Flow Switch- FS-J560A
Sodium Hypochlorite Solution Tank (TK-J560A) Pressure Differential Switch- PS-J560A

If the blower interlocks have been met for 15 seconds then the system will go to Stage 2. If the blower interlocks are not met within 60 seconds the unit will fault on a Stage 1 Fault.

WHAT IF TANKS ARE OUT OF SERVICE!

Stage 2

does it shutdown or restart?

Once Stage 2 is reached the water solenoid valve SOL-J400A opens allowing water and brine to mix and fill the cells. The blower interlocks from Stage 1 have now become individual active alarms and will shutdown the Generator and attempt a restart when in alarm. The following cell level interlocks must be met before the Generator can proceed to Stage 3. They are:

Cell Level Switch- LS-J400A
Cell Level Switch- LS-J400B

— what state do they have to be in.

If the cell level interlock has been met for 15 seconds the system will advance to Stage 3. If the cell level interlock is not achieved within 180 seconds the unit will fault on Stage 2 Fault. — is this a shutdown.

Stage 3

Once Stage 3 is reached the system will verify that each cell EL-J400A and EL-J400B have proper flow. The cell level interlocks from Stage 2 have now become individual active alarms and will shutdown the Generator and attempt a restart when in alarm. The following cell flow interlocks must be met before the Generator can proceed to Stage 4. The interlock is a limit test on cell flows FT-J400A and FT-J400B Low/High. They are:

Cell Flow Low Flow- FT-J400A
Cell Flow High Flow- FT-J400A
Cell Flow Low Flow- FT-J400B
Cell Flow High Flow- FT-J400B

which is what?

IS IT shutdown or can a restart take place?

If the cell flows are within operating range (cell flow interlocks have been met) for 15 seconds the system will advance to Stage 4. If proper cell flow is not achieved within 60 seconds the unit will fault on Stage 3 Fault.

Stage 4

Once Stage 4 is reached rectifier RT-J400 is started. The flow interlocks from Stage 3 have now become individual active alarms and will shutdown the Generator and attempt a restart when in alarm. In addition to the four (4) cell flow alarms there will be a Low Low Flow alarm for both FT-J400A and FT-J400B that will function in the same manor as the above listed. The following

manner.

THIS IS VERY CONFUSING. ARE YOU SAYING THAT THIS LOW FLOW IS DIFFERENT TO THIS LOW FLOW.

rectifier interlocks must be met before the Generator can proceed to Running. Part of the interlock is a limit test on the rectifiers current and voltage output. The rectifier interlocks are:

Rectifier Fault- RT-J400
Rectifier Low Current- RT-J400
Rectifier High Current- RT-J400
Rectifier Low Voltage- RT-J400
Rectifier High Voltage- RT-J400

If the rectifiers current and voltage are within operating range and there is not rectifier fault (rectifier interlocks have been met) for 5 seconds, then the system will advance to Running.
If the rectifier interlocks are not achieved with 120 seconds the unit will fault on Stage 4 Fault.

Running — IS THIS RECTIFIER RUNNING?

Once Running is reached the system is fully operational and producing sodium hypochlorite. The rectifier interlocks from Stage 4 have now become active alarms and will shutdown the Generator and attempt a restart when in alarm.

6.4. Control Device Description

This section describes the devices used in the control process.

Cell Level Switch (Device Symbol LS)

This is a digital input to the PLC and is used as a safety permissive. The purpose of this switch is to assure there is a sufficient level of brine solution to run the system. The level switch is mounted on top of each cell with the float extending into the cell casing just above the electrodes. As the Brine solution fills the cell the float raises closing electrical contacts. The cell level switch is used as an interlock permissive allowing the system to proceed to Stage 3 when the cell level switch is closed, input =1. Note: If there are multiple cells, the level switch from each cell is wired in series with each subsequent level switch. The PLC will receive only one input for Cell Level.

IF THIS IS CORRECT WHY ARE 2 INPUTS SHOWN ON P&ID.

Cell Temperature Switch (Device Symbol TS)

This is a digital input to the PLC and is a safety permissive. The purpose of this switch is shut down the system process if the solution ever reaches temperatures above 130°F (55°C). The temperature switch is used as an alarm allowing the system to proceed through for Stage 1 if the switch remains normally closed, input =1. Note: If there are multiple cells, the temperature switch from each cell is wired in series with each subsequent temperature switch. The PLC, will receive only one input for Cell Temperature.

to

Solenoid Valve (Device Symbol SOL)

open

This device is controlled by a digital output from the PLC and is used to allow water flow through the cells and is enabled at the beginning of Stage 2. The solenoid valve remains on throughout the remaining stages and is turned off when the process is stopped. The valve is also opened for unit maintenance. Acid Wash mode. The operator interface will provide a maintenance screen with a push button to enable or disable the Acid Wash. This input to the plc will only be active when the Generator is Disabled. With the Generator Disabled and when the Acid Wash button is depressed the solenoid is to be enabled until the cell level switch (LS) input is received. If the cell

During

operation

PLC

PLC

level switch (LS) input is true at the initial Acid Wash enable the solenoid valve is to disabled. If at any time the Generator is enabled while the solenoid valve is opened under Acid Wash mode, the solenoid is to be disabled. The description above covers the manner in which the ~~plc~~ and operator interface will control the solenoid valve under the two circumstances. The description of Acid Wash mode does not cover the procedure for acid wash maintenance. It is the responsibility of the operator to refer to the O&M manual for the proper procedure for acid washing the Generator safely.

Ball Valve Limit Switch (Device Symbol ZS)

This is a digital input to the PLC and is a safety permissive. The purpose of this limit switch is to shutdown the system process if the valve is in the closed position. The ball valve limit switch is used as an alarm allowing the system to proceed to Stage 2 when the valve is in the open position (NOHC), input =1.

this contradicts earlier paragraphs where you say ~~the~~ restarts are attempted.

Pressure Switch (Device Symbol PS)

This is a digital input to the PLC and is a safety permissive. The purpose of the pressure switch is to shutdown the system process if either the inlet or outlet pressure is too great. The pressure switch is used as an alarm allowing the system to proceed to Stage 2 if the pressure switch remains normally closed, input =1.

Flow Meter (Device Symbol FT)

These signals are analog inputs (4-20 ma) to the PLC and are used to monitor flow. The purpose of the flow meters is to monitor that the water flow to the cell is sufficient to produce the correct product strength. A secondary role of the flow meters is as a safety permissive. Should the flows become too low or too great the system is shutdown to prevent damage to the electrodes. The flow meters are used as an interlock permissive allowing the system to proceed to Stage 4 when the flows are within range, high and low.

Pressure Relief Valve Flow Switch (Device Symbol FS)

This is a digital input to the PLC and is used as a safety permissive. The purpose of this flow switch is to shutdown the system in the event flow is detected downstream of the pressure relief valve. The pressure relief valve flow switch is used as an alarm allowing the system to proceed to Stage 2 if the pressure relief valve flow switch remains normally closed, input =1.

Hydrogen Detector (Device Symbol AI)

These signals are analog inputs (4-20mA) to the PLC and are used as a safety permissive
The purpose of the hydrogen detector is to shutdown the system in the event that hydrogen level exceeds 50 percent of the LEL. The unit will remain shutdown as long as the hydrogen level remains above 25 percent of the LEL

Air Flow Switch (Device Symbol FS)

These are digital inputs to the PLC monitored when the blowers are running and are used as a safety permissive. The purpose of the airflow switches is to shutdown the system process if there

is no positive airflow moving through the standpipe or tank hydrogen vent. The air flow switches are used as an interlock permissive allowing the system to proceed to Stage 2 when the air flow switches are in the closed position, input =1.

Differential Pressure Switch (Device Symbol PS)

These are digital inputs to the PLC and are used as a safety permissive. The purpose of the differential pressure switches is to shutdown the system process if there is not positive air pressure, greater than atmospheric present in the blower piping, standpipe hydrogen vent, or the tank hydrogen vent. The differential pressure switches are used as an interlock permissive allowing the system to proceed to Stage 2 when the differential pressure switches are in the closed position, input =1.

Blower (Device Symbol BLR)

The blowers are controlled by digital outputs from the PLC. A short description and designation of each blower is given in section 6.2. The following will discuss the blower as an individual unit in further detail. With the blower in Auto, the blower is enabled at the beginning of Stage 1 and will remain on for five (5) minutes after the process has stopped. It does not matter how the process stops whether by tank level, alarm/fault condition, or by the Stop button on the HMI the blower will remain on for five (5) minutes to clear the tanks of any remaining hydrogen. If the Generator state is in Stage 2 or above and the blower is placed into the Hand or Off position, the process will shutdown and alarm. If an air flow switch or differential pressure switch alarm is present specific to that blower the process will shutdown and the blower enable will remain on. Upon completing the Restart the blower enable will be removed and the Standby blower will be enabled. In Hand, the blower is enabled and will run until put into Auto or Off. In Off the blower will not be enabled.

Hypochlorite Level Sensor (Device Symbol LT)

This signal is an analog input (4-20mA) to the PLC and is used to monitor the hypochlorite level in the tank. The purpose of the Level Sensor is to monitor the tank level so that the generator can maintain adequate storage for chlorine demand. There are four (4) set points associated with the Level Sensor. The first two are the Tank Start and Stop set points, which control the generator production. The second two are Tank High Level and Tank Low Level that send alarm signals to shutdown the process or send an alarm to the SCADA.

current connected

Rectifier (Device Symbol RT)

This device is enabled by a digital output and controlled by an analog (4-20mA) signal from the PLC. The purpose of this device is to deliver a DC electrical ~~charge~~ to the electrolytic cells to produce the Sodium Hypochlorite. The rectifier is enabled at the beginning of Stage 4. There are five (5) interlock permissive associated with the rectifier which allows the system to proceed to Running status. The Voltage is monitored to produce a High and Low Voltage interlock. The Current is monitored to produce a High and Low Current interlock. The final interlock associated with the rectifier is a rectifier fault; this fault is a combination of safety devices ran in series in the Rectifier. If the Rectifier does not reach proper current or voltage or has a Rectifier Fault in the give time the unit will not proceed to Running and will fault on a Stage 4 fault. Once the rectifier is enabled in the beginning of Stage 4 the current is monitored and slowly increased (by way of 4-20mA signal) to achieve the desired Current Set Point.

6.5. Sample Screen Shots and Flow Chart

Note: Sample screen shots only. Final screen shots can be added at completion of project.

Main Screen

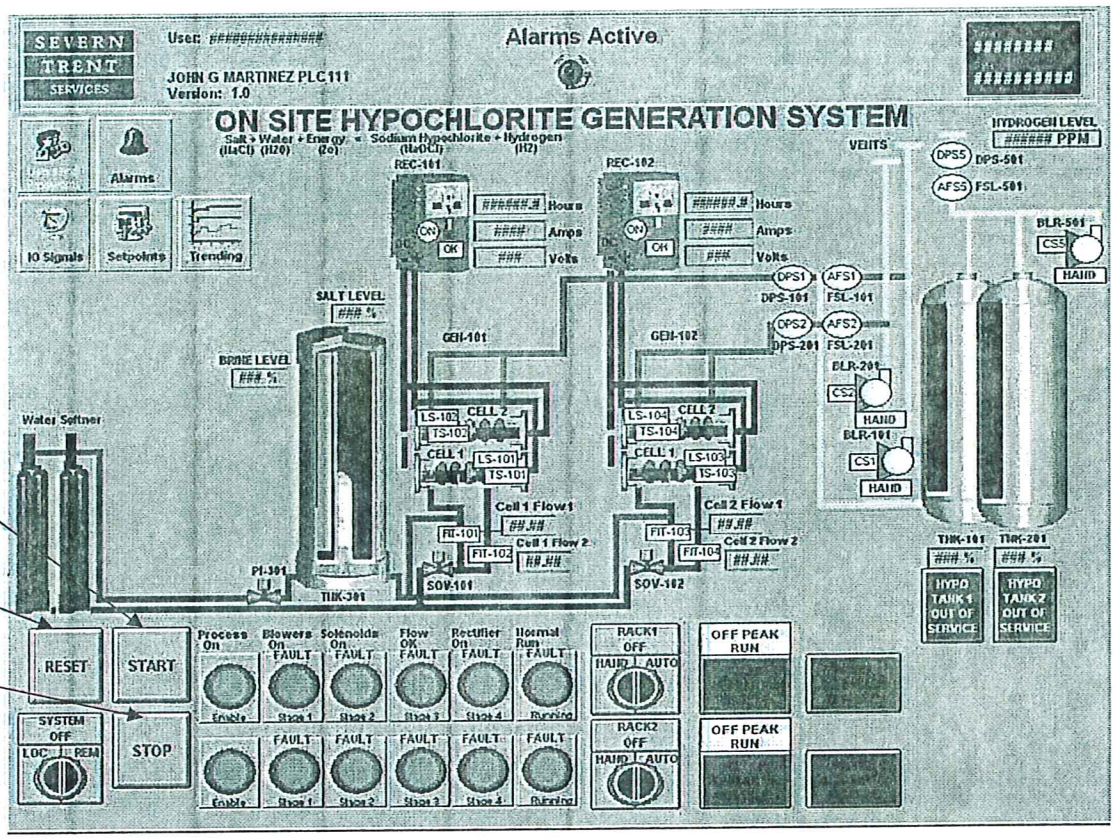

Process start button

Reset alarm button

Process stop button

Alarm Screen

Alarm

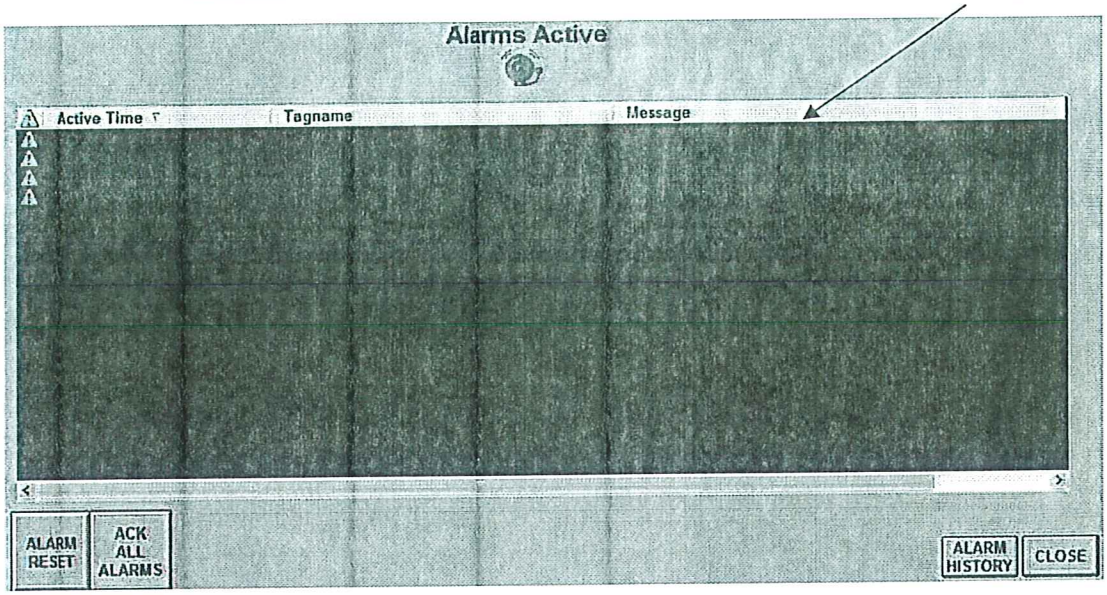

Configuration Screen

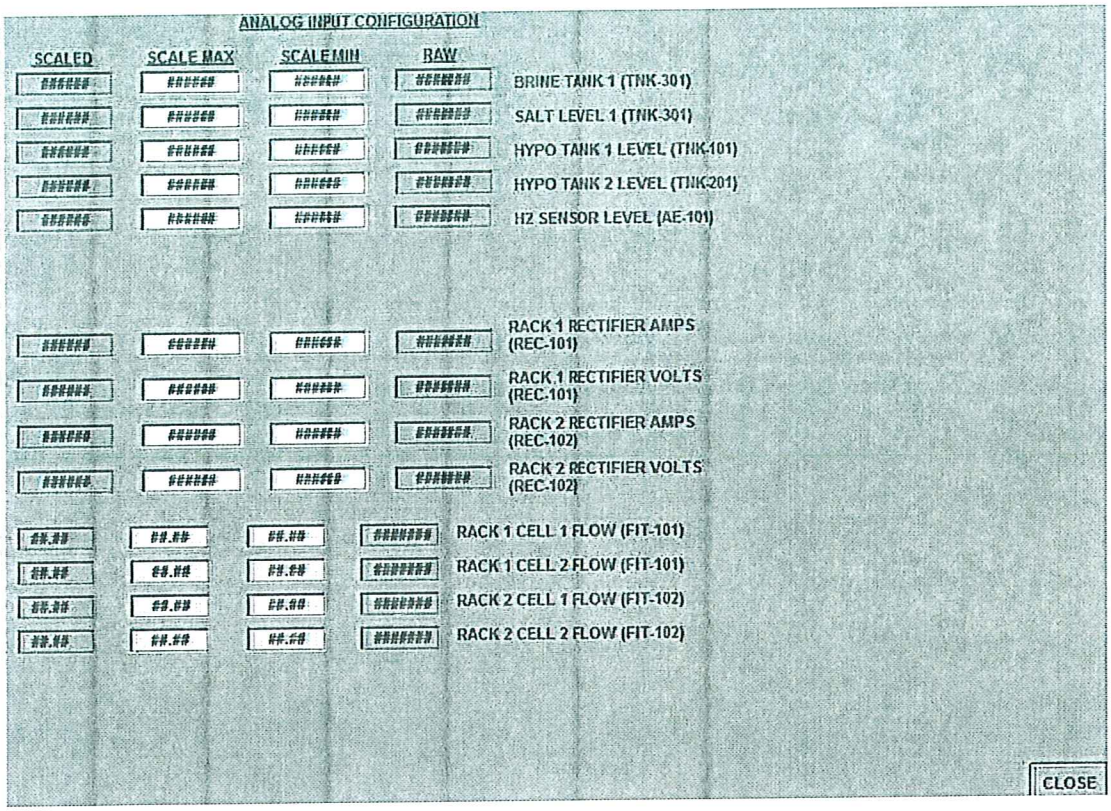

which disconnect switch

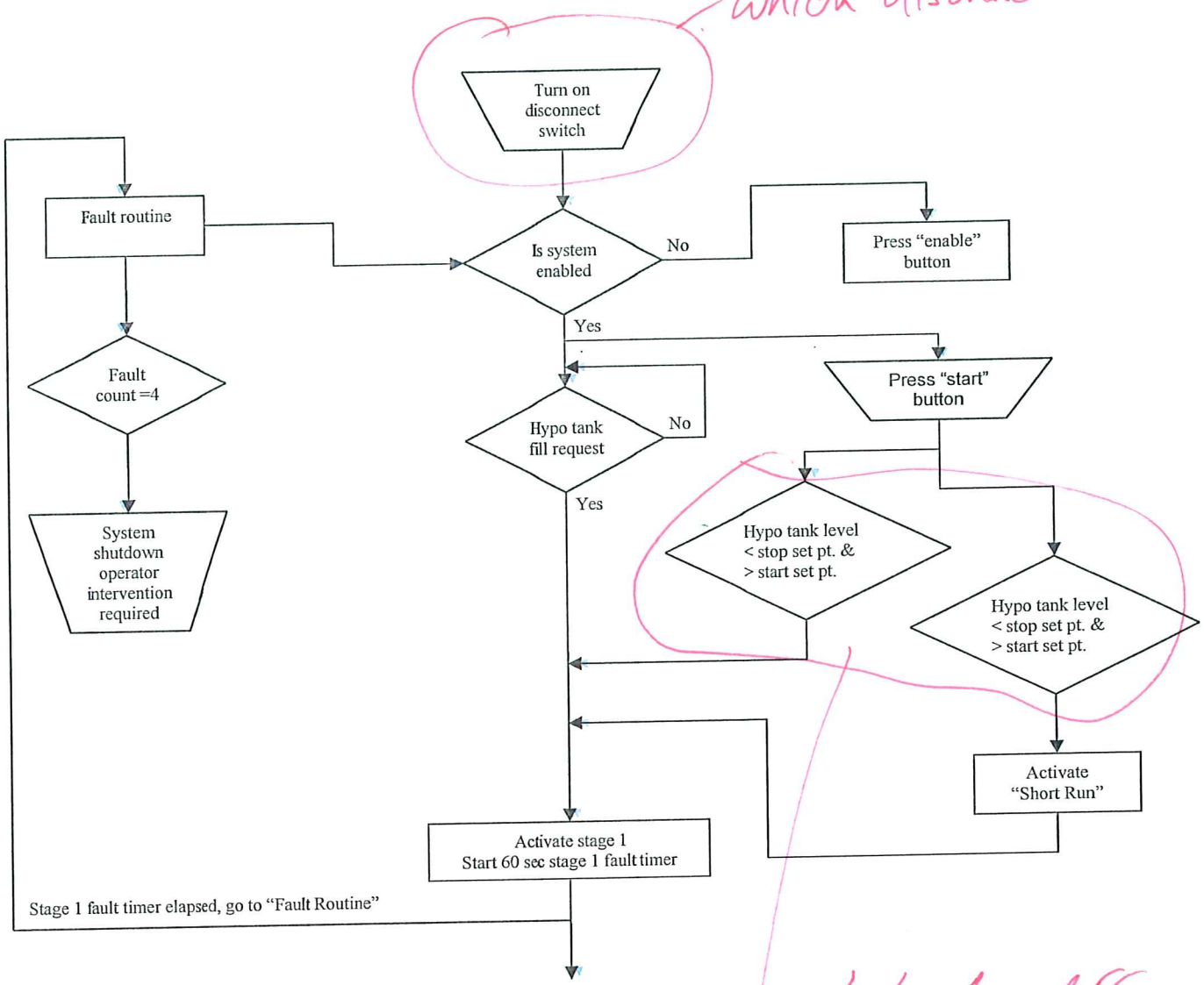

whats the difference between these two blocks.

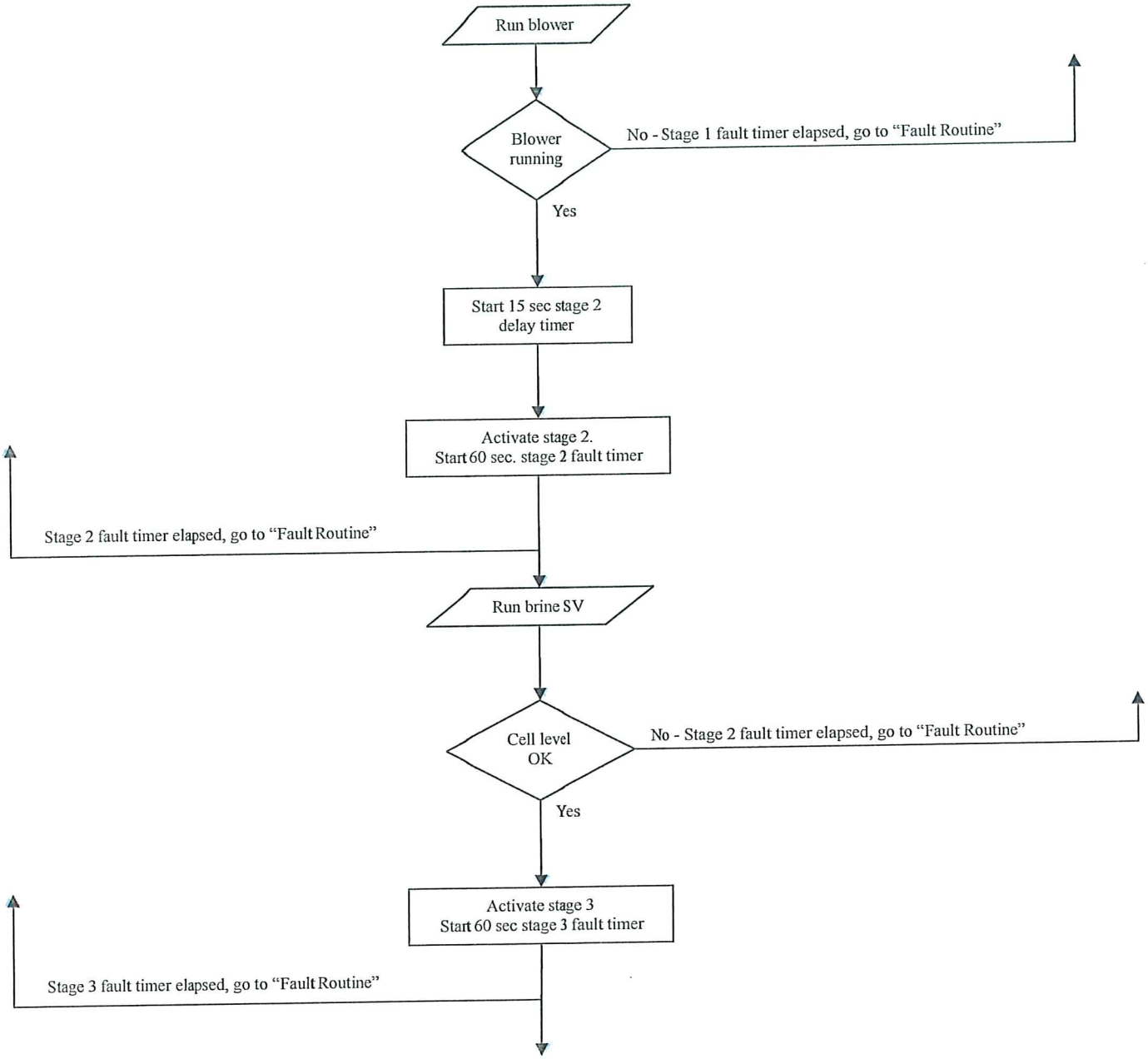
Run blower
Blower running
No - Stage 1 fault timer elapsed, go to "Fault Routine"
Yes
Start 15 sec stage 2 delay timer
Activate stage 2.
Start 60 sec. stage 2 fault timer
Stage 2 fault timer elapsed, go to "Fault Routine"
Run brine SV
Cell level OK
No - Stage 2 fault timer elapsed, go to "Fault Routine"
Yes
Activate stage 3
Start 60 sec stage 3 fault timer
Stage 3 fault timer elapsed, go to "Fault Routine"

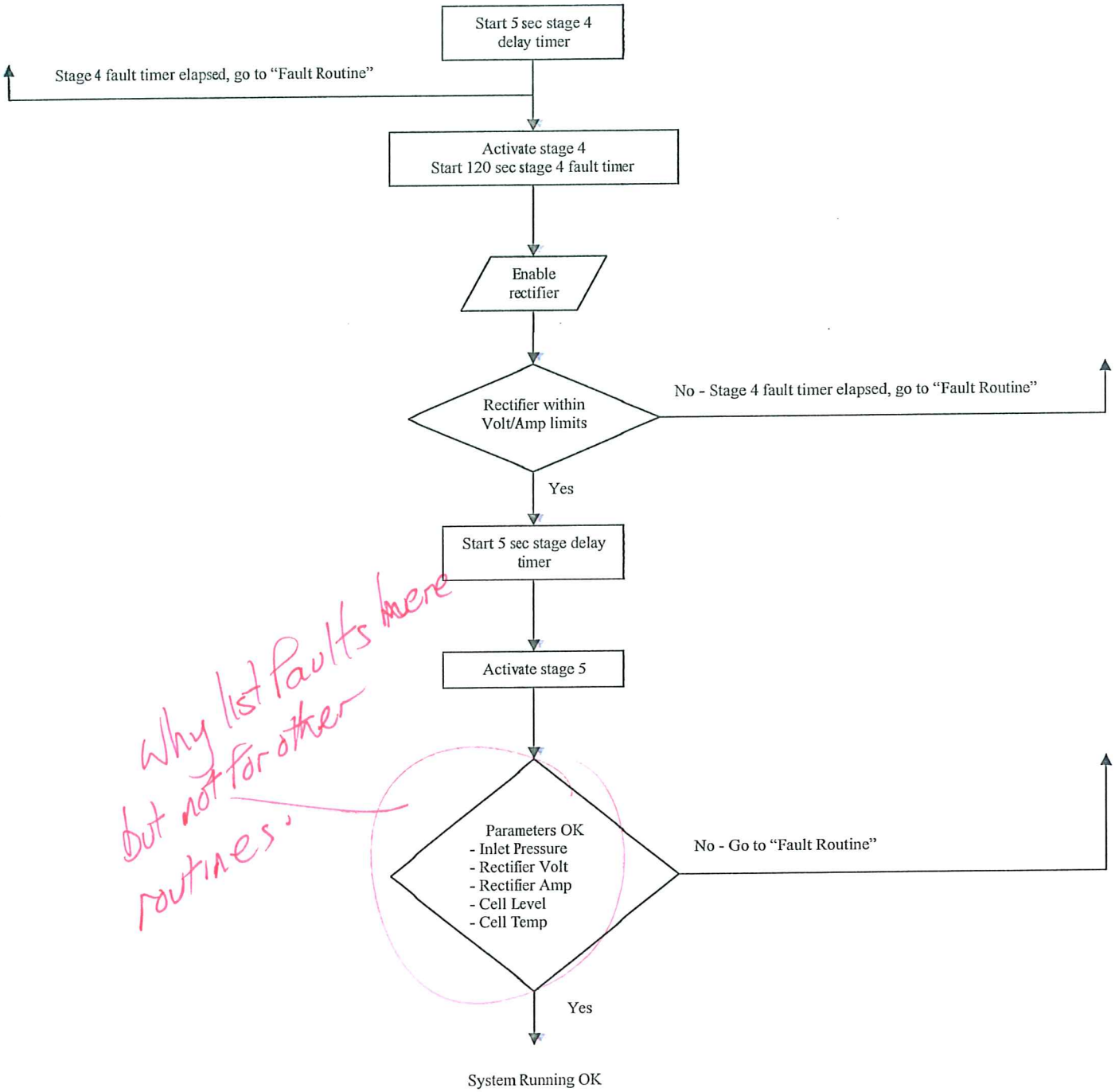

Why list faults here but not for other routines.

6.6. SYSTEM SET POINTS

Process Variable	Set Point	Set Point Time Delay
Rectifier Current Control	1275 Amps	0s
Hypochlorite Tank TK J500A Start Level	60%	10s On-Delay
Hypochlorite Tank TK J500A Stop Level	90%	10s On-Delay
Hypochlorite Tank TK J500A Low Level	40%	10s On-Delay
Hypochlorite Tank TK J500A High Level	95%	10s On-Delay
Hypochlorite Tank TK J520A Start Level	60%	10s On-Delay
Hypochlorite Tank TK J520A Stop Level	90%	10s On-Delay
Hypochlorite Tank TK J520A Low Level	40%	10s On-Delay
Hypochlorite Tank TK J520A High Level	95%	10s On-Delay
Hypochlorite Tank TK J540A Start Level	60%	10s On-Delay
Hypochlorite Tank TK J540A Stop Level	90%	10s On-Delay
Hypochlorite Tank TK J540A Low Level	40%	10s On-Delay
Hypochlorite Tank TK J540A High Level	95%	10s On-Delay
Hypochlorite Tank TK J560A Start Level	60%	10s On-Delay
Hypochlorite Tank TK J560A Stop Level	90%	10s On-Delay
Hypochlorite Tank TK J560A Low Level	40%	10s On-Delay
Hypochlorite Tank TK J560A High Level	95%	10s On-Delay
Brine Tank TK J100A Start Level	10%	0s On-Delay
Brine Tank TK J100A Stop Level	20%	120s Off-Delay
Brine Tank TK J200A Start Level	10%	0s On-Delay
Brine Tank TK J200A Stop Level	20%	120s Off-Delay

6.7. SYSTEM OPERATING RANGES

Process Variable	Target Range	Comments
Rectifier Current	1275 Amps	Nominal +/- 10 Amps
Rectifier Voltage	100 VDC	Nominal-within alarm ranges
Water Cell Flow 1	3,200 L/H	
Water Cell Flow 2	3,200 L/H	
Brine Cell Flow	640 L/H	
Hypochlorite Tank TK J500A Level	60%-90%	
Hypochlorite Tank TK J520A Level	60%-90%	
Hypochlorite Tank TK J540A Level	60%-90%	
Hypochlorite Tank TK J560A Level	60%-90%	
Brine Tank TK J100A Level	10%-20%	
Brine Tank TK J200A Level	10%-20%	
Water Temperature	15-27 C°	

Is this ok to only empty tanks to 60%. will this cause deterioration in strength of solution due to long storage times?

6.8. ALARMS SET POINTS

Alarm	Time Delay	Description	Set Point
Stage 1 Fault	60s	Blower Interlocks not meet	N/A
Stage 2 Fault	180s	Electrolytic cell failed to fill with brine	N/A
Stage 3 Fault	60s	Cell flows-not within proper range	N/A
Stage 4 Fault	120s	DC power not up to proper current, voltage	N/A
Cell Level Switch	10s	Digital input 1=OK, 0=alarm	N/A
Cell temperature switch	0s	Digital input 1=OK, 0=alarm	N/A
Product Ball Valve Limit Switch	0s	Digital input 1=OK, 0=alarm	N/A
Product Rupture Disk	0s	Digital input 1=OK, 0=alarm	N/A
Hydrogen Vent Ball Valve Limit Switch	0s	Digital input 1=OK, 0=alarm	N/A
High Inlet Pressure Switch	0s	Digital input 1=OK, 0=alarm	N/A
Pressure Relief Valve Flow Switch	0s	Digital input 1=OK, 0=alarm	N/A
Cell Flow 1 Low Low Flow	5s	Alarm Active if target flow < 2,400 L/H	2,400 L/H
Cell Flow 1 Low Flow	10s	Alarm Active if target flow < 2,800 L/H	2,800 L/H
Cell Flow 1 High Flow	10s	Alarm Active if target flow > 3,500 L/H	3,500 L/H
Cell Flow 2 Low Low Flow	5s	Alarm Active if target flow < 2,400 L/H	2,400 L/H
Cell Flow 2 Low Flow	5s	Alarm Active if target flow < 2,800 L/H	2,800 L/H
Cell Flow 2 High Flow	10s	Alarm Active if target flow > 3,500 L/H	3,500 L/H
Rectifier Fault	5s	Digital input 1=OK, 0=alarm	N/A
Rectifier Low Voltage	30s	Alarm active if voltage <95 VDC	95 VDC
Rectifier High Voltage	30s	Alarm active if voltage >105 VDC	105 VDC
Rectifier Low Current	30s	Alarm active if current < 1200ADC	1200ADC
Rectifier High Current	30s	Alarm active if current > 1325ADC	1325ADC
Vent Blower Current Switch	3s	Digital input 1=OK, 0=alarm	N/A
Vent Air Flow Switch	3s	Digital input 1=OK, 0=alarm	N/A
Vent Differential Pressure Switch	3s	Digital input 1=OK, 0=alarm	N/A
Tank Blower Current Switch	3s	Digital input 1=OK, 0=alarm	N/A
Tank Air Flow Switch	3s	Digital input 1=OK, 0=alarm	N/A
Tank Differential Pressure Switch	3s	Digital input 1=OK, 0=alarm	N/A
Tank Low Level	10s		20%
Tank High Level	10s		95%
Hydrogen Detector	0s		50%LEL

6.9. SCADA COMMUNICATIONS

Note: Recommended SCADA Information. Final plc addresses to be determined.

Data Monitored	PLC Address	Note
Flow Meter FT-J001A- Flow Rate	TBD-Integer	
Flow Meter FT-J001A- Flow Total	TBD-Integer	
Brine Tank TK-J100A- Brine Temperature	TBD-Integer	
Brine Tank TK-J100A- Brine Level	TBD-Integer	
Brine Tank TK-J100A- Salt Level	TBD-Integer	
Brine Tank TK-J200A- Brine Temperature	TBD-Integer	
Brine Tank TK-J200A- Brine Level	TBD-Integer	
Brine Tank TK-J200A- Salt Level	TBD-Integer	
Hydrogen Detector AI-J450A	TBD-Integer	
Hydrogen Detector AI-J550A	TBD-Integer	
Rectifier RT-J400- Current	TBD-Integer	

this list needs to be discussed. It may be required ~~for~~ to allow control from SCADA in main control room.

Rectifier RT-J400- Voltage	TBD-Integer	
Generator EL-J400- Cell Flow FT-J400A	TBD-Integer	
Generator EL-J400- Cell Flow FT-J400B	TBD-Integer	
Rectifier RT-J420- Current	TBD-Integer	
Rectifier RT-J420- Voltage	TBD-Integer	
Generator EL-J420- Cell Flow FT-J420A	TBD-Integer	
Generator EL-J420- Cell Flow FT-J420B	TBD-Integer	
Rectifier RT-J440- Current	TBD-Integer	
Rectifier RT-J440- Voltage	TBD-Integer	
Generator EL-J440- Cell Flow FT-J440A	TBD-Integer	
Generator EL-J440- Cell Flow FT-J440B	TBD-Integer	
Sodium Hypochlorite Solution Tank TK-J500A Level	TBD-Integer	
Sodium Hypochlorite Solution Tank TK-J520A Level	TBD-Integer	
Sodium Hypochlorite Solution Tank TK-J540A Level	TBD-Integer	
Sodium Hypochlorite Solution Tank TK-J560A Level	TBD-Integer	
TK-J500A Inlet Valve FV-J500A Position	TBD-Integer	3 bits over 1 word
TK-J500A Outlet Valve FV-J500B Position	TBD-Integer	3 bits over 1 word
TK-J520A Inlet Valve FV-J520A Position	TBD-Integer	3 bits over 1 word
TK-J520A Outlet Valve FV-J520B Position	TBD-Integer	3 bits over 1 word
TK-J540A Inlet Valve FV-J540A Position	TBD-Integer	3 bits over 1 word
TK-J540A Outlet Valve FV-J540B Position	TBD-Integer	3 bits over 1 word
TK-J560A Inlet Valve FV-J560A Position	TBD-Integer	3 bits over 1 word
TK-J560A Outlet Valve FV-J560B Position	TBD-Integer	3 bits over 1 word
Blower BLR-J450A Run Status	TBD-Integer	10 bits over 1 word
Blower BLR-J450B Run Status		
Blower BLR-J500A Run Status		
Blower BLR-J500B Run Status		
Blower BLR-J520A Run Status		
Blower BLR-J520B Run Status		
Blower BLR-J540A Run Status		
Blower BLR-J540B Run Status		
Blower BLR-J560A Run Status		
Blower BLR-J560B Run Status		
Hardness Monitor HM-J001A Alarm	TBD-Integer	16 bits over 1 word
Generator EL-J400- Stage 1 Fault		
Generator EL-J400- Stage 2 Fault		
Generator EL-J400- Stage 3 Fault		
Generator EL-J400- Stage 4 Fault		
Generator EL-J400- Level Switch Alarm		
Generator EL-J400- Temperature Switch Alarm		
Generator EL-J400- Product Ball Valve Limit Switch		
Generator EL-J400- Product Rupture Disk		
Generator EL-J400- Hydrogen Vent Ball Valve Limit Switch Alarm		
Generator EL-J400- High Inlet Pressure Switch Alarm		
Generator EL-J400- Pressure Relief Valve Flow Switch Alarm		
Generator EL-J400- Cell Flow 1 Low Low Flow Alarm		
Generator EL-J400- Cell Flow 1 Low Flow Alarm		
Generator EL-J400- Cell Flow 1 High Flow Alarm		
Generator EL-J400- Cell Flow 2 Low Low Flow Alarm		
Generator EL-J400- Cell Flow 2 Low Flow Alarm	TBD-Integer	16 bits over 1 word
Generator EL-J400- Cell Flow 2 High Flow Alarm		
Generator EL-J400- Rectifier Fault		
Generator EL-J400- Rectifier Low Voltage Alarm		

Generator EL-J400- Rectifier High Voltage Alarm		
Generator EL-J400- Rectifier Low Current Alarm		
Generator EL-J400- Rectifier High Current Alarm		
Generator EL-J400- Shutdown Alarm		
Generator EL-J420- Stage 1 Fault		
Generator EL-J420- Stage 2 Fault		
Generator EL-J420- Stage 3 Fault		
Generator EL-J420- Stage 4 Fault		
Generator EL-J420- Level Switch Alarm		
Generator EL-J420- Temperature Switch Alarm		
Generator EL-J420- Product Ball Valve Limit Switch Alarm		
Generator EL-J420- Product Rupture Disk Alarm		
Generator EL-J420- Hydrogen Vent Ball Valve Limit Switch Alarm	TBD-Integer	16 bits over 1 word
Generator EL-J420- High Inlet Pressure Switch Alarm		
Generator EL-J420- Pressure Relief Valve Flow Switch Alarm		
Generator EL-J420- Cell Flow 1 Low Low Flow Alarm		
Generator EL-J420- Cell Flow 1 Low Flow Alarm		
Generator EL-J420- Cell Flow 1 High Flow Alarm		
Generator EL-J420- Cell Flow 2 Low Low Flow Alarm		
Generator EL-J420- Cell Flow 2 Low Flow Alarm		
Generator EL-J420- Cell Flow 2 High Flow Alarm		
Generator EL-J420- Rectifier Fault		
Generator EL-J420- Rectifier Low Voltage Alarm		
Generator EL-J420- Rectifier High Voltage Alarm		
Generator EL-J420- Rectifier Low Current Alarm		
Generator EL-J420- Rectifier High Current Alarm		
Generator EL-J420- Shutdown Alarm		
Generator EL-J440- Stage 1 Fault		
Generator EL-J440- Stage 2 Fault	TBD-Integer	16 bits over 1 word
Generator EL-J440- Stage 3 Fault		
Generator EL-J440- Stage 4 Fault		
Generator EL-J440- Level Switch Alarm		
Generator EL-J440- Temperature Switch Alarm		
Generator EL-J440- Product Ball Valve Limit Switch		
Generator EL-J440- Product Rupture Disk Alarm		
Generator EL-J440- Hydrogen Vent Ball Valve Limit Switch Alarm		
Generator EL-J440- High Inlet Pressure Switch Alarm		
Generator EL-J440- Pressure Relief Valve Flow Switch Alarm		
Generator EL-J440- Cell Flow 1 Low Low Flow Alarm		
Generator EL-J440- Cell Flow 1 Low Flow Alarm		
Generator EL-J440- Cell Flow 1 High Flow Alarm		
Generator EL-J440- Cell Flow 2 Low Low Flow Alarm		
Generator EL-J440- Cell Flow 2 Low Flow Alarm		
Generator EL-J440- Cell Flow 2 High Flow Alarm		
Generator EL-J440- Rectifier Fault	TBD-Integer	16 bits over 1 word
Generator EL-J440- Rectifier Low Voltage Alarm		
Generator EL-J440- Rectifier High Voltage Alarm		
Generator EL-J440- Rectifier Low Current Alarm		
Generator EL-J440- Rectifier High Current Alarm		
Generator EL-J440- Shutdown Alarm		
Blower BLR-J450A & BLR-J450B- Air Flow Switch Alarm		
Blower BLR-J450A & BLR-J450B- Pressure Differential Switch Alarm		
Blower BLR-J500A & BLR-J500B- Air Flow Switch Alarm		

Blower BLR-J500A & BLR-J500B- Pressure Differential Switch Alarm		
Blower BLR-J520A & BLR-J520B- Air Flow Switch Alarm		
Blower BLR-J520A & BLR-J520B- Pressure Differential Switch Alarm		
Blower BLR-J540A & BLR-J540B- Air Flow Switch Alarm		
Blower BLR-J540A & BLR-J540B- Pressure Differential Switch Alarm		
Blower BLR-J560A & BLR-J560B- Air Flow Switch Alarm		
Blower BLR-J560A & BLR-J560B- Pressure Differential Switch Alarm		

/ where are signals to control doing pump speed etc.

Earth Tech (Canada) Inc.

Reviewed for general conformance with design intent. Responsibility for detailed design in the shop drawings rests with the Contractor.

Responsibility for verification and correlation of field dimensions, fabrication process, techniques of construction, installation and coordination of all parts of the work rests with the Contractor.

REVIEWED _____

REVIEWED AS MODIFIED ✓

REVISE AND RE-SUBMIT _____

NOT REVIEWED _____

Project No. 29535-C25-16

Date: 5/2/07 By: M. Jordan

REV	DATE	DESCRIPTION	DRAWN BY	CHECKED BY	APPROVED BY
0	07/17/06	ISSUED FOR APPROVAL	CM	JPM	
1	10/10/06	SYMBOLS CHANGED PER ENGINEER'S COMMENTS	JMP		
2	01/08/07	CHANGES & ADDITIONS PER ENGINEER'S COMMENTS	JMP		

CITY OF WINNIPEG
Water Treatment Plant

(x3) CT-1500 (680KG/Day) SKID
ON-SITE SODIUM HYPOCHLORITE GENERATION SYSTEM
PIPING AND INSTRUMENTATION DIAGRAM

Earth Tech (Canada) Inc.

Reviewed for general conformance with design intent. Responsibility for detailed design in the shop drawings rests with the Contractor.

Responsibility for verification and correlation of field dimensions, fabrication process, techniques of construction, installation and coordination of all parts of the work rests with the Contractor.

REVIEWED ____
REVIEWED AS MODIFIED ✓
REVISE AND RE-SUBMIT ____
NOT REVIEWED ____
Project No. 79538-C28-16
Date: 31/1/07 By: M. Youlon

SEE COMMENTS ON DRAWINGS

SEVERN TRENT SERVICES **CLORTEC**

2660 COLUMBIA STREET TORRANCE, CALIFORNIA 90503
TELEPHONE No: (310) 618-9700 FAX No: (310) 618-1384
WEB SITE: www.severntrentservices.com

UNLESS OTHERWISE NOTED
TOLERANCES:

TYPE:	INCHES	[MM]
FRACTIONS	± 1/8"	
.X	± .1"	± 2.5
.XX	± .01"	± .51
.XXX	± .005"	± .127
ANGLES	± 1°	

NOTICE OF CONFIDENTIALITY

THIS DOCUMENT CONTAINS PROPRIETARY INFORMATION THAT IS AND SHALL REMAIN THE PROPERTY OF CLORTEC AND IS TO BE RETURNED IMMEDIATELY UPON REQUEST. ITS CONTENTS MAY NOT BE REPRODUCED, DISTRIBUTED, CIRCULATED, OR DISCLOSED TO THIRD PARTIES. RECIPIENT WILL NOT USE THIS INFORMATION FOR PURPOSES OTHER THAN INTENDED WITHOUT PRIOR WRITTEN CONSENT OF CLORTEC.

CITY OF WINNIPEG
WATER TREATMENT PLANT
Winnipeg, Canada

PROJECT:

TITLE:
(X3) CT-1500(680 KGS/DAY) RACK MOUNTED
ON-SITE SODIUM HYPOCHLORITE
GENERATION SYSTEM
PIPING & INSTRUMENTATION DIAGRAM

SCALE:	CLORTEC JOB No:	SIZE:	REV:
NTS	CPG0465		2

DWG No: CPG0465-I-01
SHEET: 1 OF 7

REV	DATE	DESCRIPTION	DRAWN BY	CHECKED BY	APPROVED BY
0	07.17.06	ISSUED FOR APPROVAL	CM	JPM	
1	10/10/06	SYMBOLS CHANGED PER ENGINEER'S COMMENTS	JMP		
2	01/08/07	CHANGES & ADDITIONS PER ENGINEER'S COMMENTS	JMP		

INSTRUMENT IDENTIFICATION TABLE

	FIRST-LETTER	SUCCEEDING-LETTERS	
	MEASURED OR INITIATING VARIABLE	READOUT OR PASSIVE FUNCTION	OUTPUT FUNCTION
A	ANALYSIS (1)	ALARM	
B	BURNER, COMBUSTION	CLOSED	CLOSE
C	CONDUCTIVITY		CONTROL
D	DENSITY	OPEN	OPEN
E	VOLTAGE	SENSOR (PRIMARY ELEMENT)	
F	FLOW RATE	FAILURE	
G	GAS	GLASS, VIEWING DEVICE	
H	HAND	HIGH	
I	CURRENT (ELECTRICAL)	INDICATE	
J	POWER		
K	TIME, TIME SCHEDULE		CONTROL STATION
L	LEVEL	LOW, LIGHT	
M	MOTOR	OPERATING OR ON/OFF	
N	MOISTURE		START
O		OVERLOAD	STOP
P	PRESSURE, VACUUM	POINT (TEST) CONNECTION	
Q	COMMON	QUANTITY	
R	RADIATION	RECORD	
S	SPEED, FREQUENCY		SWITCH
T	TEMPERATURE		TRANSMIT
U	MULTIVARIABLE	MULTIFUNCTION	MULTIFUNCTION
V	VIBRATION, MECHANICAL ANALYSIS (1)		VALVE DAMPER, LOUVER
W	WEIGHT, FORCE	WELL	
X	UNCLASSIFIED	UNCLASSIFIED	UNCLASSIFIED
Y	EVENT, STATE OR PRESENCE (2)		RELAY, COMPUTE, CONVERT (3)
Z	POSITION, DIMENSION		DRIVER, ACTUATOR UNCLASSIFIED FINAL CONTROL ELEMENT

NOTES:

1. IT IS EXPECTED THAT THE TYPE OF ANALYSIS BE DEFINED OUTSIDE THE TAGGING BUBBLE.
2. FIRST LETTER Y IS INTENDED FOR USE WHEN CONTROL OR MONITORING RESPONCES ARE EVENT DRIVEN AS OPPOSED TO TIME OR TIME-SCHEDULE DRIVEN. THE LETTER Y, IN THIS POSITION, CAN ALSO SIGNIFY PRESENCE OR STATE.
3. IT IS EXPECTED THAT THE FUNCTIONS ASSOCIATED WITH THE USE OF SUCCEEDING LETTER Y WILL BE DEFINED OUTSIDE THE TAGGING BUBBLE. THIS DEFINITION NEED NOT BE MADE WHEN THE FUNCTION IS SELF-EVIDENT, AS FOR A SOLENOID VALVE IN A FLUID SIGNAL LINE.

COMMON INSTRUMENT / DEVICE IDENTIFIERS

ISA IDENTIFIER	INITIATING VARIABLE AND FUNCTION	ISA IDENTIFIER	INITIATING VARIABLE AND FUNCTION
AS	ANALYSIS SWITCH	PI	PRESSURE INDICATOR
AE	ANALYSIS ELEMENT	PT	PRESSURE TRANSMITTER
AT	ANALYSIS TRANSMITTER	PIT	PRESSURE INDICATOR TRANSMITTER
CS	CONDUCTIVITY SWITCH	PS	PRESSURE SWITCH
CT	CONDUCTIVITY TRANSMITTER	SC	SPEED CONTROLLER
DS	DENSITY SWITCH	SI	SPEED INDICATOR
ET	VOLTAGE TRANSMITTER	ST	SPEED TRANSMITTER
FC	FLOW CONTROLLER	TC	TEMPERATURE CONTROLLER
FE	FLOW ELEMENT	TE	TEMPERATURE ELEMENT
FI	FLOW INDICATOR	TI	TEMPERATURE INDICATOR
FS	FLOW SWITCH	TS	TEMPERATURE SWITCH
FT	FLOW TRANSMITTER	TT	TEMPERATURE TRANSMITTER
FY	FLOW RELAY	TY	TEMPERATURE RELAY
FZ	FLOW DRIVE	UR	MULTIVARIABLE RECORDER
HS	HAND SWITCH	VT	VIBRATION TRANSMITTER
IT	CURRENT TRANSMITTER	WE	WEIGHT ELEMENT
JT	POWER TRANSMITTER	WT	WEIGHT TRANSMITTER
KC	TIME CONTROLLER	XX	UNCLASSIFIED
KI	ELAPSED TIME INDICATOR	YC	STATE CONTROL
LE	LEVEL ELEMENT	YN	STATE ON
LI	LEVEL INDICATOR	YY	EVENT RELAY
LS	LEVEL SWITCH	YS	EVENT SWITCH
LT	LEVEL TRANSMITTER	ZS	POSITION SWITCH
LY	LEVEL RELAY	ZT	POSITION TRANSMITTER
PC	PRESSURE CONTROLLER	ZZ	POSITION DRIVE

Notes: 1. [●] Indicates supplied by others.
2. Unit: mm [Inch]. Do not scale this drawing. All dimensions, sizing, orientations of piping, wiring and equipment, are estimations and approximations and are not to be used in other related design.
3. The information contained on this drawing is of confidential nature and shall not be used or reproduced without written consent from Metcon Sales and Engineering Limited.

EQUIPMENT IDENTIFICATION AND TAGGING

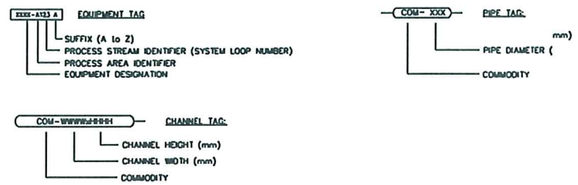

INSTRUMENT SYMBOLS

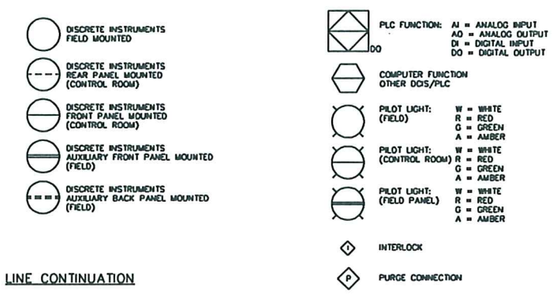

LINE CONTINUATION

INSTRUMENT DESIGNATION NUMBER

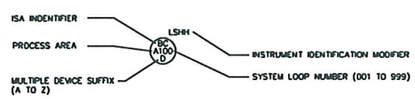

POSITION FORMATS

PROCESS AREA IDENTIFIER		PROCESS STREAM IDENTIFIER (LOOP NUMBER)
CHEMICAL FEED	C	001 - 999
DEACON BOOSTER PUMP STATION	D	001 - 999
FILTRATION	F	001 - 999
PLANT UTILITIES:	H	
AIR PRESSURE		
ELECTRICAL DISTRIBUTION		
EMERGENCY GENERATOR		901 - 950
ELECTRICAL SUBSTATION		951 - 999
HVAC		000 - 100
SITE COMMUNICATION		
FLUSH WATER		
NATURAL GAS		
FIRE PUMPS		100 - 199
AUXILIARY BUILDINGS HVAC		200 - 299
BUILDING SAFETY & SECURITY		300 - 299
PROCESS SUMPS		400 - 499
SANITARY SUMPS		500 - 599
POTABLE WATER		700 - 799
INLET WORKS & RAW WATER	I	001 - 999
FREEZE THAW POND	L	001 - 999
GENERAL SITE SERVICES/ MISCELLANEOUS:	M	001 - 999
YARD PIPING		
YARD LIGHTING		
OZONE	O	001 - 999
FLOCULATION AND DAF	P	001 - 999
RESIDUALS HANDLING	R	001 - 999
BULK CHEMICAL STORAGE	S	001 - 999
TREATED WATER STORAGE & HANDLING (CLEARWELL)	T	001 - 999
ULTRAVIOLET LIGHT DISINFECTION	U	001 - 999
ON-SITE HYPOCHLORITE GENERATION	J	001 - 999

INSTRUMENT IDENTIFICATION MODIFIER

CAH	CONDUCTIVITY ALARM HIGH	LSH	LEVEL SWITCH HIGH
COH	COMPUTER/OFF/HAND	LSL	LEVEL SWITCH LOW
DO	DISSOLVED OXYGEN	MCC	MOTOR CONTROL CENTRE
D/P	DIFFERENTIAL PRESSURE	O/L	OVERLOAD
FAH	FLOW ALARM HIGH	PAH	PRESSURE ALARM HIGH
FAL	FLOW ALARM LOW	PAL	PRESSURE ALARM LOW
FSH	FLOW SWITCH HIGH	pH	pH
FSL	FLOW SWITCH LOW	PSH	PRESSURE SWITCH HIGH
H/A	HAND / AUTO	PSL	PRESSURE SWITCH LOW
HOA	HAND / OFF / AUTO	RTD	RESISTIVE TEMPERATURE DEVICE
I/I	CURRENT / CURRENT ISOLATOR	S/S	START / STOP
I/P	CURRENT / PRESSURE CONVERTER	SEL	SELECTOR
IAH	CURRENT ALARM HIGH	SOL	SOLENOID
LAH	LEVEL ALARM HIGH	T/C	THERMOCOUPLE
LAL	LEVEL ALARM LOW	TAH	TEMPERATURE ALARM HIGH
		TAL	TEMPERATURE ALARM LOW
		TSH	TEMPERATURE SWITCH HIGH
L/L	LEAD / LAG	TSL	TEMPERATURE SWITCH LOW
LOS	LOCK-OFF-STOP	WDG	WINDING
L/R	LOCAL / REMOTE		

PROCESS LINE CODES

COMMODITY

AA	AQUA AMMONIA	HFS	HYDROFLUOSILICIC ACID
AGA	ATOMIZING AIR	HP	HYDROGEN PEROXIDE
AS	AIR SCOUR (FILTERS)	HST	12% HYPOCHLORITE SOLUTION
AHP	AIR HIGH PRESSURE (OZONE)	HYP	0.8% HYPOCHLORITE SOLUTION
ALP	AIR LOW PRESSURE (OZONE)	ITA	INSTRUMENT AIR
BS	BRINE SOLUTION	LGO	LUBRICATING OIL
BWS	BACKWASH SUPPLY WATER	LOX	LIQUID OXYGEN
BWW	BACKWASH WASTE WATER	NG	GAS
CA	COMPRESSED AIR (DAF)	OF	OVERFLOW
CCW	CIRCULATING COOLING WATER	OZG	OZONE OFF GAS
CL2	CHLORINE	OZO	OZONATED OXYGEN
CLG	CHLORINE GAS	OZW	OZONATED WATER
CLS	CHLORINE SOLUTION	PEF	PHOSPHATE FEED
CO2	CARBON DIOXIDE	PLD	DRY POLYMER
CRW	CLARIFIER DISCHARGE WATER	PLS	POLYMER SOLUTION
CS	CAUSTIC SODA	PSW	PLANT SERVICE WATER
DO	DEACON EFFLUENT (POST UV)	PW	POTABLE WATER
DDW	DEMINERALIZED WATER	RD	ROOF DRAIN
DEA	DILUTE ACID	RW	RAW WATER
DEC	DILUTE CAUSTIC	SAM	SAMPLE
DF	DAF FLOAT	SAN	SANITARY DRAINAGE
DFR	DIESEL FUEL RETURN	SBS	SODIUM BISULPHITE
DFS	DIESEL FUEL SUPPLY	SCA	SULPHURIC ACID
DO	DISOLVED OXYGEN	SHC	SODIUM HYPOCHLORITE
DRA	DRAINAGE (FLOORS)	SHO	SODIUM HYDROXIDE
DRN	DRAINS, CLEAN DRAINS	SPD	SUMP PUMP DISCHARGE
DS	DEACON SUCTION	STD	DRY SALT
DSW	DISTILLED WATER	SDR	DAF RECYCLE
DU	DEACON UV (PRE UV)	SLO	SEAL OIL
EE	ENGINE EXHAUST	SLU	SLUDGE
FC	FERRIC CHLORIDE	SUP	SUPERNATANT
FED	FILTER MEDIA EDUCTER	SWD	STORMWATER DRAINAGE
FIN	FILTER INFLUENT	SW	SEAL WATER
FPW	FIRE PROTECTION WATER	TRW	TREATED WATER
FTR	FILTER-TO-RECYCLE	TP	TRAP PRIMER
FW	FILTERED WATER	VA	VACUUM LABORATORY
GOX	GASEOUS OXYGEN	VTA	VENT TO ATMOSPHERE
HCO	HYDRAULIC OIL	WS	SOFTENED WATER

PIPE EXPOSURE

BUR	BURIED	SUB	SUBMERGED
EXP	EXPOSED	ENC	CONCRETE ENCASED

PIPE MATERIAL

CISP	CAST IRON SOIL PIPE	PCCP	PRESTRESSED CONCRETE CYLINDER
CLDI	CEMENT LINED DUCTILE IRON	PSTL	PVDF LINED STEEL
CMP	CORRUGATED METAL PIPE	PVC	POLYVINYL CHLORIDE
COP	COPPER	PVDF	POLYVINYLIDENE FLOURIDE
CPVC	CHLORINATED PVC	RCP	REINFORCED CONCRETE PIPE
DI	DUCTILE IRON	RSTL	RUBBER LINED STEEL
FRPX	FIBERGLASS REINFORCED PLASTIC	SST	STAINLESS STEEL
GLDI	GLASS LINED DUCTILE IRON	STL	STEEL
GSP	GALVANISED STEEL PIPE	VC	VITRIFIED CLAY PIPE
HDPE	HIGH DENSITY POLYETHYLENE		

PRESSURE TESTING

H	HYDROSTATIC	P	PNEUMATIC
I	IN SERVICE	NA	NOT APPLICABLE

ABBREVIATIONS

ACK	ACKNOWLEDGE	E/A	EXHAUST AIR
ALM	ALARM	E/S	ELECTRICAL SUPPLY
A/M	AUTO/MANUAL	ESD	EMERGENCY SHUTDOWN
A/S	AIR SUPPLY	FCL	FAIL CLOSE
BRG	BEARING	FOP	FAIL OPEN
CURR	CURRENT	F/R	FORWARD or REVERSE
DEC	DECREASE	HI	HIGH
DE	DRIVE END	HP	HORSE POWER (kW)

ABBREVIATIONS CONT

kW	KILOWATT		
HVAC	HEATING/VENTILATION/AIR CONDITIONING	PWR	POWER
INC	INCREASE	RSP	REMOTE SET POINT
INJ	INJECTOR	RST	RESET
LO	LOW	SP	SAMPLE POINT or SET POINT (Depending on Application)
LOS	LOCAL/OFF/STOP		
L/R	LOCAL/REMOTE	STN	STATION
MLD	MEGALITERS PER DAY	SPD	SPEED
NC	NORMALLY CLOSED	STDBY	STANDBY
NLL	NORMALLY LIQUID LEVEL	STP	STOP
NNF	NORMALLY NO FLOW	STR	START
NO	NORMALLY OPEN	STS	STATUS
O/A	OUTSIDE AIR	TST	TEST
O/C	OPEN/CLOSED	TYP	TYPICAL
ODE	OPPOSITE DRIVE END	UV	ULTRA-VIOLET LIGHT
PF	POWER FACTOR	U/S	UNDER SIDE
PO	PUMP OUT	VAC	VACUUM
PSD	PLANT SHUTDOWN	VIB	VIBRATION
PV	PROCESS VARIABLE	W/S	WATER SUPPLY
		WDG	WINDING

EQUIPMENT DESIGNATIONS

ARV	AIR RELEASE VALVE	HWP	HOT WATER PUMP
ACU	AIR CONDITIONING UNIT	IMP	INSTRUMENT MARSHALLING PANEL
ACR	ACCESS CARD READER	KP	KEY PAD
AD	AIR DRYER	LCP	LOCAL CONTROL PANEL
AHU	AIR HANDLING UNIT	LCV	LEVEL CONTROL VALVE
ATS	AUTOMATIC TRANSFER SWITCH	LJB	LOCAL JUNCTION BOX
BAT	BATTERY	LOP	LUBE OIL PUMP
BB	BASEBOARD HEATER	LV	LEVEL CONTROL VALVE (OPEN/CLOSE)
BD	BACKDRAFT DAMPER	M	MOTOR
BFP	BACK FLOW PREVENTER	MAU	MAKE-UP AIR UNIT
BPV	BACK-PRESSURE VALVE	MCC	MOTOR CONTROL CENTRE
BKR	BREAKER	MD	MOTION DETECTOR
BLR	BOILER	MDV	MUD VALVE
BLW	BLOWER	MP	METERING PUMP
CAL	CALIBRATION COLUMN	MXR	MIXER
CC	COOLING COIL	OP	ORIFICE PLATE
CCTV	CLOSED CIRCUIT TELEVISION	P	PUMP
CDR	CONDENSER	PCT	PARTICLE COUNTER
CDU	CATALYTIC DESTRUCT UNIT	PCU	POLYMER BULK BAG UNLOADER
CE	CENTRIFUGE	PCV	PRESSURE CONTROL VALVE
CFR	CHEMICAL FEEDER (POLYMER, CHLORINATOR, ETC.)	PFC	POWER FACTOR CORRECTION
CHLR	CHILLER	PFLT	POWER FILTER (LINE REACTOR, ETC)
CHR	BATTERY CHARGER	PNL	PANEL BOARD
CMP	COMPRESSOR	PLC	PROGRAMMABLE LOGIC CONTROLLER
CON	CONVEYOR	PPU	POLYMER PREPARATION UNIT
CP	PLC CONTROL PANEL	PRV	PRESSURE REGULATING / REDUCING VALVE
CPU	COMPUTER	PSU	POWER SUPPLY UNIT
CRN	CRANE OR HOIST	PSV	PRESSURE / VACUUM RELIEF VALVE
CTS	CATHODIC TEST STATION	PV	PRESSURE VESSEL
CV	CHECK VALVE	RV	RELIEF VALVE / RUPTURE DISC
DC	DOOR CONTACT	SOL	SOLENOID ACTUATOR
DEM	DEMISTER	SCRB	SCRUBBER
DES	DESICCANT DRYER	SE	SAMPLER ELEMENT
DV	DIAPHRAGM VALVE	SF	SUPPLY FAN
DF	DAF SKIMMER	SP	SAMPLE PUMP
DIF	DIFFUSER	SLG	SLUICE GATE
E	ENGINE	SLR	SILENCER
EF	EXHAUST FAN	SMP	SUMP PUMP
EL	ELECTROLYTIC CELL	SPS	SUPERNATANT PUMP STATION
EPR	EVAPORATOR	STA	STATIC MIXER
ETM	ELAPSED TIME METER	STR	STRAINER
ETNK	EXPANSION TANK	SUB	SUBSTATION
F	FAN	SWGR	SWITCHGEAR
FAP	FIRE ALARM ANNUNCIATOR PANEL	SWP	SWASH PLATE
FC	FLOCCULATION CHAMBER	T	TRAP
FCV	FLOW CONTROL VALVE	TCV	TEMPERATURE CONTROL VALVE
FF	FORCE FLOW HEATER	TNK	TANK (NON-PRESSURIZED)
FG	FLAP GATE	TOTE	TOTE TANK
FLC	FLOCCULATOR	TV	TEMPERATURE / VIBRATION MONITOR
FLT	FILTER	UH	UNIT HEATER ELECTRIC AND NON-ELECTRIC
FV	FLOW CONTROL VALVE (OPEN/CLOSE)	UPS	UNINTERRUPTIBLE POWER SUPPLY
GEN	GENERATOR	UVR	ULTRA-VIOLET LIGHT REACTOR
GF	GAS FILTER	VFD	VARIABLE FREQUENCY DRIVE
GV	GATE VALVE	VSD	VARIABLE SPEED DRIVE
GP	GLYCOL PUMP	V	VALVE
GT	GRAVITY THICKENER	VP	VAPOURIZER
HC	HEAT COIL	WP	WELL PUMP
HEX	HEAT EXCHANGER	W	WEIR
HWH	HOT WATER HEATER	WRT	WASHWATER RECOVERY TANK
HTR	ELECTRIC HEATER	WSF	WATER SOFTENER
HRC	HEAT RECOVERY COIL	XFMR	TRANSFORMER
HV	HAND VALVE	BS	EQUIPMENT LOCKOUT RELAY

SEVERN TRENT SERVICES
CLORTEC
2660 COLUMBIA STREET TORRANCE, CALIFORNIA 90503
TELEPHONE No: (310) 618-9700 FAX No: (310) 618-1384
WEB SITE: www.severntrentservices.com

UNLESS OTHERWISE NOTED
TOLERANCES:

TYPE:	INCHES	[MM]
FRACTIONS	± 1/8"	
.X	± .1"	± 2.5
.XX	± .01"	± .51
.XXX	± .005"	± .127
ANGLES	± 1°	

NOTICE OF CONFIDENTIALITY
THIS DOCUMENT CONTAINS PROPRIETARY INFORMATION THAT IS AND SHALL REMAIN THE PROPERTY OF CLORTEC AND IS TO BE RETURNED IMMEDIATELY UPON REQUEST. ITS CONTENTS MAY NOT BE REPRODUCED, DISTRIBUTED, CIRCULATED, OR DISCLOSED TO THIRD PARTIES. RECIPIENT WILL NOT USE THIS INFORMATION FOR PURPOSES OTHER THAN INTENDED WITHOUT PRIOR WRITTEN CONSENT OF CLORTEC.

CITY OF WINNIPEG
WATER TREATMENT PLANT
Winnipeg, Canada

PROJECT:

TITLE:
(X3)CT-1500(680 KGS/DAY) RACK MOUNTED ON-SITE SODIUM HYPOCHLORITE GENERATION SYSTEM PIPING & INSTRUMENTATION DIAGRAM

SCALE:	CLORTEC JOB No:	SIZE:	REV:
NTS	CPG0465		2

DWG No: CPG0465-I-01
SHEET: 2 OF 7

MISCELLANEOUS EQUIPMENT SYMBOLS

- ORIFICE PLATE
- FLANGE
- PIPE REDUCER
- PUMP
- FAN/BLOWER
- PROPELLER OR TURBINE METER
- STRAINER
- DRAIN
- UNION
- TE — TEMPERATURE ELEMENT WITH THERMOWELL
- SCREWED CAP
- FIRE HYDRANT
- HOSE STATION
- ANNUNCIATOR HORN
- GROUND
- C — CORIOLIS MASS FLOWMETER
- FLOAT LEVEL ELEMENT
- FT — FLOW ELEMENT INTEGRAL WITH TRANSMITTER (MASS FLOW, ETC)
- SONIC FLOWMETER (DOPPLER OR TRANSIT TIME)
- EJECTOR
- FILTER
- SILENCER
- GRINDER
- STOP LOG
- LEVEL CONTROL GATE
- FILTER
- M — MAGNETIC FLOW METER ELEMENT
- EXPANSION JOINT
- T — TRAP
- MIX TEE
- DUPLEX STRAINER
- MIXER, INLINE STATIC
- FLOW NOZZLE
- FLOAT
- SINGLE PORT PITOT TUBE
- AVERAGING PITOT TUBE
- SLUICE GATE
- SLIDE GATE
- VARIABLE AREA FLOW INDICATOR (ROTAMETER)
- VORTEX FLOW METER
- GENERATOR
- HEAT EXCHANGER
- FLAME CHECK
- CALIBRATION CHAMBER
- EMERGENCY EYE WASH AND SHOWER
- BOILER
- RECEIVER OR PRESSURE VESSEL
- TANK, DOUBLE WALLED
- TANK
- LIQUID SEPARATOR
- PUMP, SUBMERSIBLE
- PUMP, VERTICAL
- FLOW STRAIGHTENING VANES
- AIR FILTER (HVAC)
- MIXER
- PUMP, DIAPHRAGM
- PUMP, DIAPHRAGM OPERATED
- PUMP, GEAR
- PULSATION DAMPER
- AIR SEPARATOR
- MIXER
- SITE GLASS
- COMPRESSOR ROTARY SCREEN
- FLEXIBLE HOSE
- IN-LINE FLOW METER
- INJECTOR
- M — EQUIPMENT MOTOR
- WEIR
- PUMP, ROTARY LOBE
- PUMP, METERING
- PUMP, PROGRESSIVE CAVITY
- BAR SCREEN, MECHANICAL
- DIFFUSER HEADER
- ENGINE
- BACKDRAFT DAMPER

VALVES

VALVE BODIES

- GATE NO — NORMALLY OPEN GATE VALVE
- GATE NC — NORMALLY CLOSED GATE VALVE
- GLOBE NO — NORMALLY OPEN GLOBE VALVE
- GLOBE NC — NORMALLY CLOSED GLOBE VALV
- BALL NO — NORMALLY OPEN BALL VALVE
- BALL NC — NORMALLY CLOSED BALL VALVE
- BUTTERFLY — BUTTERFLY
- NEEDLE — NEEDLE
- CHECK — CHECK
- PLUG — PLUG
- KNIFE — KNIFE
- PINCH — PINCH
- BALL CHECK — BALL CHECK
- VENTED VALVE — VENTED VALVE
- DBLE L CHECK — DOUBLE LEAF CHECK
- ANGLEVALVE — ANGLE
- ANG PRES REL — ANGLE AND GATE PRESSURE RELIEF VALVE
- GTE PRE REL
- IN SAFE — IN-LINE SAFETY
- STP CHK — STOP CHECK
- SPNG CHECK — SPRING OPERATED CHECK
- AIR CHK — AIR ASSISTED CHECK
- COCK V — COCK VALVE
- DUCKY — DUCKBILL VALVE
- DIA V — DIAPHRAGM VALVE
- FLAP — FLAP VALVE
- FLOATIES — FLOAT VALVE
- MED VALVE — MUD VALVE
- QC AIR — QUICK CONNECT AIR HOSE COUPLING
- TELESCOPIC VALVE
- BLASTED — BLAST GATE
- SPECTACLE BLIND (OPEN)
- SPECTACLE BLIND (CLOSED)
- UNCLASSIFIED WRITE TYPE OF BODY ADJACENT TO SYMBOL

CONTROL VALVES

- ROTARY BALL VALVE
- CYLINDER-ACTUATED SINGLE-ACTING
- CYLINDER-ACTUATED DOUBLE-ACTING
- PCV — PRESSURE-REDUCING REGULATOR, SELF-CONTAINED
- PCV — PRESSURE-REDUCING REGULATOR, WITH EXTERNAL PRESSURE TAP
- VALVE W B — VALVE WITH BLEED
- PCV — BACKPRESSURE REGULATOR, SELF-CONTAINED
- PCV — BACKPRESSURE REGULATOR, WITH EXTERNAL PRESSURE TAP
- CONE VALVE
- THREE — THREE-WAY VALVE
- 4 WAY — FOUR-WAY VALVE
- AIR RELEASE VALVE

VALVE ACTUATORS/OPERATORS

- HAND OPERATOR
- DIAPHRAGM OPERATOR
- S, SOL, PY — SOLENOID OPERATOR
- M — MOTOR OPERATOR
- PNEUMATIC CYLINDER
- DIAPHRAGM OPERATOR WITH POSITIONER
- DIAPHRAGM OPERATOR WITH POSITIONER FAIL OPEN
- DIAPHRAGM OPERATOR WITH POSITIONER FAIL CLOSE

MISCELLANEOUS SYMBOLS

- WATER LEVEL SYMBOL
- E — ELECTRICAL HEAT TRACING
- FLOW DIRECTION ARROWS
- WALL
- GRADE

REV	DATE	DESCRIPTION	DRAWN BY	CHECKED BY	APPROVED BY
0	07.17.06	ISSUED FOR APPROVAL	CM	JPM	
1	10/10/06	SYMBOLS CHANGED PER ENGINEER'S COMMENTS	JMP		
2	01/08/07	CHANGES & ADDITIONS PER ENGINEER'S COMMENTS	JMP		

LINE SYMBOLS – PROCESS & INSTRUMENTATION DIAGRAMS

- NEW PROCESS LINES
- EXISTING PROCESS LINES
- ALL OTHER MECHANICAL LINES
- ELECTRIC SIGNAL
- ELECTRICAL BINARY (ON/OFF) SIGNAL
- PNEUMATIC SIGNAL
- PNEUMATIC BINARY SIGNAL
- CAPILLARY TUBING
- HYDRAULIC SIGNAL
- INTERNAL SYSTEM LINK (SOFTWARE OR DATA LINK)
- ELECTROMAGNETIC or SONIC SIGNAL (GUIDED AND NOT GUIDED)
- TELEMETERED SIGNAL
- PACKAGED UNIT
- INSTRUMENT SUPPLY OR CONNECTION TO PROCESS DESIGNATED AS FOLLOWS:
  - AS = AIR SUPPLY
  - ES = ELECTRICAL SUPPLY
  - GS = GAS SUPPLY
  - HS = HYDRAULIC SUPPLY
  - NS = NITROGEN SUPPLY
  - SS = STEAM SUPPLY
  - WS = WATER SUPPLY
- CONTAINMENT

PID STANDARDS

1. DRAWINGS UTILIZE CITY OF WINNIPEG STANDARDS FOR BORDER AND TITLE BLOCK. ALL DRAWINGS ARE PRODUCED ON AUTOCAD (LATEST REV., R2000 OR LATER).
2. ALL UNITS ARE IN METRIC, EXCEPT AS NOTED OTHERWISE. ALL DIMENSIONS SHOWN ARE IN MILLIMETERS (mm).
3. DRAWING CONTENT GENERALLY CONFORMS TO ANSI/ISA STANDARDS S5.1 & S5.3.
4. PID'S INDICATE MAJOR PROCESS PIPING AND EQUIPMENT AND ASSOCIATED LOCAL INSTRUMENTATION, DCS AND OTHER PROCESS I/O.
5. EQUIPMENT INCLUDING VESSELS, DRUMS, EXCHANGERS, HEATERS, PUMPS, COMPRESSORS, ETC. ARE ARRANGED IN SEQUENCE WITH PRINCIPLE FUNCTIONS AND FLOWS.
6. ALL MAJOR EQUIPMENT INCLUDING PUMPS, COMPRESSORS, TANKS, ETC. ARE LABELLED AS TO FUNCTION WITH DESIGN SIZES AND RATINGS.
7. ALL PROCESS LINES ARE LABELLED ACCORDING TO FUNCTION AND SIZE UTILIZING SYSTEM CODES DEFINED HEREIN.
8. EACH SYSTEM INTERCONNECTION POINT BETWEEN DRAWINGS IS LABELLED WITH A SOURCE DRAWING NUMBER OR DESTINATION DRAWING NUMBER. ARROWS ON PROCESS PIPING INDICATE DIRECTION OF FLOW BETWEEN DRAWINGS.

GENERAL NOTES

1. THIS DRAWING IS FOR EQUIPMENT PROCESS FLOW INFORMATION PURPOSES ONLY. ALL EQUIPMENT, COMPONENTS, INSTRUMENTS, DEVICES, PIPING, FITTINGS, VALVES & CONDUIT SHOWN ON THIS DRAWING ARE NOT NECESSARILY SUPPLIED & INSTALLED BY CLORTEC REFER TO CONTRACT DOCUMENTS, CLORTEC SCOPE OF SUPPLIES FOR CLORTEC RESPONSIBILITY IN THIS PROJECT.
2. ALL CLORTEC SUPPLIED PIPING, FITTINGS & VALVES ARE PVC SCH. 80. ALL TUBING ARE BLACK POLYETHYLENE.
3. ELECTRICAL POWER, WATER SUPPLY, POINT OF INJECTION AND SCADA ARE PROVIDED BY OTHERS.
4. ALL UNDER GROUND WORK, CONCRETE WORK, WALL AND ROOF PENETRATIONS ARE DONE BY OTHERS.
5. ALL ELECTRICAL CONDUITS, WIRING ,JUNCTION AND PULL BOXES WILL BE PROVIDED BY OTHERS.
6. THE EQUIPMENT SUPPLIED BY CLORTEC/METCON IS PAINTED AND COATED
7. ALL BACKBOARDS AND SUPPORTS TO BE PROVIDED BY OTHERS.
8. CUSTOMER TO PROVIDE WATER SUPPLY PRESSURE & TEMPERATURE.
9. CUSTOMER TO PROVIDE DETAILLED DOSING ROUTINE.
10. CUSTOMER TO PROVIDE HYPOCHLORITE FEEDING SYSTEM PRESSURE.
11. ALL ELECTRICAL DISCONNECT SWITCHES ARE PROVIDED BY OTHERS.
12. ALL INSTALLATION IS DONE BY OTHERS.

SEVERN TRENT SERVICES
CLORTEC
2660 COLUMBIA STREET TORRANCE, CALIFORNIA 90503
TELEPHONE No: (310) 618-9700 FAX No: (310) 618-1384
WEB SITE: www.severntrentservices.com

UNLESS OTHERWISE NOTED
TOLERANCES:

TYPE:	INCHES	[MM]
FRACTIONS	± 1/8"	
.X	± .1"	± 2.5
.XX	± .01"	± .51
.XXX	± .005"	± .127
ANGLES	± 1°	

NOTICE OF CONFIDENTIALITY
THIS DOCUMENT CONTAINS PROPRIETARY INFORMATION THAT IS AND SHALL REMAIN THE PROPERTY OF CLORTEC AND IS TO BE RETURNED IMMEDIATELY UPON REQUEST. ITS CONTENTS MAY NOT BE REPRODUCED, DISTRIBUTED, CIRCULATED, OR DISCLOSED TO THIRD PARTIES. RECIPIENT WILL NOT USE THIS INFORMATION FOR PURPOSES OTHER THAN INTENDED WITHOUT PRIOR WRITTEN CONSENT OF CLORTEC.

CITY OF WINNIPEG
WATER TREATMENT PLANT
Winnipeg, Canada

PROJECT:

TITLE:
(X3)CT-1500(680 KGS/DAY) RACK MOUNTED
ON-SITE SODIUM HYPOCHLORITE
GENERATION SYSTEM
PIPING & INSTRUMENTATION DIAGRAM

SCALE:	CLORTEC JOB No:	SIZE:	REV:
NTS	CPG0465		2

DWG No: CPG0465-I-01
SHEET: 3 OF 7

REV	DATE	DESCRIPTION	DRAWN BY	CHECKED BY	APPROVED BY
0	07.17.06	ISSUED FOR APPROVAL	CM	JPM	
1	10/10/06	SYMBOLS CHANGED PER ENGINEER'S COMMENTS	JMP		
2	01/08/07	CHANGES & ADDITIONS PER ENGINEER'S COMMENTS	JMP		

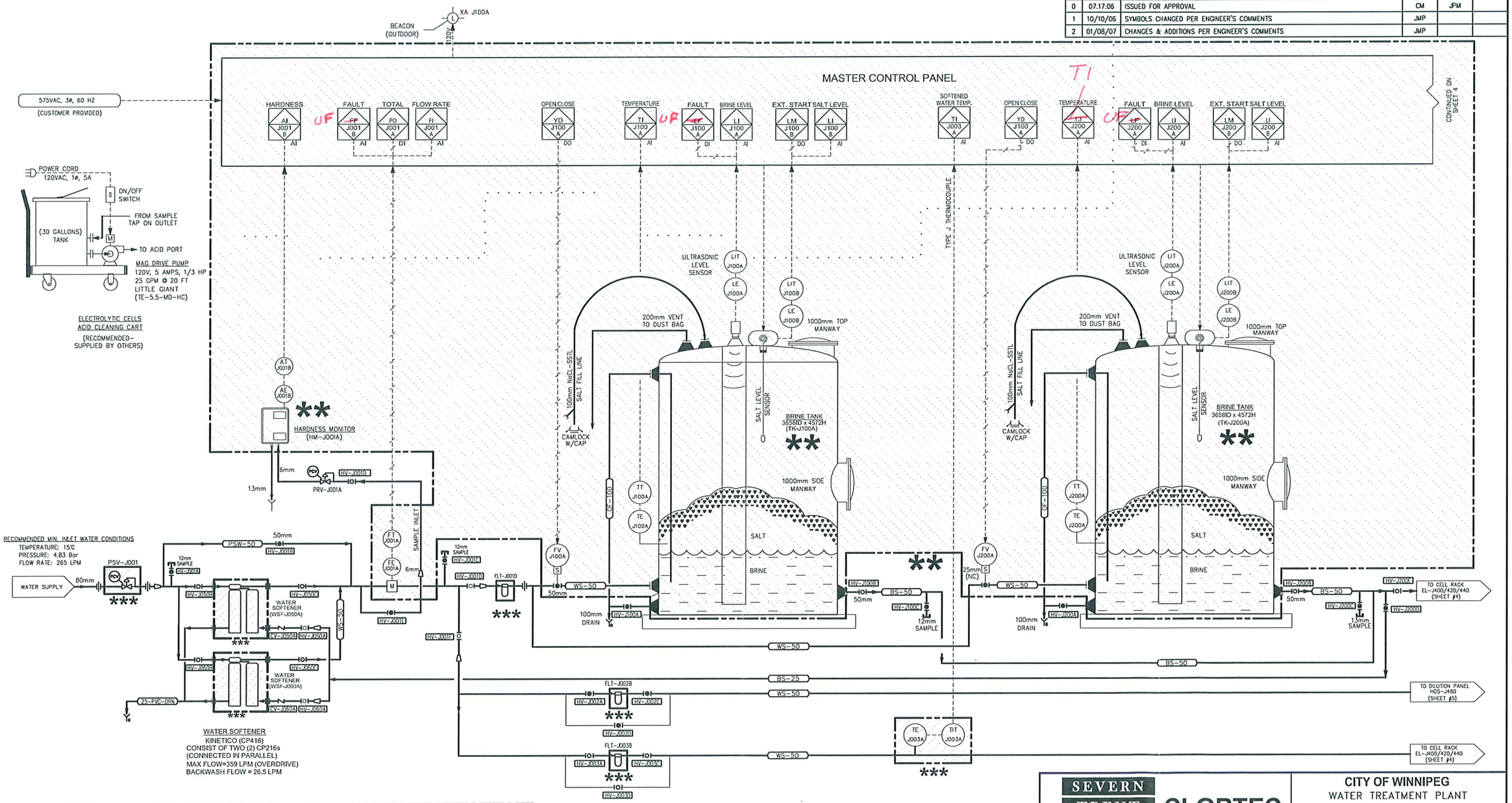

***
ONLY EQUIPMENT MARKED WITH THREE (3) STARS AND WITHIN DASHED BOXES ARE PROVIDED BY CLORTEC.

**
ONLY EQUIPMENT MARKED WITH TWO (2) STARS AND WITHIN DASHED BOXES ARE PROVIDED BY METCON

SEVERN TRENT SERVICES
CLORTEC
2660 COLUMBIA STREET TORRANCE, CALIFORNIA 90503
TELEPHONE No: (310) 618-9700 FAX No: (310) 618-1384
WEB SITE: www.severntrentservices.com

UNLESS OTHERWISE NOTED

TOLERANCES: TYPE:	INCHES	[MM]
FRACTIONS	± 1/8"	
.X	± .1"	± 2.5
.XX	± .01"	± .51
.XXX	± .005"	± .127
ANGLES	± 1°	

NOTICE OF CONFIDENTIALITY
THIS DOCUMENT CONTAINS PROPRIETARY INFORMATION THAT IS AND SHALL REMAIN THE PROPERTY OF CLORTEC AND IS TO BE RETURNED IMMEDIATELY UPON REQUEST. ITS CONTENTS MAY NOT BE REPRODUCED, DISTRIBUTED, CIRCULATED, OR DISCLOSED TO THIRD PARTIES. RECIPIENT WILL NOT USE THIS INFORMATION FOR PURPOSES OTHER THAN INTENDED WITHOUT PRIOR WRITTEN CONSENT OF CLORTEC.

CITY OF WINNIPEG
WATER TREATMENT PLANT
Winnipeg, Canada

PROJECT:

TITLE:
(X3) CT-1500(680KGS./DAY) RACK MOUNTED ON-SITE SODIUM HYPOCHLORITE GENERATION SYSTEM
PIPING & INSTRUMENTATION DIAGRAM

SCALE:	CLORTEC JOB No:	SIZE:	REV:
NTS	CPG0465		2

DWG No: CPG0465-I-01

SHEET: 4 OF 7

REV	DATE	DESCRIPTION	DRAWN BY	CHECKED BY	APPROVED BY
0	07.17.06	ISSUED FOR APPROVAL	CM	JPM	
1	10/10/06	SYMBOLS CHANGED PER ENGINEER'S COMMENTS	JMP		
2	01/08/07	CHANGES & ADDITIONS PER ENGINEER'S COMMENTS	JMP		

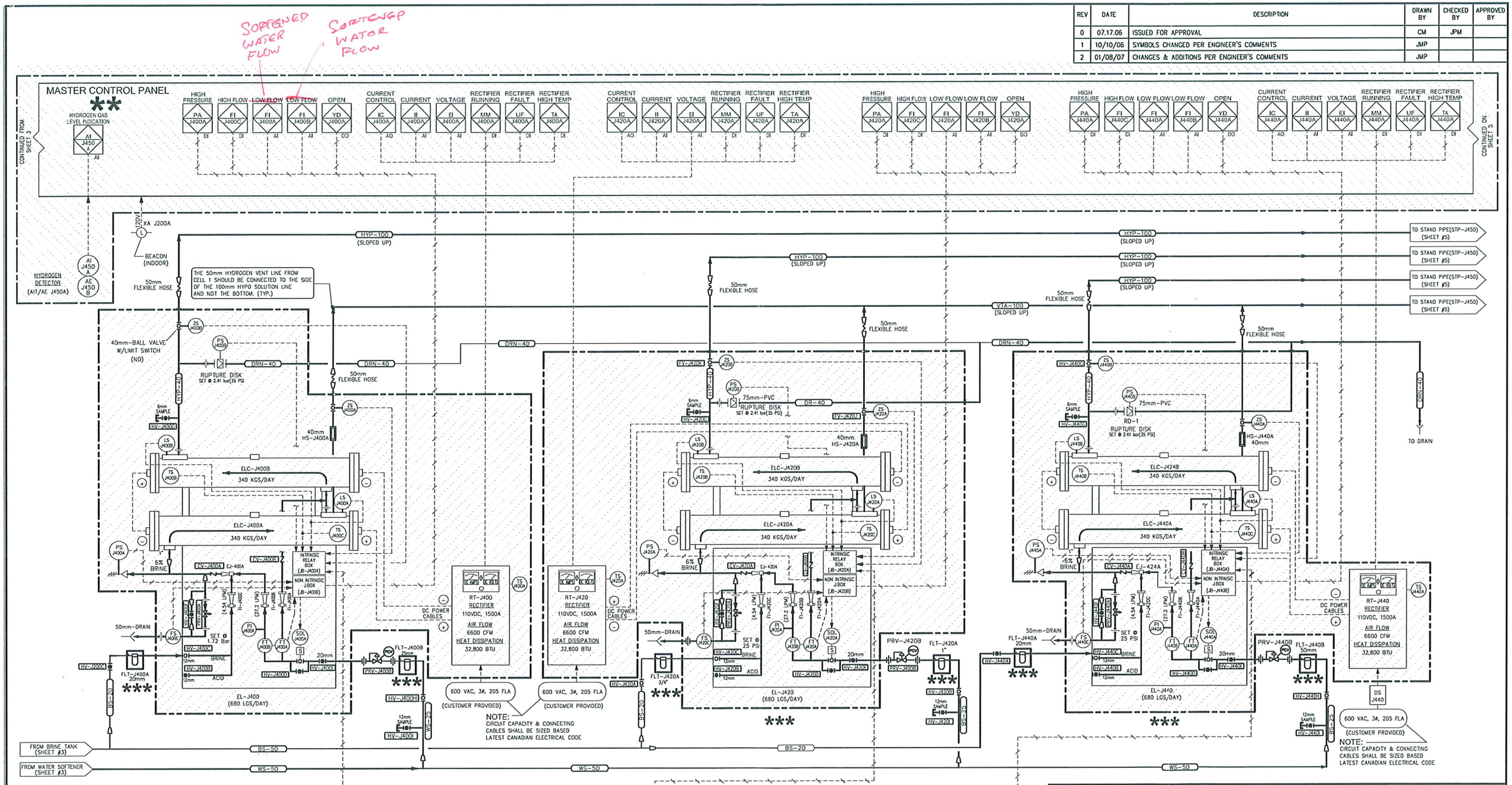

***
ONLY EQUIPMENT MARKED WITH THREE (3) STARS AND WITHIN DASHED BOXES ARE PROVIDED BY CLORTEC.

**
ONLY EQUIPMENT MARKED WITH TWO (2) STARS AND WITHIN DASHED BOXES ARE PROVIDED BY METCON

SEVERN TRENT SERVICES
CLORTEC
2660 COLUMBIA STREET TORRANCE, CALIFORNIA 90503
TELEPHONE No: (310) 618-9700 FAX No: (310) 618-1384
WEB SITE: www.severntrentservices.com

UNLESS OTHERWISE NOTED

TOLERANCES: TYPE:	INCHES	[MM]
FRACTIONS	± 1/8"	
.X	± .1"	± 2.5
.XX	± .01"	± .51
.XXX	± .005"	± .127
ANGLES	± 1°	

NOTICE OF CONFIDENTIALITY

THIS DOCUMENT CONTAINS PROPRIETARY INFORMATION THAT IS AND SHALL REMAIN THE PROPERTY OF CLORTEC AND IS TO BE RETURNED IMMEDIATELY UPON REQUEST. ITS CONTENTS MAY NOT BE REPRODUCED, DISTRIBUTED, CIRCULATED, OR DISCLOSED TO THIRD PARTIES. RECIPIENT WILL NOT USE THIS INFORMATION FOR PURPOSES OTHER THAN INTENDED WITHOUT PRIOR WRITTEN CONSENT OF CLORTEC.

CITY OF WINNIPEG
WATER TREATMENT PLANT
Winnipeg, Canada

PROJECT:

TITLE:
(X3) CT-1500(680KGS./DAY) RACK MOUNTED ON-SITE SODIUM HYPOCHLORITE GENERATION SYSTEM
PIPING & INSTRUMENTATION DIAGRAM

SCALE:	CLORTEC JOB No:	SIZE:	REV:
NTS	CPG0465		2

DWG No:	SHEET:
CPG0465-I-01	5 OF 7

REV	DATE	DESCRIPTION	DRAWN BY	CHECKED BY	APPROVED BY
0	07.17.06	ISSUED FOR APPROVAL	CM	JPM	
1	10/10/06	SYMBOLS CHANGED PER ENGINEER'S COMMENTS	JMP		
2	01/08/07	CHANGES & ADDITIONS PER ENGINEER'S COMMENTS	JMP		

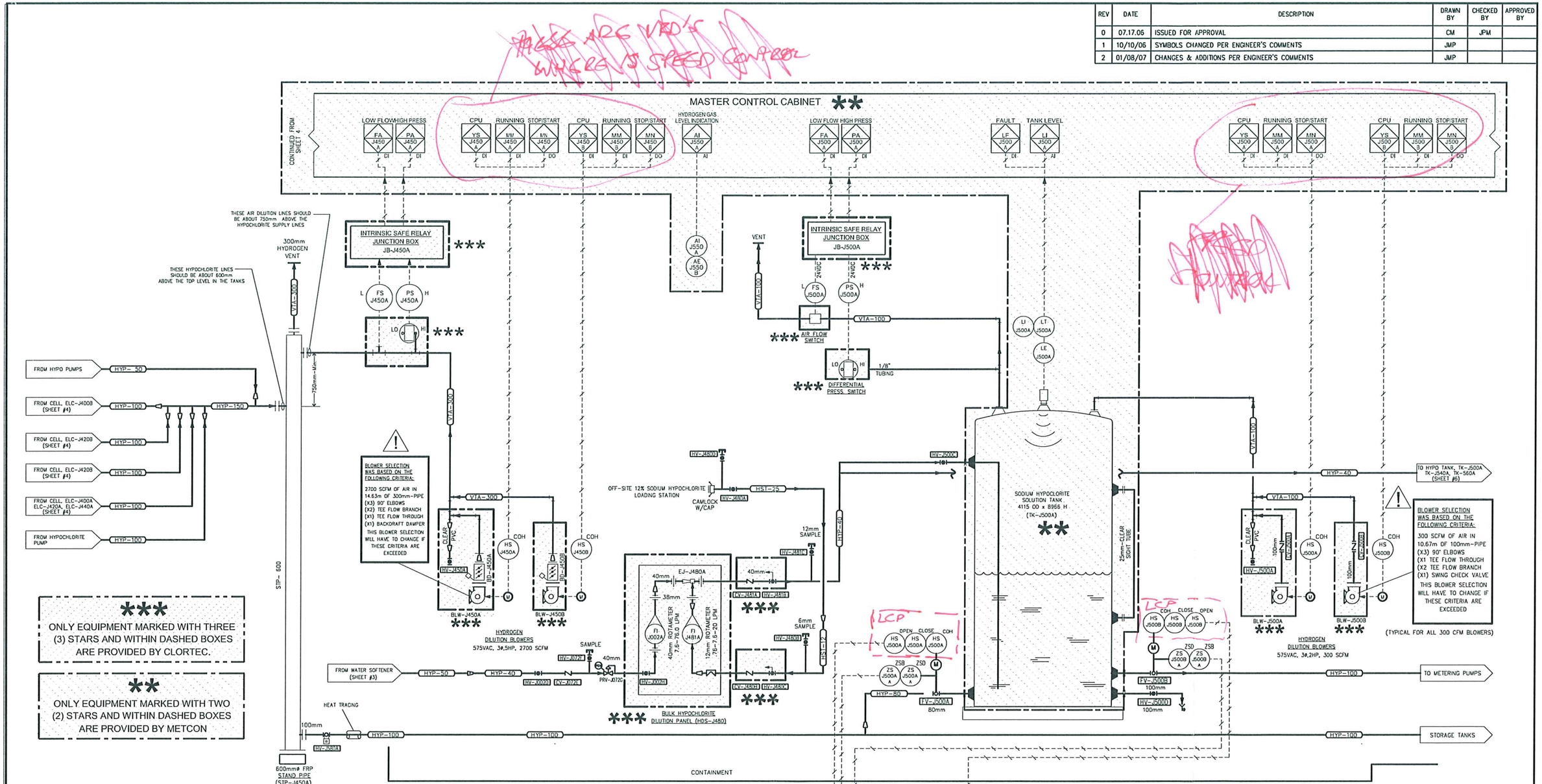

***
ONLY EQUIPMENT MARKED WITH THREE (3) STARS AND WITHIN DASHED BOXES ARE PROVIDED BY CLORTEC.

**
ONLY EQUIPMENT MARKED WITH TWO (2) STARS AND WITHIN DASHED BOXES ARE PROVIDED BY METCON

SEVERN TRENT SERVICES
CLORTEC
2660 COLUMBIA STREET TORRANCE, CALIFORNIA 90503
TELEPHONE No: (310) 618-9700 FAX No: (310) 618-1384
WEB SITE: www.severntrentservices.com

UNLESS OTHERWISE NOTED

TOLERANCES: TYPE:	INCHES	[MM]
FRACTIONS	± 1/8"	
.X	± .1"	± 2.5
.XX	± .01"	± .51
.XXX	± .005"	± .127
ANGLES	± 1°	

NOTICE OF CONFIDENTIALITY
THIS DOCUMENT CONTAINS PROPRIETARY INFORMATION THAT IS AND SHALL REMAIN THE PROPERTY OF CLORTEC AND IS TO BE RETURNED IMMEDIATELY UPON REQUEST. ITS CONTENTS MAY NOT BE REPRODUCED, DISTRIBUTED, CIRCULATED, OR DISCLOSED TO THIRD PARTIES. RECIPIENT WILL NOT USE THIS INFORMATION FOR PURPOSES OTHER THAN INTENDED WITHOUT PRIOR WRITTEN CONSENT OF CLORTEC.

PROJECT: CITY OF WINNIPEG
WATER TREATMENT PLANT
Winnipeg, Canada

TITLE: (X3) CT-1500(680KGS./DAY) RACK MOUNTED ON-SITE SODIUM HYPOCHLORITE GENERATION SYSTEM PIPING & INSTRUMENTATION DIAGRAM

SCALE:	CLORTEC JOB No:	SIZE:	REV:
NTS	CPG0465		2

DWG No: CPG0465-I-01
SHEET: 6 OF 7

REV	DATE	DESCRIPTION	DRAWN BY	CHECKED BY	APPROVED BY
0	07.17.06	ISSUED FOR APPROVAL	CM	JPM	
1	10/10/06	SYMBOLS CHANGED PER ENGINEER'S COMMENTS	JMP		
2	01/08/07	CHANGES & ADDITIONS PER ENGINEER'S COMMENTS	JMP		

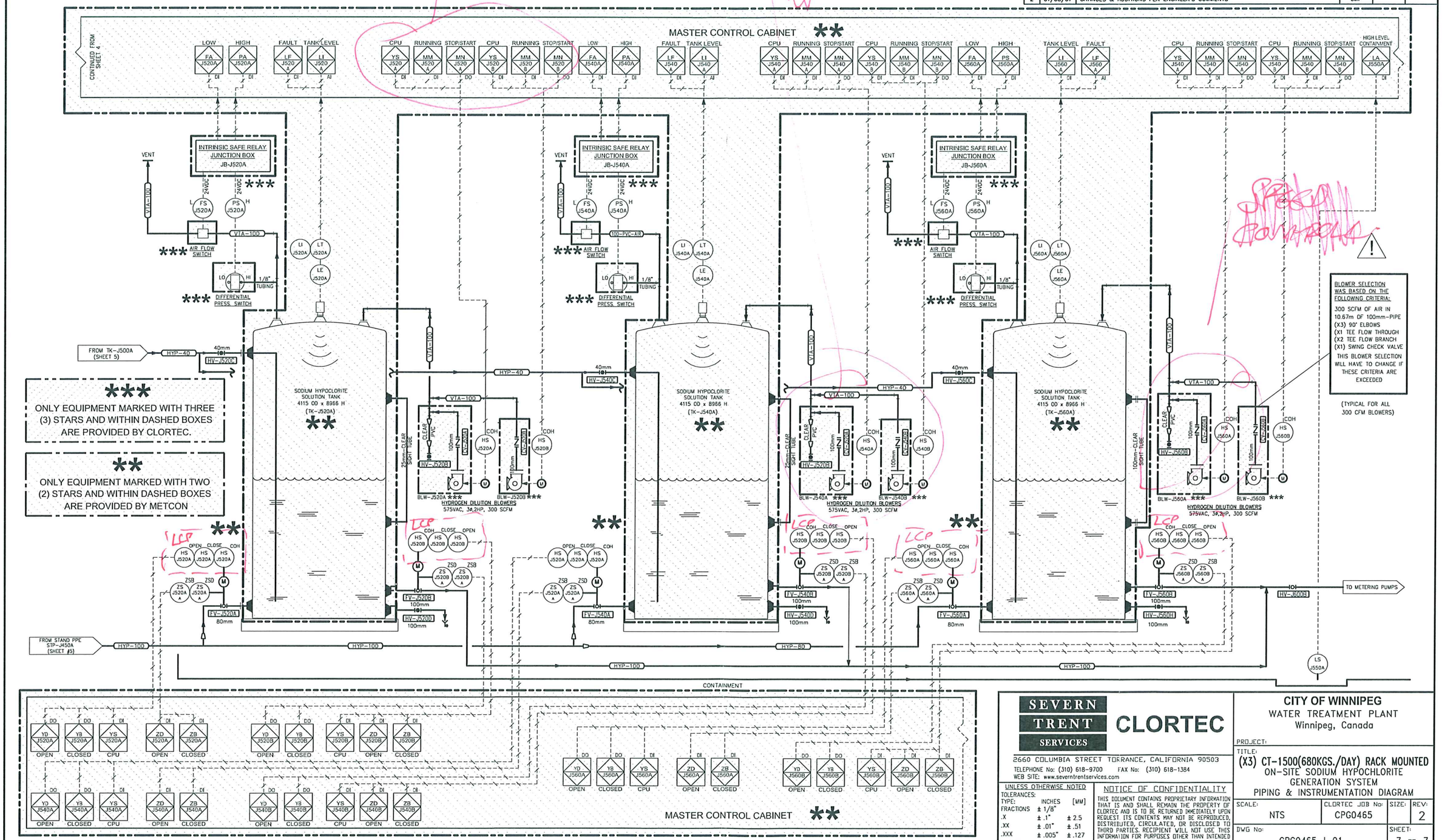

SEVERN TRENT SERVICES

CLORTEC

2660 COLUMBIA STREET TORRANCE, CALIFORNIA 90503
TELEPHONE No: (310) 618-9700 FAX No: (310) 618-1384
WEB SITE: www.severntrentservices.com

UNLESS OTHERWISE NOTED

TOLERANCES: TYPE:	INCHES	[MM]
FRACTIONS	± 1/8"	
.X	± .1"	± 2.5
.XX	± .01"	± .51
.XXX	± .005"	± .127
ANGLES	± 1°	

NOTICE OF CONFIDENTIALITY

THIS DOCUMENT CONTAINS PROPRIETARY INFORMATION THAT IS AND SHALL REMAIN THE PROPERTY OF CLORTEC AND IS TO BE RETURNED IMMEDIATELY UPON REQUEST. ITS CONTENTS MAY NOT BE REPRODUCED, DISTRIBUTED, CIRCULATED, OR DISCLOSED TO THIRD PARTIES. RECIPIENT WILL NOT USE THIS INFORMATION FOR PURPOSES OTHER THAN INTENDED WITHOUT PRIOR WRITTEN CONSENT OF CLORTEC.

CITY OF WINNIPEG
WATER TREATMENT PLANT
Winnipeg, Canada

PROJECT:

TITLE:
(X3) CT-1500(680KGS./DAY) RACK MOUNTED ON-SITE SODIUM HYPOCHLORITE GENERATION SYSTEM
PIPING & INSTRUMENTATION DIAGRAM

SCALE:	CLORTEC JOB No:	SIZE:	REV:
NTS	CPG0465		2

DWG No: CPG0465-I-01

SHEET: 7 OF 7

Section
2

CT-1500 ASSEMBLY & COMPONENTS

Assembly Drawing

Eductor

Flow Sensor

Flow Meter

Solenoid Valve

Pressure Switch

Pressure Relief Valve

Flow Switch

Rupture Disk

Ball Valve

CT Temperature Switch

CT Level Switch

REV	DATE	DESCRIPTION	DRAWN BY	CHECKED BY	APPROVED BY
01	8.03.05	ISSUED FOR APPROVAL	BCW	JPM	CP
02	4.11.06	ADDED JUNTION BOX CALLOUTS	BCW	JPM	CM
03	5/31/06	ADDED VALVE TO HYDROGEN VENT	JB		
04	7/28/06	CHG FLOW VALVES TO UNIONS & CHG HYPO LINE TO 1" CHG STRAPS	JB		

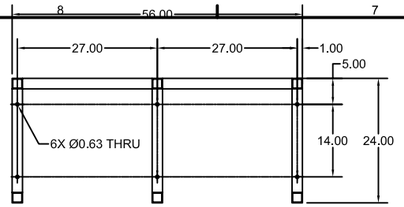

SECTION A-A

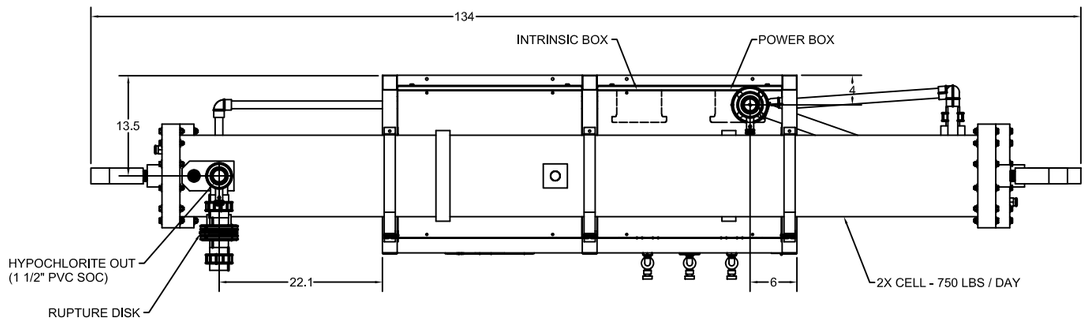

TOP VIEW

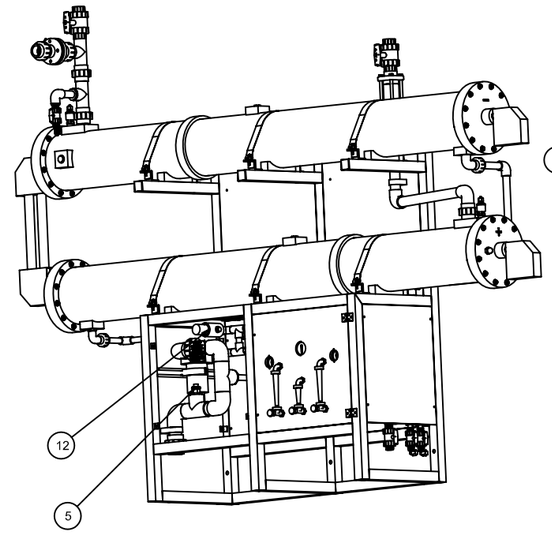

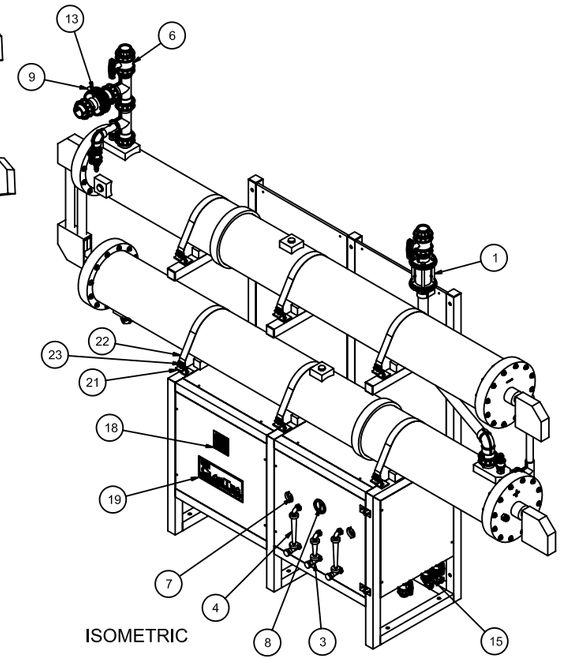

ISOMETRIC

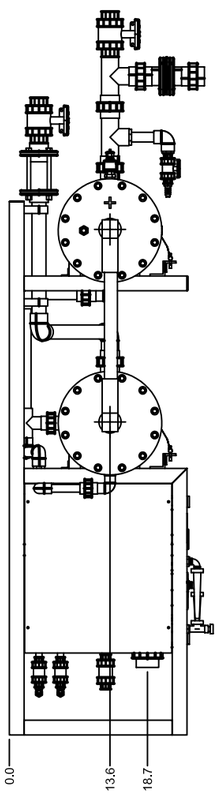

LEFT SIDE VIEW

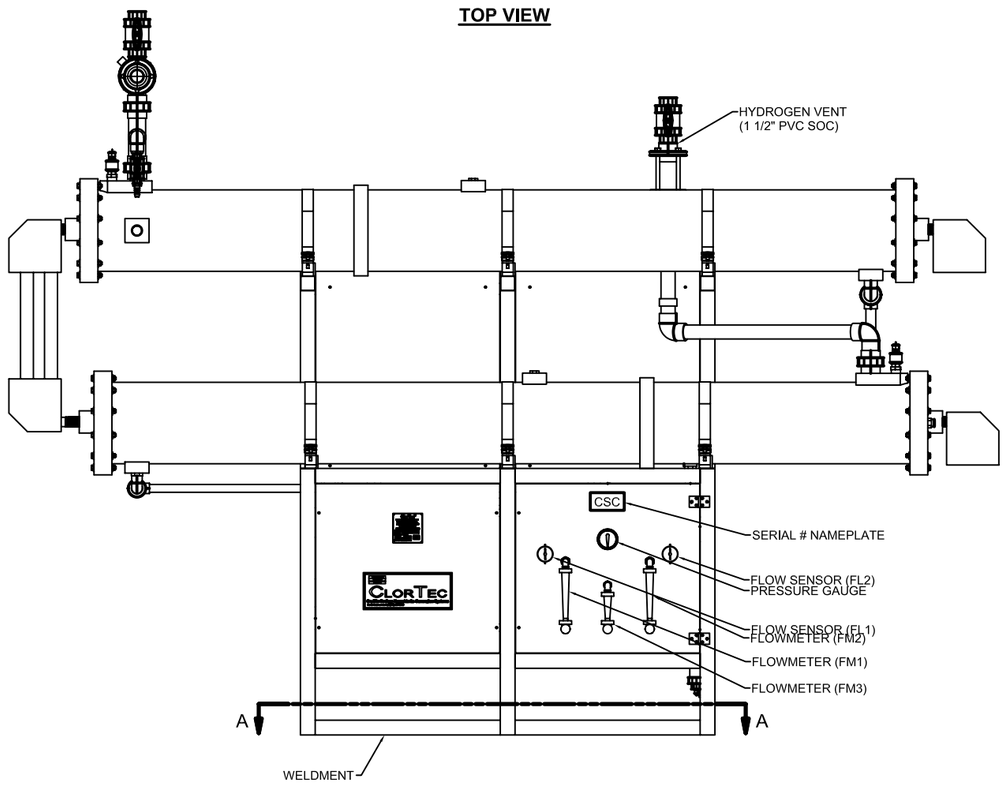

FRONT VIEW

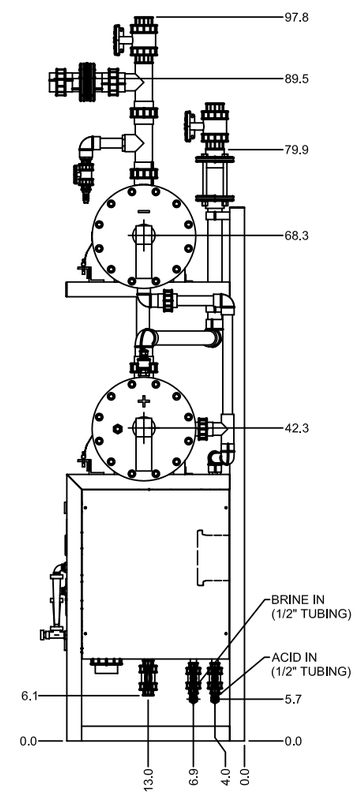

RIGHT SIDE VIEW

Parts List

ITEM	QTY	DESCRIPTION	PART NUMBER
1	1	HYDROGEN SEPERATOR,1 1-2 IN	1300-007
2	1	SOLENOID VALVE,1" FPT,110V	5600-504
3	1	FLOWMETER,0.2-2 GPM	8000-010A
4	2	FLOWMETER,1-10 GPM	8000-019
5	1	SWITCH,FLOW,150PSI,1"	8000-050
6	2	VALVE,BALL,TU,MTM,1 1/2",PVC,SCH 80	5500-590
7	2	FLOW SENSOR,PP,1/2",0-10VDC,1.5-12	5800-399
8	1	GAUGE,PRESS,SS,0-60,2 1/2,1/4 NPT,LBM	8000-012
9	1	RUPTURE DISK,1 1/2",35 PSI	5500-613
10	1	EDUCTOR,SOC,1/2",CT1500	5600-539
11	1	VALVE,PRESSURE RELIEF,2"	5500-600
12	1	SWITCH,PRESSURE,1/2"	5500-594
13	2	GASKET,RUPTURE DISK,1 1/2"	5800-084
14	3	VALVE,CHECK,3/4",PVC,SCH 80	5900-162
15	4	VALVE,BALL,TU,1/2",PVC,SCH 80	5900-270
16	2	VALVE,BALL,TU,3/4",PVC,SCH 80	5800-158
18	1	PLATE,NAME/SERIAL CUSOM BLK,4"x4"	5200-100
19	1	LABEL,CLORTEC,PLASTIC,5"x12"	5600-756
20	1	HOSE,REINFORCED,CLEAR,3/4"x30.00L	5800-286
21	6	BRACKET, STRAP, ELECTROLYDIC CELL, CT450-1500	5600-809
22	6	STRAP, ELECTROLITIC CELL, CT-450-1500	5600-776
23	6	SCREW, 1-1/2, THUMB, KNURLED, SS.	5601-031

SEVERN TRENT SERVICES
2660 Columbia St, Torrance, California 90503 USA (Tel.) 310-618-8700 (Fax.) 310-618-8339
www.severntrentservices.com

ALL INFORMATION CONTAINED WITHIN THIS DOCUMENT IS THE SOLE PROPERTY OF SEVERN TRENT SERVICES AND SHALL NOT TRANSFERED, COPIED OR MANUFACTURED WITHOUT THE WRITTEN PERMISSION OF SEVERN TRENT SERVICES.

CLORTEC

PROJECT:

DETAIL:

TOLERANCES: UNLESS OTHERWISE SPECIFIED

MACHINE TOLERANCES: .X ±.001 .XX ±.010 .XXX ±.005 CONCENTRICITY ±.005 ANGLES ±.12

SHEET METAL TOLERANCES: .X ±.05 .XX ±.031 .XXX ±.015 CONCENTRICITY ±.015 ANGLES ±1

DO NOT SCALE DRAWING

TITLE:

CT1500 (1500LBS/DAY) ON SITE HYPOCHLORITE GENERATOR RACK ASSY,56"W:24"Dx

PREPARED BY:	DATE:	CHECKED BY:	DATE:	PROJECT DRAWING NO:	REVISION:
bworsley	1/20/2006			CTRA-1500-01	04

MATERIAL: SCALE: SHEET NO: 1 OF 1

N:\PROJECT-Released\2006\RACK\CTRA-1500-01 E.L. SMITH (CPG0411)\CTRA-1500-01 (REV3).iam

Sizes and Dimensions for B-100 Pardee Eductor

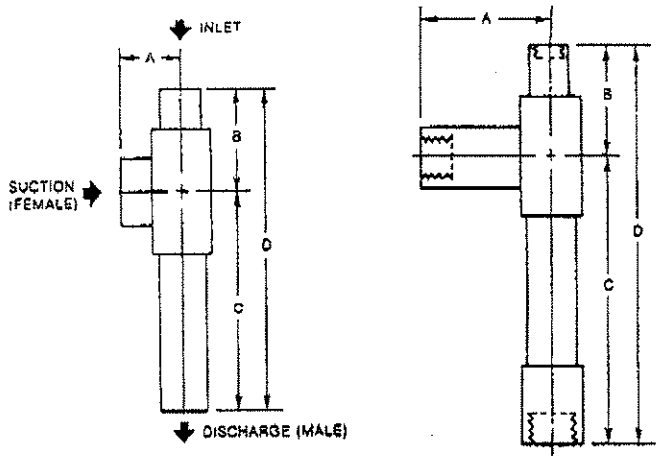

SOCKET THREADED

SIZE	NOMINAL PIPE SIZE		DIMENSIONS (SOCKET)				DIMENSIONS (THREADED)			
	INLET	SUCT. & DISCH.	A	B	C	D	A	B	C	D
½	½"	½"	1⅜"	2¼"	3½"	5¾"	1⅜"	3⅜"	4⅜"	8"
¾	½"	¾"	1¾"	2⅝"	4¼"	6⅞"	1¾"	3¾"	5½"	9¼"
1	¾"	1"	1⅞"	2⅞"	4¾"	7⅝"	1⅞"	4⅛"	6⅛"	10¼"
1¼	1"	1¼"	2¼"	3⅜"	6"	9¼"	2¼"	4¾"	7½"	12½"
1½	1"	1½"	2½"	3⅝"	7⅛"	10⅜"	2½"	5"	8¾"	13⅝"
2	1½"	2"	2⅞"	4¼"	8⅞"	13"	2⅞"	5⅞"	10⅝"	16⅞"
2½	1½"	2½"	3⅜"	4¾"	10⅛"	14¾"	3⅜"	6⅝"	12¼"	18⅝"
3	2"	3"	3¾"	5¼"	11⅜"	16⅝"	3¾"	7"	13½"	20½"

DIMENSIONS ARE APPROX.

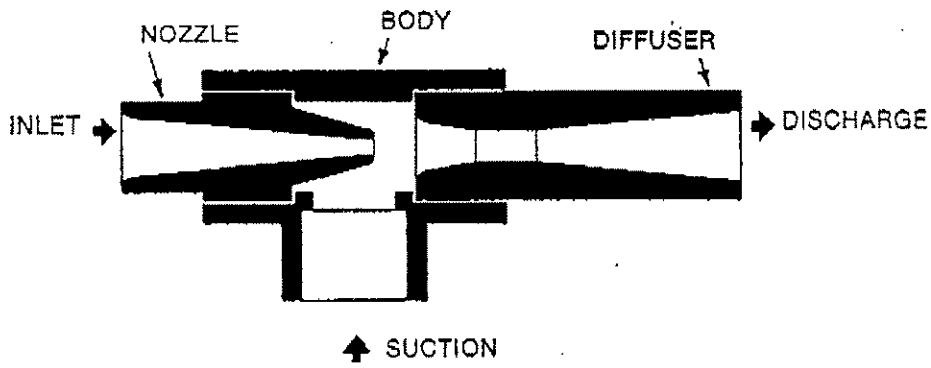

NOTE: Nozzle and diffuser are not removable

PARDEE ENGINEERING
9751 N.W. 91 COURT. MIAMI, FLORIDA 33178
PHONE:(305)885-8835 . FAX:(305) 885-8449

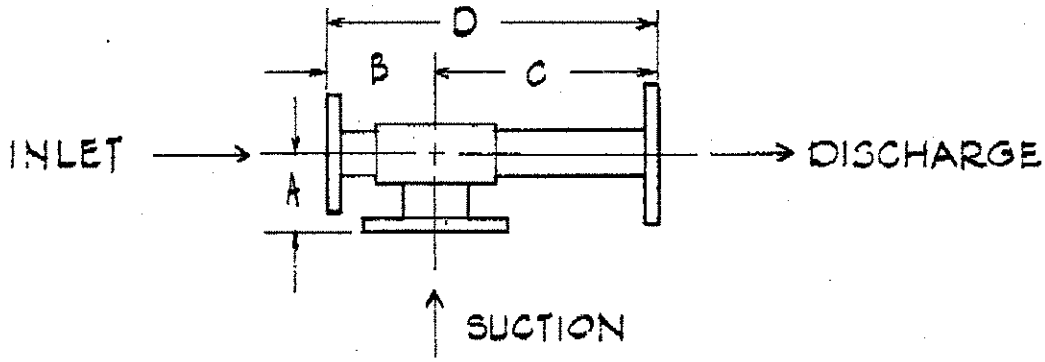

SIZE	N.P.S. INLET	N.P.S. SUCTION	N.P.S. DISCH.	DIMENSIONS A	DIMENSIONS B	DIMENSIONS C	DIMENSIONS D
1/2	1/2"	1/2"	1/2"	2 3/8"	2 3/8"	3 5/8"	6"
3/4	1/2"	3/4"	3/4"	2 7/8"	2 3/4"	4 3/8"	7 1/8"
1	3/4"	1"	1"	3 1/8"	3"	4 7/8"	7 7/8"
1 1/4	1"	1 1/4"	1 1/4"	3 5/8"	3 1/2"	6 1/8"	9 5/8"
1 1/2	1"	1 1/2"	1 1/2"	4"	3 3/4"	7 1/4"	11"
2	1 1/2"	2"	2"	4 1/2"	4 3/8"	9"	13 3/8"
2 1/2	1 1/2"	2 1/2"	2 1/2"	5 1/4"	4 7/8"	10 1/4"	15 1/8"
3	2"	3"	3"	5 3/4"	5 3/8"	11 5/8"	17"
4	3"	4"	4"	7 1/8"	6 3/4"	16 1/2"	23 1/4"
6	4"	6"	6"	9 5/8"	8 7/8"	28 1/8"	37"

DIMENSIONS ARE APPROXIMATE

NEW ADDRESS: PARDEE ENGINEERING
9751 N.W. 91 Ct. MIAMI, FL 33178
PHONE: (305) 885-8835 FAX: (305) 885-8449

STANDARD FLG'D. PVC EDUCTOR

PARDEE ENGINEERING
935 PARDEE STREET
BERKELEY, CA 94710

13-Aug'81

A-2286

Series 550 (63mm) Liquid-Filled Pressure Gauges

DESCRIPTION

U.S. Gauge Series 550 Liquid-Filled Pressure Gauges are designed to resist pulsation, shock, vibration, weather, and most corrosive atmospheres. These gauges are ideally suited to a broad range of plant, process, hydraulic, and fluid power applications.

Series 550 Liquid-Filled Gauges feature a stainless steel case and a wide choice of Bourdon tube and connection materials to meet specific requirements. A variety of case configurations also provide mounting versatility: LM - low connect for stem mounting; CBM - center back connect for stem or U-clamp panel mounting; LBM - low back connect for front-flange or U-clamp panel mounting.

Series 550 Pressure Gauges also feature a unique multi-function plug which serves as a vent, pressure relief, and liquid-fill access. Socket connections are sealed to the case with a *BUNA N* gasket.

Series 550 Pressure Gauges are also available dry (unfilled) from stock, through local U.S. Gauge distributors.

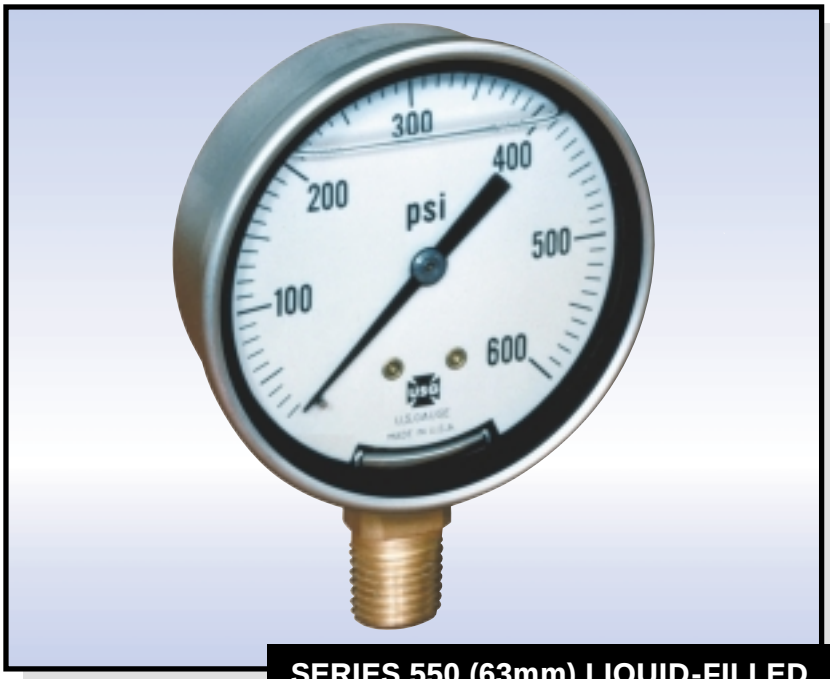

SERIES 550 (63mm) LIQUID-FILLED PRESSURE GAUGES

MODEL SELECTION CHART

MODEL NUMBER	MOUNTING	CONNECTION*	SOCKET	BOURDON TUBE	CASE	RING
550L	Stem	1/4 Inch NPT LM	316 SST	316 SST	Stainless Steel	Crimped SST
555L	Stem	1/4 Inch NPT LM	Brass	Phosphor Bronze*	Stainless Steel	Crimped SST
559L	Stem†	1/4 Inch NPT CBM	Brass	Phosphor Bronze*	Stainless Steel	Crimped SST
551L	Front Flange Panel	1/4 Inch NPT LBM	316 SST	316 SST	Stainless Steel	Crimped SST
552L	U-Clamp Panel	1/4 Inch NPT LBM	316 SST	316 SST	Stainless Steel	Crimped SST
556L	Front Flange Panel	1/4 Inch NPT LBM	Brass	Phosphor Bronze*	Stainless Steel	Crimped SST

†559 can be panel mounted using accessory U-clamp kit. **Bourdon tube is beryllium copper in vacuum, 0 to 15 psi, 0 to 1500 psi, and 0 to 5000 psi thru 0 to 10,000 psi ranges.*

U.S. GAUGE • 900 Clymer Avenue, Sellersville, PA 18960 U.S.A. • Tel: (215) 257-6531 • FAX: (215) 257-3058 • www.ametekusg.com

Series 550 (63mm) Liquid-Filled Pressure Gauges

SPECIFICATIONS

DIAL SIZE: 2-1/2 inch (63mm)

CASE AND RING:
For Stem Mounting:
300 Series stainless steel, solid back case with crimped stainless steel ring. *BUNA N* multi function plug with removable nipple for venting, pressure relief and liquid-fill access. (Model 550L & 555L) Model 559L, CBM may also be stem mounted.

For Front Flange Panel Mounting:
Same construction as above except unit incorporates stainless steel front flange (3 hole DIN) for flush panel mounting. (Model 551L & 556L)

For U-Clamp Panel Mounting:
Same construction as stem mount except unit incorporates stainless steel U-clamp. Accessory U-clamp kit available for panel mounting. Model 559L (CBM) gauge (Model 552L)

WINDOW: Polycarbonate, sealed to case with *BUNA N* gasket and secured with permanent "crimped" ring

DIAL: White painted aluminum

POINTER: Black coated aluminum

MOVEMENT: Brass (except Model 550L, 551L, 552L use GLASSTUF with stainless steel link and link rivets)

BOURDON TUBE: Phosphor bronze, beryllium copper or 316 stainless steel (see Model Selection Chart)

SOCKET CONNECTION: Stainless steel or brass (see Model Selection Chart)

RESTRICTOR: Push type 400 to 4000 psi; Screw type 5000 to 10,000 psi

RANGE: 30 inch - 0 Hg VAC (ccw rotation with increased vacuum)
COMPOUND: 30 inch Hg VAC-0-15, 30, 60, 100, 150 psi
GAUGE: 0 to 15, 30, 60, 100, 160, 200, 300, 400, 600, 1000, 1500, 2000, 3000, 4000, 5000, 6000, 10,000 psi

ACCURACY: ± 3-2-3% of span

SEALS: *BUNA N*

LIQUID FILL: Standard liquid fill is glycerin, but silicone and mineral oils are available. Dry gauges are available as off-the-shelf stock through local distributors.

SPECIFICATIONS SUBJECT TO CHANGE WITHOUT NOTICE

DIMENSIONS

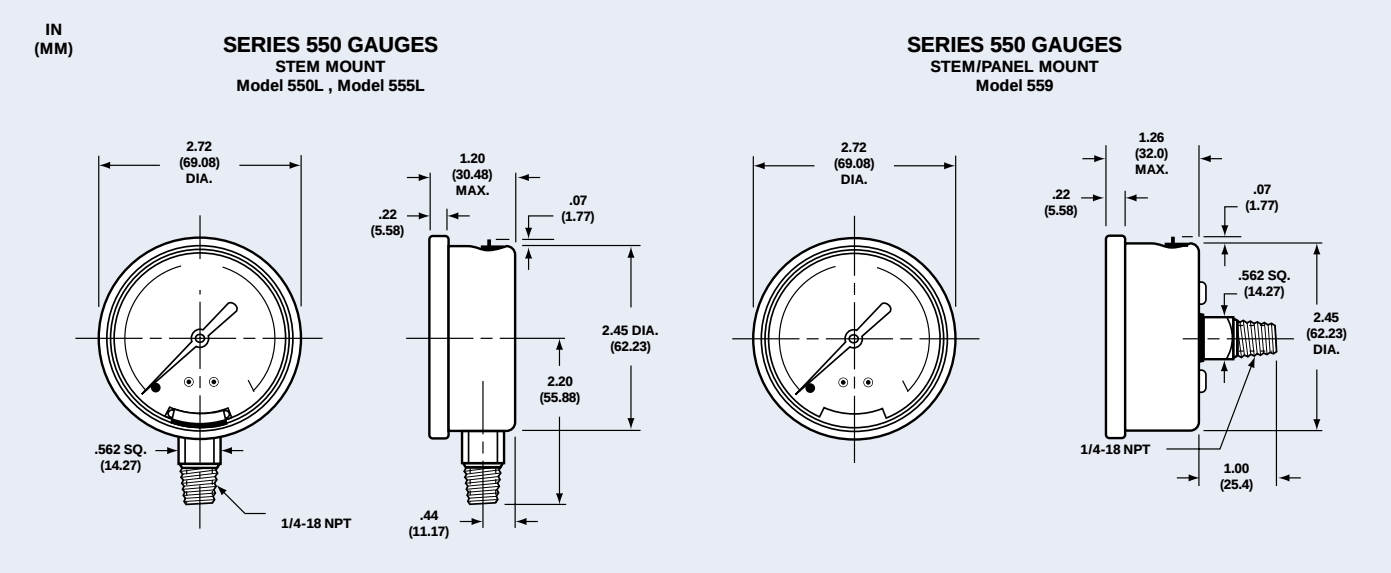

AMETEK®
U.S. GAUGE
900 CLYMER AVENUE • SELLERSVILLE, PENNSYLVANIA 18960 U.S.A.
TEL: (215) 257-6531 • FAX: (215) 257-3058 • www.ametekusg.com

ISO 9001 QS 9000 REGISTERED MANUFACTURER
© 2000, by AMETEK, Inc. All rights reserved.
2.5M1100N (160112)
Printed in the U.S.A. on recycled paper

FLOW SENSORS

RFA Types
Flow Rate Monitoring

PDF Catalog Page

- Accurate Flow Rate Indication with Integral Visual Confirmation
- 0-10 VDC Analog Signal @ 1 mA Max.

GEMS Sensors popularized the RotorFlow's paddlewheel design by combining high visibility rotors with solid-state electronics that are packaged into compact, panel mounting housings. They provide accurate flow rate output with integral visual confirmation...all with an unprecedented price/performance ratio.

Typical Applications:

- Water Purification/Dispensing Systems
- Chemical Metering Equipment
- Lasers and Welders
- Water Injection Systems
- Semiconductor Processing Equipment
- Chillers and Heat Exchangers

Specifications:

Wetted Materials	
- Body	Brass, Stainless Steel or Polypropylene (Hydrolytically Stable, Glass Reinforced)
- Rotor Pin	Ceramic
- Rotor	PPS Composite, Black*
- Lens	Polysulfone
- O-Ring	Viton® (Alloy Bodies); Buna N (Polypropylene Body)
- Low Flow Adaptor	Glass Reinforced Polypropylene
Operating Pressure, Maximum	
- Brass or Stainless Steel Body	200 PSIG @ 70°F
- Polypropylene Body	100 PSIG @ 70°F, 40 PSI Max. @ 180°F
Operating Temperature,	
- Brass or Stainless Steel Body	-20°F to 212°F (-29°C to 100°C)
- Polypropylene Body	-20°F to 180°F (-29°C to 82°C)
Electronics	150°F (65°C) Ambient
Viscosity, Maximum	200 SSU
Input Power	24 VDC, ±10%
Output Signal	0-10 VDC Analog Signal @ 1mA, Max.
Current Consumption	25 mA, Max.

Current Source Output, Max.	70 mA
Frequency Output Range	25 Hz (Low Flow) to 225 Hz (High Flow)
Accuracy	See Table. Page K-6
Electrical Termination	22 AWG PVC-Jacketed, 24" Cable. Color Coded: Red = +VDC, Black = Ground, White = Signal Output

*Standard on Stainless Steel bodies.

How To Order:
Simply click on any highlighted part number in the chart below. The pricing and lead time will be displayed on a new page; enter the quantity you need and the item will be added to your shopping cart.

Body Material	Port Size NPT	Low Range (Accuracy)	Part Number	Standard Range (Accuracy)	Part Number
Polypropylene	.25 in.	0.1 to 1.0	170290	0.5 to 5.0	170280
Polypropylene	.50 in.	1.5 to 12.0	170291	4.0 to 20.0	170281
Brass	.25 in.	0.1 to 1.0	170292	0.5 to 5.0	170282
Brass	.50 in.	1.5 to 12.0	170293	4.0 to 20.0	170283
Brass	.75 in.			5.0 to 30.0	180407
Brass	1.00 in.			8.0 to 60.0	182098
Stainless Steel	9/16 in. - 18	0.1 to 1.0	170295	0.5 to 5.0	170285
Stainless Steel	.50 in.	1.5 to 12.0	170296	4.0 to 20.0	170286
Stainless Steel	.75 in.			5.0 to 30.0	182097
Stainless Steel	1.00 in.			8.0 to 60.0	182099

Instruction, Operation and Maintenance bulletin (PDF)
*With use of Low Flow Adapter supplied.
**Straight thread with O-ring seal.

Note:
Improved accuracy can be achieved by calibrating the individual RFO unit with the external controller indicator.

Dimensions:

Polypropylene Bodies

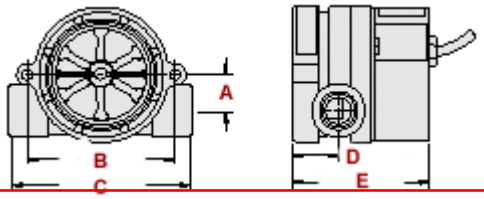

A .64" (16.3 mm)
B 2.50" (63.5 mm)
C 3.06" (77.7 mm)
D .80" (20.3 mm)
E 2.38" (60.5 mm)

Brass and Stainless Steel Bodies - .25" and .50" Port

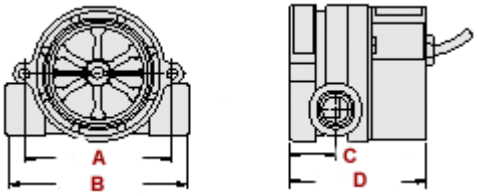

A 2.50" (63.5 mm)
B 3.01" (76.4 mm)
C 1/4" ports = .80" (20.3 mm)
1/2" ports = .87" (22.1 mm)
D 2.32" (58.9 mm)

Brass and Stainless Steel Bodies - .75" and 1.00" Port

Blue-White Industries, Ltd.

Technical Data Sheet

F-450N Series Flowmeter & Solarmeter®

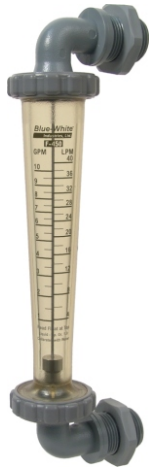

F-45750LHNE-12
Panel Mount

F-45750LEA-12
Adjustable Panel Mount

F-457500LHBN-8
IN-LINE
Solarmeter®

F-450N Features:

- Tough Polysulfone meter body resists high temperatures and pressures.
- 4" approximate scale length for easy reading.
- Direct reading permanent scale.
- In-line or Panel mount configurations available.
- SolarMeters® available with brass connections.
- Optional integral flow adjustment valve.
- Standard models #316 stainless steel guide rods. (Optional K-series Hastelloy C-276).
- Standard models #316 stainless steel or Teflon float. (Optional K-series Hastelloy C-276 or Teflon).
- Not recommended for direct sunlight.
- Available OEM options: Private labeling, custom calibrations, custom materials.

F-450N Specifications:

Max. Working Pressure: ... 150 psig (10.3 bar) @ 70° F (21° C)
Max. Fluid Temperature: ... 212° F (100° C) @ 0 PSI
Models with PVC Float: . 130° F (54° C) @ 0 PSI
SolarMeters® :..... 240° F (115° C) @ 0 PSI
Full scale accuracy: ..... +/- 5%
Meter body material: ..... Polysulfone
Adapter material..... Polysulfone
SolarMeters® :..... Brass
O-ring seals: ..... Viton
Max. pressure drop: ..... 2 psi
Approximate shipping wt.. ½ lb. (.23 kg)

F-45750LHN-12
In-Line

Standard models for liquid

Pipe Size	Dual Scale Range GPM	Dual Scale Range LPM	Float Material	IN-LINE MOUNT MODEL NUMBER	PANEL MOUNT MODEL NUMBER	PANEL MOUNT ADJUSTABLE MODEL NUMBER
3/8" F/NPT	.1 to 1	.4 to 4	Teflon	F-45375LHN-6	F-45375LHNE-6	F-45375LEA-6
1/2" M/NPT	.1 to 1	.4 to 4	Teflon	F-45375LHN-8	F-45375LHNE-8	F-45375LEA-8
3/8" F/NPT	.2 to 2	1 to 7.5	316 SS	F-45376LHN-6	F-45376LHNE-6	F-45376LEA-6
1/2" M/NPT	.2 to 2	1 to 7.5	316 SS	F-45376LHN-8	F-45376LHNE-8	F-45376LEA-8
3/8" F/NPT	.5 to 5	2 to 20	316 SS	F-45500LHN-6	F-45500LHNE-6	F-45500LEA-6
1/2" M/NPT	.5 to 5	2 to 20	316 SS	F-45500LHN-8	F-45500LHNE-8	F-45500LEA-8
3/4" M/NPT	.5 to 5	2 to 20	316 SS	F-45500LHN-12	F-45500LHNE-12	F-45500LEA-12
3/4" M/NPT	1 to 10	4 to 40	316 SS	F-45750LHN-12	F-45750LHNE-12	F-45750LEA-12

Standard models for Air

Pipe Size	Dual Scale Range SCFM	Dual Scale Range M^3HR	Float Material	IN-LINE MOUNT MODEL NUMBER	PANEL MOUNT MODEL NUMBER	PANEL MOUNT ADJUSTABLE MODEL NUMBER
3/8" F/NPT	1 to 12	2 to 20	316 SS	F-45376GHN-6	F-45376GHNE-6	F-45376GEA-6
1/2" M/NPT	1 to 12	2 to 20	316 SS	F-45376GHN-8	F-45376GHNE-8	F-45376GEA-8
3/4" M/NPT	4 to 48	8 to 80	316 SS	F-45750GHN-12	F-45750GHNE-12	F-45750GEA-12

K-Series - Specially Equipped models for liquid

K-Series models are specially equipped for highly corrosive applications.

Pipe Size	Dual Scale Range GPM	Dual Scale Range LPM	Float Material	IN-LINE MOUNT MODEL NUMBER	PANEL MOUNT MODEL NUMBER	PANEL MOUNT ADJUSTABLE MODEL NUMBER
3/8" F/NPT	.1 to 1	.4 to 4	Teflon	F-45375LHKN-6	F-45375LHKNE-6	F-45375LKEA-6
1/2" M/NPT	.1 to 1	.4 to 4	Teflon	F-45375LHKN-8	F-45375LHKNE-8	F-45375LKEA-8
3/8" F/NPT	.2 to 2	1 to 7.5	Hastelloy	F-45376LHKN-6	F-45376LHKNE-6	F-45376LKEA-6
1/2" M/NPT	.2 to 2	1 to 7.5	Hastelloy	F-45376LHKN-8	F-45376LHKNE-8	F-45376LKEA-8
3/8" F/NPT	.5 to 5	2 to 20	Hastelloy	F-45500LHKN-6	F-45500LHKNE-6	F-45500LKEA-6
1/2" M/NPT	.5 to 5	2 to 20	Hastelloy	F-45500LHKN-8	F-45500LHKNE-8	F-45500LKEA-8
3/4" M/NPT	.5 to 5	2 to 20	Hastelloy	F-45500LHKN-12	F-45500LHKNE-12	F-45500LKEA-12
3/4" M/NPT	1 to 10	4 to 40	Hastelloy	F-45750LHKN-12	F-45750LHKNE-12	F-45750LKEA-12

Solarmeters® for liquid with Brass Adapters

Pipe Size	Dual Scale Range GPM	Dual Scale Range LPM	Float Material	IN-LINE MOUNT MALE NPT MODELS MODEL NUMBER	IN-LINE MOUNT SWEAT MODELS MODEL NUMBER
1/2"	.1 to 1	.4 to 4	Teflon	F-45375LHBN-9	F-45375LHBN-8
1/2"	.2 to 2	1 to 7.5	316 SS	F-45376LHBN-9	F-45376LHBN-8
1/2"	.5 to 5	2 to 20	316 SS	F-45500LHBN-9	F-45500LHBN-8
3/4"	.5 to 5	2 to 20	316 SS	F-45500LHBN-13	F-45500LHBN-12
3/4"	1 to 10	4 to 40	316 SS	F-45750LHBN-13	F-45750LHBN-12

5300 Business Drive, Huntington Beach, CA 92649 ● (ph) 714-893-8529 ● (fx) 714-894-9492 ● (em) sales@blue-white.com

Installation Guideline

Caution: Follow these instructions to avoid failure.

Danger: Wear eye protection when installing or removing flowmeter.

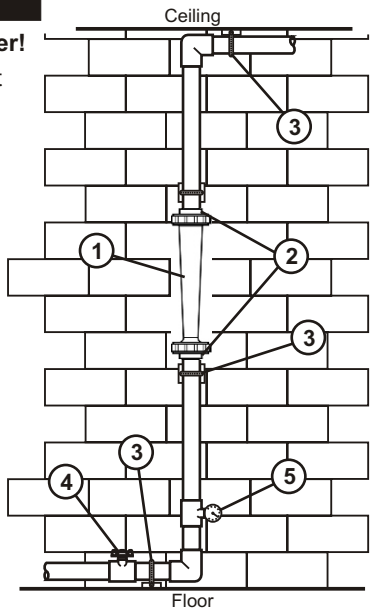

1. Misalignment will damage the meter!

Flowmeter must be installed in an exact vertical plane to ensure accuracy. Be certain of proper plumbing alignments. Misalignment may cause the o-ring seals to leak. The meterbody material can be damaged by UV rays. **Do not install in direct sunlight.**

2. Pipe dope and glue will damage the meter!

Use only Teflon® tape on the threaded adapters. Polysulfone meter body and fittings cannot tolerate PVC Glue and/or pipe dope. Even fumes can cause severe damage. If you are installing your flowmeter to a glued pipe configuration, install the flowmeter *after* all glued fittings are dried and lines are purged of all fumes. **Never** hold the meter body with pliers or like tools. Union nuts should be hand tightened only. **DO NOT OVER-TIGHTEN!**

3. Vibration and heavy loads will damage the meter!

Wall, floor and ceiling mounts and supports must be carefully aligned with the meter body and sturdy enough to support the plumbing and prevent vibration. Never allow the flowmeter to support the weight of related piping.

4. Solenoid valves will damage the meter!

Avoid a system that will impose a sudden burst of flow to the meter. Such a burst will cause the float to impact the float stop with destructive force. Solenoid valves, or other quick opening valves cannot be used unless meter is protected against sudden bursts of flow.

5. High pressures and temperatures will damage the meter!

The maximum acceptable temperature and pressure is interdependent. The maximum acceptable working pressure is dependant on the actual fluid temperature. The maximum acceptable fluid temperature is dependant on the actual working pressure. (see Temperature Vs. Pressure chart).

Maximum Temperature vs. Pressure

F-450N Standard Meters

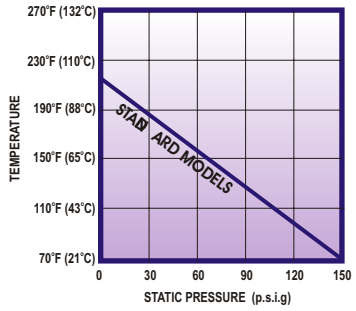

F-450N SolarMeters®

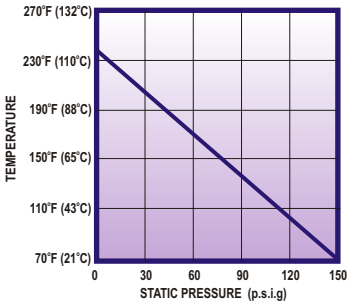

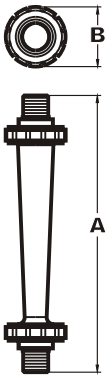

Dimensions
Inline Models

MODEL	A	B
F-45375***-6	8-3/8”	2”
F-45375***-8	8-7/8”	2”
F-45376***-6	8-3/8”	2”
F-45376***-8	8-7/8”	2”
F-45500***-6	8-3/8”	2”
F-45500***-8	8-7/8”	2”
F-45500***-12	8-7/8”	2”
F-45750***-12	10”	2”

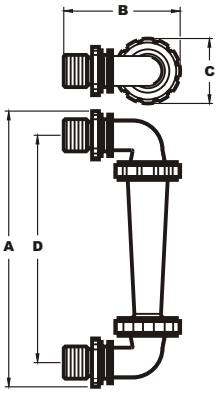

Dimensions
Panel Mount Models

MODEL	A	B	C	D
F-45375	9-7/8”	3-1/8”	2”	8-9/16”
F-45376	9-7/8”	3-1/8”	2”	8-9/16”
F-45500	9-7/8”	3-1/8”	2”	8-9/16”
F-45750	10-1/2”	3-1/4”	2”	9-3/16”

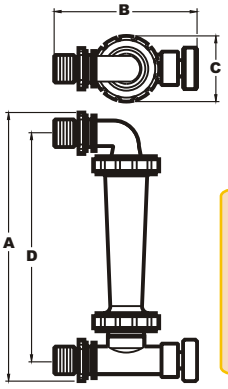

Dimensions
Adjustable Models

MODEL	A	B	C	D
F-45375	9-7/8”	4”	2”	8-9/16”
F-45376	9-7/8”	4”	2”	8-9/16”
F-45500	9-7/8”	4”	2”	8-9/16”
F-45750	10-1/2”	4-1/2”	2”	9-3/16”

F-450N Series Parts

Part Number	Description
F-45011N	3/8” F/NPT In-line Adapter, Polysulfone
F-4441K	3/8” M/NPT 90° Panel mount Elbow, Polysulfone
F-45013N	1/2” M/NPT In-line Adapter, Polysulfone
F-4442K	½” M/NPT 90° Panel mount Elbow, Polysulfone
F-45048N	1/2” M/NPT In-line Adapter, Brass
F-45008N	1/2” SWEAT In-line Adapter, Brass
F-4409	3/4” M/NPT In-line Adapter, Polysulfone
F-4421K	3/4” M/NPT 90° Panel mount Elbow, Polysulfone
F-4425	3/4” M/NPT In-line Adapter, Brass
F-4423	3/4” SWEAT In-line Adapter, Brass
F-4406P	Half Union, Polysulfone
F-4406AL	Half Union, Aluminum
F-4427A	3/8” and 1/2” Panel mount Lock Nut, Polysulfone
F-4428A	3/4” Panel mount Lock Nut, Polysulfone
F-45005	F-45375, F-45376, F-45500 Guide Rod, 316 SS
F-45021	F-45750 Guide Rod, 316 SS
F-45005H	F-45375, F-45376, F-45500 Guide Rod, Hastelloy
F-45021H	F-45750 Guide Rod, Hastelloy
F-4410V	3/8” and 1/2” O-ring seal, Viton
F-4411V	3/4” O-ring seal, Viton
F-45007	3/8” and 1/2” Guide rod holder, Polysulfone
F-45019	3/4” Guide rod holder, Polysulfone

Blue-White Industries, Ltd.

Technical Data Sheet

F-440N Series Flowmeter & Solarmeter®

F-44500LH-8
In-Line

F-440 Features:

- Tough Polysulfone meter body resists high temperatures and pressures.
- Compact size for tight installation spaces.
- 2" approximate scale length for easy reading.
- Direct reading permanent scale.
- In-line or Panel mount configurations available.
- SolarMeters® available with brass connections.
- Optional integral flow adjustment valve.
- Standard models #316 stainless steel guide rods. (Optional K-series Hastelloy C-276).
- Standard models #316 stainless steel or Teflon float. (Optional K-series Hastelloy C-276 or Teflon).
- Not recommended for direct sunlight.
- Available OEM options: Private labeling, custom calibrations, custom materials.

F-440 Specifications:

Max. Working Pressure: ... 150 psig (10.3 bar) @ 70° F (21° C)
Max. Fluid Temperature: ... 212° F (100° C) @ 0 PSI
Models with PVC Float: . 130° F (54° C) @ 0 PSI
SolarMeters® :..... 240° F (115° C) @ 0 PSI
Full scale accuracy: ..... +/- 5%
Meter body material: ..... Polysulfone
Adapter material..... Polysulfone
SolarMeters® :..... Brass
O-ring seals: ..... Viton
Max. pressure drop: ..... 2 psi
Approximate shipping wt.. ½ lb. (.23 kg)

Standard models for liquid

Pipe Size M/NPT	Dual Scale Range GPM	Dual Scale Range LPM	Float Material	IN-LINE MOUNT MODEL NUMBER	PANEL MOUNT MODEL NUMBER	PANEL MOUNT ADJUSTABLE MODEL NUMBER
3/8"	.025 to .250	0.1 to 1.0	PVC	F-44250LH-6	F-44250LHE-6	F-44250LEA-6
1/2"	.025 to .250	0.1 to 1.0	PVC	F-44250LH-8	F-44250LHE-8	F-44250LEA-8
3/8"	0.1 to 1.0	0.4 to 4.0	316 SS	F-44375LH-6	F-44375LHE-6	F-44375LEA-6
1/2"	0.1 to 1.0	0.4 to 4.0	316 SS	F-44375LH-8	F-44375LHE-8	F-44375LEA-8
3/8"	0.2 to 2.0	0.75 to 7.5	316 SS	F-44376LH-6	F-44376LHE-6	F-44376LEA-6
1/2"	0.2 to 2.0	0.75 to 7.5	316 SS	F-44376LH-8	F-44376LHE-8	F-44376LEA-8
3/8"	0.5 to 5.0	1.8 to 18.0	316 SS	F-44500LH-6	F-44500LHE-6	F-44500LEA-6
1/2"	0.5 to 5.0	1.8 to 18.0	316 SS	F-44500LH-8	F-44500LHE-8	F-44500LEA-8
3/4"	1.0 to 10.0	5.0 to 37.5	316 SS	F-44750LH-12	F-44750LHE-12	F-44750LEA-12
	GPH	LPH				
3/8"	3.0 to 30.0	10 to 110	Teflon	F-44330LH-6	F-44330LHE-6	F-44330LEA-6
1/2"	3.0 to 30.0	10 to 110	Teflon	F-44330LH-8	F-44330LHE-8	F-44330LEA-8
3/8"	5.0 to 60.0	20 to 220	316 SS	F-44560LH-6	F-44560LHE-6	F-44560LEA-6
1/2"	5.0 to 60.0	20 to 220	316 SS	F-44560LH-8	F-44560LHE-8	F-44560LEA-8

K-Series - Specially Equipped models for liquid

Pipe Size M/NPT	Dual Scale Range GPM	Dual Scale Range LPM	Float Material	IN-LINE MOUNT MODEL NUMBER	PANEL MOUNT MODEL NUMBER	PANEL MOUNT ADJUSTABLE MODEL NUMBER
3/8"	.025 to .250	0.1 to 1.0	PVC	F-44250LHK-6	F-44250LHKE-6	F-44250LKEA-6
1/2"	.025 to .250	0.1 to 1.0	PVC	F-44250LHK-8	F-44250LHKE-8	F-44250LKEA-8
3/8"	0.1 to 1.0	0.4 to 4.0	Teflon	F-44375LHK-6	F-44375LHKE-6	F-44375LKEA-6
1/2"	0.1 to 1.0	0.4 to 4.0	Teflon	F-44375LHK-8	F-44375LHKE-8	F-44375LKEA-8
3/8"	0.2 to 2.0	0.75 to 7.5	Hastelloy	F-44376LHK-6	F-44376LHKE-6	F-44376LKEA-6
1/2"	0.2 to 2.0	0.75 to 7.5	Hastelloy	F-44376LHK-8	F-44376LHKE-8	F-44376LKEA-8
3/8"	0.5 to 5.0	1.8 to 18.0	Hastelloy	F-44500LHK-6	F-44500LHKE-6	F-44500LKEA-6
1/2"	0.5 to 5.0	1.8 to 18.0	Hastelloy	F-44500LHK-8	F-44500LHKE-8	F-44500LKEA-8
3/4"	1.0 to 10.0	5.0 to 37.5	Hastelloy	F-44750LHK-12	F-44750LHKE-12	F-44750LKEA-12
	GPH	LPH				
3/8"	3.0 to 30.0	10 to 110	Teflon	F-44330LHK-6	F-44330LHKE-6	F-44330LKEA-6
1/2"	3.0 to 30.0	10 to 110	Teflon	F-44330LHK-8	F-44330LHKE-8	F-44330LKEA-8
3/8"	5.0 to 60.0	20 to 220	Teflon	F-44560LHK-6	F-44560LHKE-6	F-44560LKEA-6
1/2"	5.0 to 60.0	20 to 220	Teflon	F-44560LHK-8	F-44560LHKE-8	F-44560LKEA-8

F-44500LHE-8
Panel Mount

F-44500LEA-8
Adjustable Panel Mount

Solarmeters® for liquid with Brass Adapters

Pipe Size	Dual Scale Range GPM	Dual Scale Range LPM	Float Material	IN-LINE MOUNT FEMALE NPT MODEL NUMBER	IN-LINE MOUNT MALE NPT MODEL NUMBER	IN-LINE MOUNT SWEAT MODEL NUMBER
3/8"	0.1 to 1.0	0.4 to 4.0	316 SS	F-44375LHB-7		
1/2"	0.1 to 1.0	0.4 to 4.0	316 SS		F-44375LHB-9	F-44375LHB-8
3/8"	0.2 to 2.0	0.75 to 7.5	316 SS	F-44376LHB-7		
1/2"	0.2 to 2.0	0.75 to 7.5	316 SS		F-44376LHB-9	F-44376LHB-8
3/8"	0.5 to 5.0	1.8 to 18.0	316 SS	F-44500LHB-7		
1/2"	0.5 to 5.0	1.8 to 18.0	316 SS		F-44500LHB-9	F-44500LHB-8
3/4"	1.0 to 10.0	5.0 to 37.5	316 SS		F-44750LHB-13	F-44750LHB-12
	GPH	LPH				
3/8"	3.0 to 30.0	10 to 110	Teflon	F-44330LHB-7		
1/2"	3.0 to 30.0	10 to 110	Teflon		F-44330LHB-9	F-44330LHB-8
3/8"	5.0 to 60.0	20 to 220	316 SS	F-44560LHB-7		
1/2"	5.0 to 60.0	20 to 220	316 SS		F-44560LHB-9	F-44560LHB-8

F-44376LHB-8
IN-LINE
Solarmeter®

5300 Business Drive, Huntington Beach, CA 92649 ● (ph) 714-893-8529 ● (fx) 714-894-9492 ● (em) sales@blue-white.com

Installation Guideline

Caution: Follow these instructions to avoid failure.

Danger: Wear eye protection when installing or removing flowmeter.

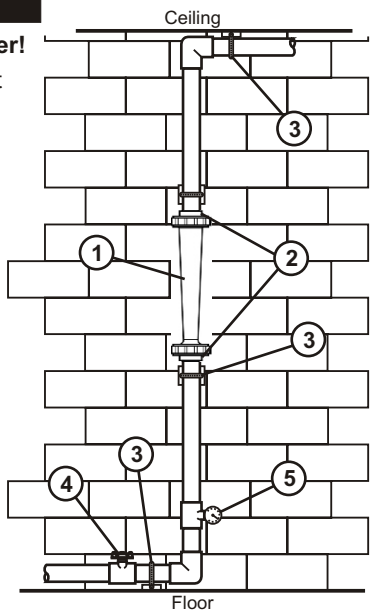

1. Misalignment will damage the meter!

Flowmeter must be installed in an exact vertical plane to ensure accuracy. Be certain of proper plumbing alignments. Misalignment may cause the o-ring seals to leak. The meterbody material can be damaged by UV rays. **Do not install in direct sunlight.**

2. Pipe dope and glue will damage the meter!

Use only Teflon® tape on the threaded adapters. Polysulfone meter body and fittings cannot tolerate PVC Glue and/or pipe dope. Even fumes can cause severe damage. If you are installing your flowmeter to a glued pipe configuration, install the flowmeter *after* all glued fittings are dried and lines are purged of all fumes. **Never** hold the meter body with pliers or like tools. Union nuts should be hand tightened only. **DO NOT OVER-TIGHTEN!**

3. Vibration and heavy loads will damage the meter!

Wall, floor and ceiling mounts and supports must be carefully aligned with the meter body and sturdy enough to support the plumbing and prevent vibration. Never allow the flowmeter to support the weight of related piping.

4. Solenoid valves will damage the meter!

Avoid a system that will impose a sudden burst of flow to the meter. Such a burst will cause the float to impact the float stop with destructive force. Solenoid valves, or other quick opening valves cannot be used unless meter is protected against sudden bursts of flow.

5. High pressures and temperatures will damage the meter!

The maximum acceptable temperature and pressure is interdependent. The maximum acceptable working pressure is dependant on the actual fluid temperature. The maximum acceptable fluid temperature is dependant on the actual working pressure. (see Temperature Vs. Pressure chart).

Maximum Temperature vs. Pressure

F-440 Standard Meters

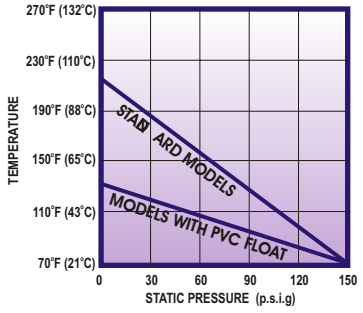

F-440 SolarMeters®

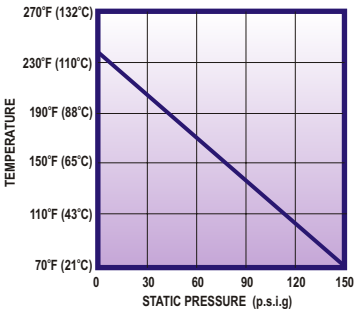

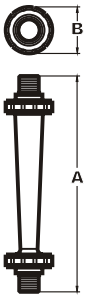

Dimensions
Inline Models

PIPE SIZE	A	B
3/8”	6-3/16”	1-11/16”
1/2”	6-3/16”	1-11/16”
3/4”	7-1/2”	2”

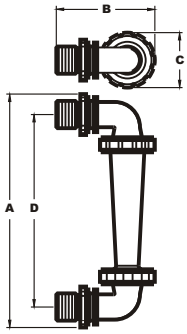

Dimensions
Panel Mount Models

PIPE SIZE	A	B	C	D
3/8”	7”	4-1/2”	1-11/16”	5-15/16”
1/2”	7”	4-1/2”	1-11/16”	5-15/16”
3/4”	8”	4-1/2”	2”	6-13/16”

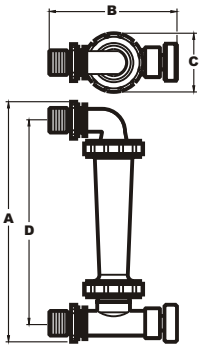

Dimensions
Adjustable Models

PIPE SIZE	A	B	C	D
3/8”	7”	3”	1-11/16”	6”
1/2”	7”	3”	1-11/16”	6”
3/4”	8-1/8”	3”	2”	6-13/16”

F-440 Series Parts

Part Number	Description
F-4407	3/8” M/NPT In-line Adapter, Polysulfone
F-4440K	3/8” M/NPT 90° Panel mount Elbow, Polysulfone
F-4426	3/8” F/NPT In-line Adapter, Brass
F-4408	1/2” M/NPT In-line Adapter, Polysulfone
F-4420P	1/2” M/NPT 90° Panel mount Elbow, Polysulfone
F-4424N	1/2” M/NPT In-line Adapter, Brass
F-4422	1/2” SWEAT In-line Adapter, Brass
F-4409	3/4” M/NPT In-line Adapter, Polysulfone
F-4421K	3/4” M/NPT 90° Panel mount Elbow, Polysulfone
F-4425	3/4” M/NPT In-line Adapter, Brass
F-4423	3/4” SWEAT In-line Adapter, Brass
F-4405P	3/8” and 1/2” Half Union, Polysulfone
F-4406P	3/4” Half Union, Polysulfone
F-4405AL	3/8” and 1/2” Half Union, Aluminum
F-4406AL	3/4” Half Union, Aluminum
F-4427A	3/8” and 1/2” Panel mount Lock Nut, Polysulfone
F-4428A	3/4” Panel mount Lock Nut, Polysulfone
F-4414	3/8” and 1/2” Guide Rod, 316 Stainless Steel
F-4415	3/4” Guide Rod, 316 Stainless Steel
F-4433	3/8” and 1/2” Guide Rod, Hastelloy C-276
F-4434	3/4” Guide Rod, Hastelloy C-276
F-4410V	3/8” and 1/2” O-ring seal, Viton
F-4411V	3/4” O-ring seal, Viton
F-45007	3/8” and 1/2” Guide rod holder, Polysulfone
F-45019	3/4” Guide rod holder, Polysulfone

2-Way Piloted Diaphragm General Service Solenoid Valves

Brass or Polymer Bodies » 3/4” - 3” NPT

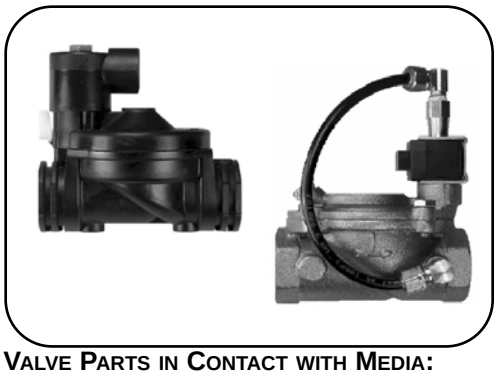

General Information:

The Economy Line of valves offers a reliable, low cost, lightweight and compact alternative to the Industrial Line. These valves are well suited for humid environments and can be inexpensively modified to meet specific requirements.
(These valves are not intended for use in medical life-support, combustion, aerospace or similar applications)

Mounting Position:
Any Position *(best if vertical and upright)*

Actuation Response Time:
1 second to 6 seconds is typical

Electrical Specifications:

Standard Voltages:
AC 50/60 Hz: 24, 120, 240
DC: 12, 24
DC Latching: 12

Coil Rating:
Continuous duty totally encapsulated
Class A Rated 105°C; 221°F

Voltage Tolerances:
±10% of applicable voltage

Standard Lead Length: 18 or 24”

DC Latching Valves:
2-Wire (std): 30-50 ms pulse is required for activation; a reversed polarity pulse required for deactivation. Pulses longer than 50 ms may cause the valve to re-actuate.

Nominal Ambient Temperature Ranges:

0°C to 49°C; 32°F to 120°F

Enclosure Options:

1/2” FPT Conduit (std) - Epoxy potted coil in a glass filled polypropylene housing with integral female conduit connection
1/2” MPT Conduit (120, 240 VAC std) - Fully molded coil in a Valox housing with integral male conduit connection (Class F Rating)
Spade Terminals - Two 1/4” spade terminals integrally molded in a Thermoplastic Polyester housing and open frame design
Din Connection - Form “B” style connection
Canister - Epoxy potted coil in a glass filled nylon canister with two 18” lead wires

Operating Modes Available:

Normally Closed - Closed when de-energized, Open when energized
Normally Open - Open when de-energized Closed when energized

Valve Parts in Contact with Media:

Body - Brass or 30% Glass Filled Nylon
Internals - Brass Valves - Brass, S/S
Plastic Valves - Acetal
Flow Control (Plastic Valves) - 30% GF Nylon
Manual Bleed Lever (Plastic Valves) - Acetal
Base Nut - Brass
Core Tube - S/S T305
Plunger and Core Plug - S/S T430F
Shading Ring (AC units only) -
Copper (Std)
Silver (Special order only)
Springs - S/S T302
Seals - Nitrile
Diaphragm - Nylon Reinforced Nitrile

Options:

• Latching Solenoids Available

Other voltages, coil constructions, lead lengths and materials are available to meet special requirements.

Valve Specifications															Solenoid Specifications	
			Operating Pressure												*Add One Code From Each*	
			Min.		AC Air / Gas / Water Max. (MOPD)		DC Air / Gas / Water Max. (MOPD)		Max. Operating Temp		Coil (Watt)					
Port Size (in)	Orifice Size (in)	Cv Flow Factor	psi	bar	psi	bar	psi	bar	°F	°C	AC	DC	Base Part Number Brass	Base Part Number 30% Glass Filled Nylon	Voltage	Enclosure / Termination
Normally Closed (Closed When De-Energized)															**AC** A205 - 24-50/60 A210 - 110/50-120/60 A223 - 220/50-240/60 **DC** A372 - 12 VDC A375 - 24 VDC	SA - Spade Term LL - Din “B” CB - 1/2” MPT DC - 1/2” FPT CN - Canister
3/4	1	10	10	.7	300	20.7	-	-	180	82.2	5	-	3108B-672CN	-		
1	1	14	10	.7	150	10.5	125	8.5	180	82.2	5	6	-	3110N-662CN		
	1	14	10	.7	180	12.6	125	8.5	180	82.2	5	6	3110B-662CN	-		
	1	14	15	1.2	300	21.0	-	-	180	82.2	5	-	3110B-672CN	-		
1-1/2	1-1/2	40	10	.7	150	10.5	125	8.5	180	82.2	5	6	3116B-692CN	3116N-692CN		
2	2	56	10	.7	150	10.5	125	8.5	180	82.2	5	6	3120B-712CN	3120N-712CN		
3	3	75	10	.7	150	10.5	125	8.5	180	82.2	5	6	3130B-762CN	-		
Normally Open (Open When De-Energized)																
1	1	14	10	.7	150	10.5	100	6.9	180	82.2	5	6	3110B-662ON	3110N-662ON		
1-1/2	1-1/2	40	10	.7	150	10.5	100	6.9	150	65.5	5	6	3116B-692ON	3116N-692CN		
2	2	56	10	.7	150	10.5	100	6.9	150	65.5	5	6	3120B-712ON	3120N-712CN		
3	3	75	10	.7	150	10.5	100	6.9	150	65.5	5	6	3130B-762ON	-		

Wattage Rating / Power Consumption

DC	AC			
Wattage	Voltage (60 Hz)	Wattage	Inrush Current V ma	Holding Current V ma
6	24	5	385	200
	120	5	97	65
	240	5	58	37

Operational Sequence / Flow Patterns

2-Way Normally Closed

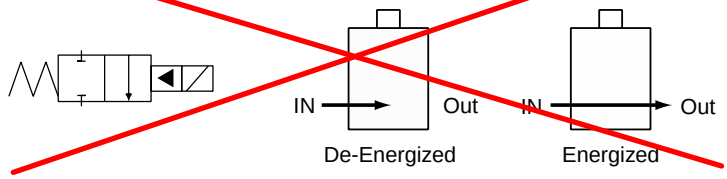

2-Way Normally Open

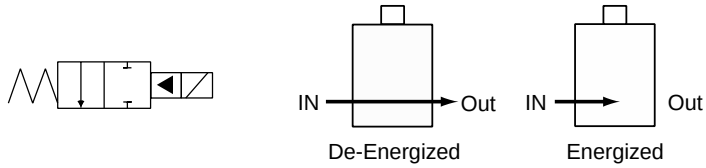

Dimensions (in inches)

Brass Valves

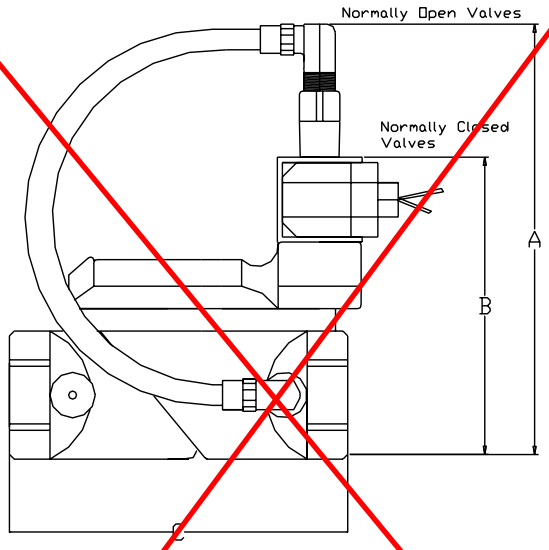

Pipe Size	A	B	C	Weight (lbs)
3/4”	4.6	3.8	4.2	1.8
1”	5.3	4.0	4.4	2.5
1-1/2”	7.3	5.1	6.1	6.8
2”	7.3	5.6	7.0	8.5
3”	11.7	10.0	11.7	38.0

GF Nylon Valves

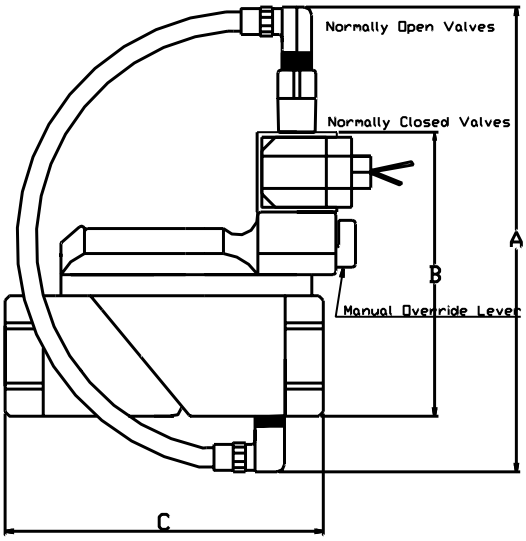

Pipe Size	A	B	C	Weight (lbs)
1”	5.98	4.1	4.35	.75
1-1/2”	7.2*	7.2*	6.3	2.2
2”	7.4*	7.4*	6.8	2.4

**Measured to top of flow control (not shown)*

For Further Information:

See the Engineering Reference Section for information on power usage, latching valve schematics and details on coil construction. Also, refer to the Chemical Resistance Chart section for information on material to media compatibility when choosing a valve material and seals.

PLAST-O-MATIC

PRODUCT DATA

CATALOG SWT

NEW!

Series SWT Pressure Switch

Corrosion-Resistant Design with No Wetted Metals or Elastomers

Features:

- PVC body, 1/2" NPT connection.
- Used to signal equipment when pressure in a piping system either rises or falls to a set pressure.
- Adjusts easily with adjusting screw.
- Maximum operating pressure of 150 PSI via three easy-to-change spring ranges.
- NEMA 4X design and patented Fail-Dry® enhance system safety.
- Electrical switch is UL recognized and CSA approved.
- Corrosion-resistant plastic cord grip and 18" cable simplify installation.
- Better piston design and piston guidance vs. competition enhances reliability and accuracy.
- Tested to 1,000,000 cycles in laboratory conditions.
- PTFE diaphragm with no wetted metals or elastomers is ideal for ultra-pure liquids.
- Versatile snap-action 16 Amp/3 terminal switch is standard; 25 Amp and low deadband 3 Amp switches optional.

How It Works:

The Plast-O-Matic Series SWT Pressure Switch can be used to activate or de-activate equipment when pressure in a piping system either rises or falls to a set pressure. Liquid in the piping system acts against a Viton®-backed PTFE diaphragm (the Viton® does not contact liquid). The diaphragm works against a piston and spring, which triggers an electrical switch within the upper chamber of the unit. Spring pressure is set by simply threading the adjusting screw in and out.

Series SWT contains a snap-action electric switch with three terminals. One is common, one is normally-open, and one is normally-closed. The normally-open switch will close upon reaching the set pressure, and the normally-closed switch will open when set pressure is reached. Set pressure can be reached by higher system pressure falling to the set value, or when lower system pressure rises to the set value.

As an example, the switch can be set to actuate at 50 PSI, rising pressure (switch actuates when pressure rises to 50 PSI). When the pressure rises to 50 PSI the normally-open contact will close, and the normally-closed contact will open. Therefore, depending on how the switch is wired, a light, or a pump, etc. can be energized or de-energized… or one item could be energized and another de-energized at the same moment. As the pressure continues to rise, no further changes occur.

PLAST-O-MATIC VALVES, INC.
1384 Pompton Avenue, Cedar Grove, New Jersey 07009
(973) 256-3000 • Fax (973) 256-4745 • www.plastomatic.com

SERIES SWT PRESSURE SWITCH

Hysteresis:

If and when the pressure decreases, the switch will reverse, but not at 50 PSI. Because of hysteresis (also know as "deadband"), the reversal will occur at approximately 40% lower pressure.

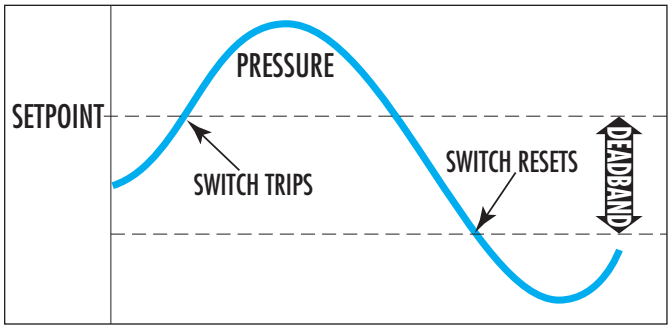

Deadband helps to prevent oscillation or "hunting". In other words, without sufficient deadband, the switch will be actuating and de-actuating too often. For applications where it is critical to de-actuate with less deadband, a 3 Amp switch is available. See specifications below.

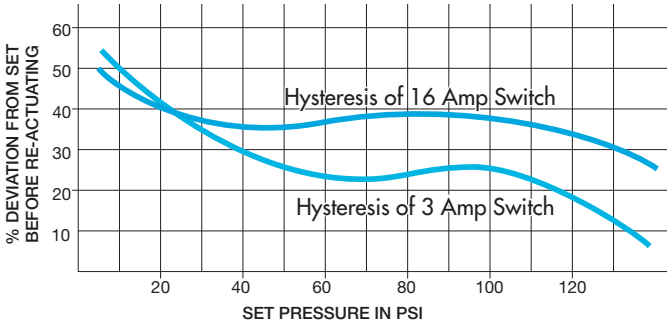

Chart shows hysteresis or "deadband" as a percentage of set pressure. Shows where electrical switch will de-actuate under failing pressure, after actuating at set pressure. (For 25 Amp switch, consult factory)

Installation:

The SWT can be mounted in any orientation. Performance may vary if the SWT is set in one orientation and changed to another; it should be set in the orientation in which it will be used (rising or falling pressure).

The SWT has been laboratory tested to 1,000,000 cycles. Cycle life in field use may vary due to amperage, chemical attack, temperature and pressure variations, or other environmental factors. For example, using the switch at its maximum amperage rating will dramatically reduce the life of the electrical switch. The electrical switch is readily replaceable.

Series SWT Dimensions

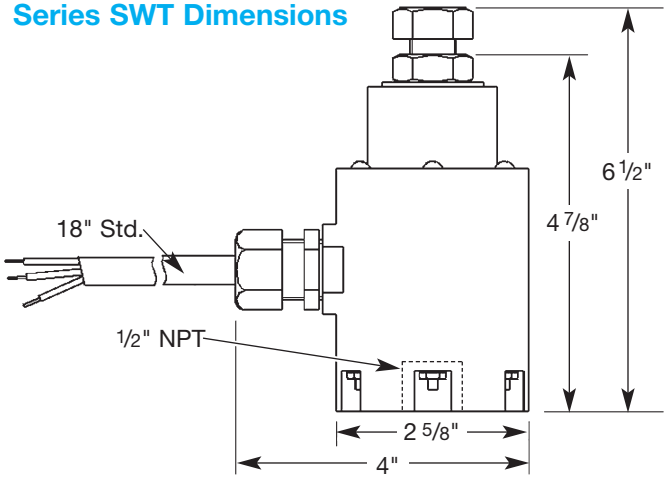

Series SWT Specifications

Part Number	Body Material	Pipe Size NPT	Seal Material	Amperage
SWT050T-16A-PV	PVC	1/2" NPT	PTFE	16
SWT050T-25A-PV	PVC	1/2" NPT	PTFE	25
SWT050T-3A-PV	PVC	1/2" NPT	PTFE	3

ADDITIONAL SPECIFICATIONS	
Wetted Parts	Geon® PVC, PTFE
Non-Wetted Parts	PVC, Viton, Stainless Steel, Ethylene Propylene Rubber, Nylon, Buna-Nitrile
Pressure Rating	Maximum 150 PSI @ 70°F
Operating Pressure	3 Ranges: 15-50 PSI, 50-100 PSI, 100-150 PSI according to the spring installed. All three springs are included, the middle range (50-100) is installed by the factory unless otherwise specified
Standard Switch Rating	16 Amps @ 125 VAC, 1/2 HP; 6 Amps @ 250 VAC, 1/2 HP. UL Recognized and CSA Approved
Electrical Cable	18" 3-wire stranded copper cable with .015 PVC jacket indoor/outdoor, unshielded, 90°C, 600 volts

PLAST-O-MATIC VALVES, INC.
1384 Pompton Avenue,Cedar Grove, NJ 07009
(973) 256-3000 • Fax (973) 256-4745
www.plastomatic.com • info@plastomatic.com

AUTHORIZED PLAST-O-MATIC DISTRIBUTOR

PLAST-O-MATIC PRODUCT DATA

CATALOG RVDT

New! Teflon® Diaphragm Relief, By-Pass, Back Pressure, Anti-Siphon Valves...

for Smooth, Sensitive Operation and the Ultimate in Corrosion Resistance... with No Wetted Elastomers!

Features:

- One valve design functions as a relief valve, by-pass valve, back-pressure valve and anti-siphon valve.
- *Relief:* protects systems and equipment from over-pressure/ pressure surges. *By-Pass:* prevents pumps from "dead heading". *Back-Pressure:* maintains necessary reverse pressure in closed loop systems. *Anti-Siphon:* prevents unwanted chemical siphoning, if city water pressure drops to zero, and changes in elevation create negative pressure.
- Unique Teflon Diaphragm is excellent for use with highly aggressive liquids... and also provides the ultimate in contamination-free sealing.
- Rugged thermoplastic construction is ideal for a broad range of industrial applications.
- Large diaphragm area delivers more sensitivity and less pressure drop under flow conditions.
- Patented Fail-Dry® safety feature provides visual warning of seal malfunction and permits the valve to continue operation until a scheduled maintenance can be planned thereby avoiding a costly shutdown.
- Non-leaching feature of Teflon makes it also ideal for use with ultra-pure water and concentrated etchants, as in the semiconductor industry.
- Available in 1/4", 1/2", 3/4", 1", 1 1/2" & 2" sizes. Others on request.

MATERIALS OF CONSTRUCTION:

Series RVDT relief valves are available in PVC, Polypropylene, PVDF (Kynar®) and Teflon® body materials. The wetted diaphragm is Teflon energized by a non-wetted Viton® diaphragm. Springs (not in wetted area) are zinc-plated steel, fasteners are stainless steel and adjusting screw is high-density polyethylene.

PLAST-O-MATIC VALVES, INC.
1384 Pompton Avenue, Cedar Grove, New Jersey 07009-1095
(973) 256-3000 • Fax (973) 256-4745 • www.plastomatic.com

DESIGN:

Series RVDT in-line pressure relief valves feature a wetted flat Teflon diaphragm to resist both chemical attack and salt crystallization problems. A large active diaphragm area provides for smooth, chatter-free operation. Relief setting is infinitely adjustable from 5 PSI to 100 PSI. Series RVDT is available in 1/4", 1/2", 3/4", 1", 1 1/2" and 2" pipe sizes.

SIZING:

To determine the proper size relief valve required, it is necessary to know how many gallons per minute of liquid must pass through the valve and the allowable pressures to achieve that flow. Keep in mind that the relief valves open gradually as they build up to the maximum flow rates depending on the amount of overpressure present.

The next step is to consult the flow reference chart. The chart recommends the maximum flow to be used with each valve size and the overpressure required to reach that flow. Overpressure is the amount of pressure needed beyond the set pressure.

SERIES RVDT FLOW REFERENCE CHART:

PIPE SIZE	OVERPRESSURE TO REACH INDICATED MAXIMUM FLOW RATE	
1/4	**.5 GPM** – 5 PSI	**1 GPM** – 8 PSI
1/2	**2 GPM** – 8 PSI	**4 GPM** – 12PSI
3/4	**5 GPM** – 9 PSI	**8 GPM** – 12 PSI
1	**9 GPM** – 9 PSI	**15 GPM** – 12 PSI
1 1/2	**25 GPM** – 9 PSI	**50 GPM** – 16 PSI
2	**40 GPM** – 10 PSI	**75 GPM** – 20 PSI

INSTALLATION:

Several control springs are supplied so that the user can select the spring having the proper pressure range in order to set the valve at the desired relief setting.

Before installing the valve in the line, follow the procedure for setting the relief pressure as recommended in the instruction sheet supplied with the valve.

The relief valve can be mounted in any position but should be installed as near as possible to the line or equipment being protected.

All threaded connections should have an acceptable pipe sealant to effect a good seal. Use care with Teflon tape so that it does not hang off in the valve seat area and cause a leak. The assembly need only be made hand tight followed by a one-quarter turn with a strap wrench. Do not over-tighten or breakage will result. Never use pipe wrenches or metal pipe nipples which could cut into the plastic and cause a fracture.

DIMENSIONS:

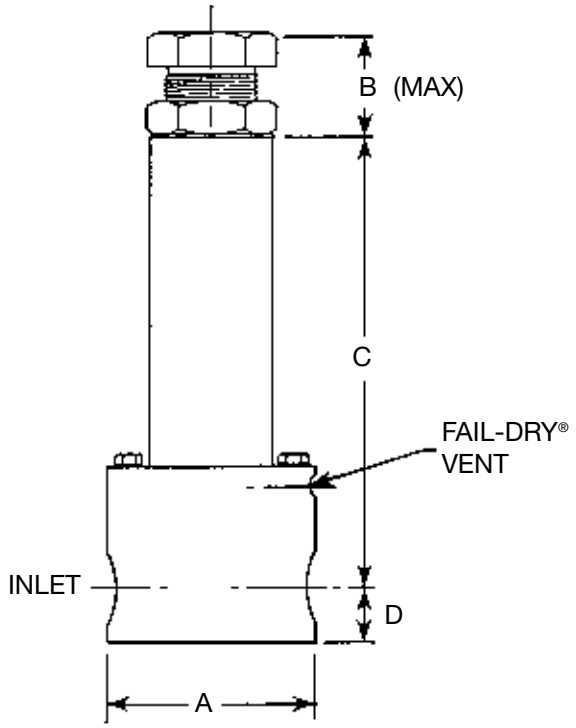

PIPE SIZE NPT	SERIES RVDT DIMENSIONS							
	A		B		C		D	
	in.	mm.	in.	mm.	in.	mm.	in.	mm.
1/4	2.0	50	1.38	35	4.30	109	.470	11
1/2	2.5	63	1.48	37	4.41	112	.687	17
3/4	3.0	76	2.81	71	5.39	137	.780	19
1	3.5	83	3.00	76	7.65	194	1.187	30
1 1/2	5.0	127	3.50	89	7.00	178	1.500	38
2	6.0	153	2.80	71	8.13	207	1.750	45

SERIES RVDT MODEL NUMBERS:

PIPE SIZE	PVC Model No.	POLYPRO* Model No.	PVDF Model No.	TEFLON Model No.
1/4	RVDT025V-PV	RVDT025V-PP	RVDT025V-PF	RVDT025V-TF
1/2	RVDT050V-PV	RVDT050V-PP	RVDT050V-PF	RVDT050V-TF
3/4	RVDT075V-PV	RVDT075V-PP	RVDT075V-PF	RVDT075V-TF
1	RVDT100V-PV	RVDT100V-PP	RVDT100V-PF	RVDT100V-TF
1 1/2	RVDT150V-PV	RVDT150V-PP	RVDT150V-PF	Consult Factory
2	RVDT200V-PV	RVDT200V-PP	RVDT200V-PF	

*Natural Polypropylene

For more information on other Plast-O-Matic in-line and angle pattern pressure relief valves, refer to Catalog RV.

AUTHORIZED PLAST-O-MATIC DISTRIBUTOR

PLAST-O-MATIC VALVES, INC.
1384 Pompton Avenue,Cedar Grove, NJ 07009-1095
(973) 256-3000 • Fax (973) 256-4745
www.plastomatic.com

Series V8

FLOTECT® Vane Operated Flow Switch

Field adjustable — 1 to 6 inch pipe. Leak proof body.

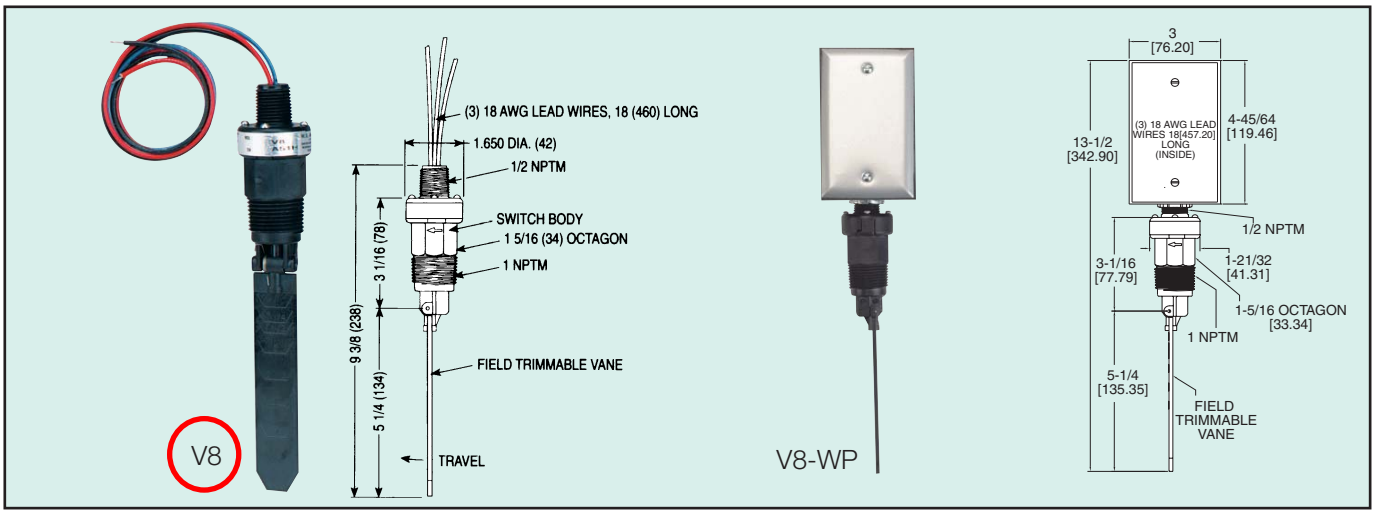

V8 Flotect Protects Equipment: Operation is simple and dependable. In most applications, the switch is normally off while there is sufficient flow of liquid or air. When flow stops, the vane spring moves the vane, actuating a single pole double throw switch rated at 5A 120/250 VAC to start or stop motor, pump, engine, etc. Operate a damper or valve; shut down a burner or actuate an alarm or signal, protecting unattended equipment from damage or loss of production.

The V8 Flotect® Flow Switch has a leak proof body and vane constructed of tough durable polyphenylene sulfide (equivalent to RYTON®) which has excellent chemical resistance. The full size trimmable vane is provided with molded-in graduations allowing for installation in a 1 inch through 6 inch pipe. Operating pressures are up to 150 PSIG (10 Bar) and temperatures to 212°F (100°C). The V8 flow switch can be used in various chemical processes, industrial systems and similar applications where process conditions are compatible with polyphenylene sulfide, ceramic 8 and 316SS. The V8 Flotect control is UL recognized as an industrial motor controller per UL standard 508, suitable for mounting in a protected environment.

Cold Water Flow Rates Approximate actuation/deactuation **GPM** upper, **LPM** lower		**Air Flow Rates** Approximate actuation/deactuation **SCFM** upper, **NM³/H** lower	
Pipe Size		**Pipe Size**	
1"	10.8/9.1 40.9/34.6	1"	39/32.6 66.3/55.4
1¼"	9.8/8.3 37.2/31.4	1¼"	37.5/32.2 63.7/54.7
1½"	8.6/6.8 32.4/25.7	1½"	33.4/26.7 56.7/45.4
2"	10.9/8.8 41.2/33.4	2"	43/36.8 73.1/62.5
3"	12.9/8.9 48.8/33.5	3"	52.7/38.9 89.6/66
4"	21.1/13.8 79.7/52.2	4"	87.6/63.6 148.9/108.1
6"	45/33 170.2/124.7	6"	168.6/137.4 286.5/233.4

APPLICATIONS

Applications are chemical processing, air conditioning, refrigeration, heating systems, cooling lines, machinery, liquid transfer systems, water treatment, food processing, and machine tools. Also, other applications compatible with the materials of construction.

PHYSICAL DATA

Temperature Limit: 212°F (100°C) maximum.
Operating Pressure: 150 psig (10 Bar)
Piping Connection: 1" NPT installed in tee or bushing (not supplied).
Electrical Rating: One SPDT snap action switch 5 A, 125/250 VAC.
Wire: 18 AWG 18" long (460mm).
Overall Length: 9.375 inches (238mm).
Switch Body: Molded Polyphenylene Sulfide (PPS)
Wetted Materials of Construction: Polyphenylene Sulfide, Ceramic 8 magnet, 316SS pin and spring.
Vane: Field trimmable to fit most applications.
Installation: Install with index arrow in direction of flow.
Weight: 4.5 oz.(0.13 kg)

STOCKED MODEL

V8 Flow Switch .....

OPTIONS:

Gold Plated Contacts, for dry circuits. Rated 1A @ 125 VAC; 1A resistive, 0.5A inductive @ 30 VDC. To order add suffix -MV. Example: **V8-MV** . . . . . .

Inconel® Option. Inconel® replaces standard 316 SS wetted parts. Wetted parts are Inconel®, ceramic 8, and Polyphenylene Sulfide. To order add suffix -INC.
Example: **V8-INC** . . . . . .

Weatherproof Enclosure. Optional housing is aluminum and provides weatherproof protection for electrical wiring. To order add suffix -WP.
Example: **V8-WP** . . . . . .

Suggested Specifications:

Automatic Polyphenylene Sulfide plastic flow switch shall be vane operated to actuate a single pole, double throw snap switch. Motion of the vane shall actuate switch by action of a magnet which controls the switch inside the one piece leak proof switch body. Control shall be suitable for pressure up to 150 psig (10 Bar) and temperature to 212°F (100°C). Switch shall be W.E. Anderson Model No. V8.

Dwyer Instruments, Inc. P.O. Box 373/Michigan City, Indiana 46361/Phone 219 879-8000/Fax 219 872-9057 • U.K. Phone (01494)-461707 • Australia Phone (02) 9756-5355

The GR series is Oseco's high-tech answer to the disadvantages of graphite disks.

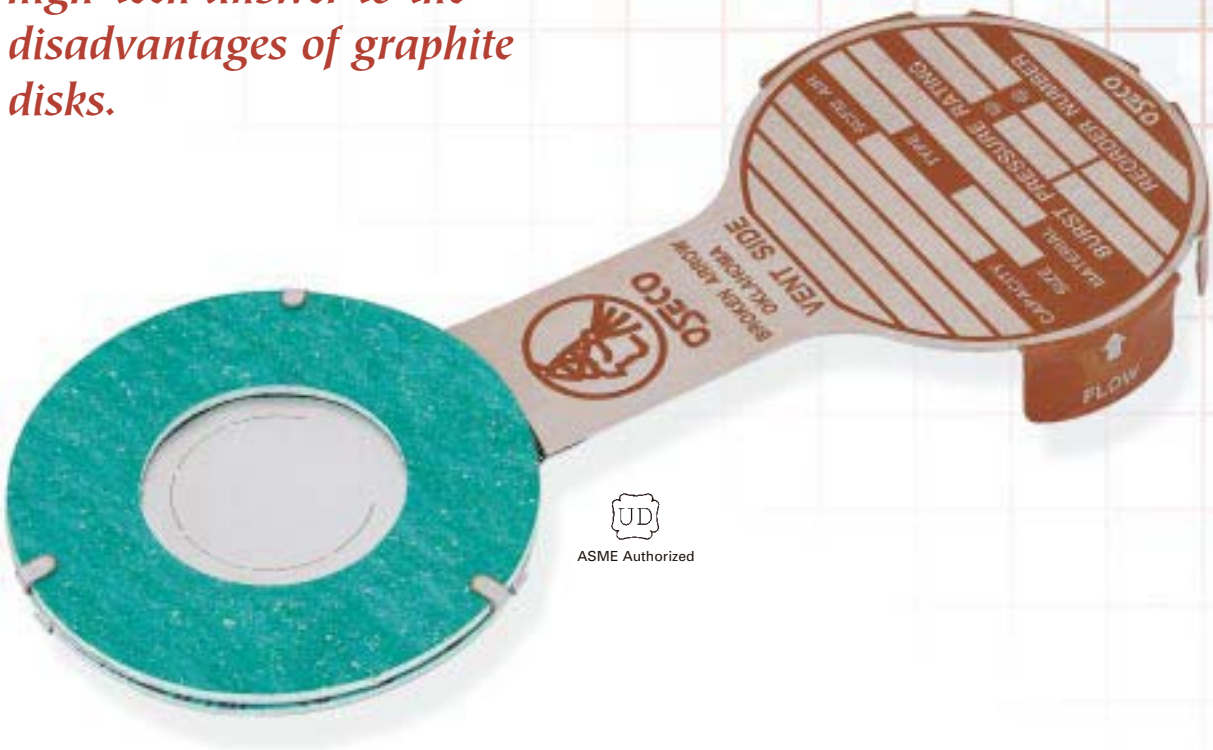

UD
ASME Authorized

GR™

OSECO GRAPHITE REPLACEMENT

P T U R E • D I S K

A HALMA GROUP COMPANY

GR GRAPHITE REPLACEMENT RUPTURE DISK

Oseco's GR pressure relief devices provide an economical, high-performance solution to the disadvantages of fragile graphite disks. The fluoropolymer-encapsulated stainless steel GR series gives you superior pressure relief protection for the pharmaceutical and chemical process industries.

The GR is precision-cut by Oseco's unparalleled in-house, five-axis laser to exacting standards, resulting in a precision disk with burst pressures as low as 2.5 psig! The Oseco advantage is the GR's particular suitability for corrosive applications, since it is nonfragmenting, non-torque-sensitive, and highly resistant to corrosion and breakage.

The GR is easy to install on its own, designed to bolt between standard 150# ANSI pipe flanges and to fit within the bolt circle. The GR can also be supplied with a spacer on its vent side to provide interchangeability with existing monoblock graphite disk installations. The spacer may be constructed either of permanently attached Valox® 420, for one-time use (GRO™), or of stainless steel or carbon steel for reusability and easy attachment (GRR™).

The GR is excellent for applications where fragmentation is a problem, due to its nonfragmenting design. It is an ideal, economical solution for low-pressure explosion prevention.

UD
ASME Authorized

Patent Pending

OSECO GR Graphite Replacement Disks

Please consult the Oseco factory for sizes, pressures, materials, or other options not listed.

- Standard Sizes: 1" to 8" diameter.
- Standard Burst Pressures: 2.5 psig to 150 psig. Stocked burst pressures are listed for all standard sizes. **See Table 2.**
- Manufacturing Range: All Oseco GR disks meet a standard zero manufacturing range.
- Tolerance: 5% tolerance for requested burst pressures at or above 40 psig (2 psig tolerance for requested burst pressures below 40 psig).
- UD Stamping Available
- Temperature Range: Maximum 500° F for GR and GRR (maximum 420° F for GRO).
- Applications: Excellent for either gas or liquid service.
- Operating Ratio: In cycling applications, the GR can face operating pressures up to 60% of the stamped burst pressure.
- Vacuum Supports: Fully opening vacuum supports are available and recommended for all disks rated 30 psig and below that are required to withstand vacuum. The vacuum support must be ordered at the same time as the disk.

Valox® is a registered trademark of General Electric Company.
GR, GRO, GRR, and GS are trademarks, and OSECO is a registered trademark, of Oseco, Inc.

The heart of the GR series of rupture disks is a laser-cut stainless steel controlling membrane, encapsulated with PFA fluoropolymer seal in contact with the process. A stainless steel support ring ensures durability and anchors the stainless steel specification tag. Standard gaskets are nonasbestos material, with gaskets of PFA fluoropolymer and other materials available as an option.

GRO

The GRO consists of the GR permanently attached to a one-time-use Valox® 420 spacer, which matches the overall height of standard monoblock graphite disks. Once overpressurization occurs, the entire assembly is replaced.

GR

The GR disk is designed to fit between standard ANSI 150# flanges.

GRR

The GRR, designed for easy installation, consists of the GR with an attached carbon-steel reusable GS™ spacer. (Stainless steel GS spacers are also available.)

UD
ASME Authorized

TABLE 1
Graphite vs. Stainless Steel Comparison

	Oseco Stainless Steel GR Series Disks	Competitor Graphite Disk
No holder required	Yes	Yes
Fully opening vacuum supports	Yes	No
Operation to 60% set pressure (high-cycling)	Yes	Yes
Corrosion-resistant material in contact with process	Yes	Sometimes*
Burst pressure not subject to change over time	Yes	Sometimes*
Nonfragmenting design	Yes	No
Non-torque-sensitive	Yes	No
Dust-free service	Yes	No
Damage resistance	High	Low
Maximum temperature (° F)	500	338

*Graphite is sensitive to wet oxidizing conditions. Incomplete resin treatment of graphite can also cause gradual changes in its burst pressure.

TABLE 2
Stock Burst Pressures for GR Rupture Disks at 72° F*

Pipe Size in	Stocked Burst Pressures 2.5	5	10	15	20	25	30	40	50	75	100	125	150	Overall GR Height in	Overall GRO, GRR Height in
1.0					X	X	X	X	X	X	X	X	X	0.125	0.875
1.5				X	X	X	X	X	X	X	X	X	X	0.125	0.875
2.0			X	X	X	X	X	X	X	X	X	X	X	0.125	0.875
3.0			X	X	X	X	X	X	X	X	X	X	X	0.125	0.875
4.0		X	X	X	X	X	X	X	X	X	X	X	X	0.125	0.875
6.0		X	X	X	X	X	X	X	X	X	X			0.125	0.875
8.0	X	X	X	X	X	X	X	X	X	X	X			0.125	1.125

The lowest stocked burst pressure shown above is the minimum pressure available.
*Please consult the Oseco factory for other burst pressures.

CHART 1
GR Disk Temperature Correction Curve

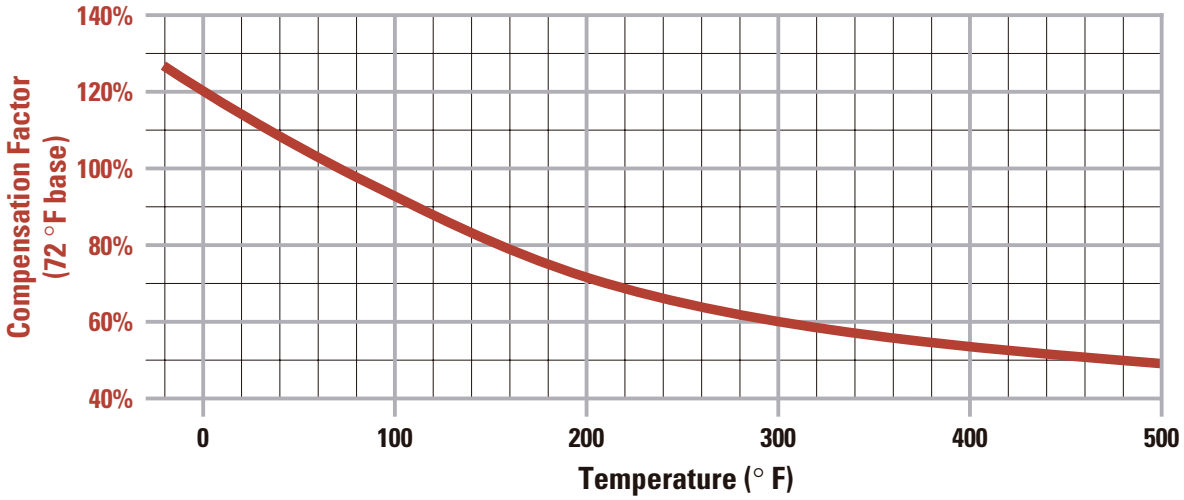

The above chart can be used to estimate the burst pressure of the GR disk at temperatures other than 72° F.
Please consult with the factory to confirm the estimation.

Made in the USA Since 1981

Oseco, Inc.

OSECO
1701 West Tacoma, **Broken Arrow, OK** 74012, U.S.A.
voice 1.918.258.5626 • fax 1.918.251.7662

EUROPE: OSECO EUROPE BV
Box 23, 8330AA **Steenwÿk, the Netherlands**
voice 31.521.522.578 • fax 31.521.510.405

A HALMA GROUP COMPANY

www.oseco.com • 1.800.395.disk • info@oseco.com

SVT *Burst Disk Sensor*

The Oseco type SVT Burst Disk has been designed to meet multiple industry needs. The 3/16" sensor thickness allows for installation with existing bursting disk assemblies.

Installation and Function

The Oseco type SVT Burst Disk Sensor represents a simple and effective means of indicating the rupture of a bursting disk. The SVT Burst Disk Sensor is installed on the vent side of the bursting disk assembly, and is the preferred sensor model for use upstream of safety relief valves. Upon rupture of the bursting disk, the disk alarm circuit is opened by the flowing media. The open circuit may be used to activate a variety of alarms, including computer-controlled systems.

Features

- Supplied ready for installation
- Excellent chemical resistance
- All materials are asbestos-free
- Minimum downtime due to immediate burst disk indication
- Suitable for use with most bursting disks
- Fast recognition of failures, which is critical for hazardous and environmentally sensitive processes

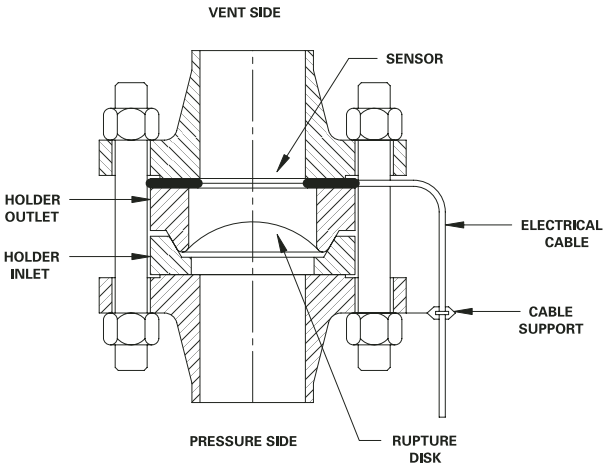

SVT Burst Disk Sensor Specifications

Electrical Data

Max Preburst Resistance – 20 OHMS
Max Current – 150 mA
Temperature Range – -40° to +392° F

Materials

Gasket – Asbestos-Free Synthetic
Membrane – PEEK
Circuit Track – Silver
Cable – 6 ft., 24 AWG, 2 Conductor, Fluoropolymer Insulated, Shielded

Note: The Oseco SVT Burst Disk Sensor can be used with most metal or graphite disks.

Normal Size	1	1.5	2	3	4	6	8	10	12	14	16	18	20	24
Sensor Tk. (in.)	3/16	3/16	3/16	3/16	3/16	3/16	3/16	3/16	3/16	3/16	3/16	3/16	3/16	3/16
Min. Psig.	5	5	5	3	2	1	1	1	1	1	1	1	1	1

Ball Valve Type 546, PVC with lockable handle, solvent cement socket, Inch ASTM and threaded valve ends, NPT

Assembly 800-016-011 & 800-016-012 includes Type 546 Ball Valve and Multifunctional Module

Features:

- True union ball valve for easy installation and removal (z-dimension, valve end and valve nut **are not compatible** with Type 346)
- Ball seals in PTFE
- Integrated stainless steel mounting inserts
- Lockable hand lever with ratchet settings

Options:

- Individual configuration of the valve (see price sheets)
- Multifunction module with integrated limit switches
- Pneumatic or electric actuators from **+GF+**

All data are valid for models with solvent cement sockets

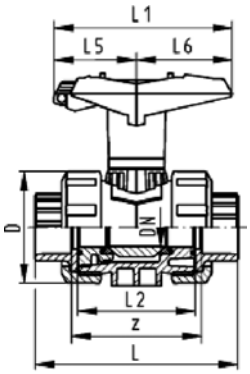

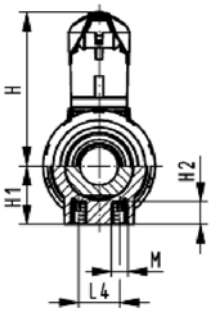

inch	DN	psi	Cv value (Δp = 1 psi)	EPDM Seals	FPM Seals
3/8	10	232	4.97	161 546 361	161 546 371
1/2	15	232	12.95	161 546 362	161 546 372
3/4	20	232	24.50	161 546 363	161 546 373
1	25	232	49.01	161 546 364	161 546 374
1 1/4	32	232	70.02	161 546 365	161 546 375
1 1/2	40	232	112.04	161 546 366	161 546 376
2	50	232	217.08	161 546 367	161 546 377

inch	DN	D	H	H1	H2	L	L1	L2	L4	L5	L6	z	M	lbs
3/8	10	1.97	3.11	1.04	0.47	4.13	3.43	2.20	0.98	1.65	1.77	2.64	M6	0.43
1/2	15	1.97	3.11	1.04	0.47	4.13	3.43	2.20	0.98	1.65	1.77	2.40	M6	0.45
3/4	20	2.28	3.46	1.18	0.47	4.76	4.25	2.56	0.98	1.97	2.28	2.76	M6	0.69
1	25	2.68	3.70	1.40	0.47	5.24	4.25	2.80	0.98	1.97	2.28	2.99	M6	0.99
1 1/4	32	3.31	4.45	1.73	0.59	6.06	5.51	3.35	1.77	2.58	2.91	3.54	M8	1.69
1 1/2	40	3.82	4.69	1.99	0.59	6.46	5.51	3.50	1.77	2.58	2.91	3.70	M8	2.27
2	50	4.88	5.55	2.52	0.59	7.20	6.50	3.98	1.77	3.07	3.41	4.21	M8	4.00

Multifunction module (I04) PP-GF with mechanical limit switches, Au

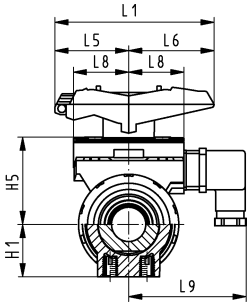

- Accessory to Type 546 Ball Valve
- Multifunction module acts as an intermediate element for actuators
- Includes Plug 3P+E / Protection: IP65

inch	d	DN	Code	H1	H5	L1	L5	L6	L8	L9	lbs	
3/8	16	10	**167 482 635**	1.04	1.97	3.43	1.65	1.77	1.34	2.87	0.24	
1/2	20	15	**167 482 635**	1.04	1.97	3.43	1.65	1.77	1.34	2.87	0.24	
3/4	25	20	**167 482 636**	1.18	2.09	4.25	1.97	2.28	1.50	3.03	0.26	
1	32	25	**167 482 636**	1.40	2.32	4.25	1.97	2.28	1.50	3.03	0.26	
1 1/4	40	32	**167 482 637**	1.73	2.83	5.51	2.60	2.95	1.61	3.15	0.30	
1 1/2	50	40	**167 482 637**	1.99	3.07	5.51	2.60	2.95	1.61	3.15	0.30	
2	63	50	**167 482 638**	2.52	3.70	6.50	3.07	3.43	1.81	3.35	0.39	

Multifunction module (I06) PP-GF with inductive limit switches, PNP

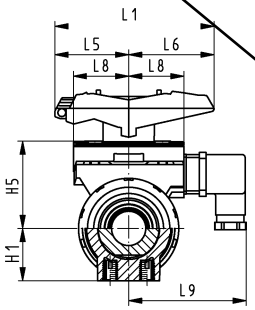

- Accessory to Type 546 Ball Valve
- Multifunction module acts as an intermediate element for actuators
- Includes Plug 3P+E / Protection: IP65

inch	d	DN	Code	H1	H5	L1	L5	L6	L8	L9	lbs	
3/8	16	10	**167 482 662**	1.04	1.97	3.43	1.65	1.77	1.34	2.87	0.24	
1/2	20	15	**167 482 662**	1.04	1.97	3.43	1.65	1.77	1.34	2.87	0.24	
3/4	25	20	**167 482 663**	1.18	2.09	4.25	1.97	2.28	1.50	3.03	0.26	
1	32	25	**167 482 663**	1.40	2.32	4.25	1.97	2.28	1.50	3.03	0.26	
1 1/4	40	32	**167 482 664**	1.73	2.83	5.51	2.60	2.95	1.61	3.15	0.30	
1 1/2	50	40	**167 482 664**	1.99	3.07	5.51	2.60	2.95	1.61	3.15	0.30	
2	63	50	**167 482 665**	2.52	3.70	6.50	3.07	3.43	1.81	3.35	0.39	

Multifunction module (I07) PP-GF with inductive limit switches, NPN

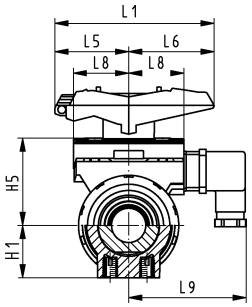

- Accessory to Type 546 Ball Valve
- Multifunction module acts as an intermediate element for actuators
- Includes Plug 3P+E / Protection: IP65

inch	d	DN	Code	H1	H5	L1	L5	L6	L8	L9	lbs	
3/8	16	10	**167 482 653**	1.04	1.97	3.43	1.65	1.77	1.34	2.87	0.24	
1/2	20	15	**167 482 653**	1.04	1.97	3.43	1.65	1.77	1.34	2.87	0.24	
3/4	25	20	**167 482 654**	1.18	2.09	4.25	1.97	2.28	1.50	3.03	0.26	
1	32	25	**167 482 654**	1.40	2.32	4.25	1.97	2.28	1.50	3.03	0.26	
1 1/4	40	32	**167 482 655**	1.73	2.83	5.51	2.60	2.95	1.61	3.15	0.30	
1 1/2	50	40	**167 482 655**	1.99	3.07	5.51	2.60	2.95	1.61	3.15	0.30	
2	63	50	**167 482 656**	2.52	3.70	6.50	3.07	3.43	1.81	3.35	0.39	

Cell Temperature Switch
CT3-0138

Part Number	Description
(79137)-10-800-KR-D	Temperature Switch @ 60°c (Erector Switch)
(80097-1)-10-703-BH-KR	Kynar Bulkhead (Erector Switch)
(79119-26)-10-700-SP-PP	PolyPro Spacer Conduit Housing
(79119-25)-10-701-RT-PP	Conduit Housing (Erector Switch)
(62012)	Thomas & Betts 12 point Terminal Strip
(55220)-10-700-WC	Bushing Card Grip

REV	DATE	DESCRIPTION	DRAWN BY	CHECKED BY	APPROVED BY
3	08/13/01	ADDED 62012 TO DRAWING AND CORRECTED 79119-25	CBM	TMA	DPW
2	08/13/00	REVISED LOCATION OF A9023-11	CCB	TMA	DW
1	06/27/00	ISSUED FOR CONSTRUCTION	JHW	DW	DW

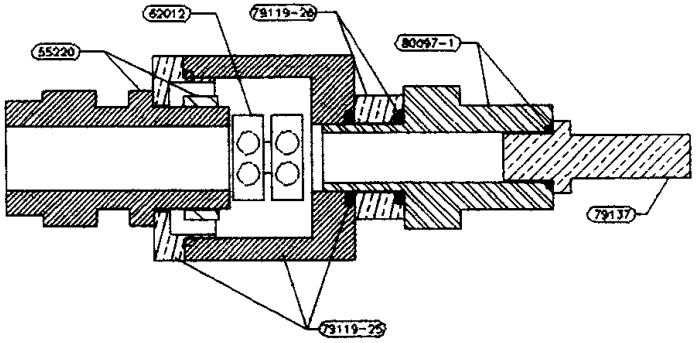

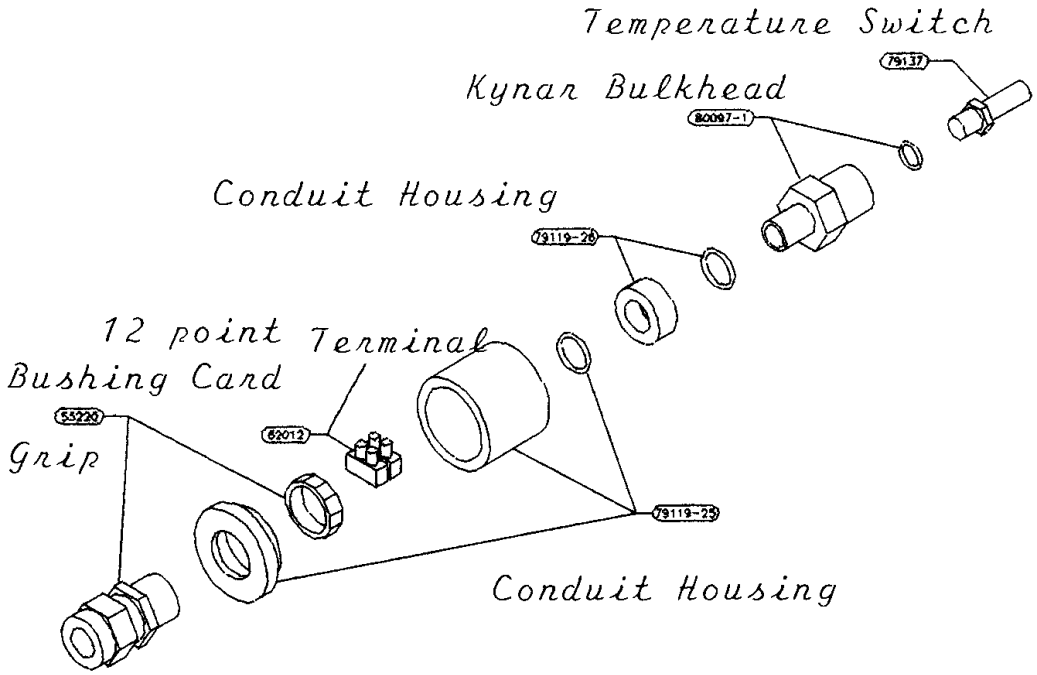

Cell Temperature Sensor (CT-0138)

NOTES (UNLESS OTHERWISE SPECIFIED)

SEVERN TRENT

EXCELTEC

1110 INDUSTRIAL BOULEVARD SUGAR LAND, TEXAS 77478

TELEPHONE No (281) 240-6778
FAX No (281) 240-6780

E-MAIL: exceltec@earthlink.net
WEB SITE: www.excelteccorp.com

UNLESS OTHERWISE NOTED
TOLERANCES
TYPE: INCHES (mm)
FRACTIONS ± 1/16" ±
.X ± .1" ± 2.5
.XX ± .02" ± .51
.XXX ± .005" ± .127
ANGLES ± 1°

NOTICE OF CONFIDENTIALITY

THIS DRAWING CONTAINS PROPRIETARY INFORMATION THAT IS NOT TO BE DISCLOSED TO OTHERS WITHOUT WRITTEN PERMISSION OF EXCELTEC CORPORATION. EXCELTEC CORPORATION HAS NO OBLIGATION TO DISCLOSE THIS INFORMATION, OR TO USE IT, IF DISCLOSED TO OTHERS, UNLESS WRITTEN PERMISSION IS GIVEN. THIS DRAWING MAY NOT BE USED FOR ANY PURPOSE, EXCEPT THAT FOR WHICH IT WAS SUPPLIED, WITHOUT PRIOR WRITTEN PERMISSION OF EXCELTEC CORPORATION.

CLORTEC
SWITCH
TEMPERATURE
CT50-500
SUB-ASSEMBLY

SCALE: 2:1
EXC JOB No:
SIZE: D
REV: 3
DWG No: CT3-0138
SHEET: 1 of 1

CT3-0138 PYELLINE ITEM NUMBERING

Severn Trent DeNora
Cell Level Sensor
CT3-0110

Part Number	Description
(14020)-10-782-KR	Kynar Level Float (Erector Switch)
(80097)-10-700-CS-KR	Kynar Tube Connector (Erector Switch)
(11646)	Kynar Nipple (Erector Switch)
(11231)-839-130	1” x ½” Eslon PVC Reduce Bushing
(80097-2)-10-703-BH-PP	¼” x ½” MPT (Erector Switch)
(79119-26)-10-700-SP-PP	PolyPro Spacer Conduit Housing
(79119-25)-10-701-RT-PP	Conduit Housing (Erector Switch)
(62012)	Thomas & Betts 12 point Terminal Strip
(55220)-10-700-WC	Bushing Card Grip (Erector Switch)

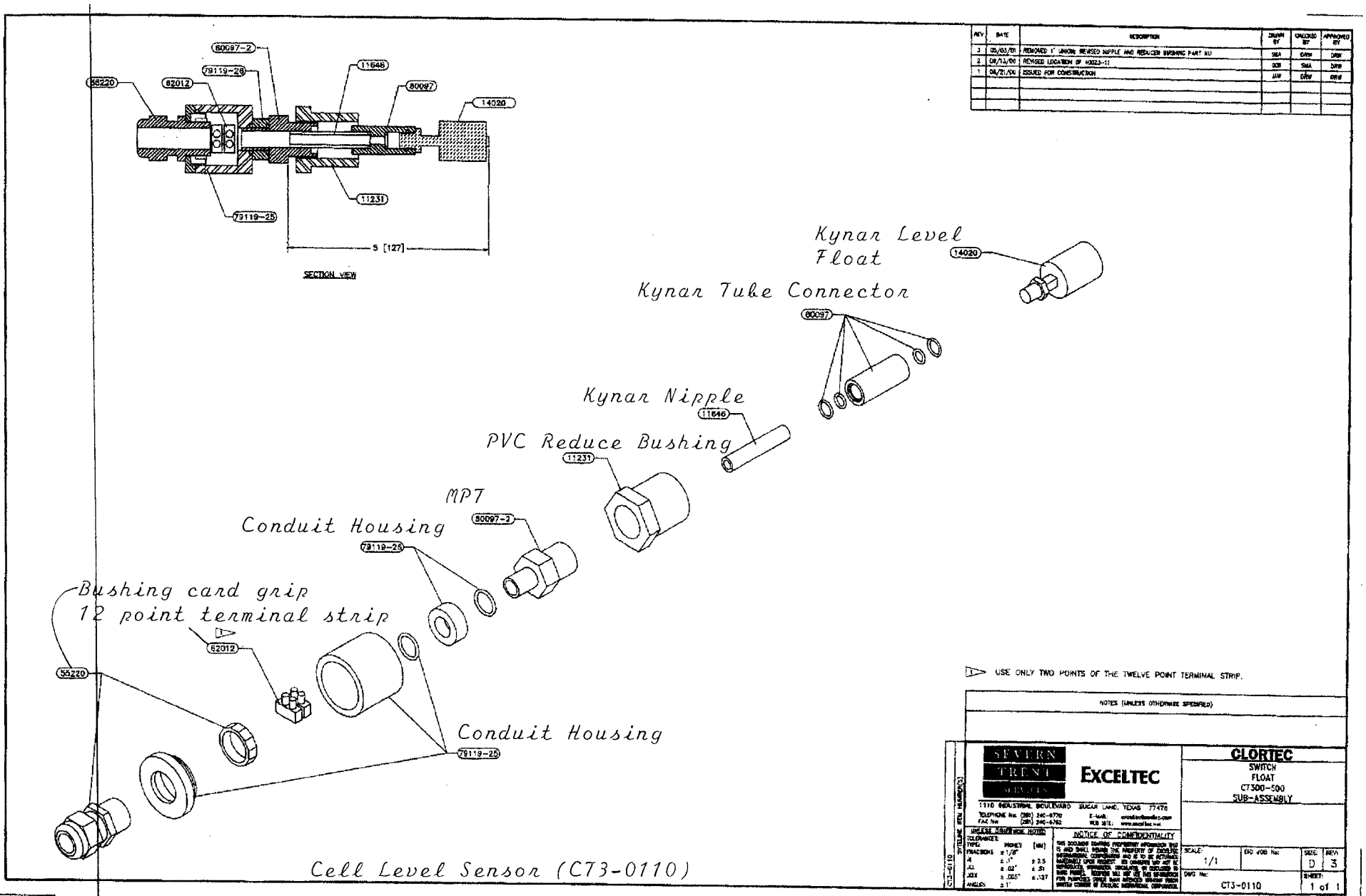

80097-2
79119-28
11646
55220
62012
80097
14020
11231
79119-25
5 [127]
SECTION VIEW
Kynar Level Float
14020
Kynar Tube Connector
80097
Kynar Nipple
11646
PVC Reduce Bushing
11231
MPT
80097-2
Conduit Housing
79119-25
Bushing card grip
12 point terminal strip
62012
55220
Conduit Housing
79119-25
Cell Level Sensor (CT3-0110)
USE ONLY TWO POINTS OF THE TWELVE POINT TERMINAL STRIP.
NOTES (UNLESS OTHERWISE SPECIFIED)
SEVERN TRENT SERVICES
EXCELTEC
1110 INDUSTRIAL BOULEVARD SUGAR LAND, TEXAS 77478
CLORTEC
SWITCH
FLOAT
CT300-500
SUB-ASSEMBLY
NOTICE OF CONFIDENTIALITY
SCALE: 1/1
SIZE: D
REV: 3
DWG No: CT3-0110
SHEET: 1 of 1

Section
3

ISR & J-BOXES

JB-400B, JB-420B, JB-440B

JB-400A, JB-420A, JB-440A

JB-450A, JB-500A, JB-520A, JB-540A, JB-560A

REV	DATE	DESCRIPTION	DRAWN BY	CHECKED BY	APPROVED BY
1	10/10/05	ISSUED FOR APPROVAL	JC		

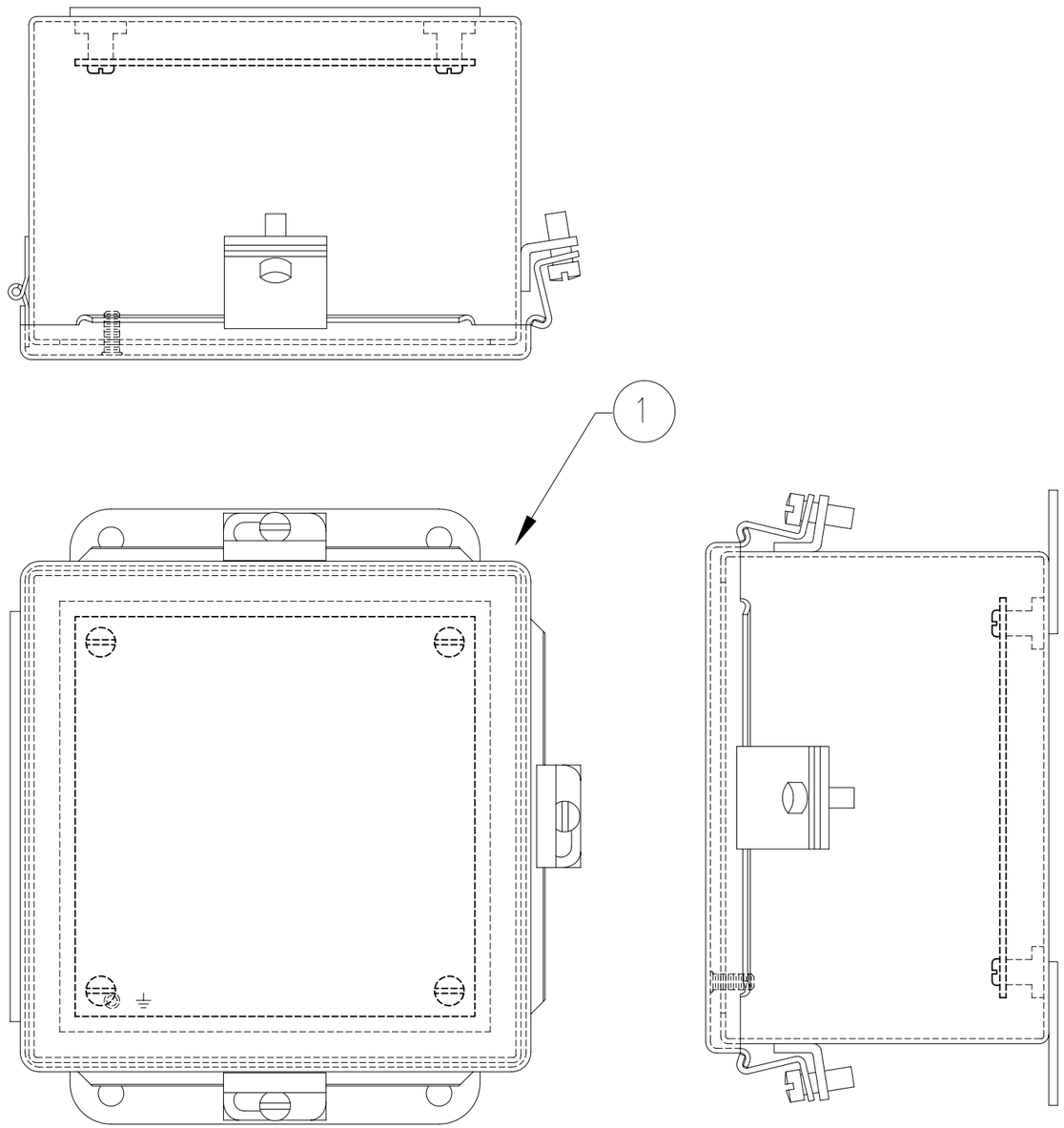

A-606CHNF

SEVERN TRENT SERVICES
CLORTEC
2660 COLUMBIA STREET, CALIFORNIA 90503
TELEPHONE No: (310) 618-9700
FAX No: (310) 618-9339
E-MAIL:
WEB SITE: www.severntrentservices.com

UNLESS OTHERWISE NOTED

NOTICE OF CONFIDENTIALITY
THIS DOCUMENT CONTAINS PROPRIETARY INFORMATION THAT IS AND SHALL REMAIN THE PROPERTY OF CLORTEC AND IS TO BE RETURNED IMMEDIATELY UPON REQUEST. ITS CONTENTS MAY NOT BE REPRODUCED, DISTRIBUTED, CIRCULATED, OR DISCLOSED TO THIRD PARTIES. RECIPIENT WILL NOT USE THIS INFORMATION FOR PURPOSES OTHER THAN INTENDED WITHOUT PRIOR WRITTEN CONSENT OF CLORTEC.

ENCLOSURE LAYOUT
NON-INTRINSIC
CELL RACK DEVICE BOX
P/N: 5000STD

SCALE:	CLORTEC JOB No:	SIZE:	REV:
NTS	STANDARD	B	1
DWG No: 5000STD-100-J400B.DWG		SHEET: 1 OF 1	

REV	DATE	DESCRIPTION	DRAWN BY	CHECKED BY	APPROVED BY
1	10/10/05	ISSUED FOR APPROVAL	JC		

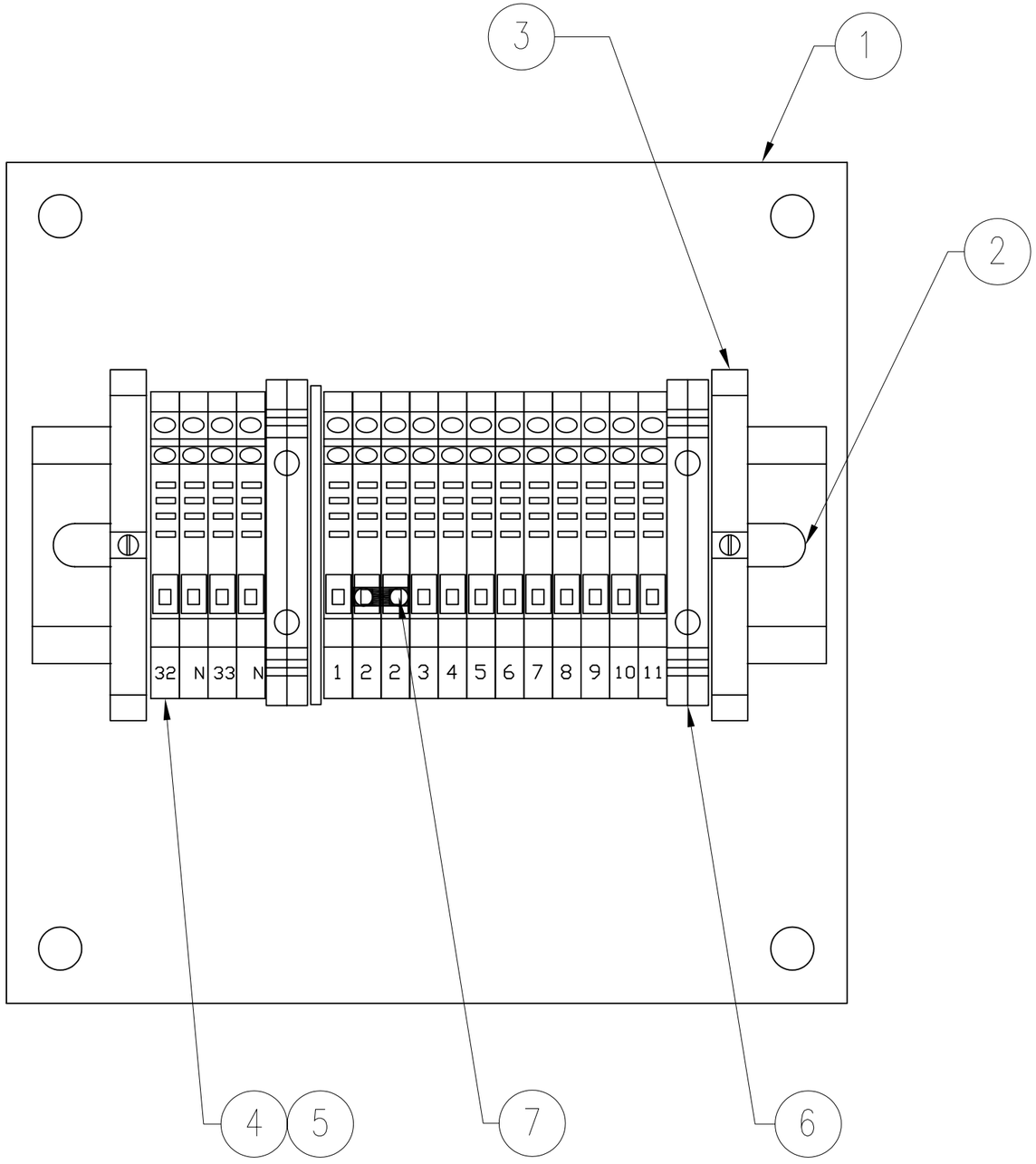

SEVERN TRENT SERVICES

CLORTEC

2660 COLUMBIA STREET, CALIFORNIA 90503

TELEPHONE No: (310) 618-9700 E-MAIL:
FAX No: (310) 618-9339 WEB SITE: www.severntrentservices.com

UNLESS OTHERWISE NOTED

NOTICE OF CONFIDENTIALITY

THIS DOCUMENT CONTAINS PROPRIETARY INFORMATION THAT IS AND SHALL REMAIN THE PROPERTY OF CLORTEC AND IS TO BE RETURNED IMMEDIATELY UPON REQUEST. ITS CONTENTS MAY NOT BE REPRODUCED, DISTRIBUTED, CIRCULATED, OR DISCLOSED TO THIRD PARTIES. RECIPIENT WILL NOT USE THIS INFORMATION FOR PURPOSES OTHER THAN INTENDED WITHOUT PRIOR WRITTEN CONSENT OF CLORTEC.

PANEL LAYOUT
NON-INTRINSIC
CELL RACK DEVICE BOX
P/N: 5000STD

SCALE:	CLORTEC JOB No:	SIZE:	REV:
NTS	STANDARD	B	1
DWG No: 5000STD-150-J400B.DWG		SHEET: 1 OF 1	

REV	DATE	DESCRIPTION	DRAWN BY	CHECKED BY	APPROVED BY
1	10/10/05	ISSUED FOR APPROVAL	JC		

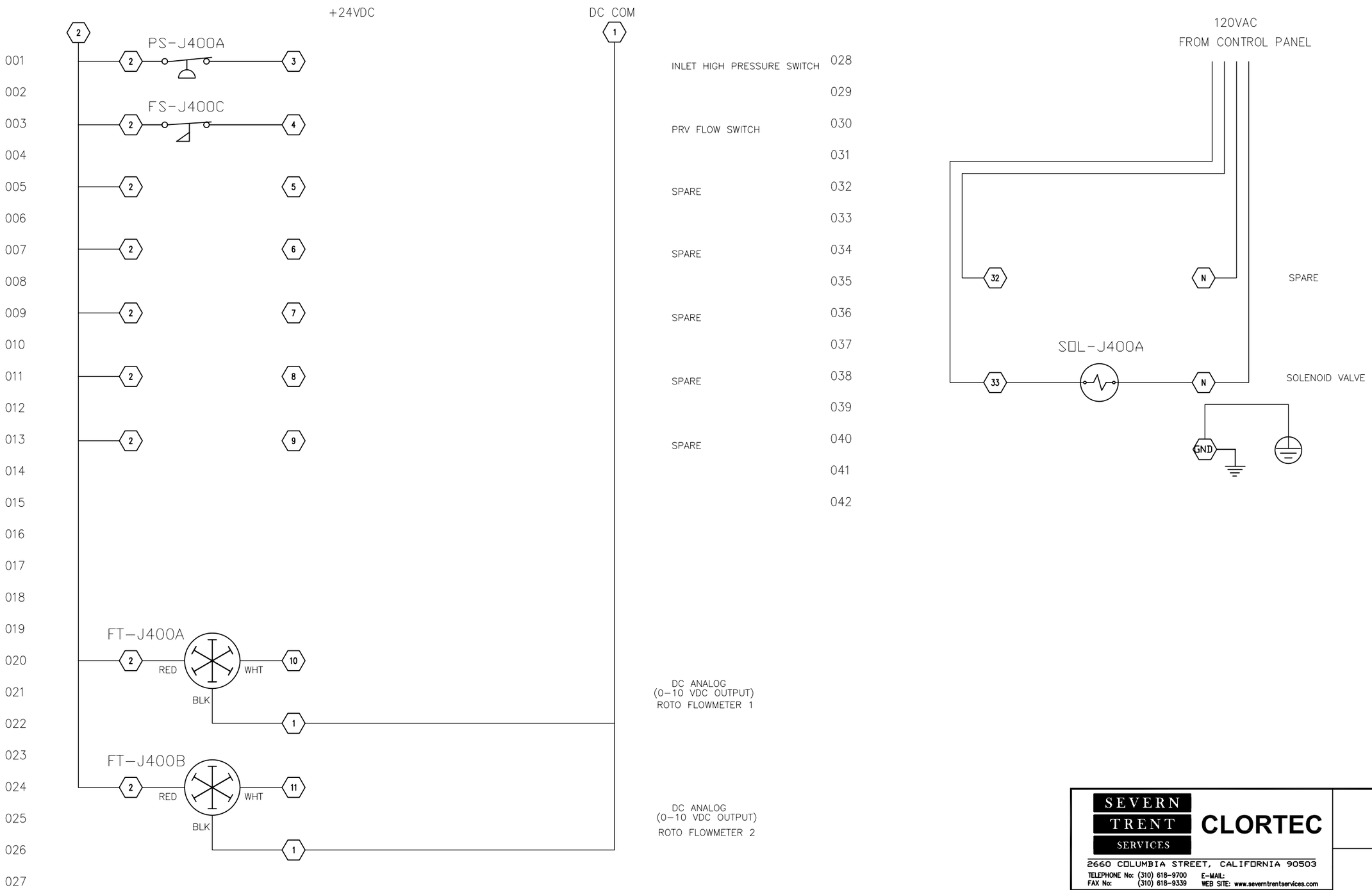

SEVERN TRENT SERVICES
CLORTEC
2660 COLUMBIA STREET, CALIFORNIA 90503
TELEPHONE No: (310) 618-9700
FAX No: (310) 618-9339
E-MAIL:
WEB SITE: www.severntrentservices.com

UNLESS OTHERWISE NOTED

NOTICE OF CONFIDENTIALITY
THIS DOCUMENT CONTAINS PROPRIETARY INFORMATION THAT IS AND SHALL REMAIN THE PROPERTY OF CLORTEC AND IS TO BE RETURNED IMMEDIATELY UPON REQUEST. ITS CONTENTS MAY NOT BE REPRODUCED, DISTRIBUTED, CIRCULATED, OR DISCLOSED TO THIRD PARTIES. RECIPIENT WILL NOT USE THIS INFORMATION FOR PURPOSES OTHER THAN INTENDED WITHOUT PRIOR WRITTEN CONSENT OF CLORTEC.

SCHEMATIC
NON-INTRINSIC
CELL RACK DEVICE BOX
P/N: 5000STD

SCALE:	CLORTEC JOB No:	SIZE:	REV:
NTS	STANDARD	B	1
DWG No: 5000STD-500-J400B.DWG		SHEET: 1 OF 1	

REV	DATE	DESCRIPTION	DRAWN BY	CHECKED BY	APPROVED BY
1	10/10/05	ISSUED FOR APPROVAL	JC		

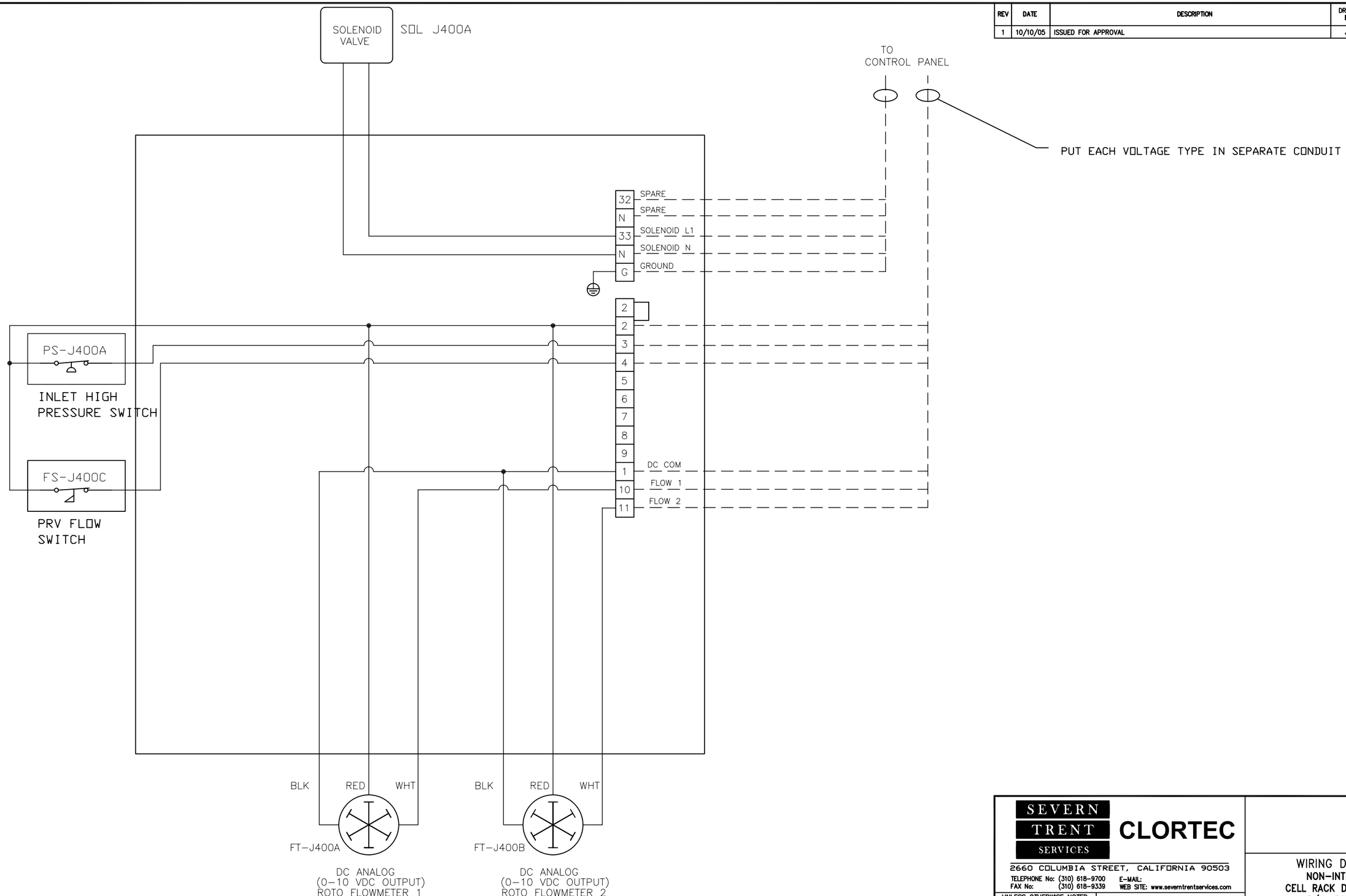

JUNCTION BOX JB-J400B

CLORTEC CT SKID

SEVERN TRENT SERVICES
CLORTEC
2660 COLUMBIA STREET, CALIFORNIA 90503
TELEPHONE No: (310) 618-9700
FAX No: (310) 618-9339
E-MAIL:
WEB SITE: www.severntrentservices.com

UNLESS OTHERWISE NOTED

NOTICE OF CONFIDENTIALITY

THIS DOCUMENT CONTAINS PROPRIETARY INFORMATION THAT IS AND SHALL REMAIN THE PROPERTY OF CLORTEC AND IS TO BE RETURNED IMMEDIATELY UPON REQUEST. ITS CONTENTS MAY NOT BE REPRODUCED, DISTRIBUTED, CIRCULATED, OR DISCLOSED TO THIRD PARTIES. RECIPIENT WILL NOT USE THIS INFORMATION FOR PURPOSES OTHER THAN INTENDED WITHOUT PRIOR WRITTEN CONSENT OF CLORTEC.

WIRING DIAGRAM
NON-INTRINSIC
CELL RACK DEVICE BOX
P/N: 5000STD

SCALE:	CLORTEC JOB No:	SIZE:	REV:
NTS	STANDARD	B	1

DWG No:	SHEET:
5000STD-505-J400B.DWG	1 OF 1

DWG# : 5000STD-100-J400B
REV : 1
DATE: 1/18/06
ORIGINATOR: JC

TITLE: NON-INTRINSIC,
CELL RACK DEVICE BOX

P/N: 5000STD

N/A#

ITEM	REF	DESCRIPTION	MFR	MFR P/N	CLORTEC P/N	QTY
1	ENC	ENCLOSURE, PAINTED STEEL, 6 X 6 X 4	HOFFMAN	A-606CHNF	5600-663	1
2	PNL	TERMINAL STRIP ASSEMBLY	CLORTEC	5000STD-150	REF	1
3	CON1&2	CORD GRIP, 1/2" HUB, .31"-.56"	T&B	2921NM	5500-974	2
4	CON 3	CORD GRIP, 1/2" HUB, .125"-.375"	T&B	2920NM	5500-975	2

DWG# : 5000STD-150-J400B
REV : 1
DATE: 1/18/06
ORIGINATOR: JC

TITLE: NON-INTRINSIC,
CELL RACK DEVICE BOX

P/N: 5000STD

N/A#

ITEM	REF	DESCRIPTION	MFR	MFR P/N	CLORTEC P/N	QTY
1	PAN	MOUNTING PAN 6x6	HOFFMAN	A-6P6	5600-664	1
2	RAIL	35mm DIN RAIL	ALLEN-BRADLEY	1492-DR1	2102-200	1
3	TB	TERMINAL, END ANCHOR	ALLEN-BRADLEY	1492-EAJ3	5500-526	2
4	TB	TERMINAL, SINGLE CIRCUIT	ALLEN-BRADLEY	1492-J4	5600-520	16
5	TB	END BARRIER, W3 STYLE	ALLEN-BRADLEY	1492-EBJ3	5500-531	2
6	TB	GROUND TERMINAL BLOCK, YELLOW/GREEN	ALLEN-BRADLEY	1492-JG4	5900-380	2
7	TB	CENTER JUMPERS, SINGLE CIRCUIT STYLE	ALLEN-BRADLEY	1492-CJJ6-10	5601-136	1

REV	DATE	DESCRIPTION	DRAWN BY	CHECKED BY	APPROVED BY
1	10/10/05	ISSUED FOR APPROVAL	JC		

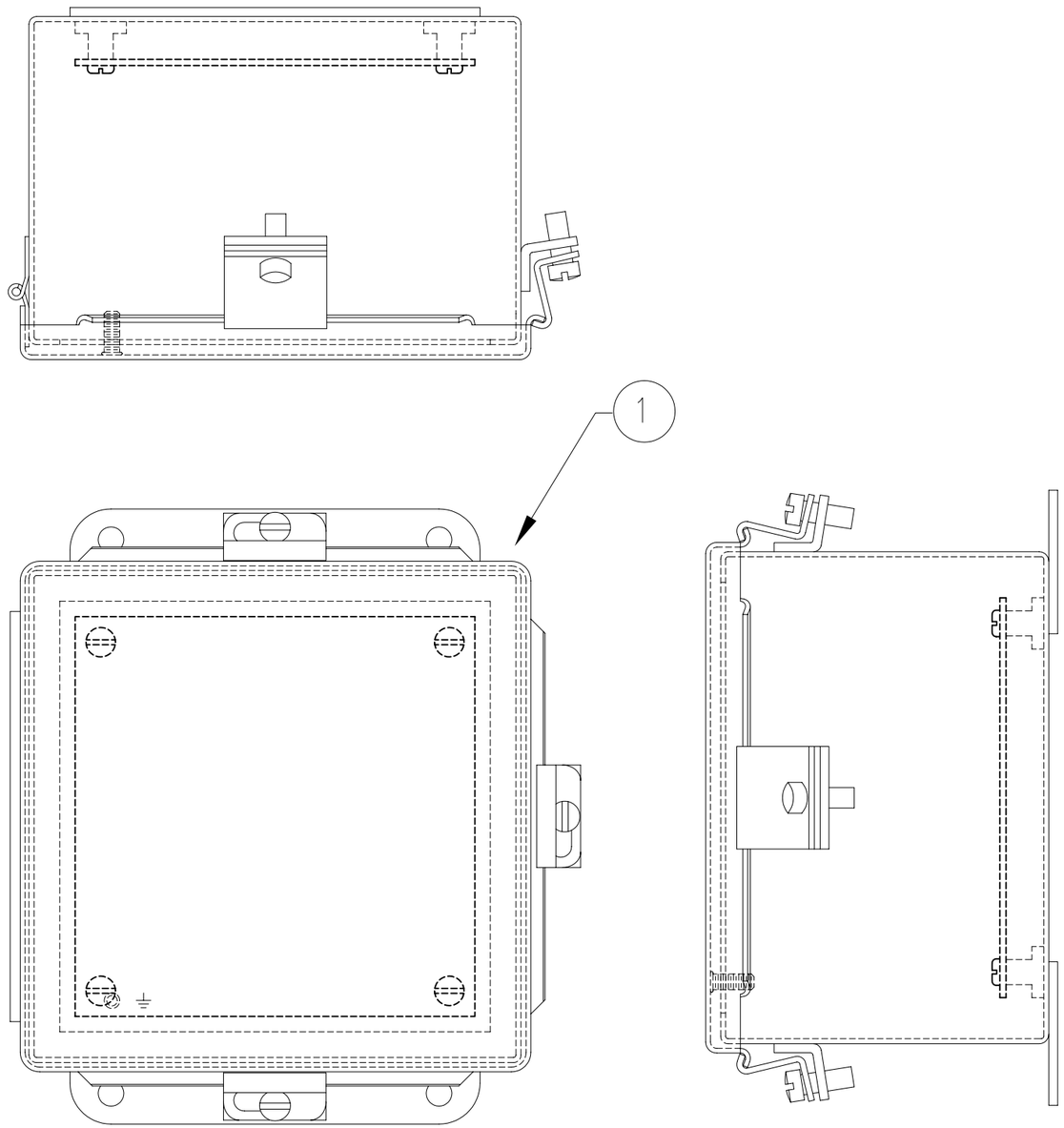

A-606CHNF

SEVERN TRENT SERVICES
CLORTEC
2660 COLUMBIA STREET, CALIFORNIA 90503
TELEPHONE No: (310) 618-9700
FAX No: (310) 618-9339
E-MAIL:
WEB SITE: www.severntrentservices.com

UNLESS OTHERWISE NOTED

NOTICE OF CONFIDENTIALITY
THIS DOCUMENT CONTAINS PROPRIETARY INFORMATION THAT IS AND SHALL REMAIN THE PROPERTY OF CLORTEC AND IS TO BE RETURNED IMMEDIATELY UPON REQUEST. ITS CONTENTS MAY NOT BE REPRODUCED, DISTRIBUTED, CIRCULATED, OR DISCLOSED TO THIRD PARTIES. RECIPIENT WILL NOT USE THIS INFORMATION FOR PURPOSES OTHER THAN INTENDED WITHOUT PRIOR WRITTEN CONSENT OF CLORTEC.

ENCLOSURE LAYOUT
NON-INTRINSIC
CELL RACK DEVICE BOX
P/N: 5000STD

SCALE:	CLORTEC JOB No:	SIZE:	REV:
NTS	STANDARD	B	1
DWG No: 5000STD-100-J420B.DWG		SHEET: 1 OF 1	

REV	DATE	DESCRIPTION	DRAWN BY	CHECKED BY	APPROVED BY
1	10/10/05	ISSUED FOR APPROVAL	JC		

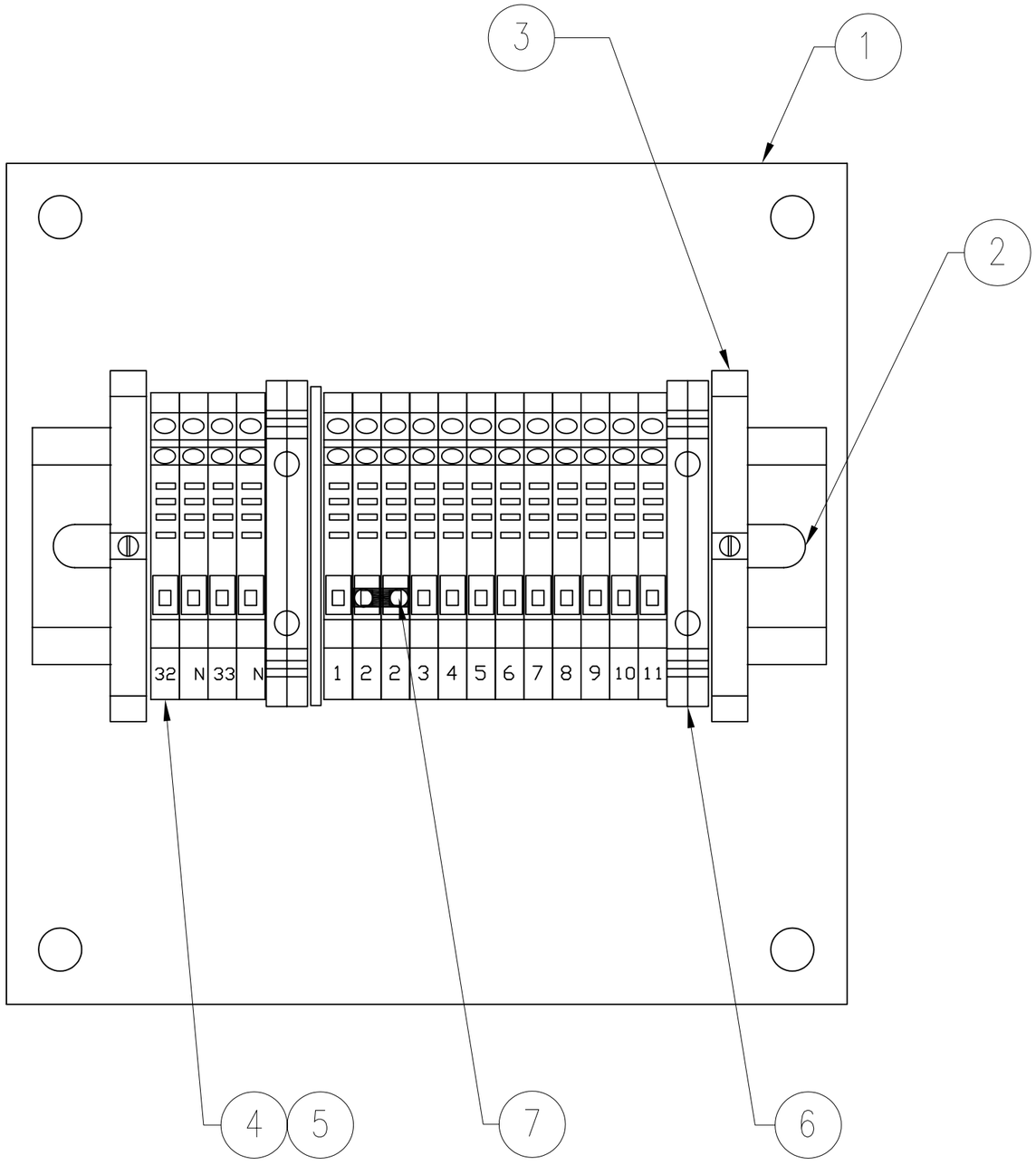

SEVERN TRENT SERVICES

CLORTEC

2660 COLUMBIA STREET, CALIFORNIA 90503

TELEPHONE No: (310) 618-9700 E-MAIL:
FAX No: (310) 618-9339 WEB SITE: www.severntrentservices.com

UNLESS OTHERWISE NOTED

NOTICE OF CONFIDENTIALITY

THIS DOCUMENT CONTAINS PROPRIETARY INFORMATION THAT IS AND SHALL REMAIN THE PROPERTY OF CLORTEC AND IS TO BE RETURNED IMMEDIATELY UPON REQUEST. ITS CONTENTS MAY NOT BE REPRODUCED, DISTRIBUTED, CIRCULATED, OR DISCLOSED TO THIRD PARTIES. RECIPIENT WILL NOT USE THIS INFORMATION FOR PURPOSES OTHER THAN INTENDED WITHOUT PRIOR WRITTEN CONSENT OF CLORTEC.

PANEL LAYOUT
NON-INTRINSIC
CELL RACK DEVICE BOX
P/N: 5000STD

SCALE:	CLORTEC JOB No:	SIZE:	REV:
NTS	STANDARD	B	1
DWG No: 5000STD-150-J420B.DWG		SHEET: 1 OF 1	

REV	DATE	DESCRIPTION	DRAWN BY	CHECKED BY	APPROVED BY
1	10/10/05	ISSUED FOR APPROVAL	JC		

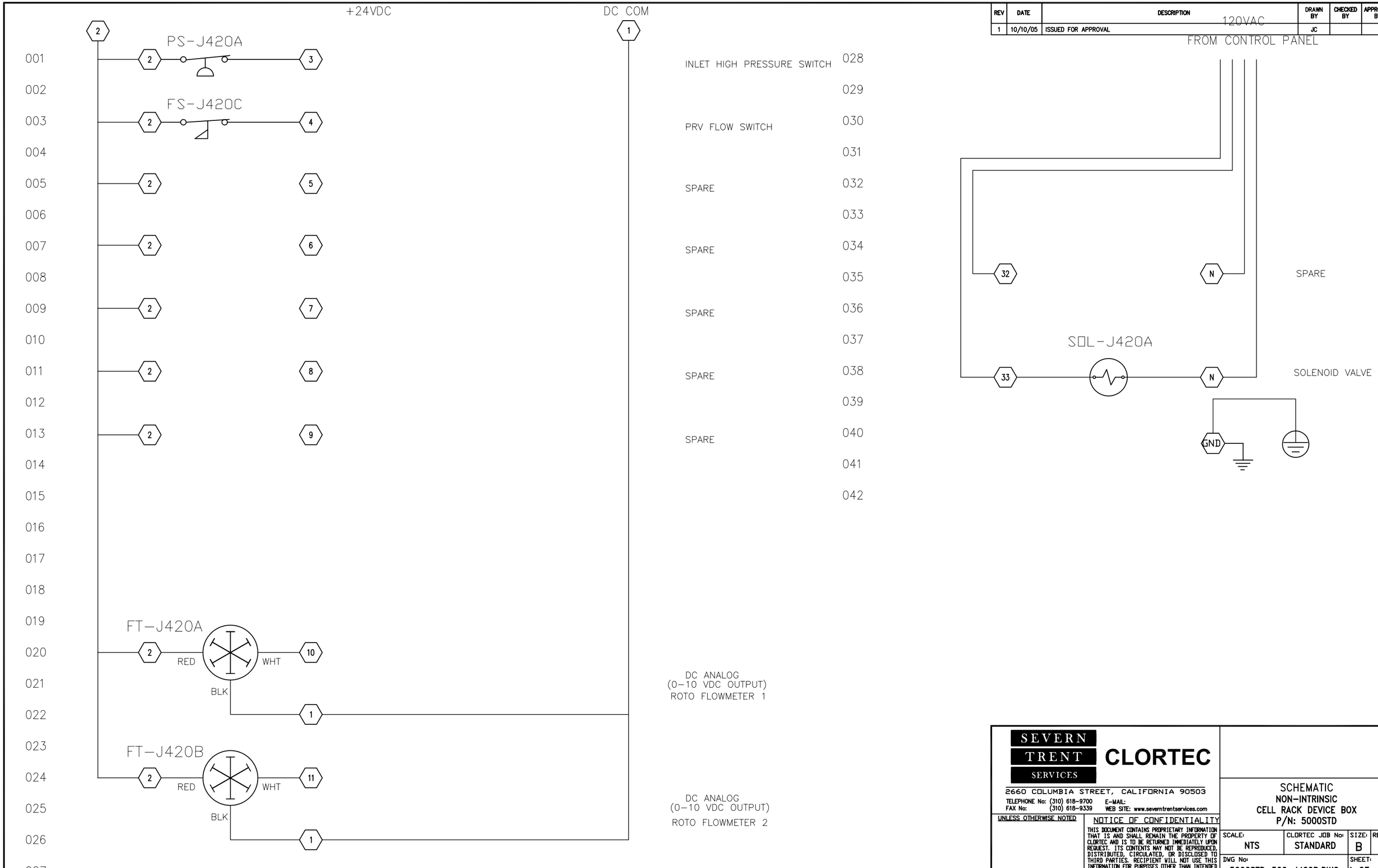

SEVERN TRENT SERVICES
CLORTEC
2660 COLUMBIA STREET, CALIFORNIA 90503
TELEPHONE No: (310) 618-9700 E-MAIL:
FAX No: (310) 618-9339 WEB SITE: www.severntrentservices.com

UNLESS OTHERWISE NOTED

NOTICE OF CONFIDENTIALITY
THIS DOCUMENT CONTAINS PROPRIETARY INFORMATION THAT IS AND SHALL REMAIN THE PROPERTY OF CLORTEC AND IS TO BE RETURNED IMMEDIATELY UPON REQUEST. ITS CONTENTS MAY NOT BE REPRODUCED, DISTRIBUTED, CIRCULATED, OR DISCLOSED TO THIRD PARTIES. RECIPIENT WILL NOT USE THIS INFORMATION FOR PURPOSES OTHER THAN INTENDED WITHOUT PRIOR WRITTEN CONSENT OF CLORTEC.

SCHEMATIC
NON-INTRINSIC
CELL RACK DEVICE BOX
P/N: 5000STD

SCALE:	CLORTEC JOB No:	SIZE:	REV:
NTS	STANDARD	B	1
DWG No: 5000STD-500-J420B.DWG		SHEET: 1 OF 1	

REV	DATE	DESCRIPTION	DRAWN BY	CHECKED BY	APPROVED BY
1	10/10/05	ISSUED FOR APPROVAL	JC		

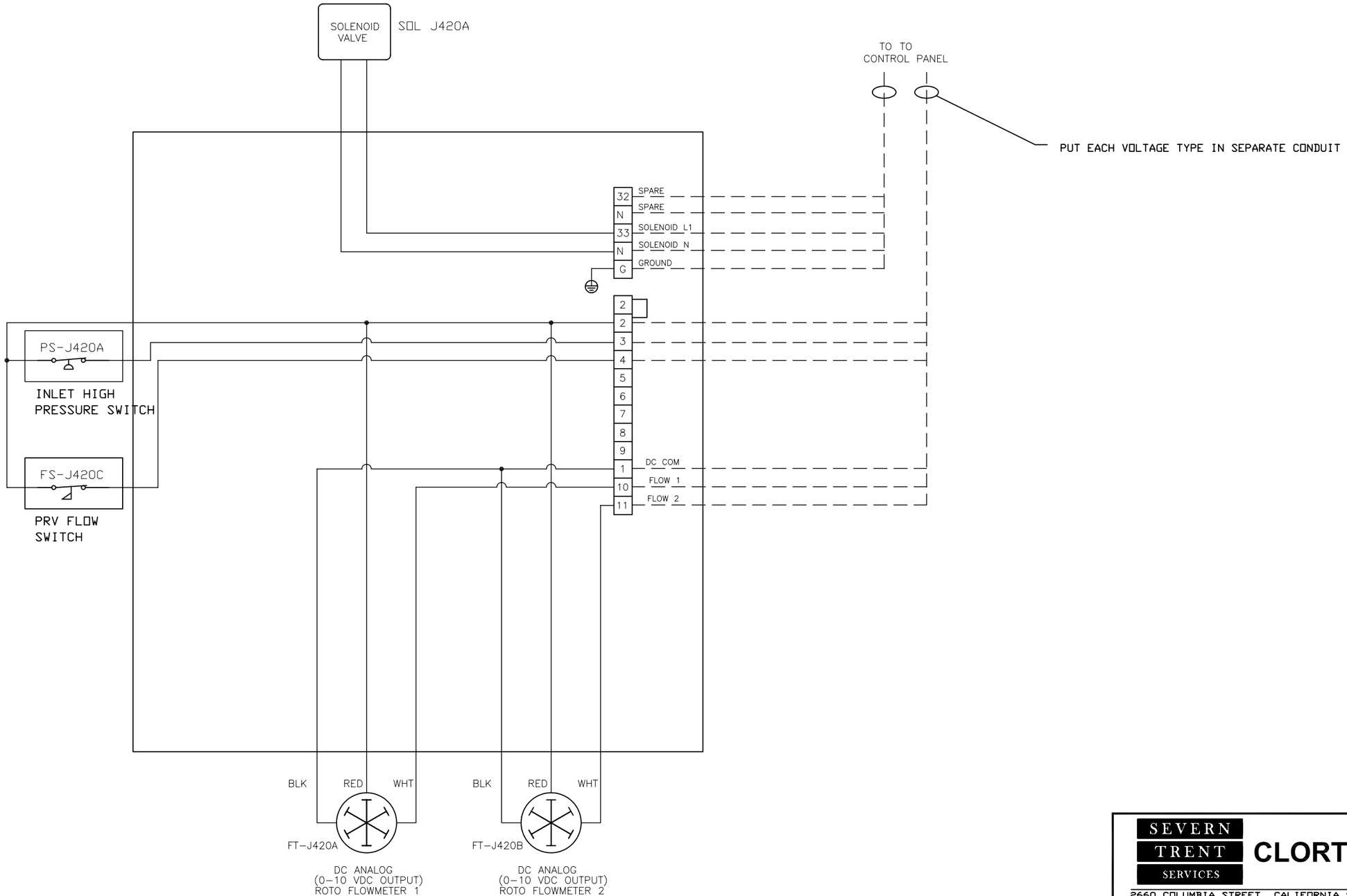

SEVERN TRENT SERVICES
CLORTEC
2660 COLUMBIA STREET, CALIFORNIA 90503
TELEPHONE No: (310) 618-9700
FAX No: (310) 618-9339
E-MAIL:
WEB SITE: www.severntrentservices.com

UNLESS OTHERWISE NOTED

NOTICE OF CONFIDENTIALITY

THIS DOCUMENT CONTAINS PROPRIETARY INFORMATION THAT IS AND SHALL REMAIN THE PROPERTY OF CLORTEC AND IS TO BE RETURNED IMMEDIATELY UPON REQUEST. ITS CONTENTS MAY NOT BE REPRODUCED, DISTRIBUTED, CIRCULATED, OR DISCLOSED TO THIRD PARTIES. RECIPIENT WILL NOT USE THIS INFORMATION FOR PURPOSES OTHER THAN INTENDED WITHOUT PRIOR WRITTEN CONSENT OF CLORTEC.

WIRING DIAGRAM
NON-INTRINSIC
CELL RACK DEVICE BOX
P/N: 5000STD

SCALE:	CLORTEC JOB No:	SIZE:	REV:
NTS	STANDARD	B	1
DWG No: 5000STD-505-J420B.DWG		SHEET: 1 OF 1	

DWG# : 5000STD-100-J420B
REV : 1
DATE: 1/18/06
ORIGINATOR: JC

TITLE: NON-INTRINSIC,
CELL RACK DEVICE BOX

P/N: 5000STD

N/A#

ITEM	REF	DESCRIPTION	MFR	MFR P/N	CLORTEC P/N	QTY
1	ENC	ENCLOSURE, PAINTED STEEL, 6 X 6 X 4	HOFFMAN	A-606CHNF	5600-663	1
2	PNL	TERMINAL STRIP ASSEMBLY	CLORTEC	5000STD-150	REF	1
3	CON1&2	CORD GRIP, 1/2" HUB, .31"-.56"	T&B	2921NM	5500-974	2
4	CON 3	CORD GRIP, 1/2" HUB, .125"-.375"	T&B	2920NM	5500-975	2

DWG# : 5000STD-150-J420B
REV : 1
DATE: 1/18/06
ORIGINATOR: JC

TITLE: NON-INTRINSIC,
CELL RACK DEVICE BOX

P/N: 5000STD

N/A#

ITEM	REF	DESCRIPTION	MFR	MFR P/N	CLORTEC P/N	QTY
1	PAN	MOUNTING PAN 6x6	HOFFMAN	A-6P6	5600-664	1
2	RAIL	35mm DIN RAIL	ALLEN-BRADLEY	1492-DR1	2102-200	1
3	TB	TERMINAL, END ANCHOR	ALLEN-BRADLEY	1492-EAJ3	5500-526	2
4	TB	TERMINAL, SINGLE CIRCUIT	ALLEN-BRADLEY	1492-J4	5600-520	16
5	TB	END BARRIER, W3 STYLE	ALLEN-BRADLEY	1492-EBJ3	5500-531	2
6	TB	GROUND TERMINAL BLOCK, YELLOW/GREEN	ALLEN-BRADLEY	1492-JG4	5900-380	2
7	TB	CENTER JUMPERS, SINGLE CIRCUIT STYLE	ALLEN-BRADLEY	1492-CJJ6-10	5601-136	1

REV	DATE	DESCRIPTION	DRAWN BY	CHECKED BY	APPROVED BY
1	10/10/05	ISSUED FOR APPROVAL	JC		

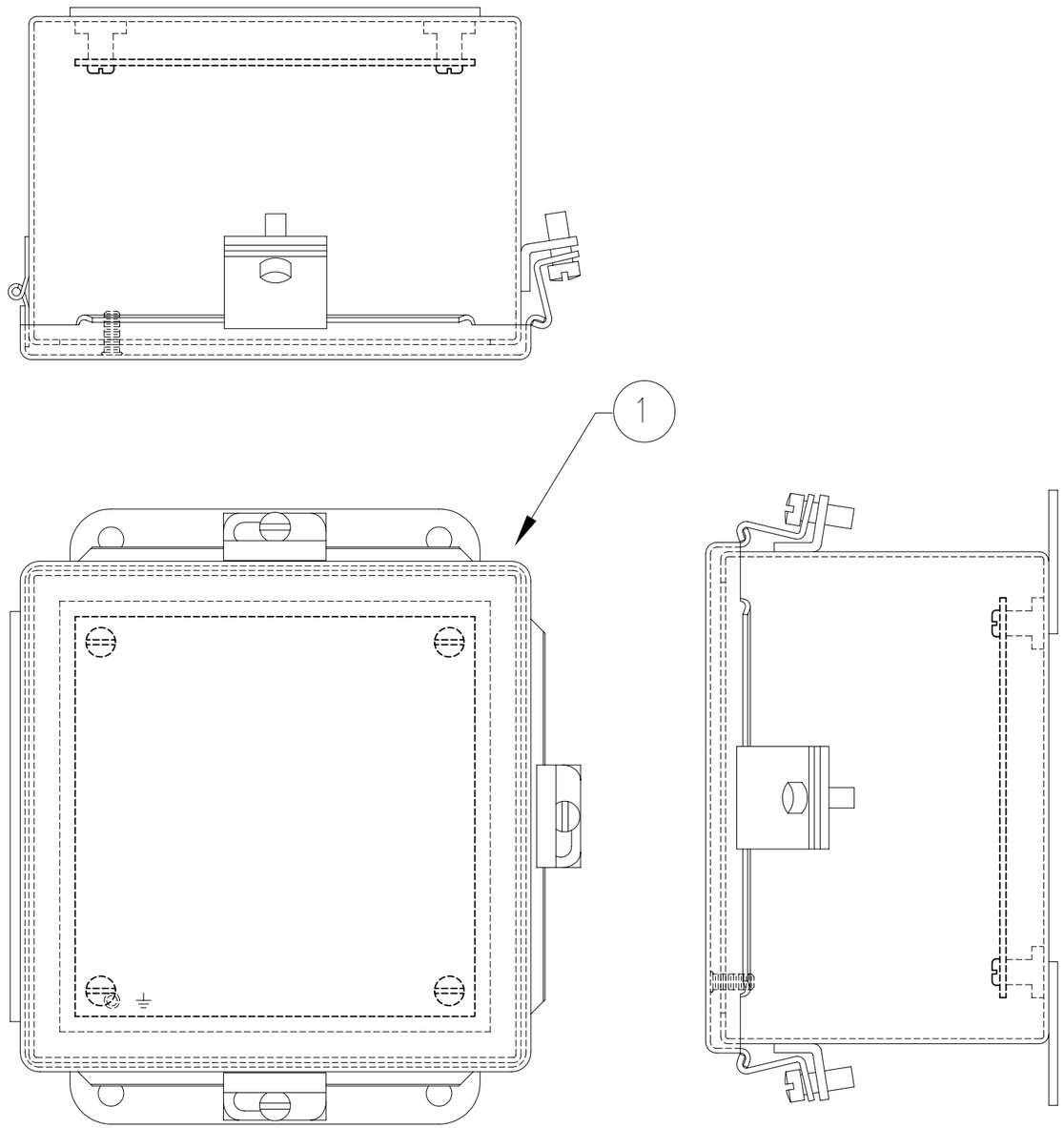

A-606CHNF

SEVERN TRENT SERVICES
CLORTEC
2660 COLUMBIA STREET, CALIFORNIA 90503
TELEPHONE No: (310) 618-9700
FAX No: (310) 618-9339
E-MAIL:
WEB SITE: www.severntrentservices.com

UNLESS OTHERWISE NOTED

NOTICE OF CONFIDENTIALITY
THIS DOCUMENT CONTAINS PROPRIETARY INFORMATION THAT IS AND SHALL REMAIN THE PROPERTY OF CLORTEC AND IS TO BE RETURNED IMMEDIATELY UPON REQUEST. ITS CONTENTS MAY NOT BE REPRODUCED, DISTRIBUTED, CIRCULATED, OR DISCLOSED TO THIRD PARTIES. RECIPIENT WILL NOT USE THIS INFORMATION FOR PURPOSES OTHER THAN INTENDED WITHOUT PRIOR WRITTEN CONSENT OF CLORTEC.

ENCLOSURE LAYOUT
NON-INTRINSIC
CELL RACK DEVICE BOX
P/N: 5000STD

SCALE:	CLORTEC JOB No:	SIZE:	REV:
NTS	STANDARD	B	1
DWG No: 5000STD-100-J420B.DWG		SHEET: 1 OF 1	

REV	DATE	DESCRIPTION	DRAWN BY	CHECKED BY	APPROVED BY
1	10/10/05	ISSUED FOR APPROVAL	JC		

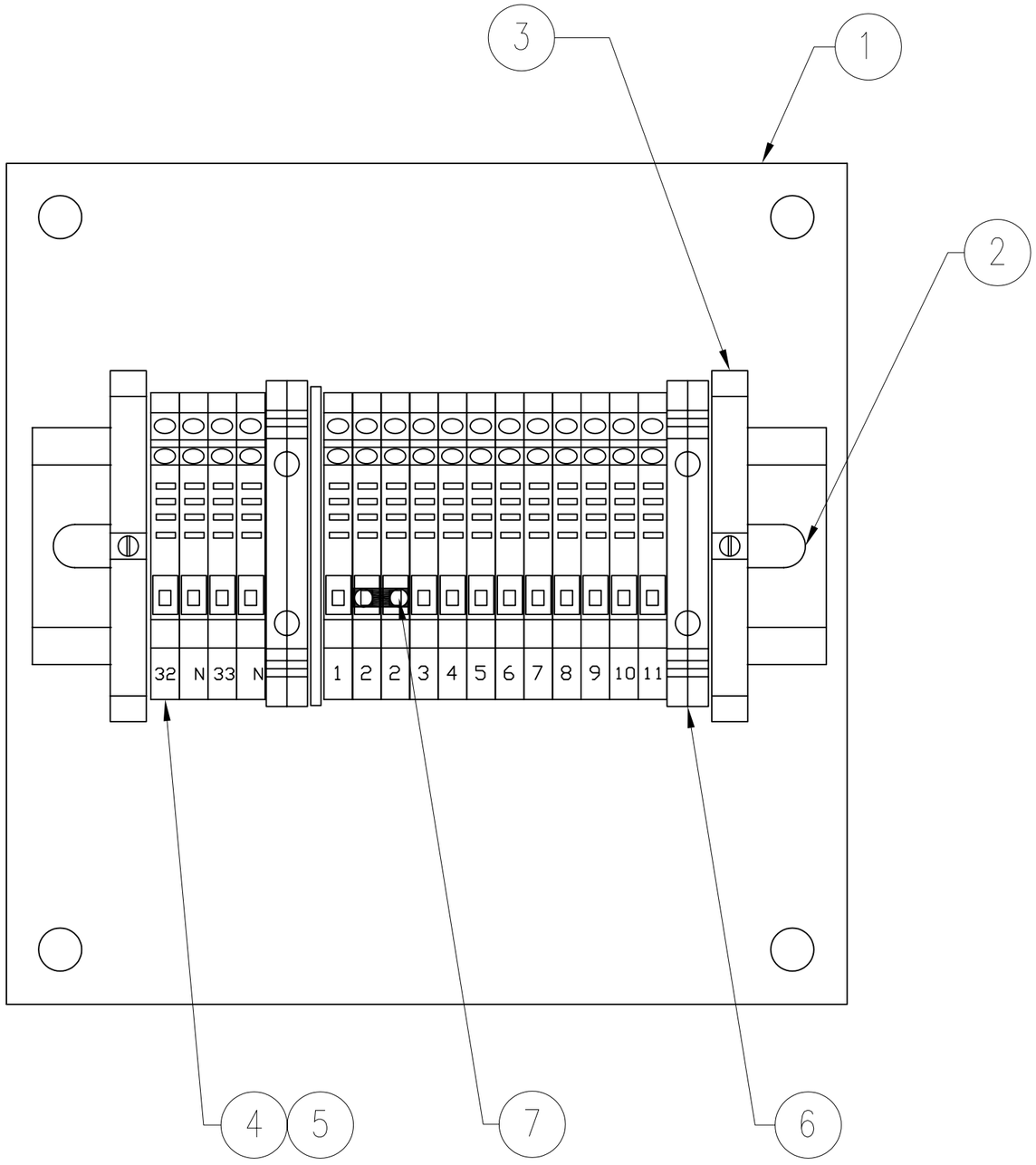

SEVERN TRENT SERVICES

CLORTEC

2660 COLUMBIA STREET, CALIFORNIA 90503

TELEPHONE No: (310) 618-9700 E-MAIL:
FAX No: (310) 618-9339 WEB SITE: www.severntrentservices.com

UNLESS OTHERWISE NOTED

NOTICE OF CONFIDENTIALITY

THIS DOCUMENT CONTAINS PROPRIETARY INFORMATION THAT IS AND SHALL REMAIN THE PROPERTY OF CLORTEC AND IS TO BE RETURNED IMMEDIATELY UPON REQUEST. ITS CONTENTS MAY NOT BE REPRODUCED, DISTRIBUTED, CIRCULATED, OR DISCLOSED TO THIRD PARTIES. RECIPIENT WILL NOT USE THIS INFORMATION FOR PURPOSES OTHER THAN INTENDED WITHOUT PRIOR WRITTEN CONSENT OF CLORTEC.

PANEL LAYOUT
NON-INTRINSIC
CELL RACK DEVICE BOX
P/N: 5000STD

SCALE:	CLORTEC JOB No:	SIZE:	REV:
NTS	STANDARD	B	1
DWG No: 5000STD-150-J440B.DWG		SHEET: 1 OF 1	

REV	DATE	DESCRIPTION	DRAWN BY	CHECKED BY	APPROVED BY
1	10/10/05	ISSUED FOR APPROVAL	JC		

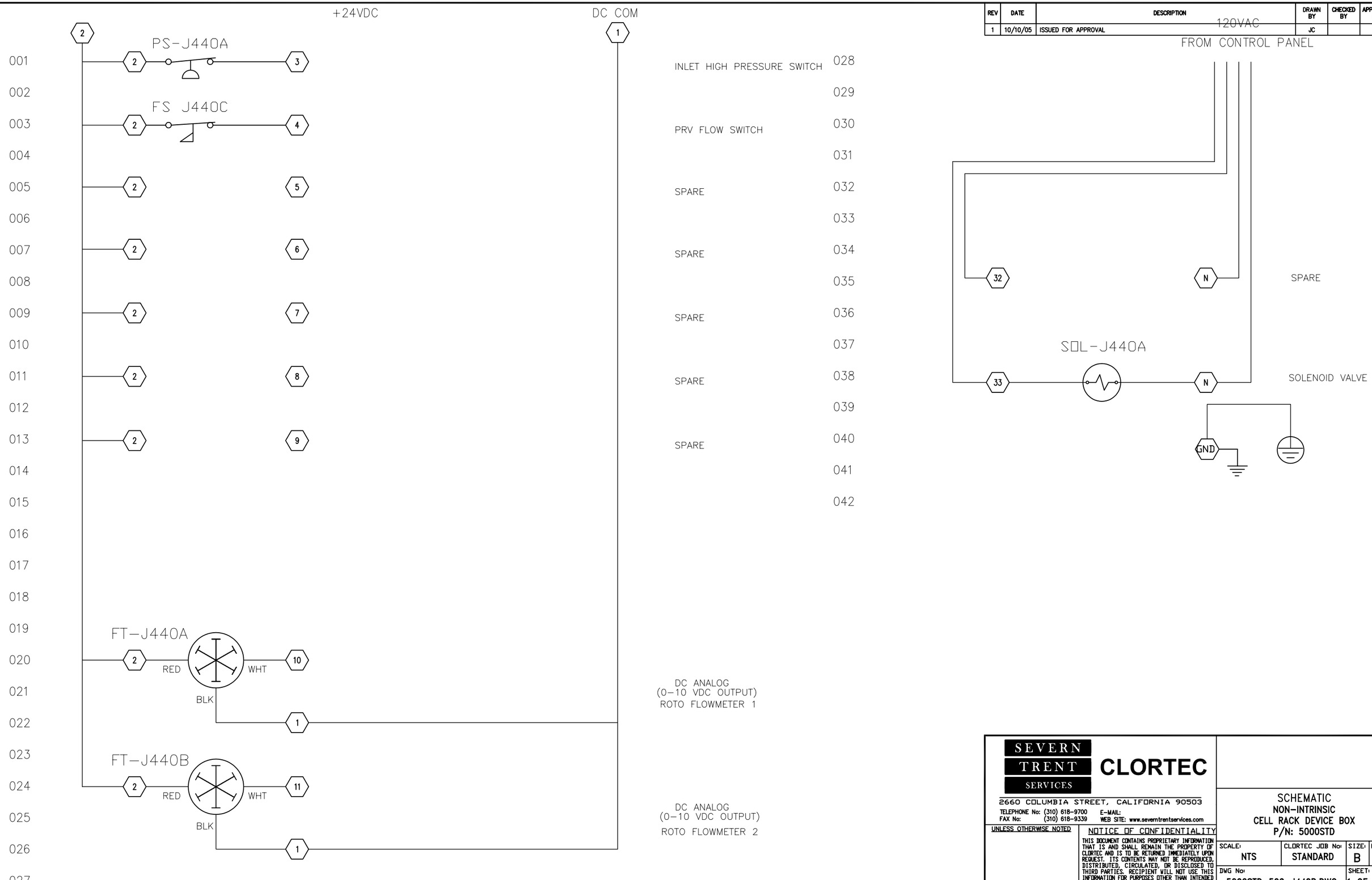

SEVERN TRENT SERVICES

CLORTEC

2660 COLUMBIA STREET, CALIFORNIA 90503

TELEPHONE No: (310) 618-9700 E-MAIL:
FAX No: (310) 618-9339 WEB SITE: www.severntrentservices.com

UNLESS OTHERWISE NOTED

NOTICE OF CONFIDENTIALITY

THIS DOCUMENT CONTAINS PROPRIETARY INFORMATION THAT IS AND SHALL REMAIN THE PROPERTY OF CLORTEC AND IS TO BE RETURNED IMMEDIATELY UPON REQUEST. ITS CONTENTS MAY NOT BE REPRODUCED, DISTRIBUTED, CIRCULATED, OR DISCLOSED TO THIRD PARTIES. RECIPIENT WILL NOT USE THIS INFORMATION FOR PURPOSES OTHER THAN INTENDED WITHOUT PRIOR WRITTEN CONSENT OF CLORTEC.

SCHEMATIC
NON-INTRINSIC
CELL RACK DEVICE BOX
P/N: 5000STD

SCALE:	CLORTEC JOB No:	SIZE:	REV:
NTS	STANDARD	B	1
DWG No: 5000STD-500-J440B.DWG		SHEET: 1 OF 1	

DWG# : 5000STD-100-J440B
REV : 1
DATE: 1/18/06
ORIGINATOR: JC

TITLE: NON-INTRINSIC,
CELL RACK DEVICE BOX

P/N: 5000STD

N/A#

ITEM	REF	DESCRIPTION	MFR	MFR P/N	CLORTEC P/N	QTY
1	ENC	ENCLOSURE, PAINTED STEEL, 6 X 6 X 4	HOFFMAN	A-606CHNF	5600-663	1
2	PNL	TERMINAL STRIP ASSEMBLY	CLORTEC	5000STD-150	REF	1
3	CON1&2	CORD GRIP, 1/2" HUB, .31"-.56"	T&B	2921NM	5500-974	2
4	CON 3	CORD GRIP, 1/2" HUB, .125"-.375"	T&B	2920NM	5500-975	2

REV	DATE	DESCRIPTION	DRAWN BY	CHECKED BY	APPROVED BY
1	10/10/05	ISSUED FOR APPROVAL	JC		

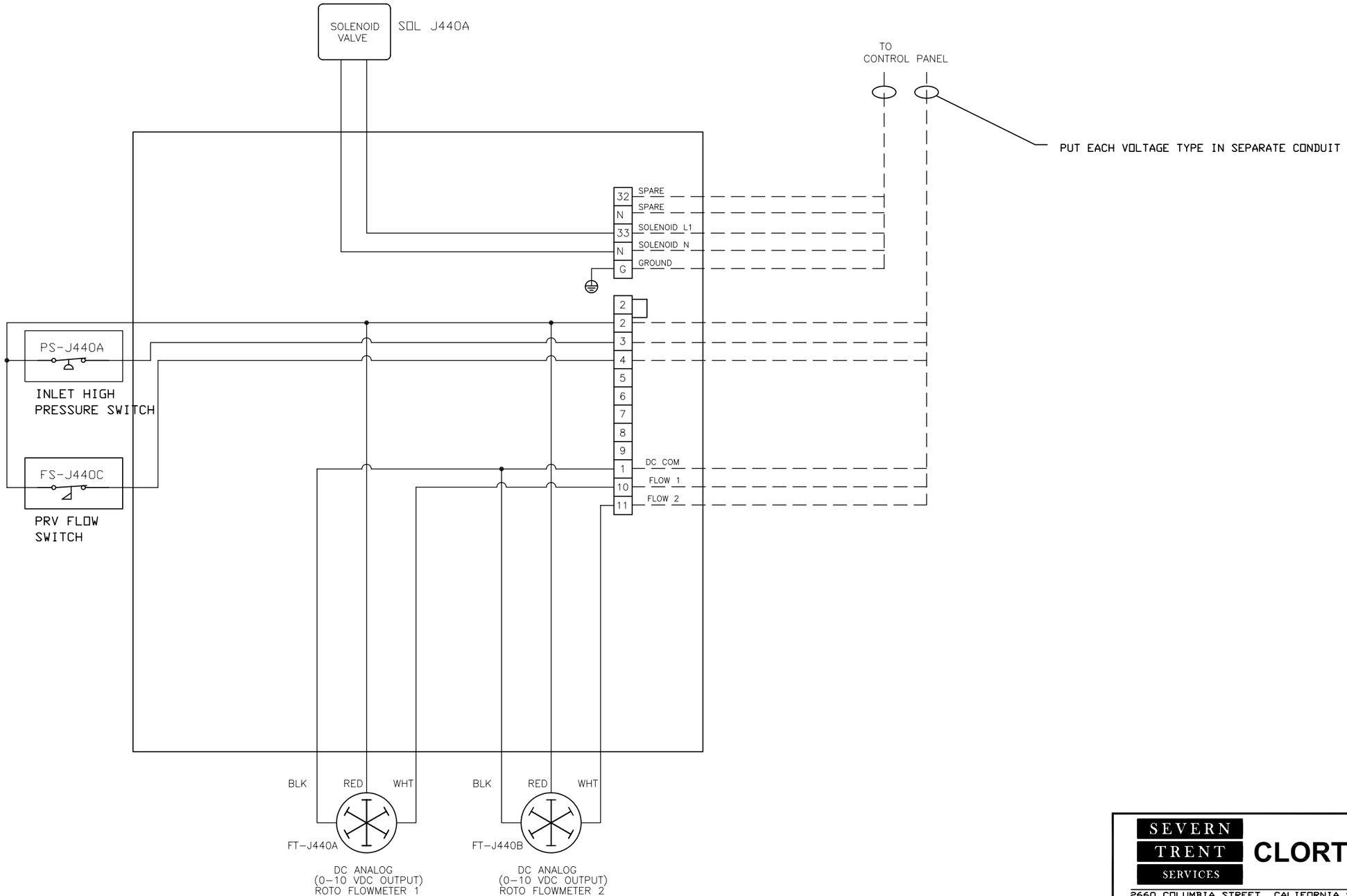

SEVERN TRENT SERVICES
CLORTEC
2660 COLUMBIA STREET, CALIFORNIA 90503
TELEPHONE No: (310) 618-9700
FAX No: (310) 618-9339
E-MAIL:
WEB SITE: www.severntrentservices.com

UNLESS OTHERWISE NOTED

NOTICE OF CONFIDENTIALITY

THIS DOCUMENT CONTAINS PROPRIETARY INFORMATION THAT IS AND SHALL REMAIN THE PROPERTY OF CLORTEC AND IS TO BE RETURNED IMMEDIATELY UPON REQUEST. ITS CONTENTS MAY NOT BE REPRODUCED, DISTRIBUTED, CIRCULATED, OR DISCLOSED TO THIRD PARTIES. RECIPIENT WILL NOT USE THIS INFORMATION FOR PURPOSES OTHER THAN INTENDED WITHOUT PRIOR WRITTEN CONSENT OF CLORTEC.

WIRING DIAGRAM
NON-INTRINSIC
CELL RACK DEVICE BOX
P/N: 5000STD

SCALE:	CLORTEC JOB No:	SIZE:	REV:
NTS	STANDARD	B	1
DWG No: 5000STD-505-J440B.DWG		SHEET: 1 OF 1	

DWG# : 5000STD-150-J440B
REV : 1
DATE: 1/18/06
ORIGINATOR: JC

TITLE: NON-INTRINSIC,
CELL RACK DEVICE BOX

P/N: 5000STD

N/A#

ITEM	REF	DESCRIPTION	MFR	MFR P/N	CLORTEC P/N	QTY
1	PAN	MOUNTING PAN 6x6	HOFFMAN	A-6P6	5600-664	1
2	RAIL	35mm DIN RAIL	ALLEN-BRADLEY	1492-DR1	2102-200	1
3	TB	TERMINAL, END ANCHOR	ALLEN-BRADLEY	1492-EAJ3	5500-526	2
4	TB	TERMINAL, SINGLE CIRCUIT	ALLEN-BRADLEY	1492-J4	5600-520	16
5	TB	END BARRIER, W3 STYLE	ALLEN-BRADLEY	1492-EBJ3	5500-531	2
6	TB	GROUND TERMINAL BLOCK, YELLOW/GREEN	ALLEN-BRADLEY	1492-JG4	5900-380	2
7	TB	CENTER JUMPERS, SINGLE CIRCUIT STYLE	ALLEN-BRADLEY	1492-CJJ6-10	5601-136	1

REV	DATE	DESCRIPTION	DRAWN BY	CHECKED BY	APPROVED BY
1	1/18/06	ISSUED FOR APPROVAL	JC		

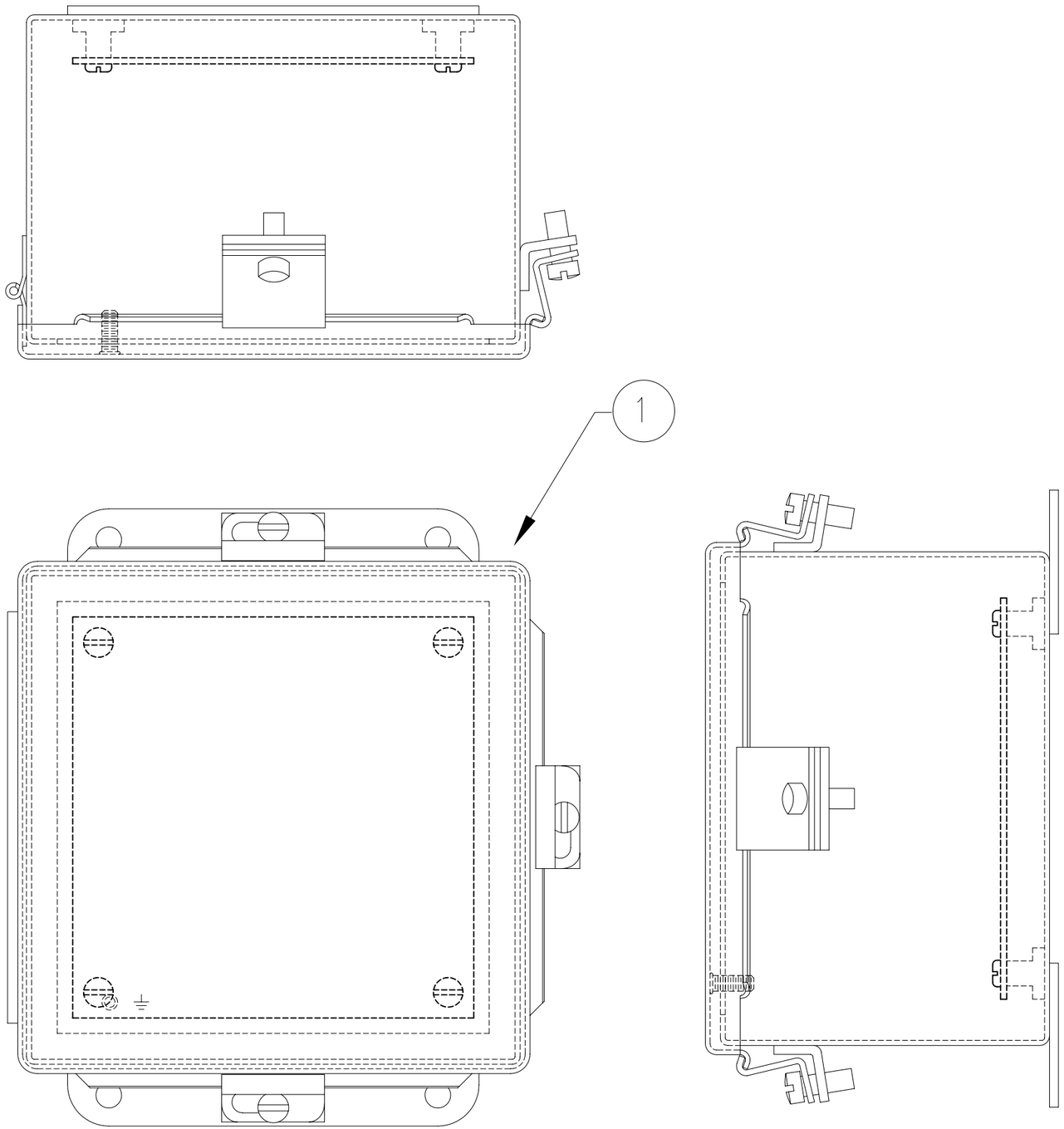

A-606CHNF

SEVERN TRENT SERVICES
CLORTEC
2660 COLUMBIA STREET, CALIFORNIA 90503
TELEPHONE No: (310) 618-9700
FAX No: (310) 618-9339
E-MAIL:
WEB SITE: www.severntrentservices.com

UNLESS OTHERWISE NOTED

NOTICE OF CONFIDENTIALITY
THIS DOCUMENT CONTAINS PROPRIETARY INFORMATION THAT IS AND SHALL REMAIN THE PROPERTY OF CLORTEC AND IS TO BE RETURNED IMMEDIATELY UPON REQUEST. ITS CONTENTS MAY NOT BE REPRODUCED, DISTRIBUTED, CIRCULATED, OR DISCLOSED TO THIRD PARTIES. RECIPIENT WILL NOT USE THIS INFORMATION FOR PURPOSES OTHER THAN INTENDED WITHOUT PRIOR WRITTEN CONSENT OF CLORTEC.

ISR ENCLOSURE
INTRINSIC BOX
2 DIGITAL INPUT
P/N: 5094STD

SCALE:	CLORTEC JOB No:	SIZE:	REV:
NTS	STANDARD	B	1
DWG No: 5094STD-100-J450A.DWG		SHEET: 1 OF 1	

REV	DATE	DESCRIPTION	DRAWN BY	CHECKED BY	APPROVED BY
1	4/7/06	ISSUED FOR APPROVAL	JC		

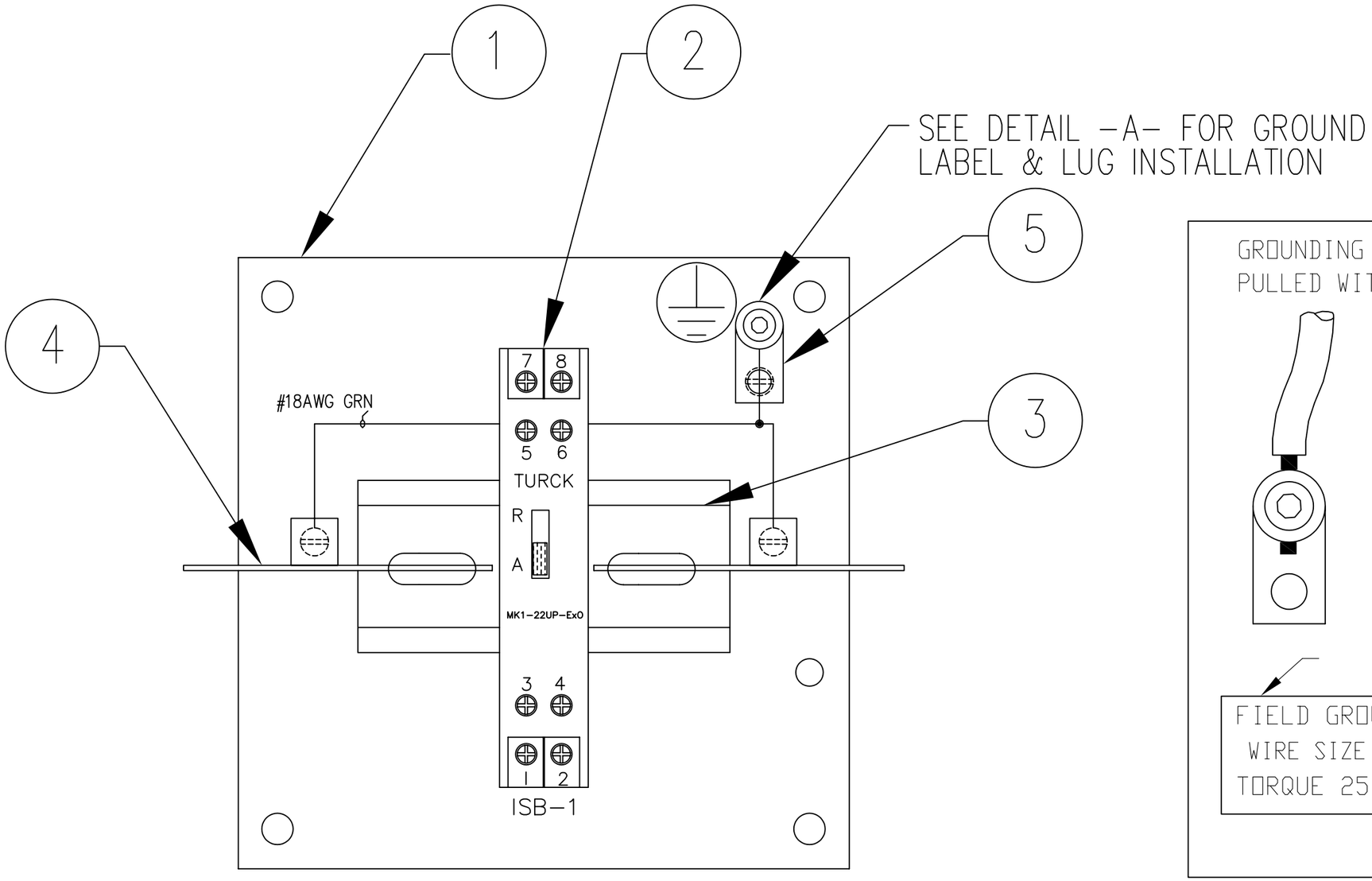

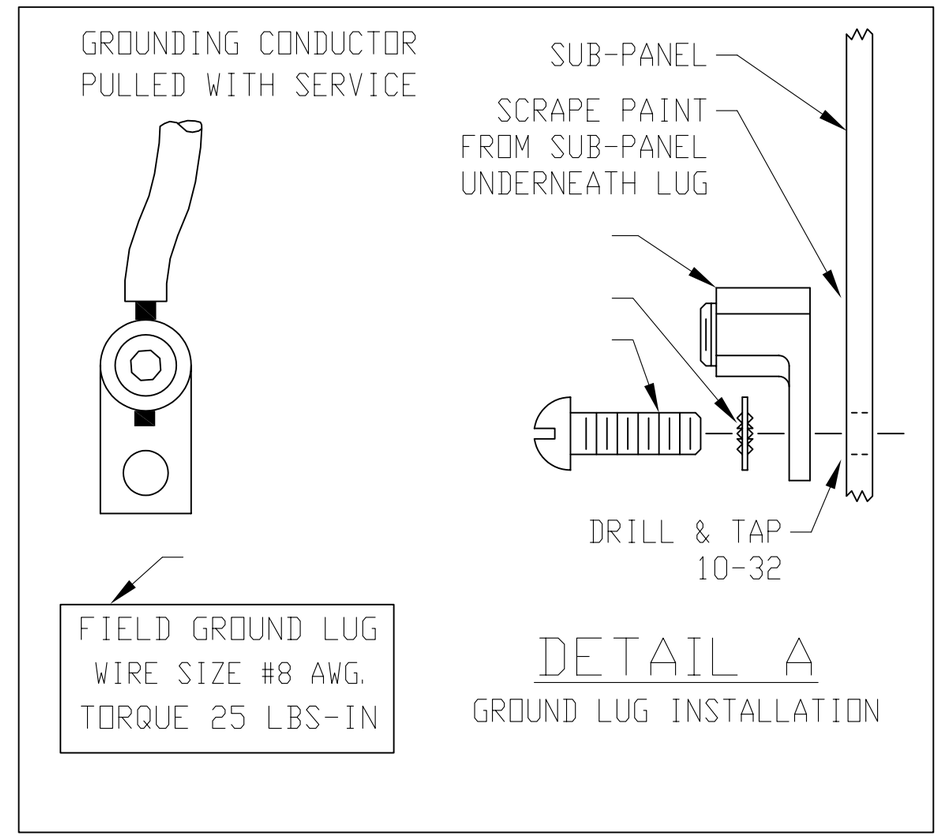

A-6P6

SEVERN TRENT SERVICES
CLORTEC
2660 COLUMBIA STREET, CALIFORNIA 90503
TELEPHONE No: (310) 618-9700
FAX No: (310) 618-9339
E-MAIL:
WEB SITE: www.severntrentservices.com

UNLESS OTHERWISE NOTED

NOTICE OF CONFIDENTIALITY

THIS DOCUMENT CONTAINS PROPRIETARY INFORMATION THAT IS AND SHALL REMAIN THE PROPERTY OF CLORTEC AND IS TO BE RETURNED IMMEDIATELY UPON REQUEST. ITS CONTENTS MAY NOT BE REPRODUCED, DISTRIBUTED, CIRCULATED, OR DISCLOSED TO THIRD PARTIES. RECIPIENT WILL NOT USE THIS INFORMATION FOR PURPOSES OTHER THAN INTENDED WITHOUT PRIOR WRITTEN CONSENT OF CLORTEC.

PANEL LAYOUT, ISR
INTRINSIC BOX
2 DIGITAL INPUT
P/N: 5094STD

SCALE:	CLORTEC JOB No:	SIZE:	REV:
NTS	STANDARD	B	1
DWG No: 5094STD-150-J450A.DWG		SHEET: 1 OF 1	

REV	DATE	DESCRIPTION	DRAWN BY	CHECKED BY	APPROVED BY
1	1/18/06	ISSUED FOR APPROVAL	JC		

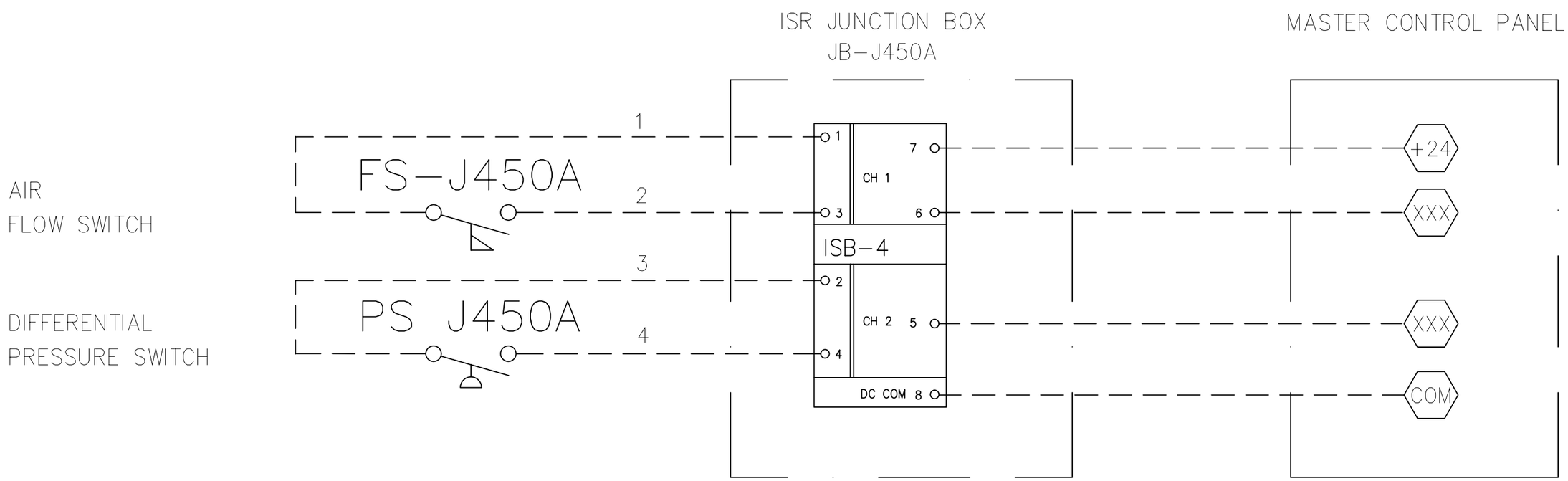

SEVERN TRENT SERVICES **CLORTEC**

2660 COLUMBIA STREET, CALIFORNIA 90503
TELEPHONE No: (310) 618-9700 E-MAIL:
FAX No: (310) 618-9339 WEB SITE: www.severntrentservices.com

UNLESS OTHERWISE NOTED

NOTICE OF CONFIDENTIALITY

THIS DOCUMENT CONTAINS PROPRIETARY INFORMATION THAT IS AND SHALL REMAIN THE PROPERTY OF CLORTEC AND IS TO BE RETURNED IMMEDIATELY UPON REQUEST. ITS CONTENTS MAY NOT BE REPRODUCED, DISTRIBUTED, CIRCULATED, OR DISCLOSED TO THIRD PARTIES. RECIPIENT WILL NOT USE THIS INFORMATION FOR PURPOSES OTHER THAN INTENDED WITHOUT PRIOR WRITTEN CONSENT OF CLORTEC.

SCHEMATIC
INTRINSICALLY SAFE RELAY BOX
2 DIGITAL INPUT
P/N: 5094STD

SCALE:	CLORTEC JOB No:	SIZE:	REV:
NTS	STANDARD	B	1
DWG No: 5094STD-500-J450A.DWG		SHEET: 1 OF 1	

DWG# : 5094STD-100-J450A
REV : 1
DATE: 1/18/06
ORIGINATOR: JC

TITLE: 2 DIGITAL INPUT,
INTRINSIC BOX

P/N: 5094STD

N/A#

ITEM	REF	DESCRIPTION	MFR	MFR P/N	CLORTEC P/N	QTY
1	ENC	ENCLOSURE, PAINTED STEEL, NEMA 4, 6"x6"x4"	HOFFMAN	A-606CHNF	5600-663	1

DWG# : 5094STD-150-J450A
REV : 1
DATE: 1/18/06
ORIGINATOR: JC

TITLE: 2 DIGITAL INPUT,
INTRINSIC BOX

P/N: 5094STD

N/A#

ITEM	REF	DESCRIPTION	MFR	MFR P/N	CLORTEC P/N	QTY
1	PAN	MOUNTING PAN 6x6	HOFFMAN	A-6P6	5600-664	1
2	ISB-1	INTRINSIC SAFETY BARRIER, DUAL, 24VDC	TURCK	MK122UPEX0/24VDC	5500-425	1
3	MISC	DIN RAIL, SLOTTED	ALLEN-BRADLEY	199-DR1	2102-200	1
4	PRT	PARTICIAN, INTRINSIC, 1 BARRIER	CLORTEC	CLORTEC	5600-957	1
5	GND	LUG, BARREL POST, ONE HOLE, STRAIGHT TONGUE, #8STR	PANDUIT	ML8-C	5600-956	1

REV	DATE	DESCRIPTION	DRAWN BY	CHECKED BY	APPROVED BY
1	1/18/06	ISSUED FOR APPROVAL	JC		

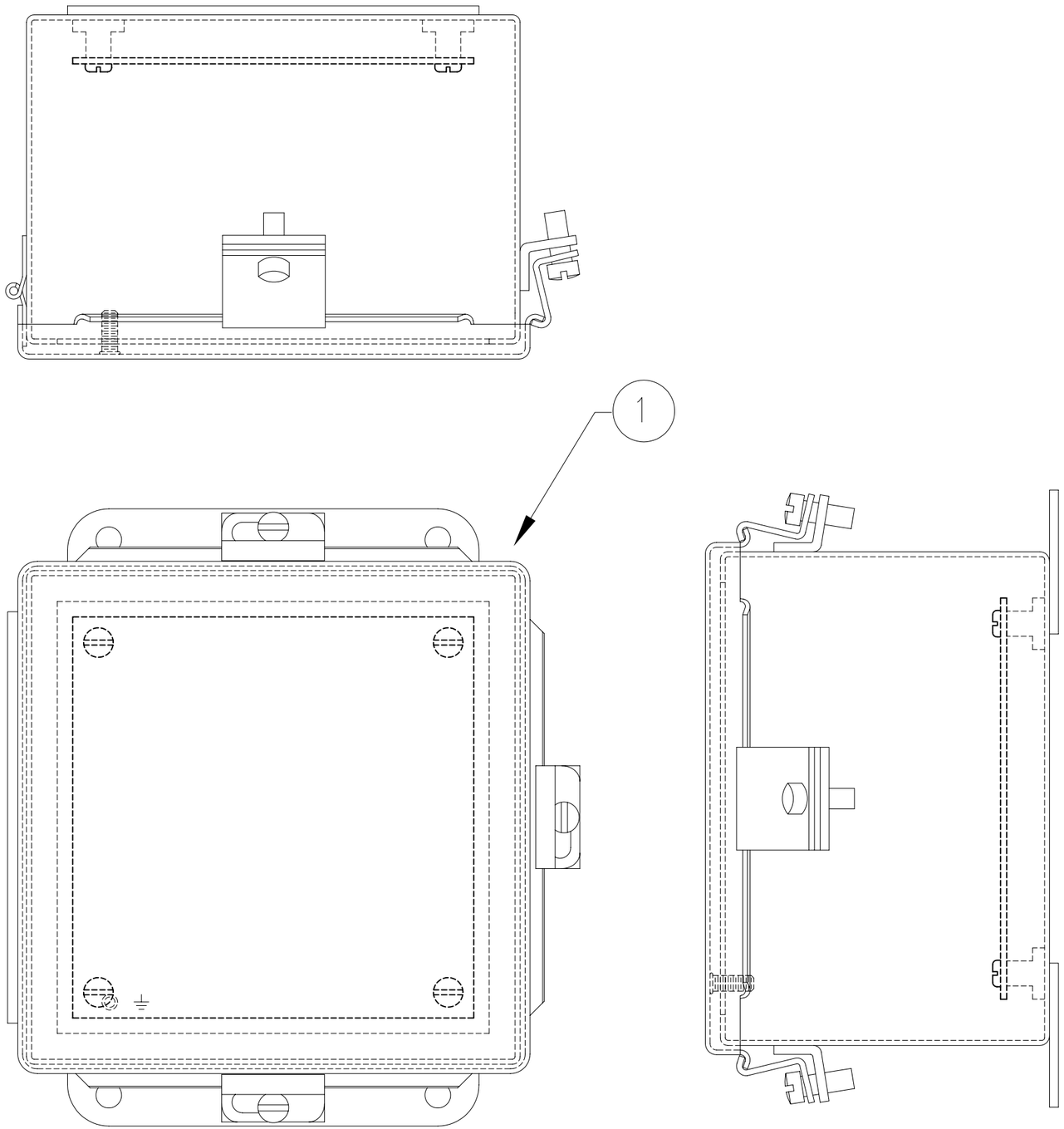

A-606CHNF

SEVERN TRENT SERVICES

CLORTEC

2660 COLUMBIA STREET, CALIFORNIA 90503

TELEPHONE No: (310) 618-9700
FAX No: (310) 618-9339
E-MAIL:
WEB SITE: www.severntrentservices.com

UNLESS OTHERWISE NOTED

NOTICE OF CONFIDENTIALITY

THIS DOCUMENT CONTAINS PROPRIETARY INFORMATION THAT IS AND SHALL REMAIN THE PROPERTY OF CLORTEC AND IS TO BE RETURNED IMMEDIATELY UPON REQUEST. ITS CONTENTS MAY NOT BE REPRODUCED, DISTRIBUTED, CIRCULATED, OR DISCLOSED TO THIRD PARTIES. RECIPIENT WILL NOT USE THIS INFORMATION FOR PURPOSES OTHER THAN INTENDED WITHOUT PRIOR WRITTEN CONSENT OF CLORTEC.

ISR ENCLOSURE
INTRINSIC BOX
2 DIGITAL INPUT
P/N: 5094STD

SCALE:	CLORTEC JOB No:	SIZE:	REV:
NTS	STANDARD	B	1

DWG No:	SHEET:
5094STD-100-J500A.DWG	1 OF 1

REV	DATE	DESCRIPTION	DRAWN BY	CHECKED BY	APPROVED BY
1	4/7/06	ISSUED FOR APPROVAL	JC		

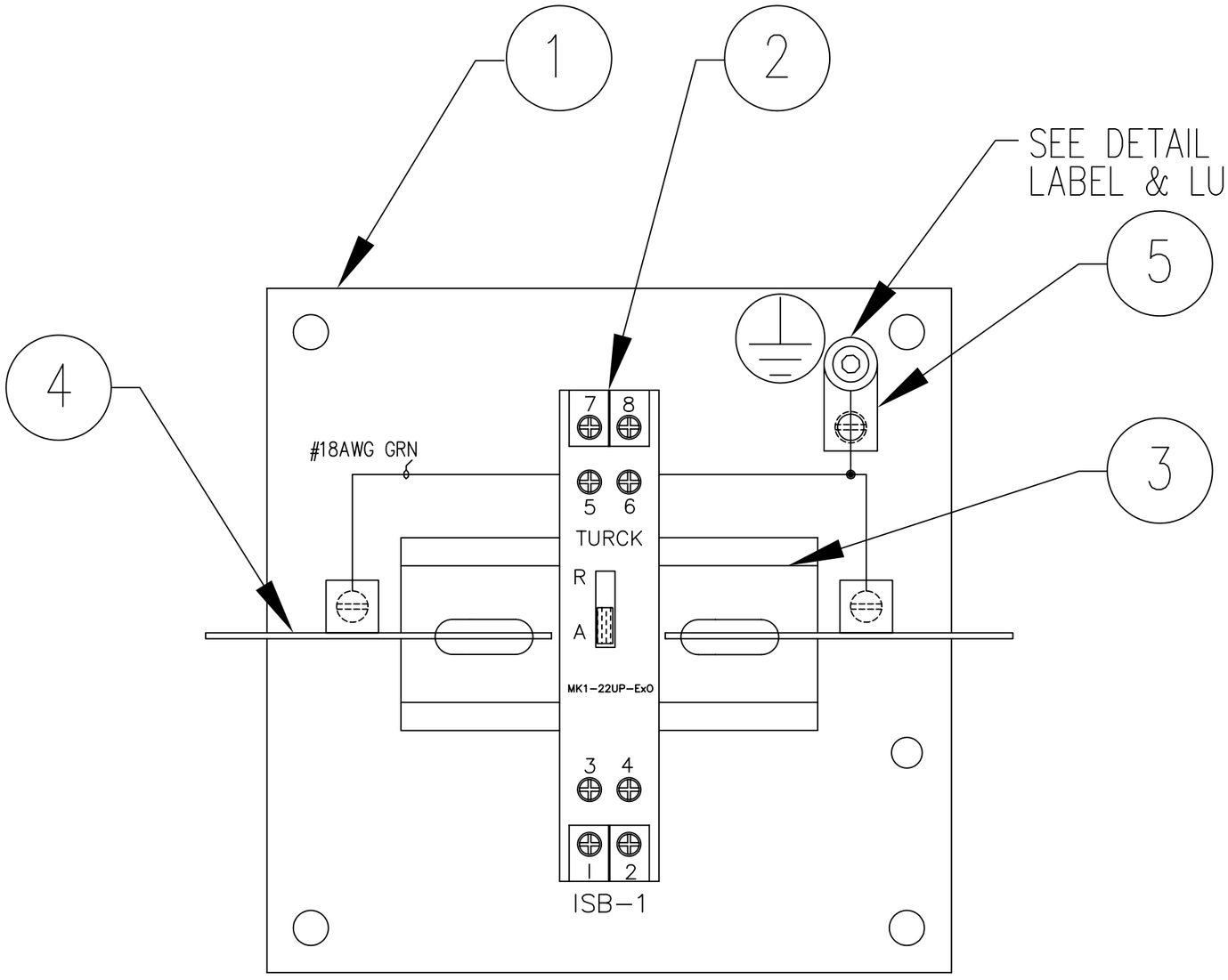

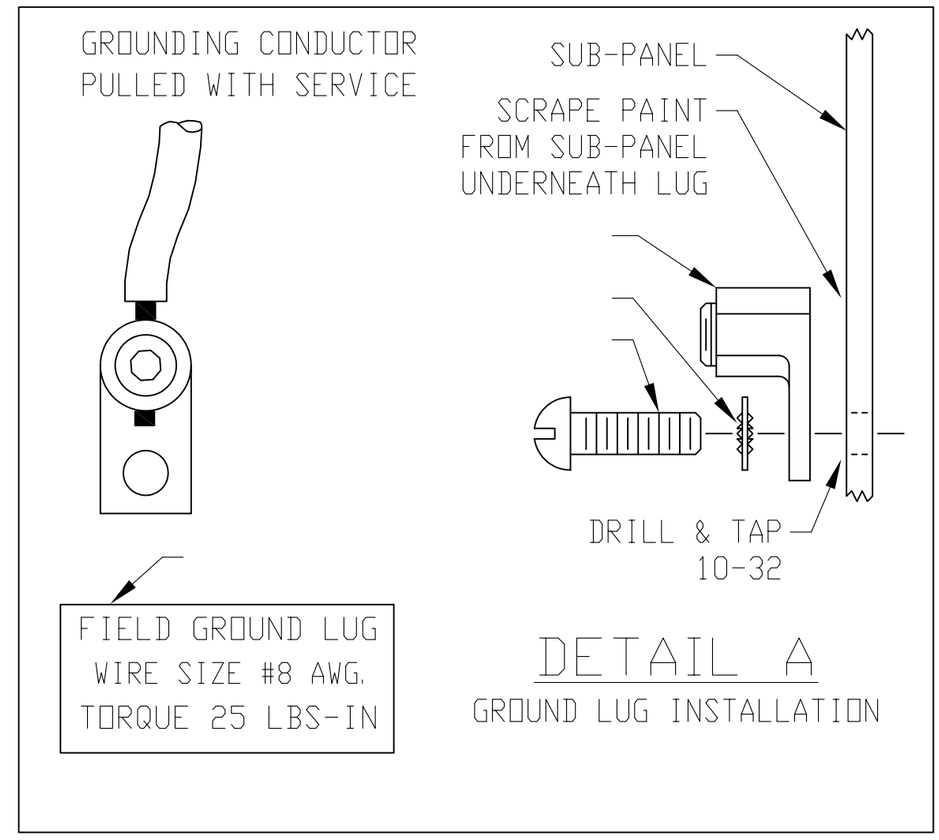

A-6P6

SEVERN TRENT SERVICES
CLORTEC
2660 COLUMBIA STREET, CALIFORNIA 90503
TELEPHONE No: (310) 618-9700
FAX No: (310) 618-9339
E-MAIL:
WEB SITE: www.severntrentservices.com

UNLESS OTHERWISE NOTED

NOTICE OF CONFIDENTIALITY

THIS DOCUMENT CONTAINS PROPRIETARY INFORMATION THAT IS AND SHALL REMAIN THE PROPERTY OF CLORTEC AND IS TO BE RETURNED IMMEDIATELY UPON REQUEST. ITS CONTENTS MAY NOT BE REPRODUCED, DISTRIBUTED, CIRCULATED, OR DISCLOSED TO THIRD PARTIES. RECIPIENT WILL NOT USE THIS INFORMATION FOR PURPOSES OTHER THAN INTENDED WITHOUT PRIOR WRITTEN CONSENT OF CLORTEC.

PANEL LAYOUT, ISR
INTRINSIC BOX
2 DIGITAL INPUT
P/N: 5094STD

SCALE:	CLORTEC JOB No:	SIZE:	REV:
NTS	STANDARD	B	1
DWG No: 5094STD-150-J500A.DWG		SHEET: 1 OF 1	

REV	DATE	DESCRIPTION	DRAWN BY	CHECKED BY	APPROVED BY
1	1/18/06	ISSUED FOR APPROVAL	JC		

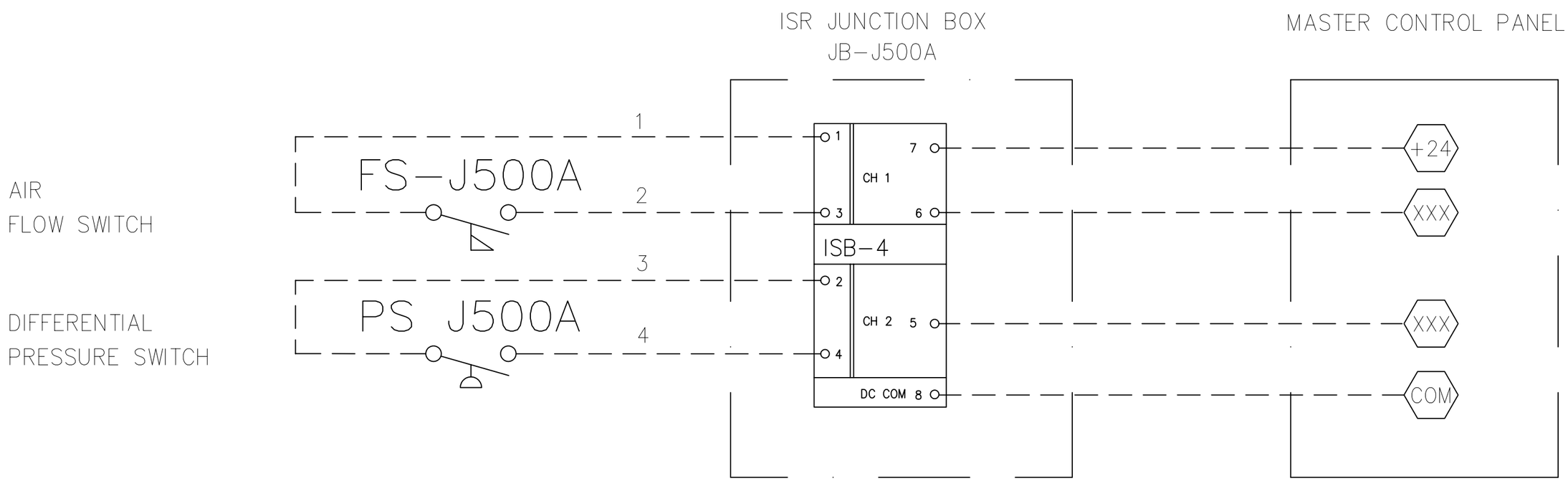

SEVERN TRENT SERVICES **CLORTEC**

2660 COLUMBIA STREET, CALIFORNIA 90503
TELEPHONE No: (310) 618-9700 E-MAIL:
FAX No: (310) 618-9339 WEB SITE: www.severntrentservices.com

UNLESS OTHERWISE NOTED

NOTICE OF CONFIDENTIALITY

THIS DOCUMENT CONTAINS PROPRIETARY INFORMATION THAT IS AND SHALL REMAIN THE PROPERTY OF CLORTEC AND IS TO BE RETURNED IMMEDIATELY UPON REQUEST. ITS CONTENTS MAY NOT BE REPRODUCED, DISTRIBUTED, CIRCULATED, OR DISCLOSED TO THIRD PARTIES. RECIPIENT WILL NOT USE THIS INFORMATION FOR PURPOSES OTHER THAN INTENDED WITHOUT PRIOR WRITTEN CONSENT OF CLORTEC.

SCHEMATIC
INTRINSICALLY SAFE RELAY BOX
2 DIGITAL INPUT
P/N: 5094STD

SCALE:	CLORTEC JOB No:	SIZE:	REV:
NTS	STANDARD	B	1
DWG No: 5094STD-500-J500A.DWG		SHEET: 1 OF 1	

DWG# : 5094STD-150-J500A
REV : 1
DATE: 1/18/06
ORIGINATOR: JC

TITLE: 2 DIGITAL INPUT,
INTRINSIC BOX

P/N: 5094STD

N/A#

ITEM	REF	DESCRIPTION	MFR	MFR P/N	CLORTEC P/N	QTY
1	PAN	MOUNTING PAN 6x6	HOFFMAN	A-6P6	5600-664	1
2	ISB-1	INTRINSIC SAFETY BARRIER, DUAL, 24VDC	TURCK	MK122UPEX0/24VDC	5500-425	1
3	MISC	DIN RAIL, SLOTTED	ALLEN-BRADLEY	199-DR1	2102-200	1
4	PRT	PARTICIAN, INTRINSIC, 1 BARRIER	CLORTEC	CLORTEC	5600-957	1
5	GND	LUG, BARREL POST, ONE HOLE, STRAIGHT TONGUE, #8STR	PANDUIT	ML8-C	5600-956	1

DWG# : 5094STD-100-J500A
REV : 1
DATE: 1/18/06
ORIGINATOR: JC

TITLE: 2 DIGITAL INPUT,
INTRINSIC BOX

P/N: 5094STD

N/A#

ITEM	REF	DESCRIPTION	MFR	MFR P/N	CLORTEC P/N	QTY
1	ENC	ENCLOSURE, PAINTED STEEL, NEMA 4, 6"x6"x4"	HOFFMAN	A-606CHNF	5600-663	1

REV	DATE	DESCRIPTION	DRAWN BY	CHECKED BY	APPROVED BY
1	1/18/06	ISSUED FOR APPROVAL	JC		

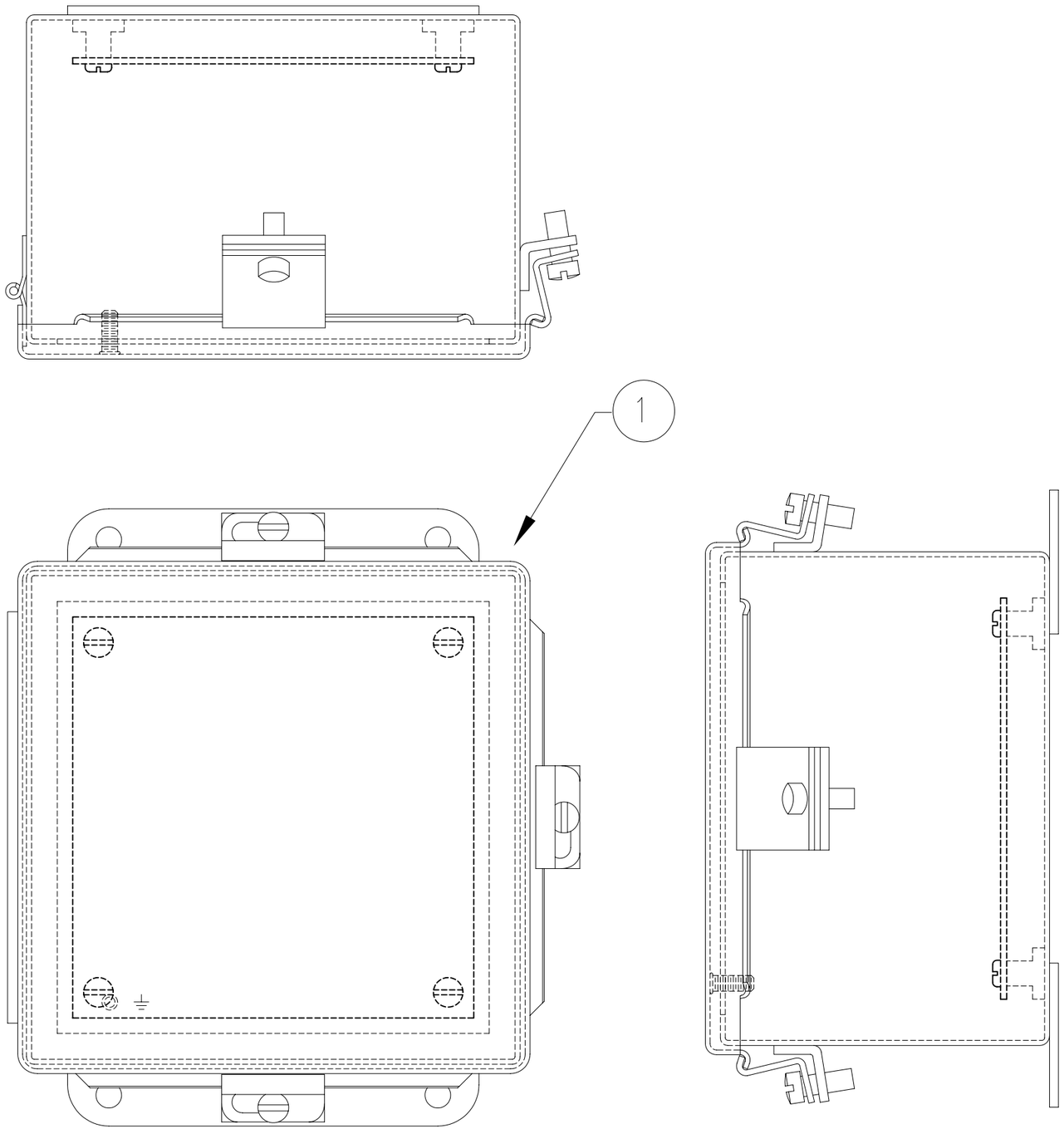

A-606CHNF

SEVERN TRENT SERVICES

CLORTEC

2660 COLUMBIA STREET, CALIFORNIA 90503

TELEPHONE No: (310) 618-9700
FAX No: (310) 618-9339
E-MAIL:
WEB SITE: www.severntrentservices.com

UNLESS OTHERWISE NOTED

NOTICE OF CONFIDENTIALITY

THIS DOCUMENT CONTAINS PROPRIETARY INFORMATION THAT IS AND SHALL REMAIN THE PROPERTY OF CLORTEC AND IS TO BE RETURNED IMMEDIATELY UPON REQUEST. ITS CONTENTS MAY NOT BE REPRODUCED, DISTRIBUTED, CIRCULATED, OR DISCLOSED TO THIRD PARTIES. RECIPIENT WILL NOT USE THIS INFORMATION FOR PURPOSES OTHER THAN INTENDED WITHOUT PRIOR WRITTEN CONSENT OF CLORTEC.

ISR ENCLOSURE
INTRINSIC BOX
2 DIGITAL INPUT
P/N: 5094STD

SCALE:	CLORTEC JOB No:	SIZE:	REV:
NTS	STANDARD	B	1

DWG No: 5094STD-100-J520A.DWG

SHEET: 1 OF 1

REV	DATE	DESCRIPTION	DRAWN BY	CHECKED BY	APPROVED BY
1	4/7/06	ISSUED FOR APPROVAL	JC		

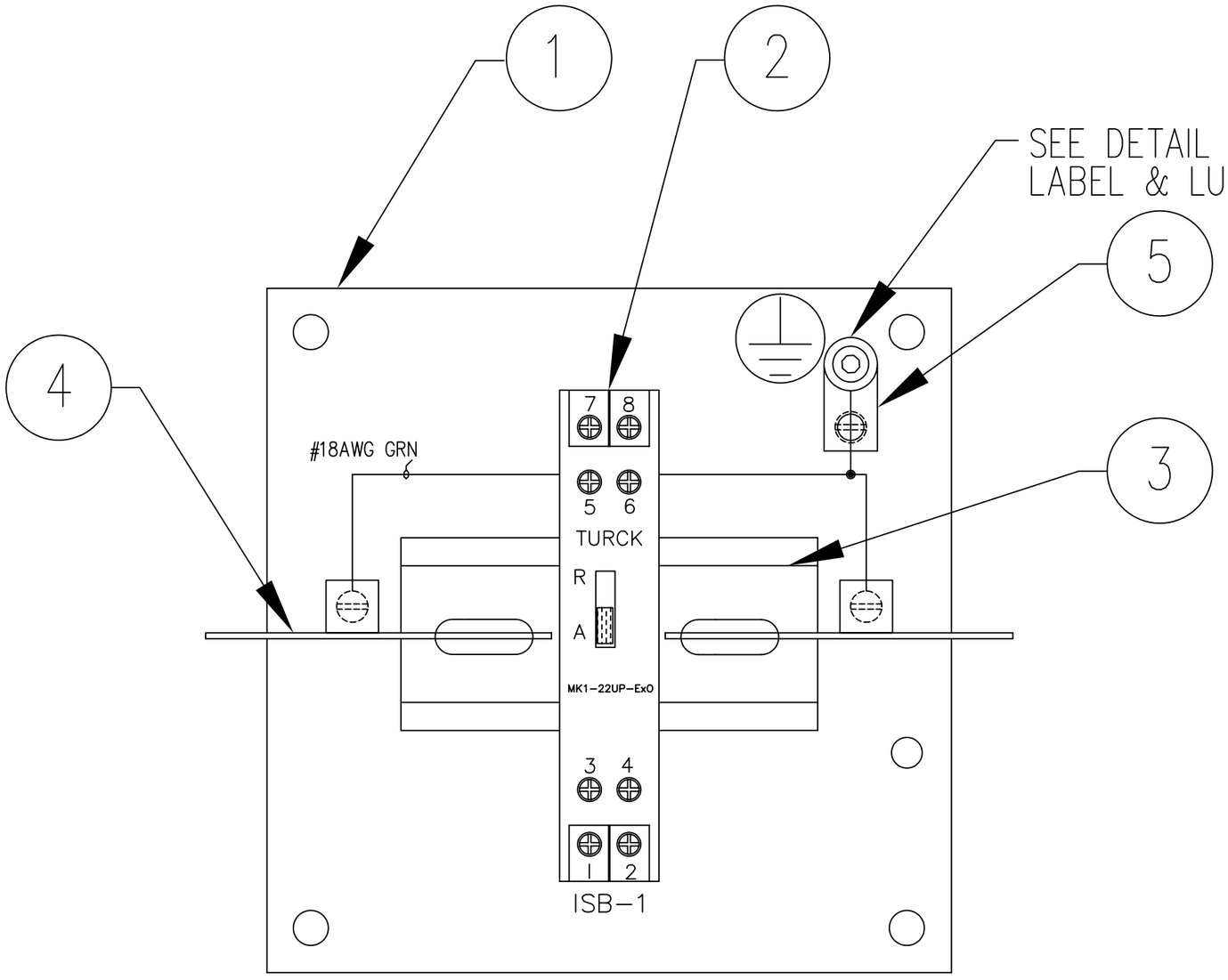

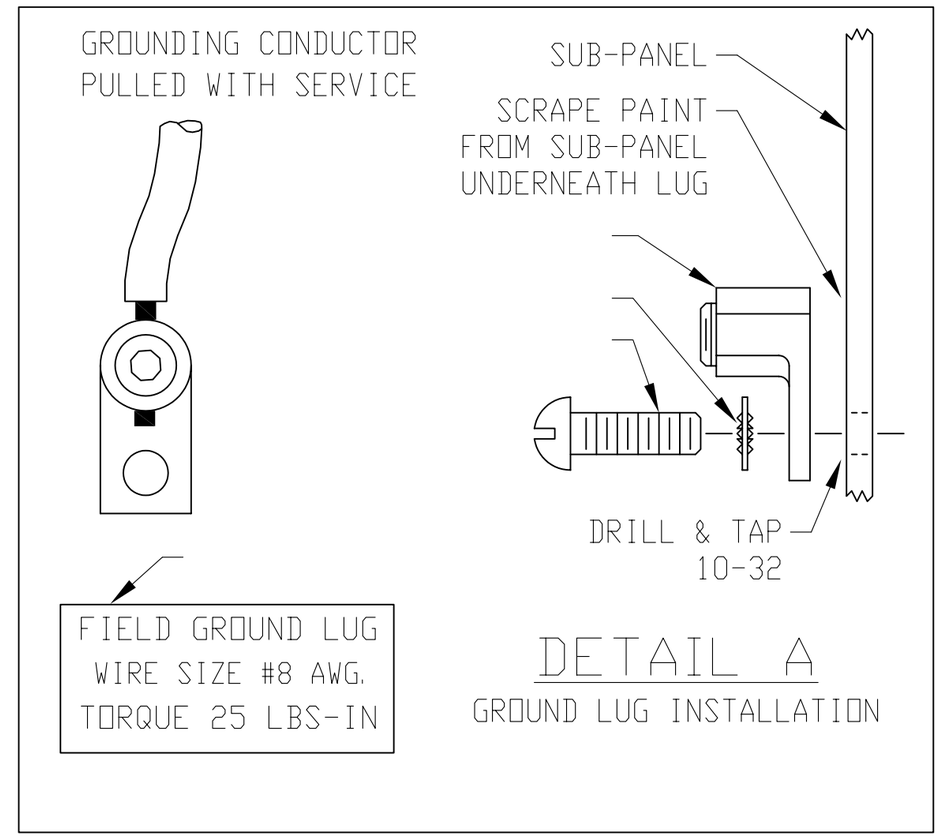

A-6P6

SEVERN TRENT SERVICES
CLORTEC
2660 COLUMBIA STREET, CALIFORNIA 90503
TELEPHONE No: (310) 618-9700
FAX No: (310) 618-9339
E-MAIL:
WEB SITE: www.severntrentservices.com

UNLESS OTHERWISE NOTED

NOTICE OF CONFIDENTIALITY

THIS DOCUMENT CONTAINS PROPRIETARY INFORMATION THAT IS AND SHALL REMAIN THE PROPERTY OF CLORTEC AND IS TO BE RETURNED IMMEDIATELY UPON REQUEST. ITS CONTENTS MAY NOT BE REPRODUCED, DISTRIBUTED, CIRCULATED, OR DISCLOSED TO THIRD PARTIES. RECIPIENT WILL NOT USE THIS INFORMATION FOR PURPOSES OTHER THAN INTENDED WITHOUT PRIOR WRITTEN CONSENT OF CLORTEC.

PANEL LAYOUT, ISR
INTRINSIC BOX
2 DIGITAL INPUT
P/N: 5094STD

SCALE:	CLORTEC JOB No:	SIZE:	REV:
NTS	STANDARD	B	1

DWG No:	SHEET:
5094STD-150-J520A.DWG	1 OF 1

REV	DATE	DESCRIPTION	DRAWN BY	CHECKED BY	APPROVED BY
1	1/18/06	ISSUED FOR APPROVAL	JC		

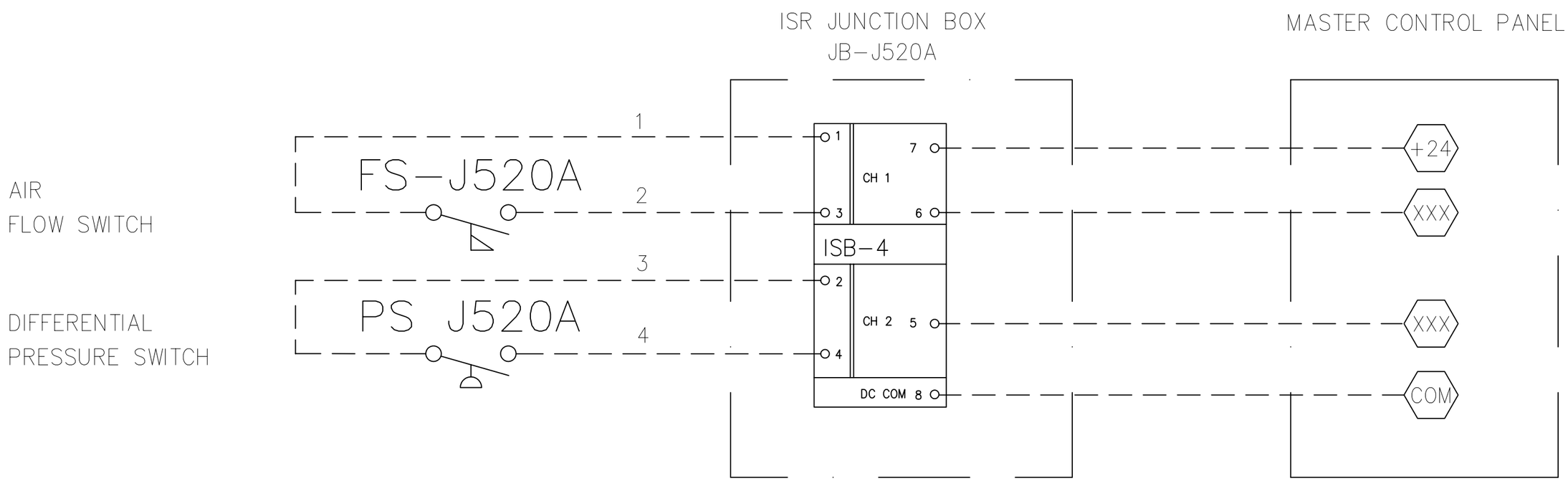

SEVERN TRENT SERVICES **CLORTEC**

2660 COLUMBIA STREET, CALIFORNIA 90503
TELEPHONE No: (310) 618-9700 E-MAIL:
FAX No: (310) 618-9339 WEB SITE: www.severntrentservices.com

UNLESS OTHERWISE NOTED

NOTICE OF CONFIDENTIALITY

THIS DOCUMENT CONTAINS PROPRIETARY INFORMATION THAT IS AND SHALL REMAIN THE PROPERTY OF CLORTEC AND IS TO BE RETURNED IMMEDIATELY UPON REQUEST. ITS CONTENTS MAY NOT BE REPRODUCED, DISTRIBUTED, CIRCULATED, OR DISCLOSED TO THIRD PARTIES. RECIPIENT WILL NOT USE THIS INFORMATION FOR PURPOSES OTHER THAN INTENDED WITHOUT PRIOR WRITTEN CONSENT OF CLORTEC.

SCHEMATIC
INTRINSICALLY SAFE RELAY BOX
2 DIGITAL INPUT
P/N: 5094STD

SCALE:	CLORTEC JOB No:	SIZE:	REV:
NTS	STANDARD	B	1
DWG No: 5094STD-500-J520A.DWG		SHEET: 1 OF 1	

DWG# : 5094STD-100-J520A
REV : 1
DATE: 1/18/06
ORIGINATOR: JC

TITLE: 2 DIGITAL INPUT,
INTRINSIC BOX

P/N: 5094STD

N/A#

ITEM	REF	DESCRIPTION	MFR	MFR P/N	CLORTEC P/N	QTY
1	ENC	ENCLOSURE, PAINTED STEEL, NEMA 4, 6"x6"x4"	HOFFMAN	A-606CHNF	5600-663	1

DWG# : 5094STD-150-J500A
REV : 1
DATE: 1/18/06
ORIGINATOR: JC

TITLE: 2 DIGITAL INPUT,
INTRINSIC BOX

P/N: 5094STD

N/A#

ITEM	REF	DESCRIPTION	MFR	MFR P/N	CLORTEC P/N	QTY
1	PAN	MOUNTING PAN 6x6	HOFFMAN	A-6P6	5600-664	1
2	ISB-1	INTRINSIC SAFETY BARRIER, DUAL, 24VDC	TURCK	MK122UPEX0/24VDC	5500-425	1
3	MISC	DIN RAIL, SLOTTED	ALLEN-BRADLEY	199-DR1	2102-200	1
4	PRT	PARTICIAN, INTRINSIC, 1 BARRIER	CLORTEC	CLORTEC	5600-957	1
5	GND	LUG, BARREL POST, ONE HOLE, STRAIGHT TONGUE, #8STR	PANDUIT	ML8-C	5600-956	1

REV	DATE	DESCRIPTION	DRAWN BY	CHECKED BY	APPROVED BY
1	1/18/06	ISSUED FOR APPROVAL	JC		

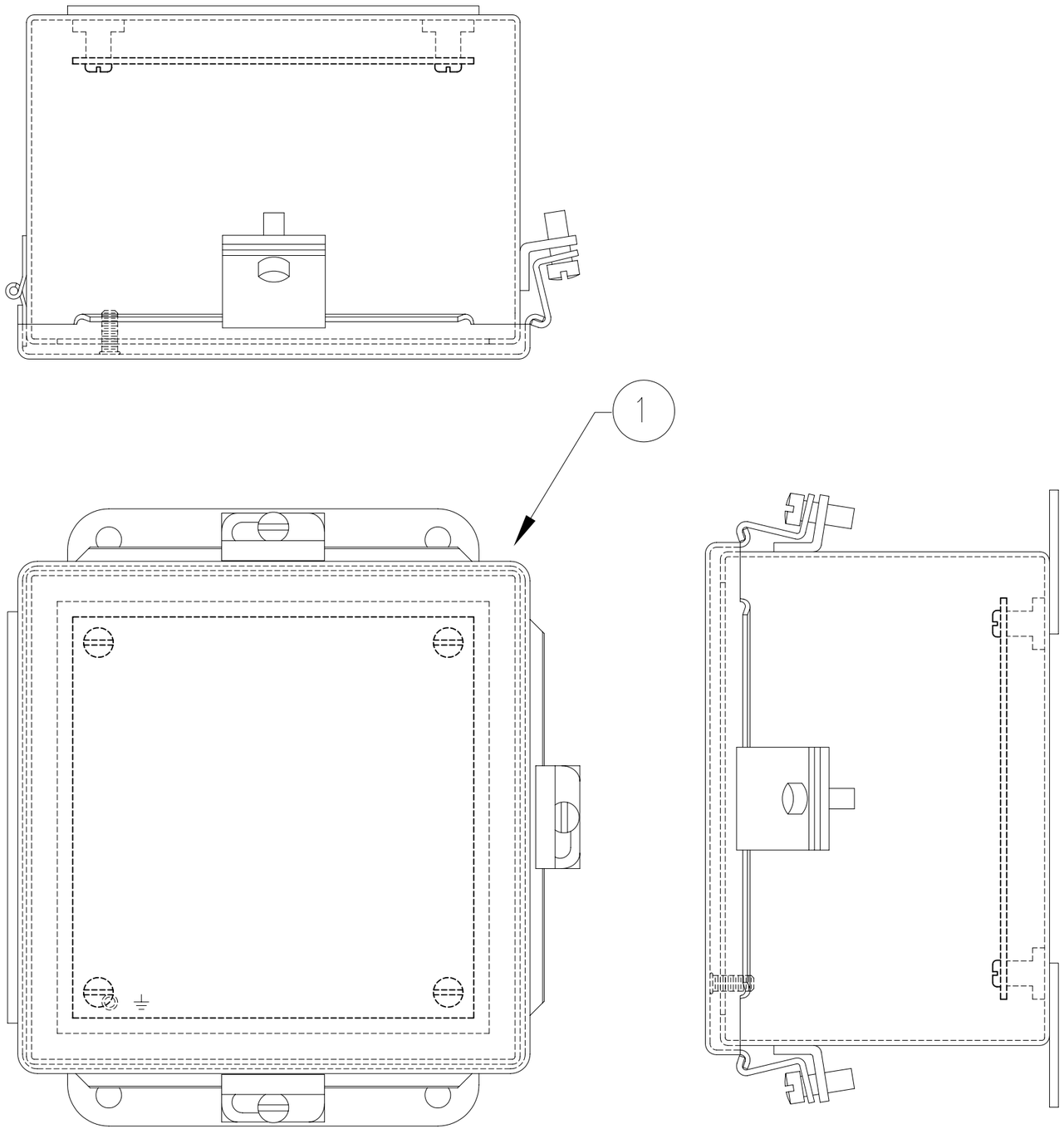

A-606CHNF

SEVERN TRENT SERVICES

CLORTEC

2660 COLUMBIA STREET, CALIFORNIA 90503

TELEPHONE No: (310) 618-9700
FAX No: (310) 618-9339
E-MAIL:
WEB SITE: www.severntrentservices.com

UNLESS OTHERWISE NOTED

NOTICE OF CONFIDENTIALITY

THIS DOCUMENT CONTAINS PROPRIETARY INFORMATION THAT IS AND SHALL REMAIN THE PROPERTY OF CLORTEC AND IS TO BE RETURNED IMMEDIATELY UPON REQUEST. ITS CONTENTS MAY NOT BE REPRODUCED, DISTRIBUTED, CIRCULATED, OR DISCLOSED TO THIRD PARTIES. RECIPIENT WILL NOT USE THIS INFORMATION FOR PURPOSES OTHER THAN INTENDED WITHOUT PRIOR WRITTEN CONSENT OF CLORTEC.

ISR ENCLOSURE
INTRINSIC BOX
2 DIGITAL INPUT
P/N: 5094STD

SCALE:	CLORTEC JOB No:	SIZE:	REV:
NTS	STANDARD	B	1

DWG No:	SHEET:
5094STD-100-J540A.DWG	1 OF 1

REV	DATE	DESCRIPTION	DRAWN BY	CHECKED BY	APPROVED BY
1	4/7/06	ISSUED FOR APPROVAL	JC		

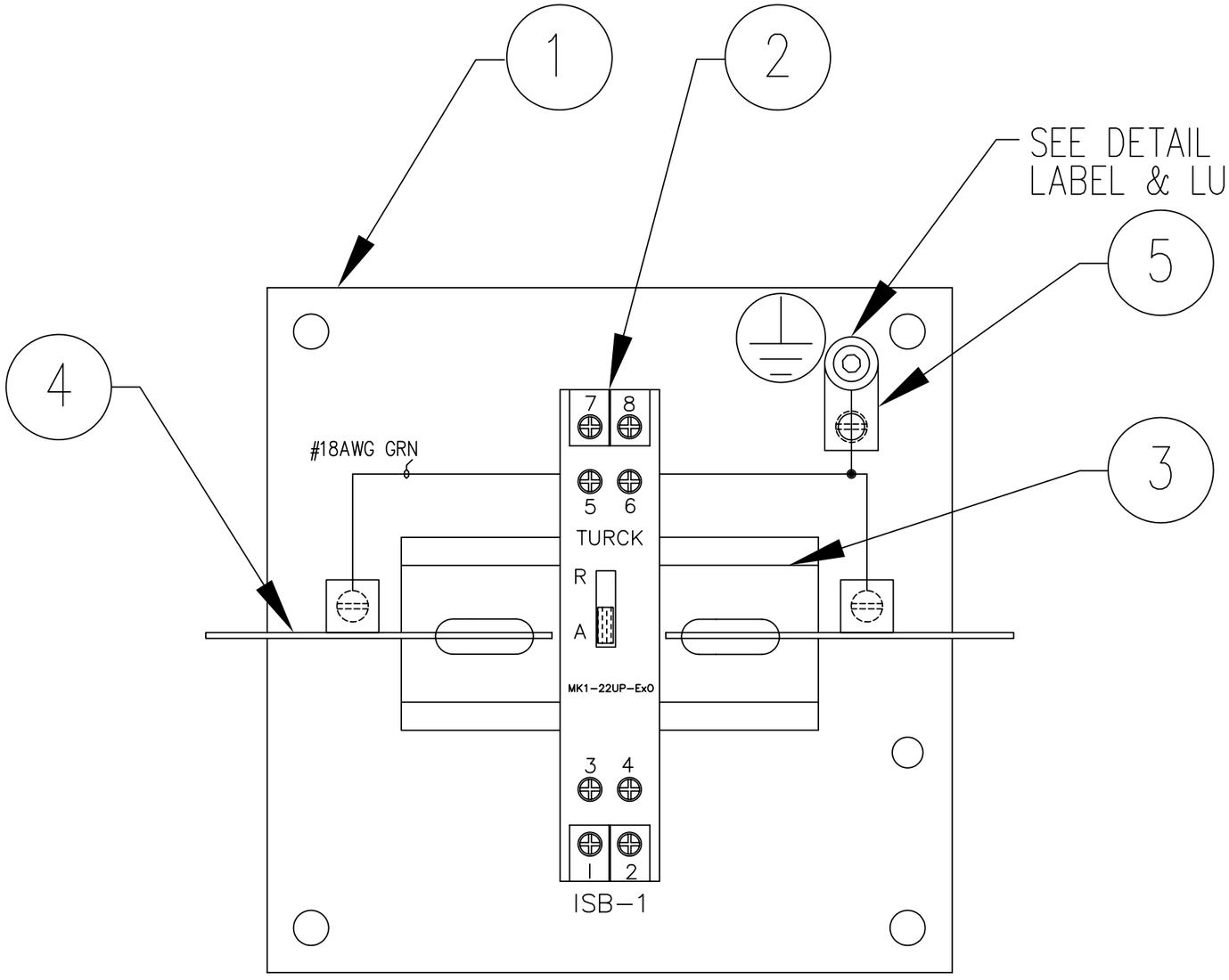

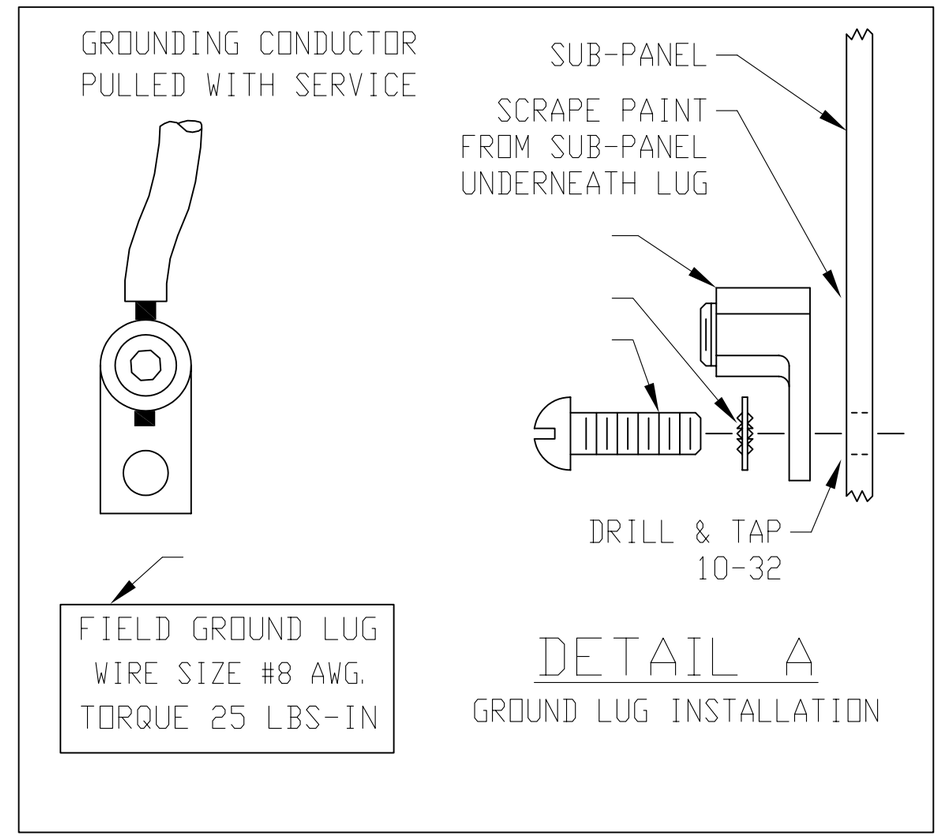

A-6P6

SEVERN TRENT SERVICES
CLORTEC
2660 COLUMBIA STREET, CALIFORNIA 90503
TELEPHONE No: (310) 618-9700
FAX No: (310) 618-9339
E-MAIL:
WEB SITE: www.severntrentservices.com

UNLESS OTHERWISE NOTED

NOTICE OF CONFIDENTIALITY

THIS DOCUMENT CONTAINS PROPRIETARY INFORMATION THAT IS AND SHALL REMAIN THE PROPERTY OF CLORTEC AND IS TO BE RETURNED IMMEDIATELY UPON REQUEST. ITS CONTENTS MAY NOT BE REPRODUCED, DISTRIBUTED, CIRCULATED, OR DISCLOSED TO THIRD PARTIES. RECIPIENT WILL NOT USE THIS INFORMATION FOR PURPOSES OTHER THAN INTENDED WITHOUT PRIOR WRITTEN CONSENT OF CLORTEC.

PANEL LAYOUT, ISR
INTRINSIC BOX
2 DIGITAL INPUT
P/N: 5094STD

SCALE:	CLORTEC JOB No:	SIZE:	REV:
NTS	STANDARD	B	1
DWG No: 5094STD-150-J540A.DWG		SHEET: 1 OF 1	

REV	DATE	DESCRIPTION	DRAWN BY	CHECKED BY	APPROVED BY
1	1/18/06	ISSUED FOR APPROVAL	JC		

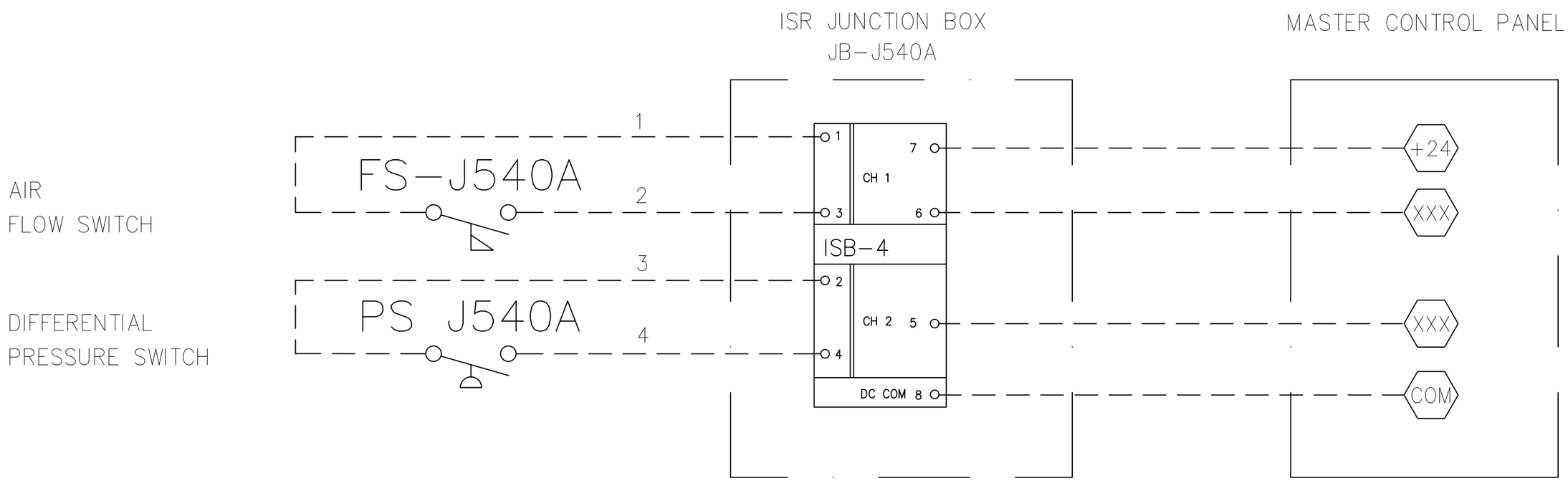

SEVERN TRENT SERVICES

CLORTEC

2660 COLUMBIA STREET, CALIFORNIA 90503

TELEPHONE No: (310) 618-9700 E-MAIL:
FAX No: (310) 618-9339 WEB SITE: www.severntrentservices.com

UNLESS OTHERWISE NOTED

NOTICE OF CONFIDENTIALITY

THIS DOCUMENT CONTAINS PROPRIETARY INFORMATION THAT IS AND SHALL REMAIN THE PROPERTY OF CLORTEC AND IS TO BE RETURNED IMMEDIATELY UPON REQUEST. ITS CONTENTS MAY NOT BE REPRODUCED, DISTRIBUTED, CIRCULATED, OR DISCLOSED TO THIRD PARTIES. RECIPIENT WILL NOT USE THIS INFORMATION FOR PURPOSES OTHER THAN INTENDED WITHOUT PRIOR WRITTEN CONSENT OF CLORTEC.

SCHEMATIC
INTRINSICALLY SAFE RELAY BOX
2 DIGITAL INPUT
P/N: 5094STD

SCALE:	CLORTEC JOB No:	SIZE:	REV:
NTS	STANDARD	B	1
DWG No: 5094STD-500-J540A.DWG		SHEET: 1 OF 1	

DWG# : 5094STD-100-J540A
REV : 1
DATE: 1/18/06
ORIGINATOR: JC

TITLE: 2 DIGITAL INPUT,
INTRINSIC BOX

P/N: 5094STD

N/A#

ITEM	REF	DESCRIPTION	MFR	MFR P/N	CLORTEC P/N	QTY
1	ENC	ENCLOSURE, PAINTED STEEL, NEMA 4, 6"x6"x4"	HOFFMAN	A-606CHNF	5600-663	1

DWG# : 5094STD-150-J540A
REV : 1
DATE: 1/18/06
ORIGINATOR: JC

TITLE: 2 DIGITAL INPUT,
INTRINSIC BOX

P/N: 5094STD

N/A#

ITEM	REF	DESCRIPTION	MFR	MFR P/N	CLORTEC P/N	QTY
1	PAN	MOUNTING PAN 6x6	HOFFMAN	A-6P6	5600-664	1
2	ISB-1	INTRINSIC SAFETY BARRIER, DUAL, 24VDC	TURCK	MK122UPEX0/24VDC	5500-425	1
3	MISC	DIN RAIL, SLOTTED	ALLEN-BRADLEY	199-DR1	2102-200	1
4	PRT	PARTICIAN, INTRINSIC, 1 BARRIER	CLORTEC	CLORTEC	5600-957	1
5	GND	LUG, BARREL POST, ONE HOLE, STRAIGHT TONGUE, #8STR	PANDUIT	ML8-C	5600-956	1

REV	DATE	DESCRIPTION	DRAWN BY	CHECKED BY	APPROVED BY
1	1/18/06	ISSUED FOR APPROVAL	JC		

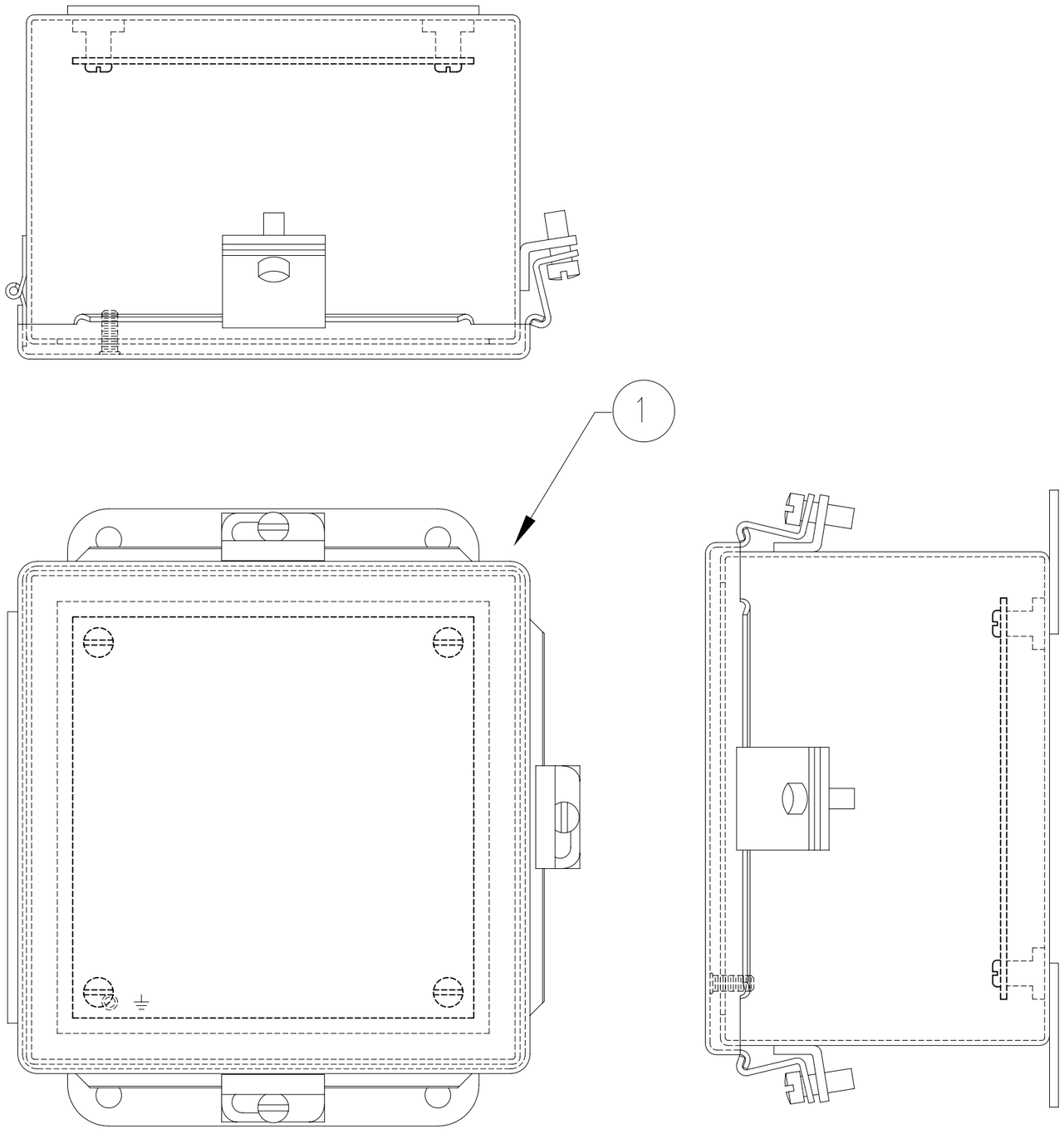

A-606CHNF

SEVERN TRENT SERVICES

CLORTEC

2660 COLUMBIA STREET, CALIFORNIA 90503

TELEPHONE No: (310) 618-9700
FAX No: (310) 618-9339
E-MAIL:
WEB SITE: www.severntrentservices.com

UNLESS OTHERWISE NOTED

NOTICE OF CONFIDENTIALITY

THIS DOCUMENT CONTAINS PROPRIETARY INFORMATION THAT IS AND SHALL REMAIN THE PROPERTY OF CLORTEC AND IS TO BE RETURNED IMMEDIATELY UPON REQUEST. ITS CONTENTS MAY NOT BE REPRODUCED, DISTRIBUTED, CIRCULATED, OR DISCLOSED TO THIRD PARTIES. RECIPIENT WILL NOT USE THIS INFORMATION FOR PURPOSES OTHER THAN INTENDED WITHOUT PRIOR WRITTEN CONSENT OF CLORTEC.

ISR ENCLOSURE
INTRINSIC BOX
2 DIGITAL INPUT
P/N: 5094STD

SCALE:	CLORTEC JOB No:	SIZE:	REV:
NTS	STANDARD	B	1

DWG No:	SHEET:
5094STD-100-J560A.DWG	1 OF 1

REV	DATE	DESCRIPTION	DRAWN BY	CHECKED BY	APPROVED BY
1	4/7/06	ISSUED FOR APPROVAL	JC		

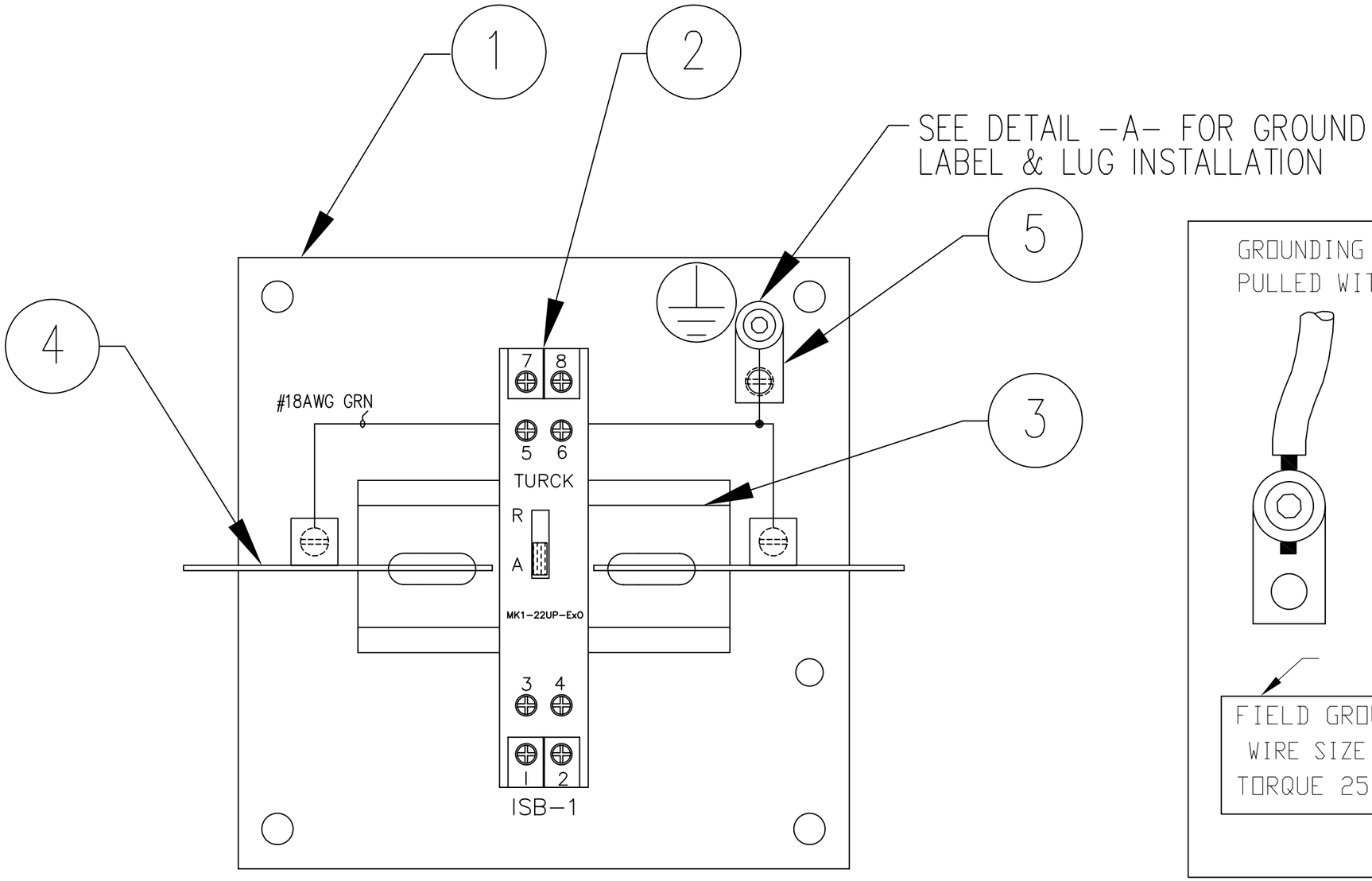

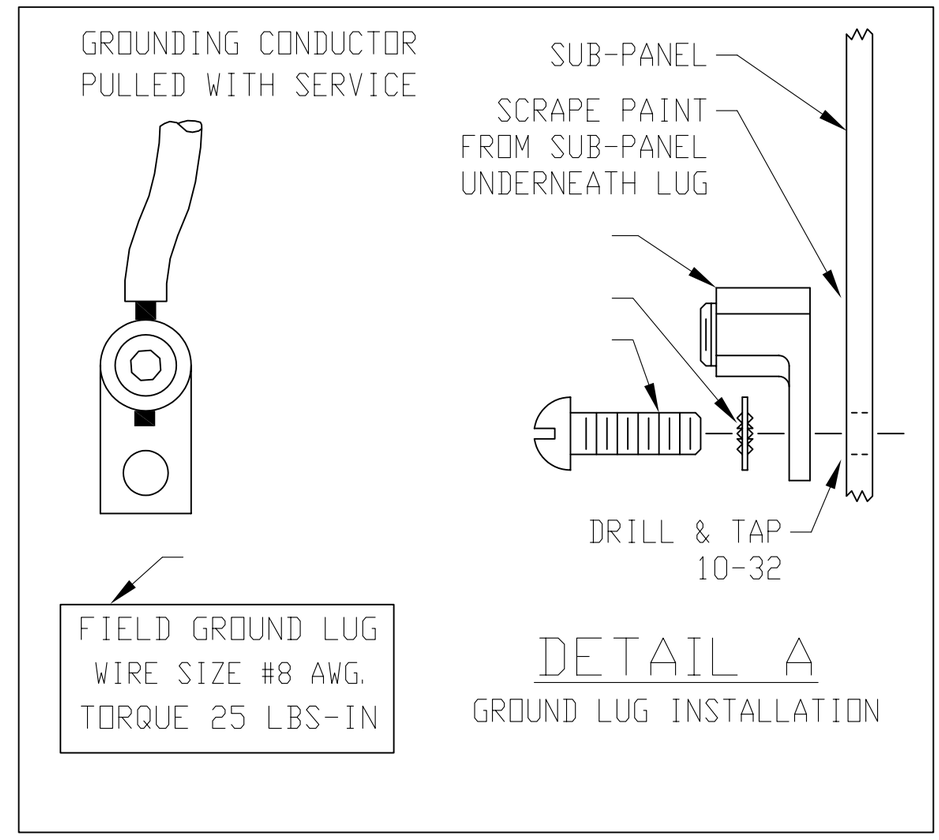

A-6P6

SEVERN TRENT SERVICES
CLORTEC
2660 COLUMBIA STREET, CALIFORNIA 90503
TELEPHONE No: (310) 618-9700
FAX No: (310) 618-9339
E-MAIL:
WEB SITE: www.severntrentservices.com

UNLESS OTHERWISE NOTED

NOTICE OF CONFIDENTIALITY
THIS DOCUMENT CONTAINS PROPRIETARY INFORMATION THAT IS AND SHALL REMAIN THE PROPERTY OF CLORTEC AND IS TO BE RETURNED IMMEDIATELY UPON REQUEST. ITS CONTENTS MAY NOT BE REPRODUCED, DISTRIBUTED, CIRCULATED, OR DISCLOSED TO THIRD PARTIES. RECIPIENT WILL NOT USE THIS INFORMATION FOR PURPOSES OTHER THAN INTENDED WITHOUT PRIOR WRITTEN CONSENT OF CLORTEC.

PANEL LAYOUT, ISR
INTRINSIC BOX
2 DIGITAL INPUT
P/N: 5094STD

SCALE:	CLORTEC JOB No:	SIZE:	REV:
NTS	STANDARD	B	1

DWG No:	SHEET:
5094STD-150-J560A.DWG	1 OF 1

REV	DATE	DESCRIPTION	DRAWN BY	CHECKED BY	APPROVED BY
1	1/18/06	ISSUED FOR APPROVAL	JC		

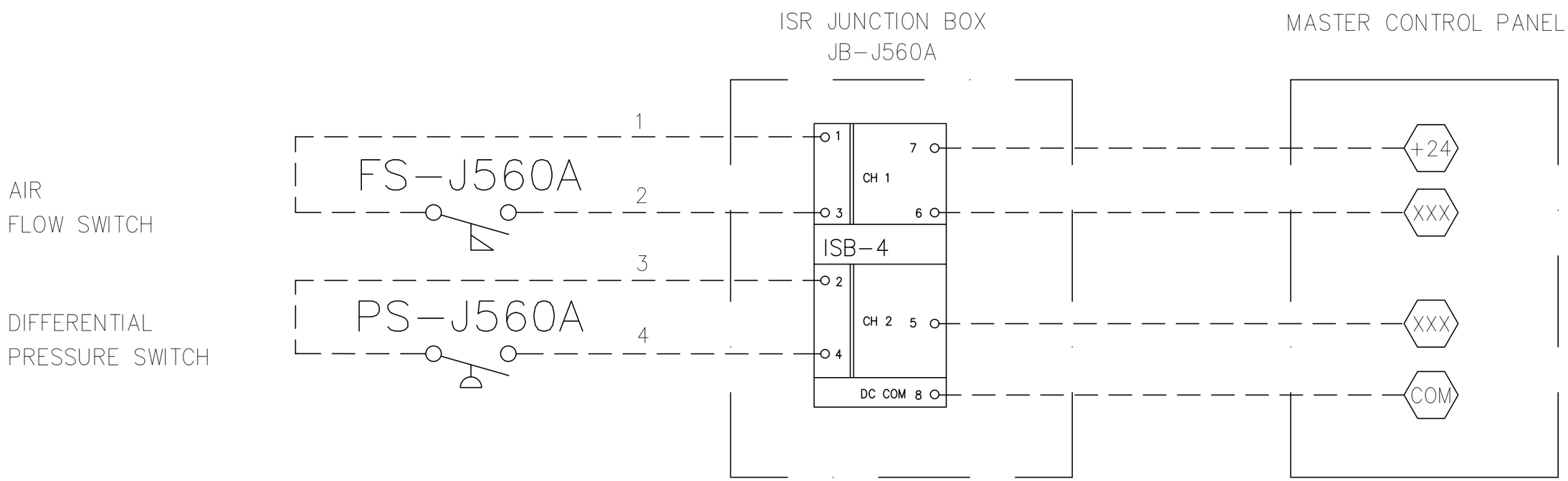

SEVERN TRENT SERVICES

CLORTEC

2660 COLUMBIA STREET, CALIFORNIA 90503

TELEPHONE No: (310) 618-9700 E-MAIL:
FAX No: (310) 618-9339 WEB SITE: www.severntrentservices.com

UNLESS OTHERWISE NOTED

NOTICE OF CONFIDENTIALITY

THIS DOCUMENT CONTAINS PROPRIETARY INFORMATION THAT IS AND SHALL REMAIN THE PROPERTY OF CLORTEC AND IS TO BE RETURNED IMMEDIATELY UPON REQUEST. ITS CONTENTS MAY NOT BE REPRODUCED, DISTRIBUTED, CIRCULATED, OR DISCLOSED TO THIRD PARTIES. RECIPIENT WILL NOT USE THIS INFORMATION FOR PURPOSES OTHER THAN INTENDED WITHOUT PRIOR WRITTEN CONSENT OF CLORTEC.

SCHEMATIC
INTRINSICALLY SAFE RELAY BOX
2 DIGITAL INPUT
P/N: 5094STD

SCALE:	CLORTEC JOB No:	SIZE:	REV:
NTS	STANDARD	B	1
DWG No: 5094STD-500-J560A.DWG		SHEET: 1 OF 1	

DWG# : 5094STD-100-J560A
REV : 1
DATE: 1/18/06
ORIGINATOR: JC

TITLE: 2 DIGITAL INPUT,
INTRINSIC BOX

P/N: 5094STD

N/A#

ITEM	REF	DESCRIPTION	MFR	MFR P/N	CLORTEC P/N	QTY
1	ENC	ENCLOSURE, PAINTED STEEL, NEMA 4, 6"x6"x4"	HOFFMAN	A-606CHNF	5600-663	1

DWG# : 5094STD-150-J560A
REV : 1
DATE: 1/18/06
ORIGINATOR: JC

TITLE: 2 DIGITAL INPUT,
INTRINSIC BOX

P/N: 5094STD

N/A#

ITEM	REF	DESCRIPTION	MFR	MFR P/N	CLORTEC P/N	QTY
1	PAN	MOUNTING PAN 6x6	HOFFMAN	A-6P6	5600-664	1
2	ISB-1	INTRINSIC SAFETY BARRIER, DUAL, 24VDC	TURCK	MK122UPEX0/24VDC	5500-425	1
3	MISC	DIN RAIL, SLOTTED	ALLEN-BRADLEY	199-DR1	2102-200	1
4	PRT	PARTICIAN, INTRINSIC, 1 BARRIER	CLORTEC	CLORTEC	5600-957	1
5	GND	LUG, BARREL POST, ONE HOLE, STRAIGHT TONGUE, #8STR	PANDUIT	ML8-C	5600-956	1

REV	DATE	DESCRIPTION	DRAWN BY	CHECKED BY	APPROVED BY
1	1/18/06	ISSUED FOR APPROVAL	JC		

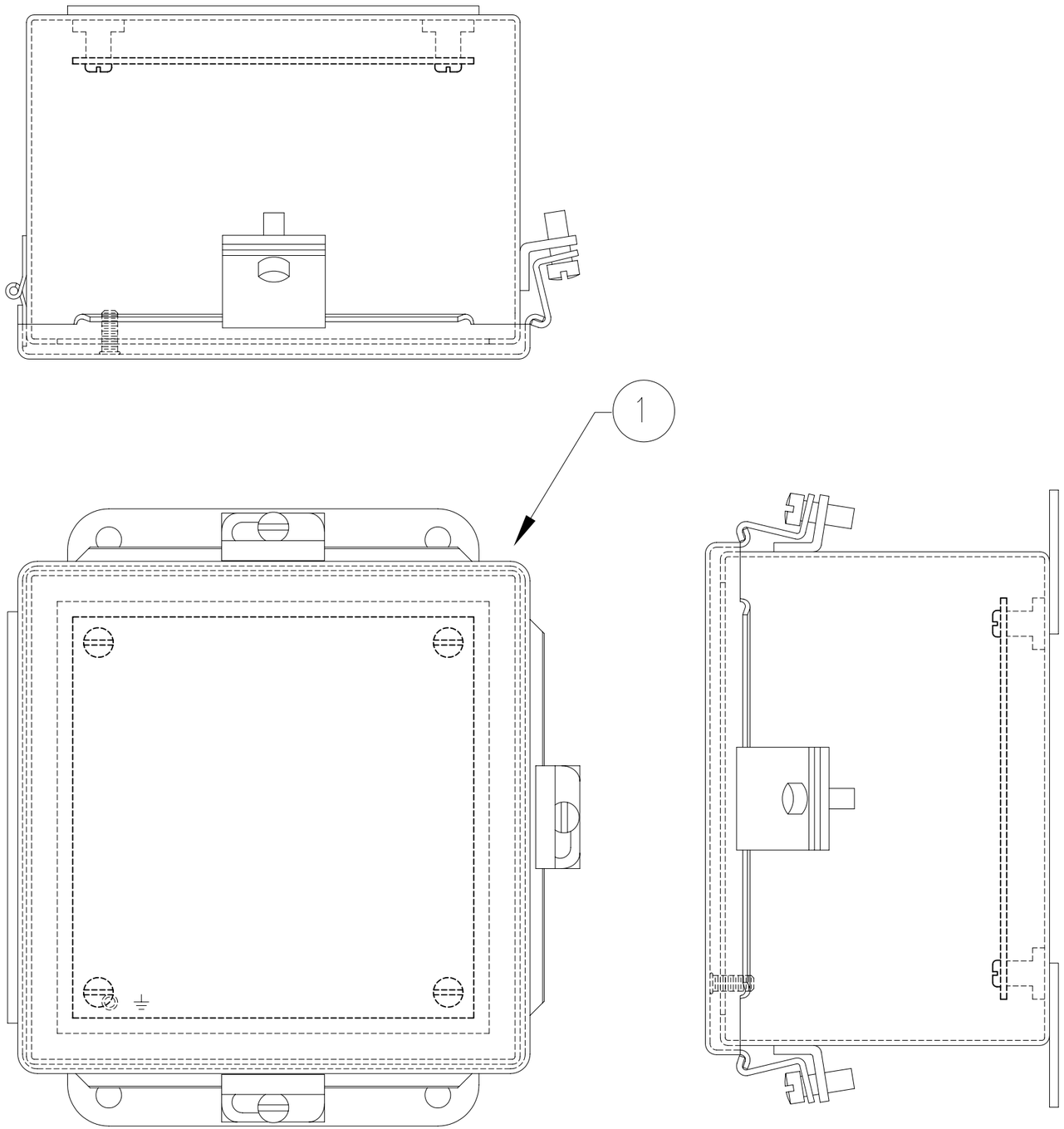

A-606CHNF

SEVERN TRENT SERVICES

CLORTEC

2660 COLUMBIA STREET, CALIFORNIA 90503

TELEPHONE No: (310) 618-9700
FAX No: (310) 618-9339
E-MAIL:
WEB SITE: www.severntrentservices.com

UNLESS OTHERWISE NOTED

NOTICE OF CONFIDENTIALITY

THIS DOCUMENT CONTAINS PROPRIETARY INFORMATION THAT IS AND SHALL REMAIN THE PROPERTY OF CLORTEC AND IS TO BE RETURNED IMMEDIATELY UPON REQUEST. ITS CONTENTS MAY NOT BE REPRODUCED, DISTRIBUTED, CIRCULATED, OR DISCLOSED TO THIRD PARTIES. RECIPIENT WILL NOT USE THIS INFORMATION FOR PURPOSES OTHER THAN INTENDED WITHOUT PRIOR WRITTEN CONSENT OF CLORTEC.

ISR ENCLOSURE
INTRINSIC BOX
5 DIGITAL INPUT
P/N: 5095STD

SCALE:	CLORTEC JOB No:	SIZE:	REV:
NTS	STANDARD	B	1
DWG No: 5095STD-100-J400A.DWG		SHEET: 1 OF 1	

REV	DATE	DESCRIPTION	DRAWN BY	CHECKED BY	APPROVED BY
1	4/7/06	ISSUED FOR APPROVAL	JC		

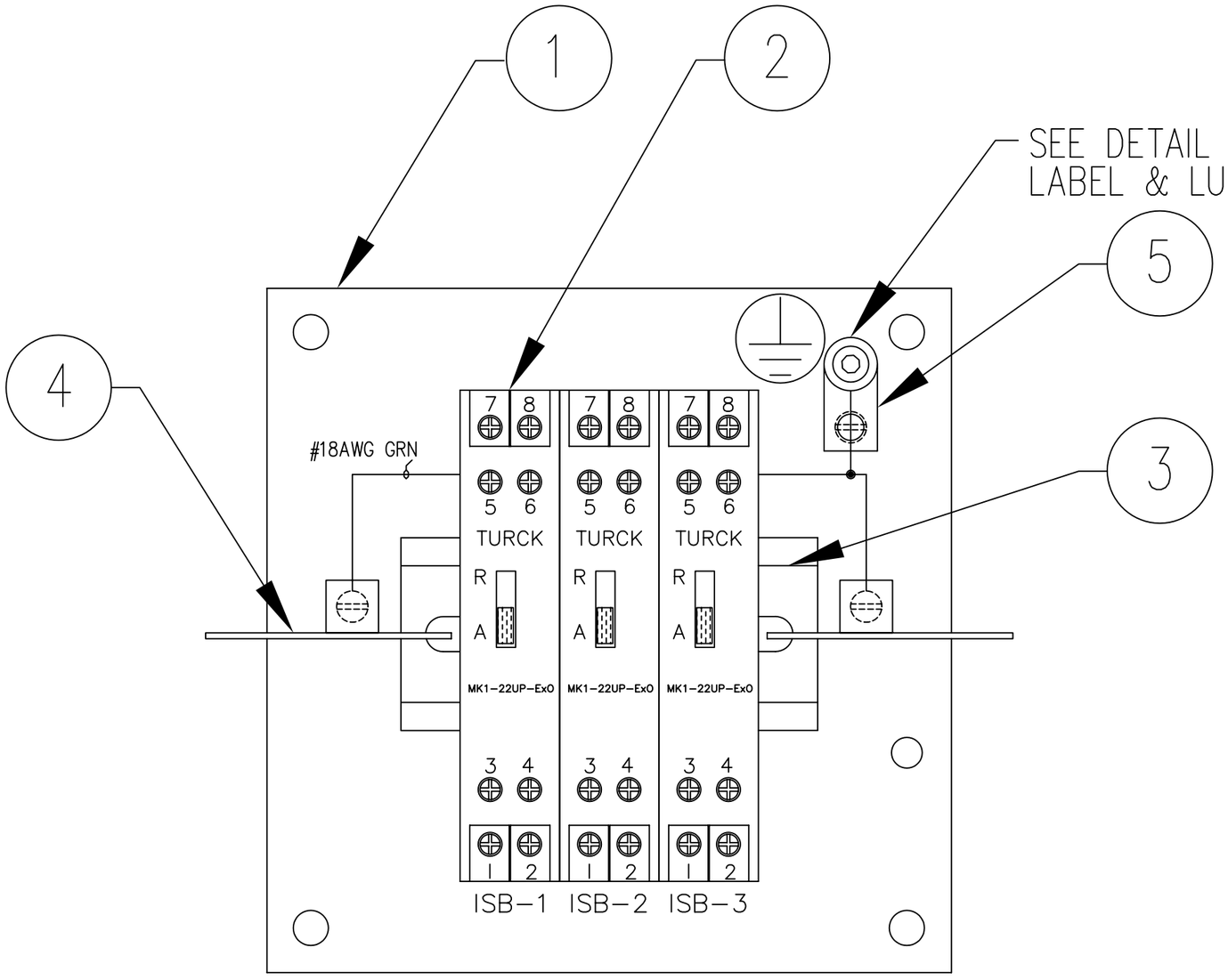

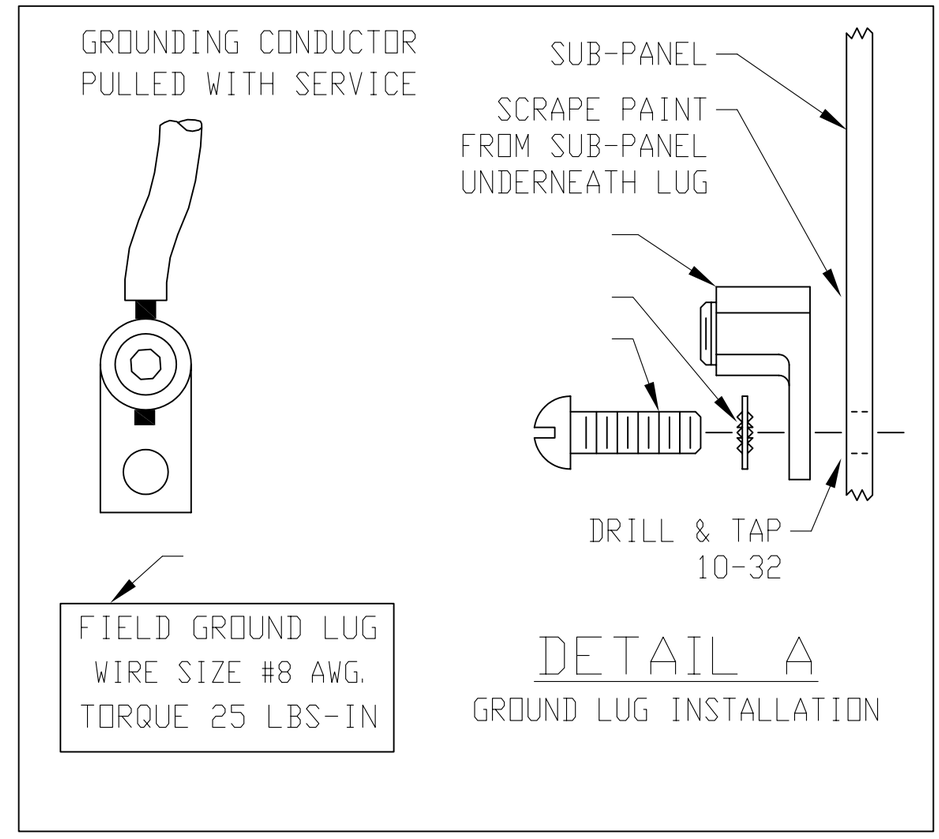

A-6P6

SEVERN TRENT SERVICES
CLORTEC
2660 COLUMBIA STREET, CALIFORNIA 90503
TELEPHONE No: (310) 618-9700
FAX No: (310) 618-9339
E-MAIL:
WEB SITE: www.severntrentservices.com

UNLESS OTHERWISE NOTED

NOTICE OF CONFIDENTIALITY

THIS DOCUMENT CONTAINS PROPRIETARY INFORMATION THAT IS AND SHALL REMAIN THE PROPERTY OF CLORTEC AND IS TO BE RETURNED IMMEDIATELY UPON REQUEST. ITS CONTENTS MAY NOT BE REPRODUCED, DISTRIBUTED, CIRCULATED, OR DISCLOSED TO THIRD PARTIES. RECIPIENT WILL NOT USE THIS INFORMATION FOR PURPOSES OTHER THAN INTENDED WITHOUT PRIOR WRITTEN CONSENT OF CLORTEC.

PANEL LAYOUT, ISR
INTRINSIC BOX
5 DIGITAL INPUT
P/N: 5095STD

SCALE:	CLORTEC JOB No:	SIZE:	REV:
NTS	STANDARD	B	1

DWG No: 5095STD-150-J400A.DWG

SHEET: 1 OF 1

REV	DATE	DESCRIPTION	DRAWN BY	CHECKED BY	APPROVED BY
1	1/18/06	ISSUED FOR APPROVAL	JC		

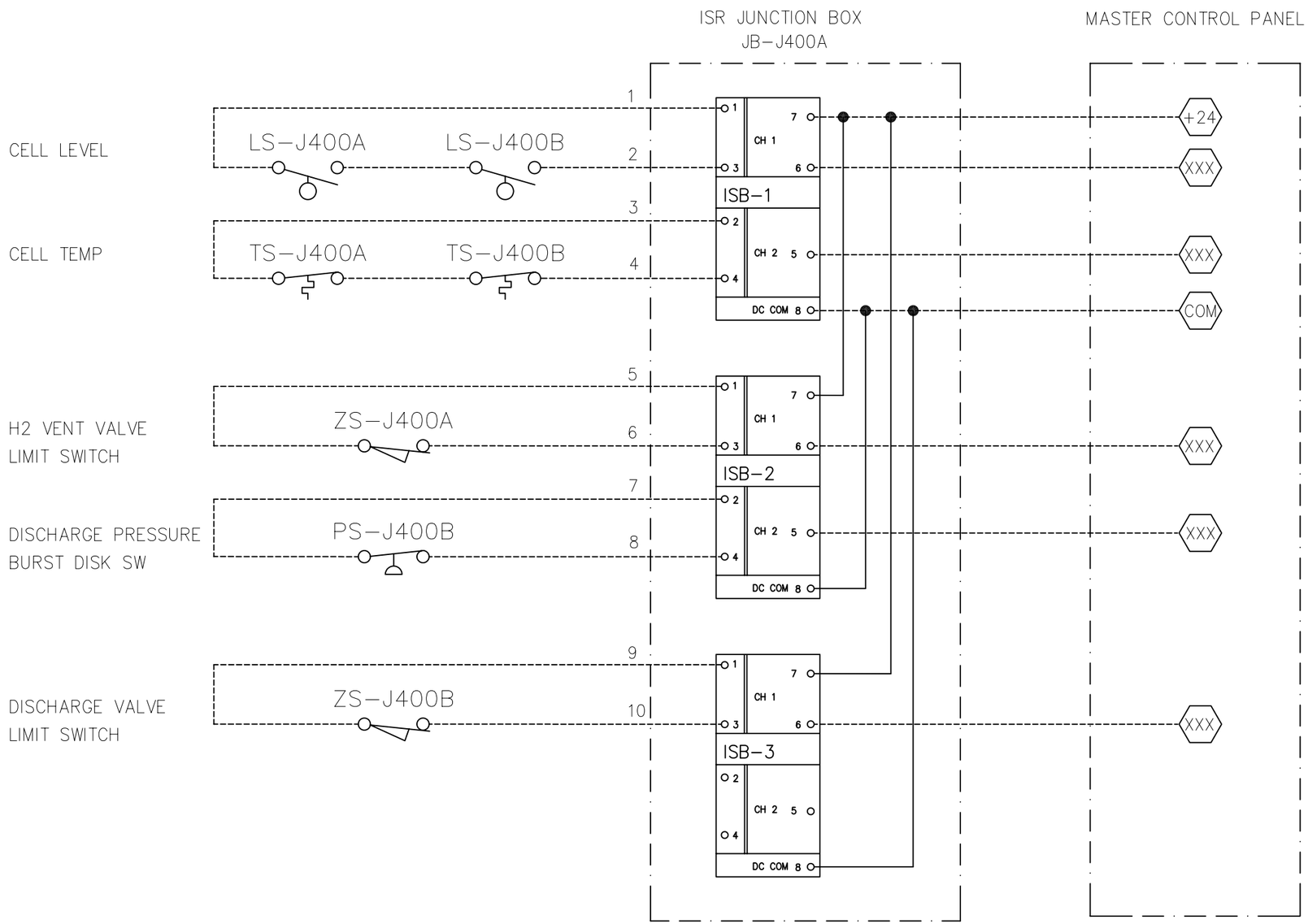

SEVERN TRENT SERVICES
CLORTEC
2660 COLUMBIA STREET, CALIFORNIA 90503
TELEPHONE No: (310) 618-9700
FAX No: (310) 618-9339
E-MAIL:
WEB SITE: www.severntrentservices.com

UNLESS OTHERWISE NOTED

NOTICE OF CONFIDENTIALITY

THIS DOCUMENT CONTAINS PROPRIETARY INFORMATION THAT IS AND SHALL REMAIN THE PROPERTY OF CLORTEC AND IS TO BE RETURNED IMMEDIATELY UPON REQUEST. ITS CONTENTS MAY NOT BE REPRODUCED, DISTRIBUTED, CIRCULATED, OR DISCLOSED TO THIRD PARTIES. RECIPIENT WILL NOT USE THIS INFORMATION FOR PURPOSES OTHER THAN INTENDED WITHOUT PRIOR WRITTEN CONSENT OF CLORTEC.

SCHEMATIC
INTRINSICALLY SAFE RELAY BOX
5 DIGITAL INPUT
P/N: 5095STD

SCALE:	CLORTEC JOB No:	SIZE:	REV:
NTS	STANDARD	B	1

DWG No:	SHEET:
5095STD-500-J400A.DWG	1 OF 1

DWG# : 5095STD-100-J400A
REV : 1
DATE: 1/18/06
ORIGINATOR: JC

TITLE: 5 DIGITAL INPUT,
CELL RACK INTRINSIC BOX

P/N: 5095STD

N/A#

ITEM	REF	DESCRIPTION	MFR	MFR P/N	CLORTEC P/N	QTY
1	ENC	ENCLOSURE, PAINTED STEEL, NEMA 4, 6"x6"x4"	HOFFMAN	A-606CHNF	5600-663	1

DWG# : 5095STD-150-J400A
REV : 1
DATE: 4/7/06
ORIGINATOR: JC

TITLE: 5 DIGITAL INPUT,
CELL RACK INTRINSIC BOX

P/N: 5095STD

N/A#

ITEM	REF	DESCRIPTION	MFR	MFR P/N	CLORTEC P/N	QTY
1	PAN	MOUNTING PAN 6x6	HOFFMAN	A-6P6	5600-664	1
2	ISB-1	INTRINSIC SAFETY BARRIER, DUAL, 24VDC	TURCK	MK122UPEX0/24VDC	5500-425	3
3	MISC	DIN RAIL, SLOTTED	ALLEN-BRADLEY	199-DR1	2102-200	1
4	PRT	PARTICIAN, INTRINSIC, 3 BARRIER	CLORTEC	5600-959	5600-959	1
5	GND	LUG, BARREL POST, ONE HOLE, STRAIGHT TONGUE, #8STR	PANDUIT	ML8-C	5600-956	1

REV	DATE	DESCRIPTION	DRAWN BY	CHECKED BY	APPROVED BY
1	1/18/06	ISSUED FOR APPROVAL	JC		

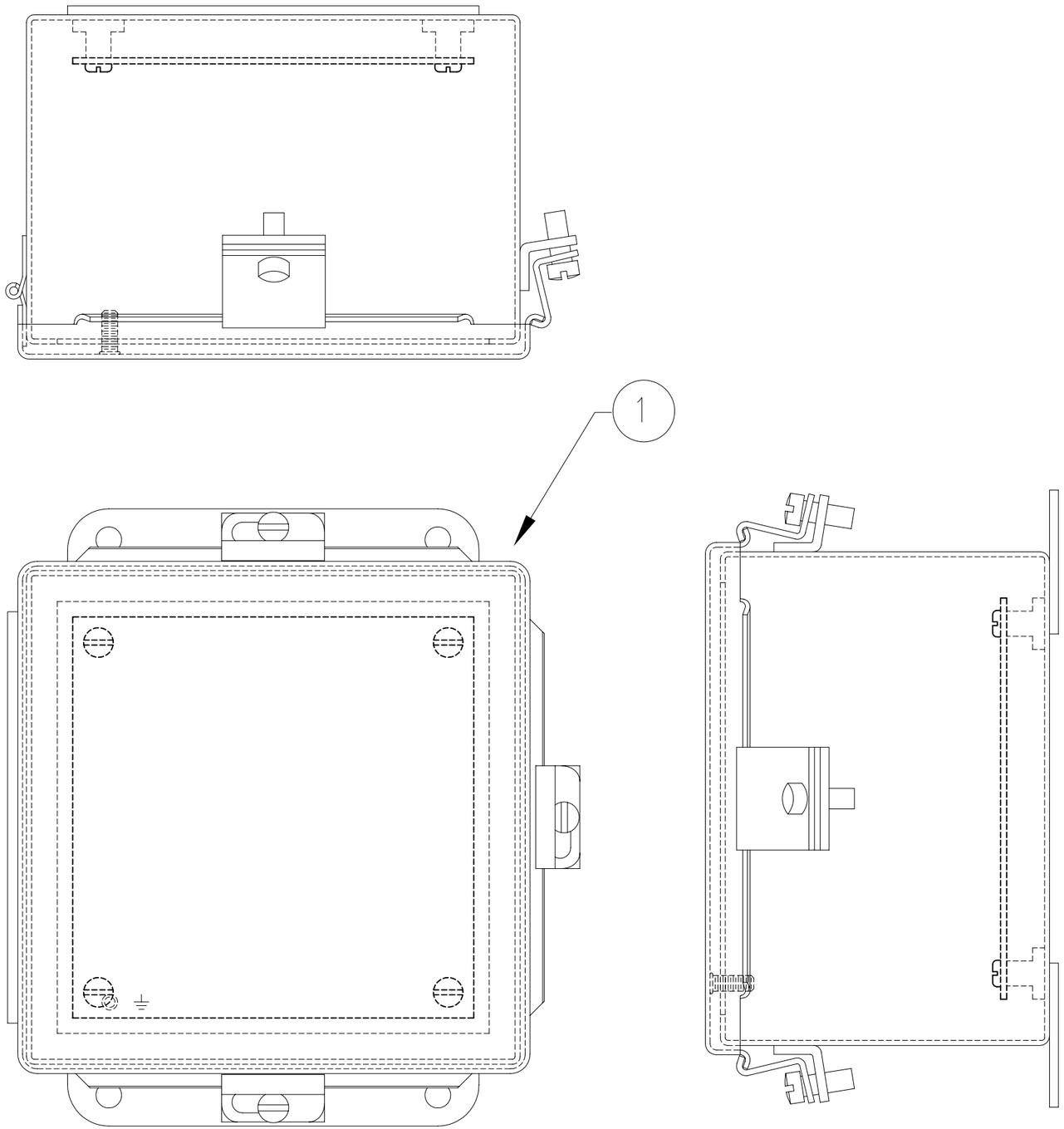

A-606CHNF

SEVERN TRENT SERVICES

CLORTEC

2660 COLUMBIA STREET, CALIFORNIA 90503

TELEPHONE No: (310) 618-9700
FAX No: (310) 618-9339
E-MAIL:
WEB SITE: www.severntrentservices.com

UNLESS OTHERWISE NOTED

NOTICE OF CONFIDENTIALITY

THIS DOCUMENT CONTAINS PROPRIETARY INFORMATION THAT IS AND SHALL REMAIN THE PROPERTY OF CLORTEC AND IS TO BE RETURNED IMMEDIATELY UPON REQUEST. ITS CONTENTS MAY NOT BE REPRODUCED, DISTRIBUTED, CIRCULATED, OR DISCLOSED TO THIRD PARTIES. RECIPIENT WILL NOT USE THIS INFORMATION FOR PURPOSES OTHER THAN INTENDED WITHOUT PRIOR WRITTEN CONSENT OF CLORTEC.

ISR ENCLOSURE
INTRINSIC BOX
5 DIGITAL INPUT
P/N: 5095STD

SCALE:	CLORTEC JOB No:	SIZE:	REV:
NTS	STANDARD	B	1
DWG No: 5095STD-100-J420A.DWG		SHEET: 1 OF 1	

REV	DATE	DESCRIPTION	DRAWN BY	CHECKED BY	APPROVED BY
1	4/7/06	ISSUED FOR APPROVAL	JC		

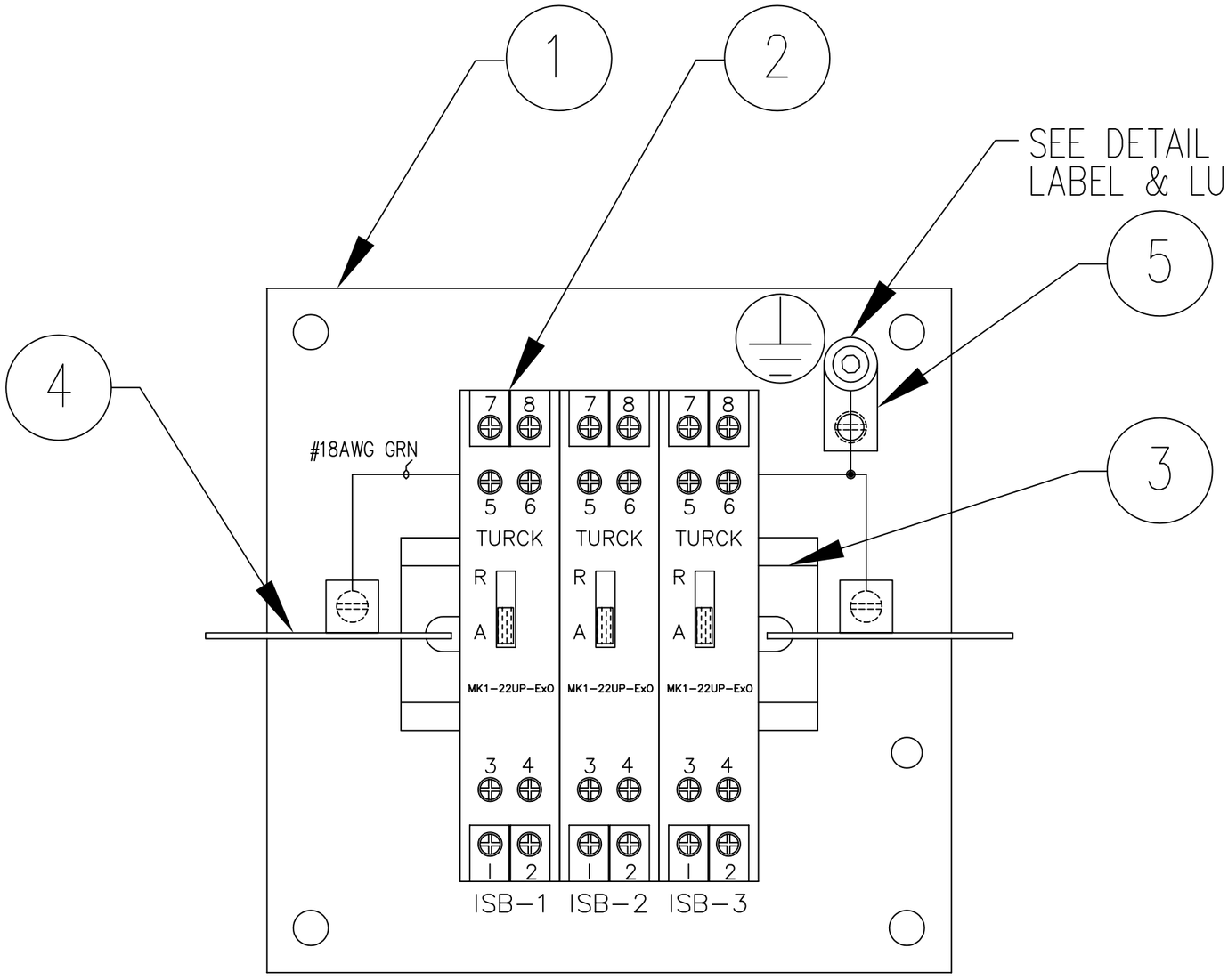

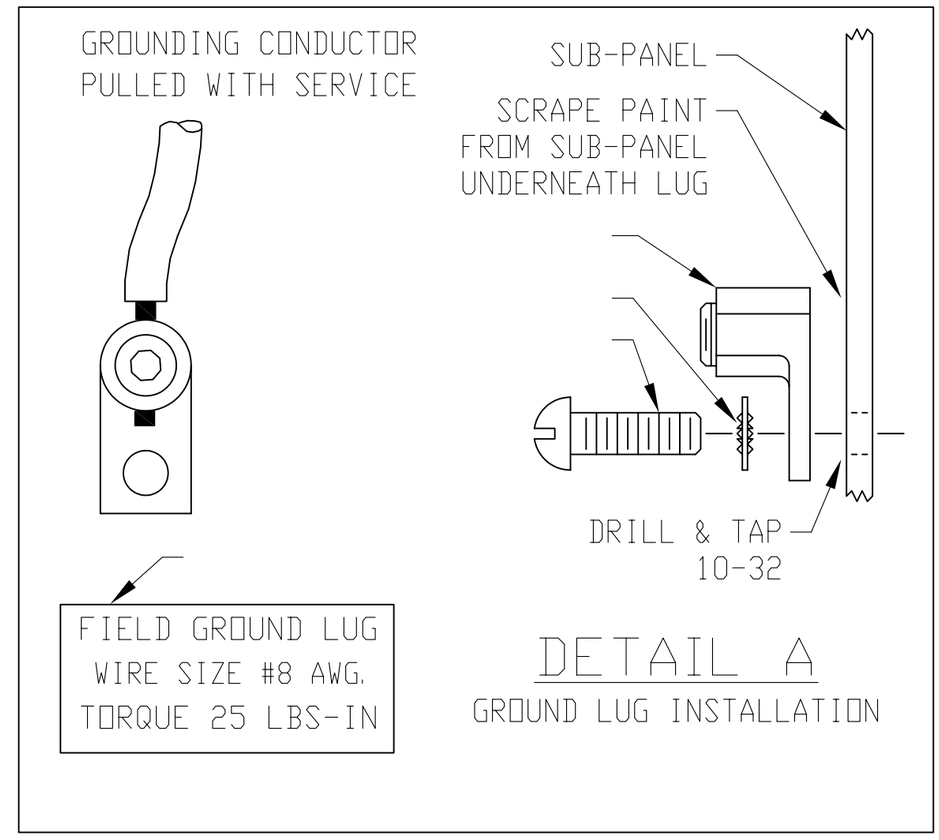

A-6P6

SEVERN TRENT SERVICES
CLORTEC
2660 COLUMBIA STREET, CALIFORNIA 90503
TELEPHONE No: (310) 618-9700
FAX No: (310) 618-9339
E-MAIL:
WEB SITE: www.severntrentservices.com

UNLESS OTHERWISE NOTED

NOTICE OF CONFIDENTIALITY

THIS DOCUMENT CONTAINS PROPRIETARY INFORMATION THAT IS AND SHALL REMAIN THE PROPERTY OF CLORTEC AND IS TO BE RETURNED IMMEDIATELY UPON REQUEST. ITS CONTENTS MAY NOT BE REPRODUCED, DISTRIBUTED, CIRCULATED, OR DISCLOSED TO THIRD PARTIES. RECIPIENT WILL NOT USE THIS INFORMATION FOR PURPOSES OTHER THAN INTENDED WITHOUT PRIOR WRITTEN CONSENT OF CLORTEC.

PANEL LAYOUT, ISR
INTRINSIC BOX
5 DIGITAL INPUT
P/N: 5095STD

SCALE:	CLORTEC JOB No:	SIZE:	REV:
NTS	STANDARD	B	1
DWG No: 5095STD-150-J420A.DWG		SHEET: 1 OF 1	

REV	DATE	DESCRIPTION	DRAWN BY	CHECKED BY	APPROVED BY
1	1/18/06	ISSUED FOR APPROVAL	JC		

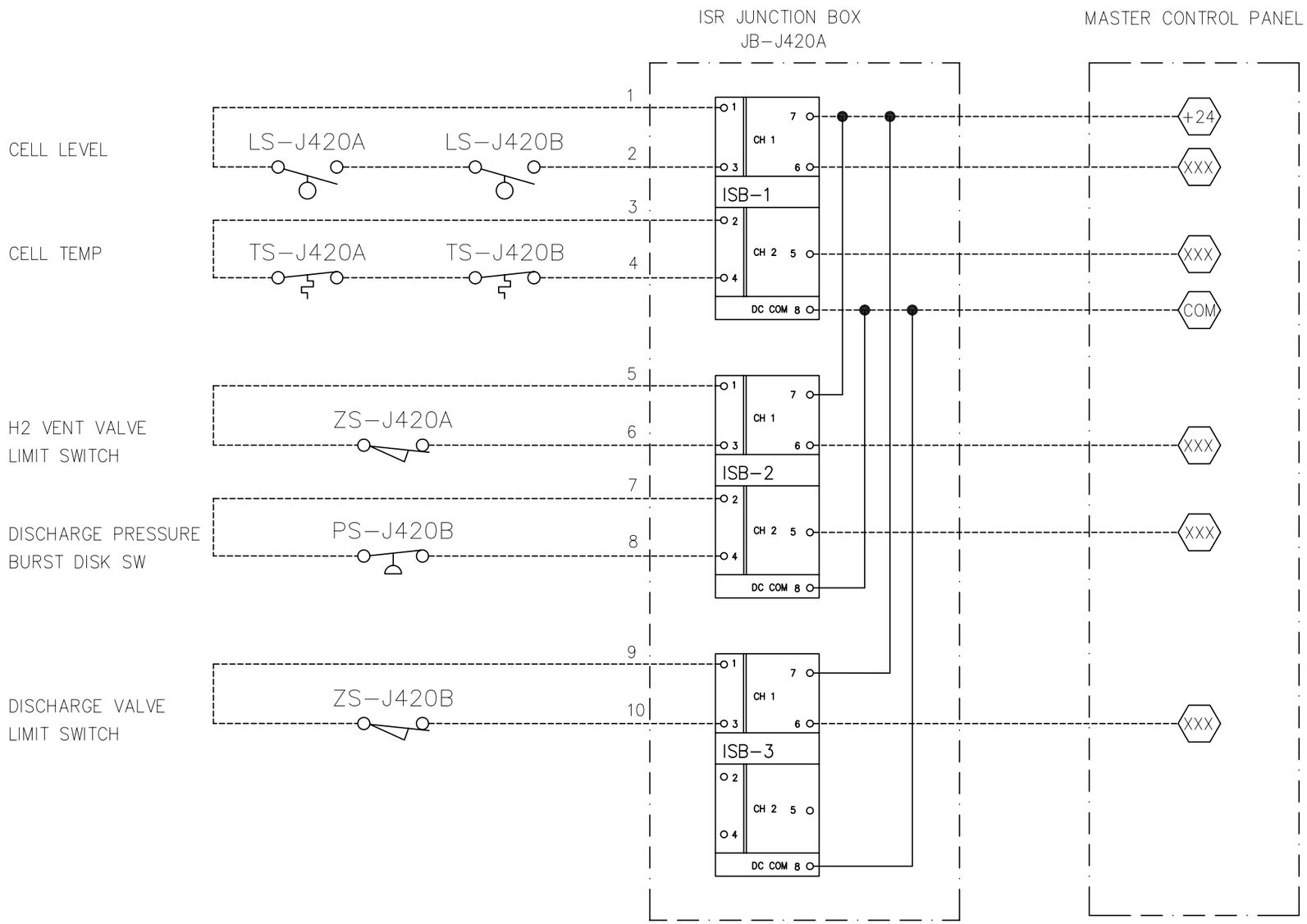

SEVERN TRENT SERVICES
CLORTEC
2660 COLUMBIA STREET, CALIFORNIA 90503
TELEPHONE No: (310) 618-9700
FAX No: (310) 618-9339
E-MAIL:
WEB SITE: www.severntrentservices.com

UNLESS OTHERWISE NOTED

NOTICE OF CONFIDENTIALITY

THIS DOCUMENT CONTAINS PROPRIETARY INFORMATION THAT IS AND SHALL REMAIN THE PROPERTY OF CLORTEC AND IS TO BE RETURNED IMMEDIATELY UPON REQUEST. ITS CONTENTS MAY NOT BE REPRODUCED, DISTRIBUTED, CIRCULATED, OR DISCLOSED TO THIRD PARTIES. RECIPIENT WILL NOT USE THIS INFORMATION FOR PURPOSES OTHER THAN INTENDED WITHOUT PRIOR WRITTEN CONSENT OF CLORTEC.

SCHEMATIC
INTRINSICALLY SAFE RELAY BOX
5 DIGITAL INPUT
P/N: 5095STD

SCALE:	CLORTEC JOB No:	SIZE:	REV:
NTS	STANDARD	B	1

DWG No: 5095STD-500-J400A.DWG

SHEET: 1 OF 1

DWG# : 5095STD-100-J420A
REV : 1
DATE: 1/18/06
ORIGINATOR: JC

TITLE: 5 DIGITAL INPUT,
CELL RACK INTRINSIC BOX

P/N: 5095STD

N/A#

ITEM	REF	DESCRIPTION	MFR	MFR P/N	CLORTEC P/N	QTY
1	ENC	ENCLOSURE, PAINTED STEEL, NEMA 4, 6"x6"x4"	HOFFMAN	A-606CHNF	5600-663	1

DWG# : 5095STD-150-J420A
REV : 1
DATE: 4/7/06
ORIGINATOR: JC

TITLE: 5 DIGITAL INPUT,
CELL RACK INTRINSIC BOX

P/N: 5095STD

N/A#

ITEM	REF	DESCRIPTION	MFR	MFR P/N	CLORTEC P/N	QTY
1	PAN	MOUNTING PAN 6x6	HOFFMAN	A-6P6	5600-664	1
2	ISB-1	INTRINSIC SAFETY BARRIER, DUAL, 24VDC	TURCK	MK122UPEX0/24VDC	5500-425	3
3	MISC	DIN RAIL, SLOTTED	ALLEN-BRADLEY	199-DR1	2102-200	1
4	PRT	PARTICIAN, INTRINSIC, 3 BARRIER	CLORTEC	5600-959	5600-959	1
5	GND	LUG, BARREL POST, ONE HOLE, STRAIGHT TONGUE, #8STR	PANDUIT	ML8-C	5600-956	1

REV	DATE	DESCRIPTION	DRAWN BY	CHECKED BY	APPROVED BY
1	1/18/06	ISSUED FOR APPROVAL	JC		

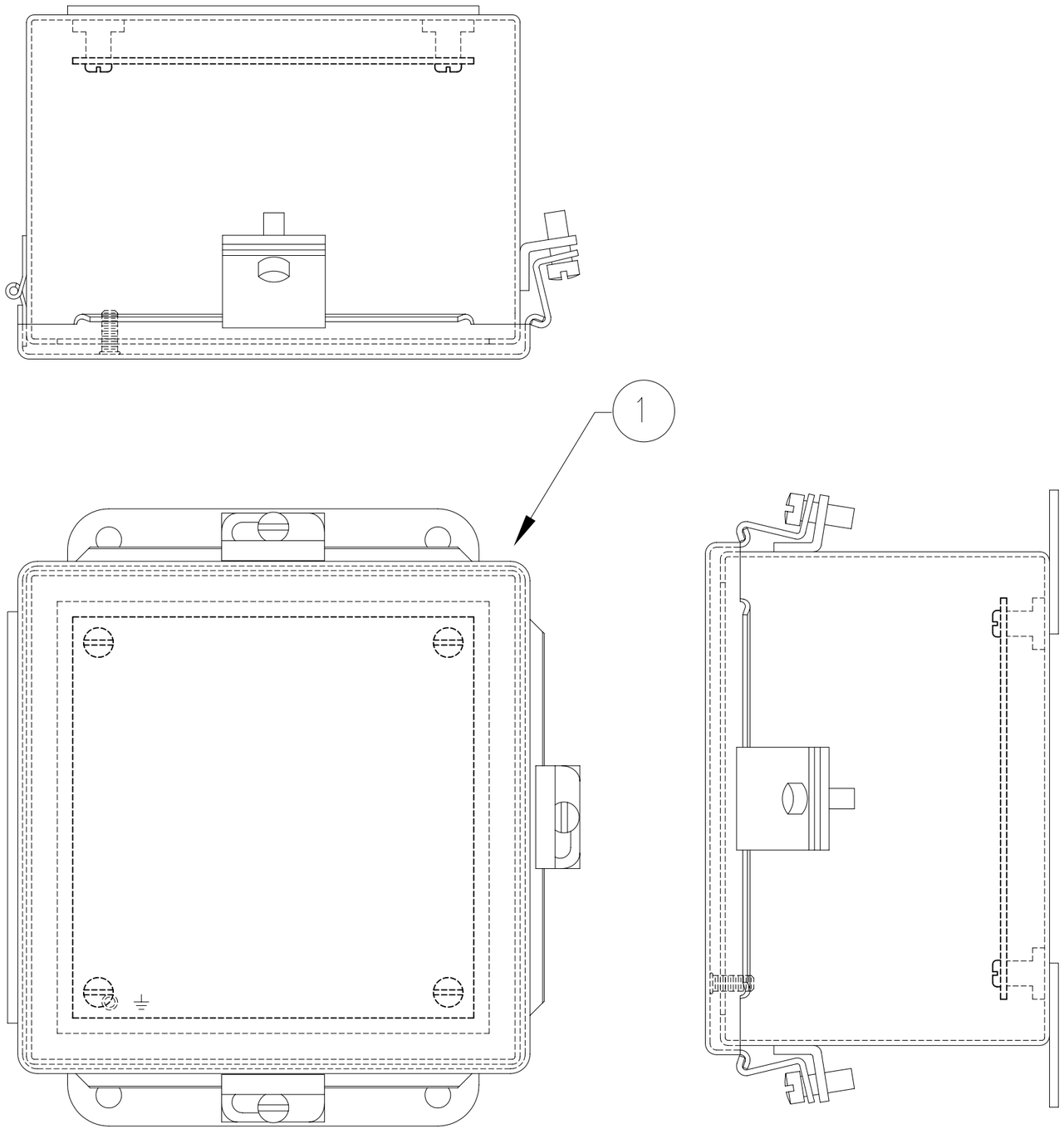

A-606CHNF

SEVERN TRENT SERVICES

CLORTEC

2660 COLUMBIA STREET, CALIFORNIA 90503

TELEPHONE No: (310) 618-9700
FAX No: (310) 618-9339
E-MAIL:
WEB SITE: www.severntrentservices.com

UNLESS OTHERWISE NOTED

NOTICE OF CONFIDENTIALITY

THIS DOCUMENT CONTAINS PROPRIETARY INFORMATION THAT IS AND SHALL REMAIN THE PROPERTY OF CLORTEC AND IS TO BE RETURNED IMMEDIATELY UPON REQUEST. ITS CONTENTS MAY NOT BE REPRODUCED, DISTRIBUTED, CIRCULATED, OR DISCLOSED TO THIRD PARTIES. RECIPIENT WILL NOT USE THIS INFORMATION FOR PURPOSES OTHER THAN INTENDED WITHOUT PRIOR WRITTEN CONSENT OF CLORTEC.

ISR ENCLOSURE
INTRINSIC BOX
5 DIGITAL INPUT
P/N: 5095STD

SCALE:	CLORTEC JOB No:	SIZE:	REV:
NTS	STANDARD	B	1

DWG No:	SHEET:
5095STD-100-J440A.DWG	1 OF 1

REV	DATE	DESCRIPTION	DRAWN BY	CHECKED BY	APPROVED BY
1	1/18/06	ISSUED FOR APPROVAL	JC		

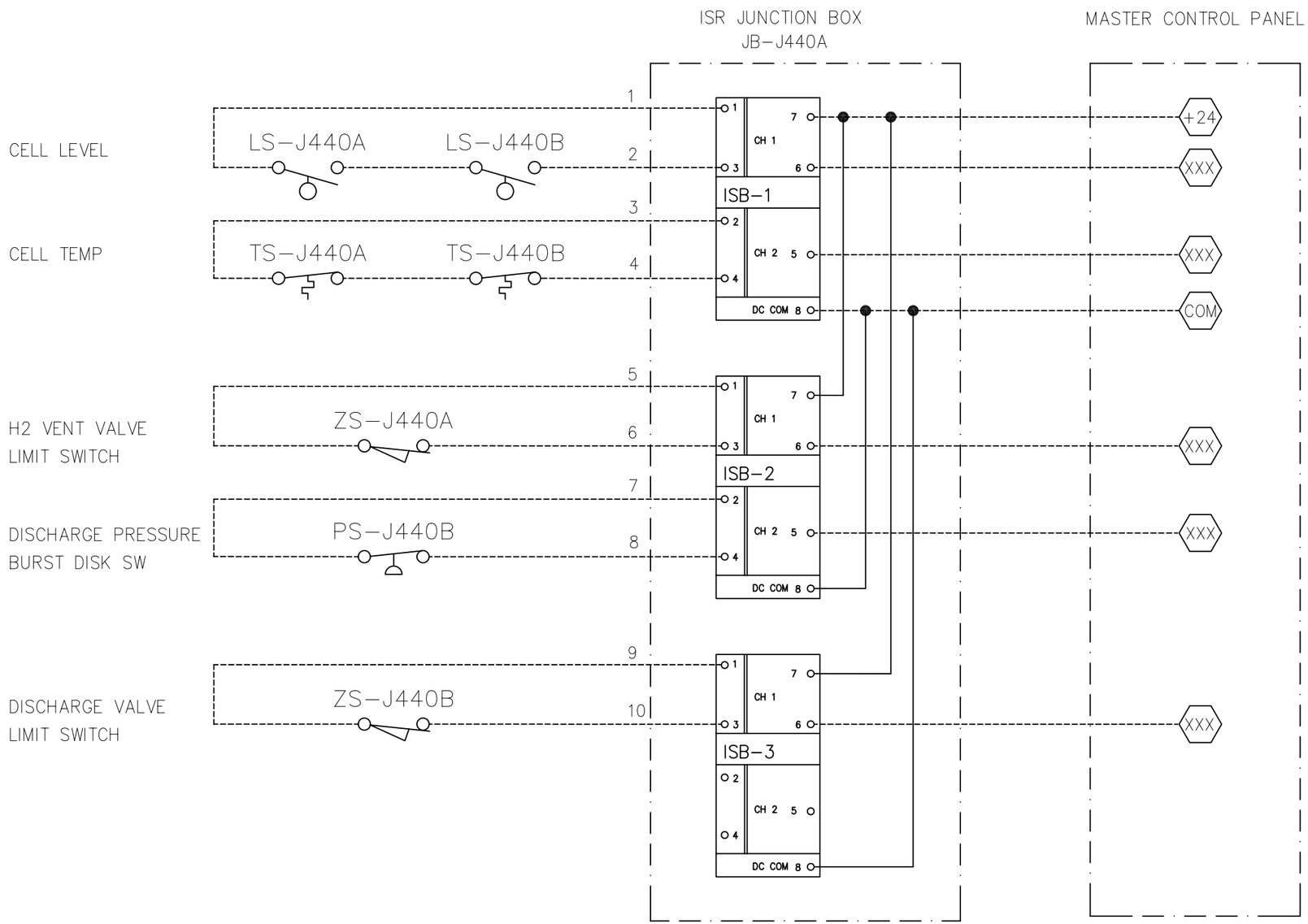

SEVERN TRENT SERVICES
CLORTEC
2660 COLUMBIA STREET, CALIFORNIA 90503
TELEPHONE No: (310) 618-9700
FAX No: (310) 618-9339
E-MAIL:
WEB SITE: www.severntrentservices.com

UNLESS OTHERWISE NOTED

NOTICE OF CONFIDENTIALITY

THIS DOCUMENT CONTAINS PROPRIETARY INFORMATION THAT IS AND SHALL REMAIN THE PROPERTY OF CLORTEC AND IS TO BE RETURNED IMMEDIATELY UPON REQUEST. ITS CONTENTS MAY NOT BE REPRODUCED, DISTRIBUTED, CIRCULATED, OR DISCLOSED TO THIRD PARTIES. RECIPIENT WILL NOT USE THIS INFORMATION FOR PURPOSES OTHER THAN INTENDED WITHOUT PRIOR WRITTEN CONSENT OF CLORTEC.

SCHEMATIC
INTRINSICALLY SAFE RELAY BOX
5 DIGITAL INPUT
P/N: 5095STD

SCALE:	CLORTEC JOB No:	SIZE:	REV:
NTS	STANDARD	B	1

DWG No: 5095STD-500-J440A.DWG

SHEET: 1 OF 1

REV	DATE	DESCRIPTION	DRAWN BY	CHECKED BY	APPROVED BY
1	4/7/06	ISSUED FOR APPROVAL	JC		

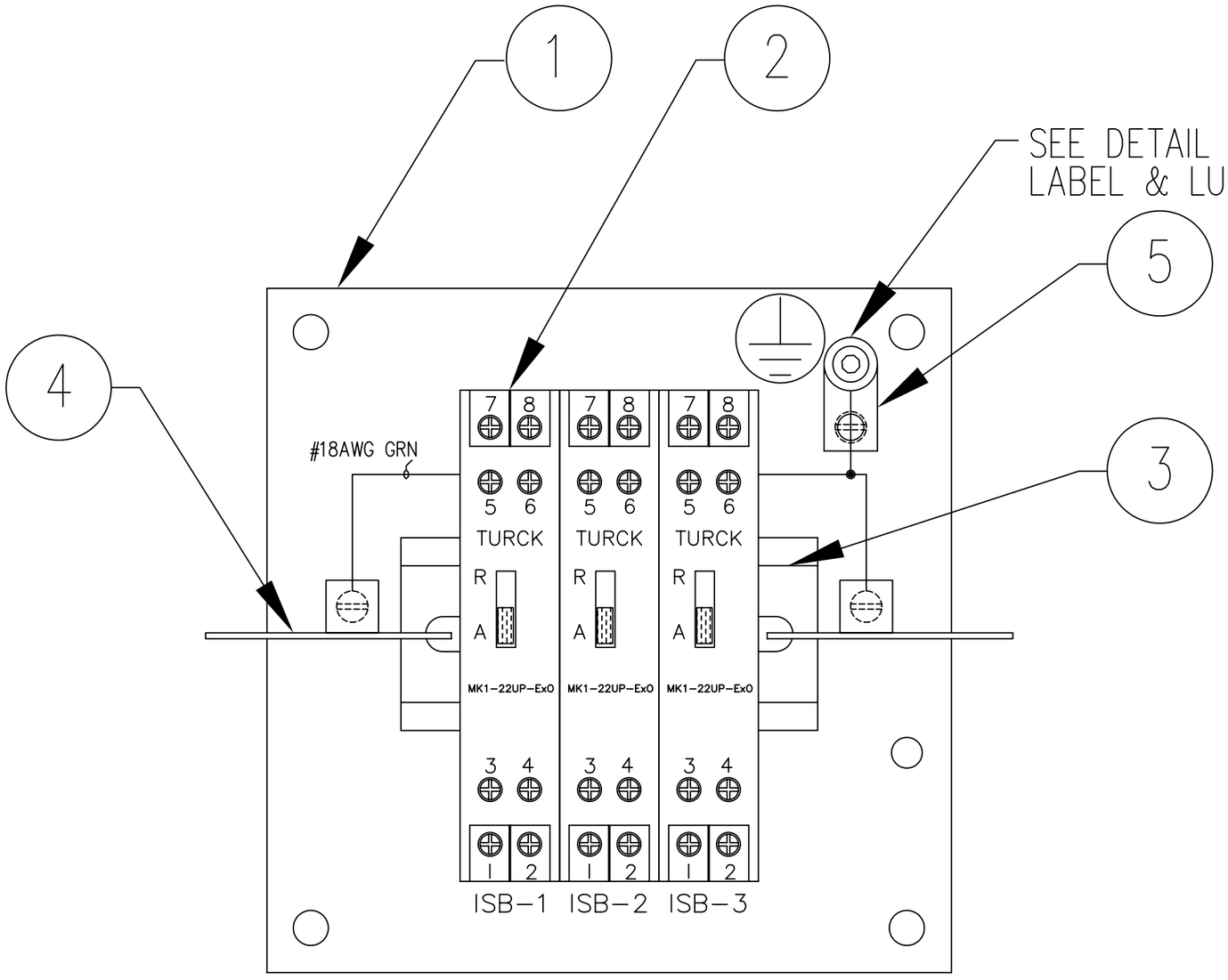

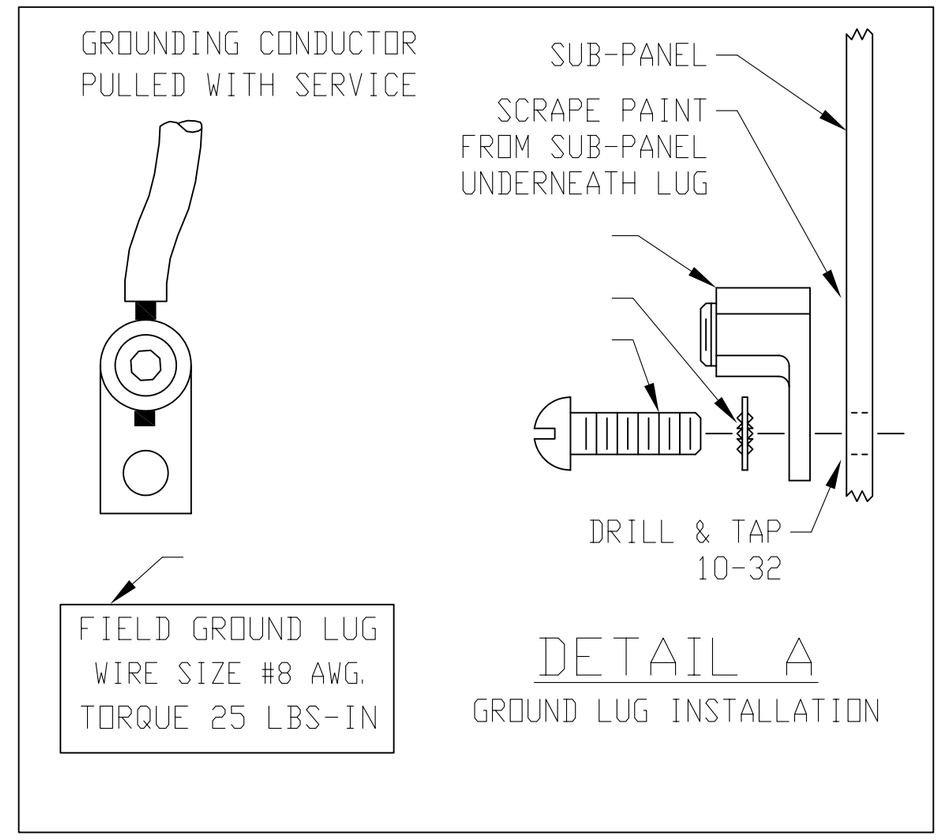

A-6P6

SEVERN TRENT SERVICES
CLORTEC
2660 COLUMBIA STREET, CALIFORNIA 90503
TELEPHONE No: (310) 618-9700
FAX No: (310) 618-9339
E-MAIL:
WEB SITE: www.severntrentservices.com

UNLESS OTHERWISE NOTED

NOTICE OF CONFIDENTIALITY
THIS DOCUMENT CONTAINS PROPRIETARY INFORMATION THAT IS AND SHALL REMAIN THE PROPERTY OF CLORTEC AND IS TO BE RETURNED IMMEDIATELY UPON REQUEST. ITS CONTENTS MAY NOT BE REPRODUCED, DISTRIBUTED, CIRCULATED, OR DISCLOSED TO THIRD PARTIES. RECIPIENT WILL NOT USE THIS INFORMATION FOR PURPOSES OTHER THAN INTENDED WITHOUT PRIOR WRITTEN CONSENT OF CLORTEC.

PANEL LAYOUT, ISR
INTRINSIC BOX
5 DIGITAL INPUT
P/N: 5095STD

SCALE:	CLORTEC JOB No:	SIZE:	REV:
NTS	STANDARD	B	1
DWG No: 5095STD-150-J440A.DWG		SHEET: 1 OF 1	

DWG# : 5095STD-100-J440A
REV : 1
DATE: 1/18/06
ORIGINATOR: JC

TITLE: 5 DIGITAL INPUT,
CELL RACK INTRINSIC BOX

P/N: 5095STD

N/A#

ITEM	REF	DESCRIPTION	MFR	MFR P/N	CLORTEC P/N	QTY
1	ENC	ENCLOSURE, PAINTED STEEL, NEMA 4, 6"x6"x4"	HOFFMAN	A-606CHNF	5600-663	1

DWG# : 5095STD-150-J440A
REV : 1
DATE: 4/7/06
ORIGINATOR: JC

TITLE: 5 DIGITAL INPUT,
CELL RACK INTRINSIC BOX

P/N: 5095STD

N/A#

ITEM	REF	DESCRIPTION	MFR	MFR P/N	CLORTEC P/N	QTY
1	PAN	MOUNTING PAN 6x6	HOFFMAN	A-6P6	5600-664	1
2	ISB-1	INTRINSIC SAFETY BARRIER, DUAL, 24VDC	TURCK	MK122UPEX0/24VDC	5500-425	3
3	MISC	DIN RAIL, SLOTTED	ALLEN-BRADLEY	199-DR1	2102-200	1
4	PRT	PARTICIAN, INTRINSIC, 3 BARRIER	CLORTEC	5600-959	5600-959	1
5	GND	LUG, BARREL POST, ONE HOLE, STRAIGHT TONGUE, #8STR	PANDUIT	ML8-C	5600-956	1

Section
4

RECTIFIER

REV	DATE	DESCRIPTION	DRAWN BY	CHECKED BY	APPROVED BY
0	08/10/2006	ISSUED FOR APPROVAL	CM	JPM	

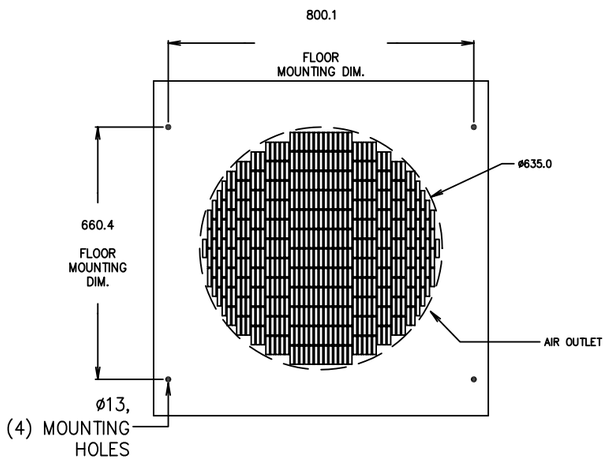

TOP VIEW

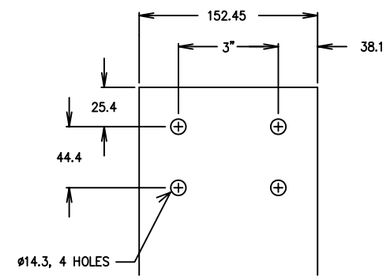

OUTPUT BUS

DRILLING DETAIL
N.T.S.
(ABOVE 500ADC)

NOTES:
1. REAR PANEL TO BE REMOVABLE.
2. UNIT TO BE CONVECTION COOLED, BLOWER ASSISTED.
3. CABINET FINISH: ANSI 61 GRAY.
4. FOR SCHEMATIC SEE DWG. # RCT1500-01E.dwg
5. POS. AND NEG. OUTPUTS CONSIST OF MULTIPLES OF 6mm X 152.4mm COPPER BUS, FOR OUTPUT RATINGS ABOVE 1000A.
6. OUTPUT BUSBARS INTERNAL, BOTTOM ACCESS
7. CONTROL BOX MOUNTED ON THE FRONT DOOR
8. BUILD TO ENTELA (CSA) STANDARDS
9. PROVIDE DOOR GROUNDING, TRANSFORMER CORE GROUNDING

LT1	–	PWR. ON LIGHT, 22mm CUTOUT HOLE
LT2	–	DC ON LIGHT, 22mm CUTOUT HOLE
LT3	–	FAULT LIGHT, 22mm CUTOUT HOLE
M1	–	DC VOLTMETER, STD. 114.3mm METER
M2	–	DC AMMETER, STD. 114.3mm
PB1	–	EMERGENCY STOP, 30mm CUTOUT HOLE

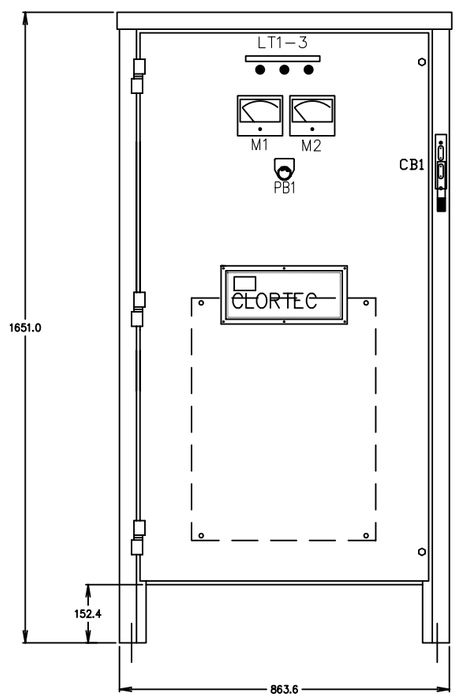

FRONT VIEW

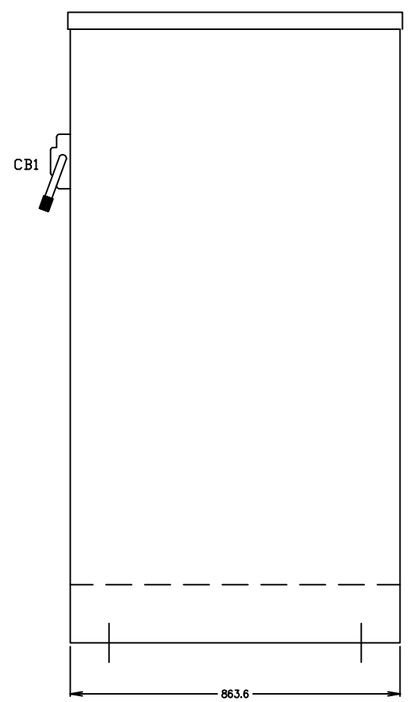

RIGHT SIDE VIEW

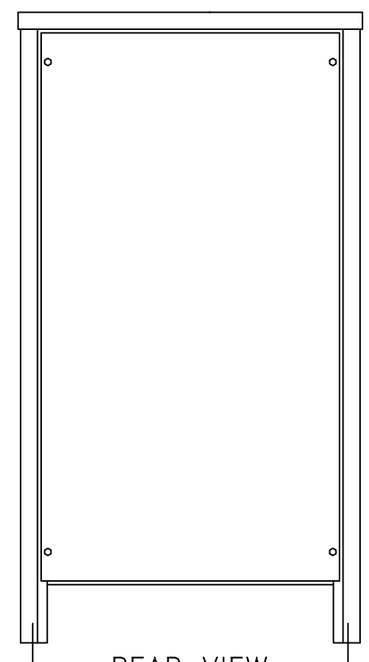

REAR VIEW

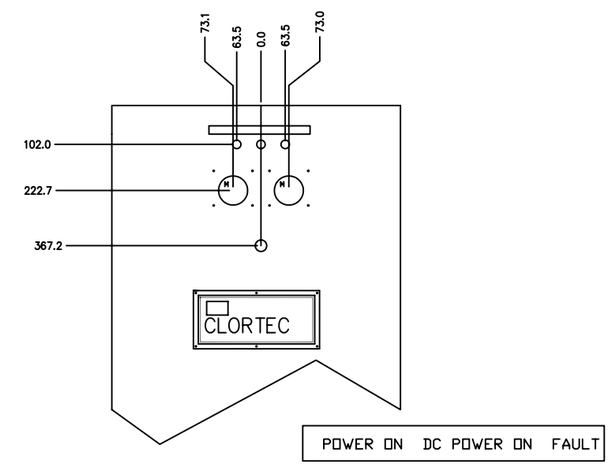

RCT-1500-02M.dwg/JOB# 63953-001

NOTE : ALL DIMENSIONS ARE IN MM
RECTIFIER OPERATING WEIGHT : 1067 kGS.

SEVERN TRENT SERVICES
CLORTEC
2660 COLUMBIA STREET TORRANCE, CALIFORNIA 90503
TELEPHONE No: (310)-618-9700 FAX No: (310)-618-1384
WEB SITE: www.severntrentservices.com

UNLESS OTHERWISE NOTED
TOLERANCES:

TYPE:	INCHES	[MM]
FRACTIONS	± 1/8"	
.X	± .1"	± 2.5
.XX	± .01"	± .51
.XXX	± .005"	± .127
ANGLES	± 1°	

NOTICE OF CONFIDENTIALITY
THIS DOCUMENT CONTAINS PROPRIETARY INFORMATION THAT IS AND SHALL REMAIN THE PROPERTY OF CLORTEC AND IS TO BE RETURNED IMMEDIATELY UPON REQUEST. ITS CONTENTS MAY NOT BE REPRODUCED, DISTRIBUTED, CIRCULATED, OR DISCLOSED TO THIRD PARTIES. RECIPIENT WILL NOT USE THIS INFORMATION FOR PURPOSES OTHER THAN INTENDED WITHOUT PRIOR WRITTEN CONSENT OF CLORTEC.

CITY OF WINNIPEG
WATER TREATMENT PLANT

PROJECT:

TITLE:
RECTIFIER ELEVATION
SECONDARY THYRISTOR POWER SUPPLY
600VAC, 3ø
1500A, 110VDC, FORCED AIR COOLED

SCALE:	CLORTEC JOB No:	SIZE:	REV:
1 : 16	CPG0465		0

DWG No: RCT1500-110-600-3-60-1500-06-WPG
SHEET: 1 OF 2

REV	DATE	DESCRIPTION	DRAWN BY	CHECKED BY	APPROVED BY
0	08/10/2006	ISSUED FOR APPROVAL	CAM	JPM	

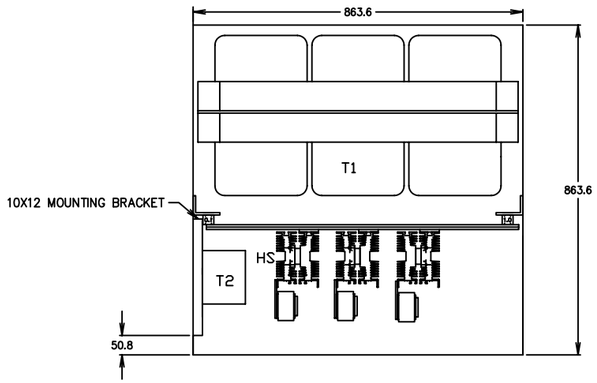

TOP VIEW

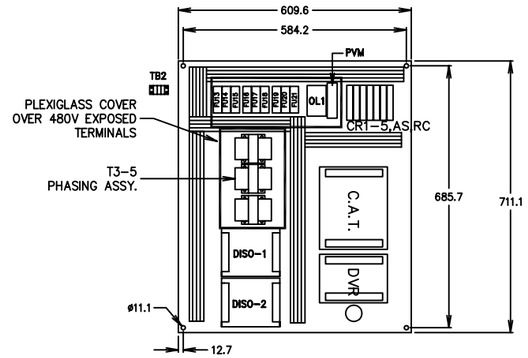

INTERNAL PANEL LAYOUT

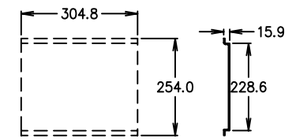

TRANSFORMER & CONTACTOR
MOUNTING PLATE
WELDED TO THE SIDE WALL

NOTES:
1. REAR PANEL TO BE REMOVABLE.
2. UNIT TO BE CONVECTION COOLED, BLOWER ASSISTED.
3. CABINET FINISH: POWDER COAT, ANSI 61 GRAY
4. FOR SCHEMATIC SEE DWG. # RCT1500-01E.DWG
5. POS. AND NEG. OUTPUTS CONSIST OF MULTIPLES OF 6 X 152.4 COPPER BUS, FOR OUTPUT RATINGS ABOVE 1000A.
6. OUTPUT BUSBARS INTERNAL, BOTTOM ACCESS
7. CONTROL PANEL MOUNTED ON THE FRONT DOOR
8. BUILD TO ENTELA (CSA) STANDARDS
9. PROVIDE DOOR GROUNDING, TRANSFORMER CORE GROUNDING
10. DOOR SWITCHES MOUNTED UNDER FRONT DOOR AND REAR PANEL TO TRIP THE RECTIFIER

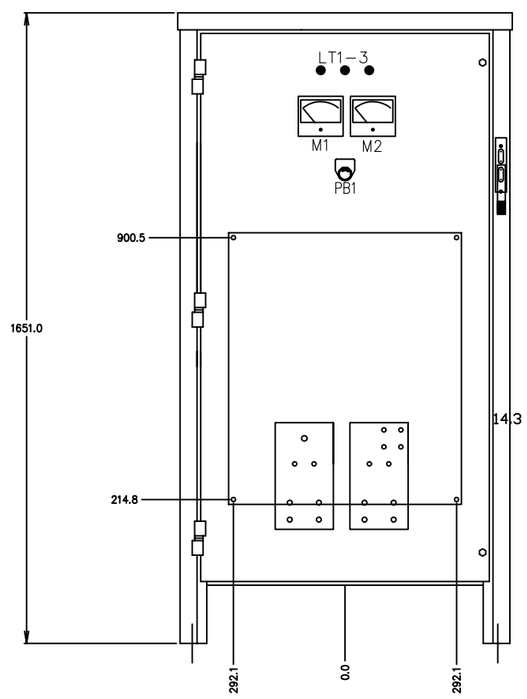

FRONT VIEW

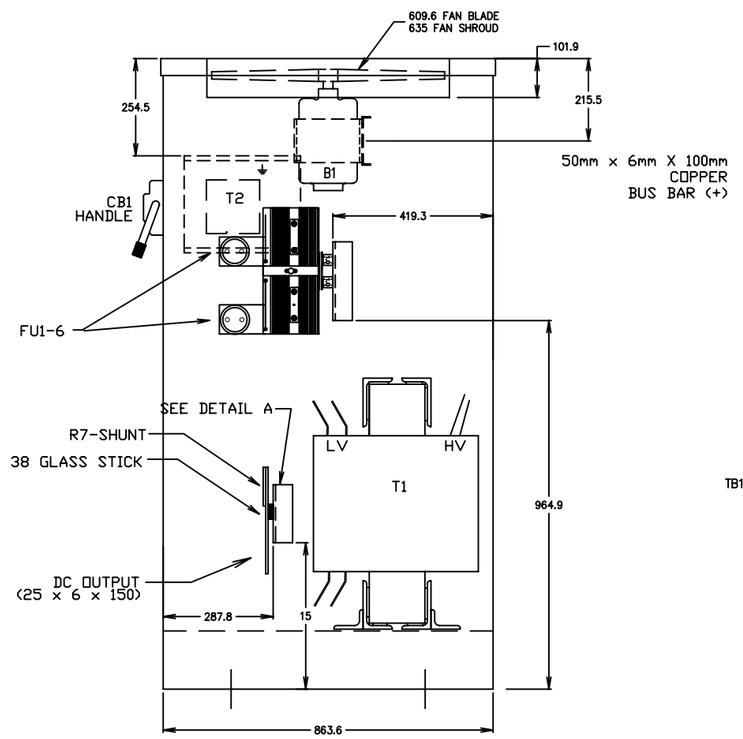

RIGHT SIDE VIEW

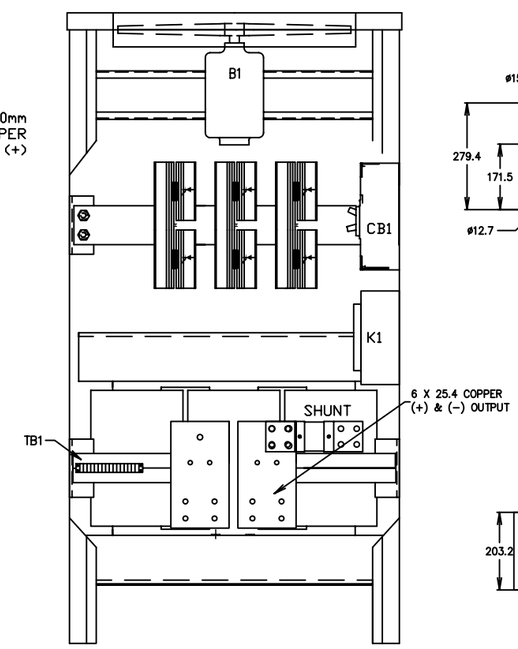

FRONT VIEW-OPEN DOOR

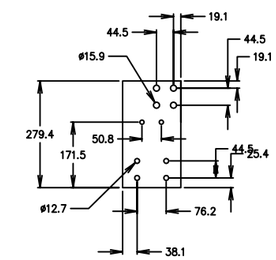

NEGATIVE BUS DETAIL

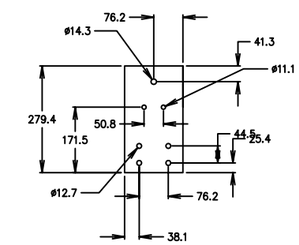

POSITIVE BUS DETAIL

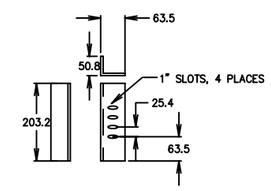

DETAIL 'A'

RCT-1500-03M.dwg/JOB# 63953-001

NOTE : ALL DIMENSIONS ARE IN MM
RECTIFIER OPERATING WEIGHT : 1067 kGS.

SEVERN TRENT SERVICES **CLORTEC**

2660 COLUMBIA STREET TORRANCE, CALIFORNIA 90503
TELEPHONE No: (310)-618-9700 FAX No: (310)-618-1384
WEB SITE: www.severntrentservices.com

UNLESS OTHERWISE NOTED

TOLERANCES: TYPE:	INCHES	[MM]
FRACTIONS	± 1/8"	
.X	± .1"	± 2.5
.XX	± .01"	± .51
.XXX	± .005"	± .127
ANGLES	± 1°	

NOTICE OF CONFIDENTIALITY

THIS DOCUMENT CONTAINS PROPRIETARY INFORMATION THAT IS AND SHALL REMAIN THE PROPERTY OF CLORTEC AND IS TO BE RETURNED IMMEDIATELY UPON REQUEST. ITS CONTENTS MAY NOT BE REPRODUCED, DISTRIBUTED, CIRCULATED, OR DISCLOSED TO THIRD PARTIES. RECIPIENT WILL NOT USE THIS INFORMATION FOR PURPOSES OTHER THAN INTENDED WITHOUT PRIOR WRITTEN CONSENT OF CLORTEC.

CITY OF WINNIPEG
WATER TREATMENT PLANT

PROJECT:

TITLE: RECTIFIER ELEVATION
SECONDARY THYRISTOR POWER SUPPLY
600 VAC, 3ø
1500A, 110VDC, FORCED AIR COOLED

SCALE:	CLORTEC JOB No:	SIZE:	REV:
1 : 16	CPG0465		0

DWG No:	SHEET:
RCT1500-110-600-3-60-1500-06-WPG	2 OF 2

REV	DATE	DESCRIPTION	DRAWN BY	CHECKED BY	APPROVED BY
0	08/10/2006	ISSUED FOR APPROVAL	CM	JPM	

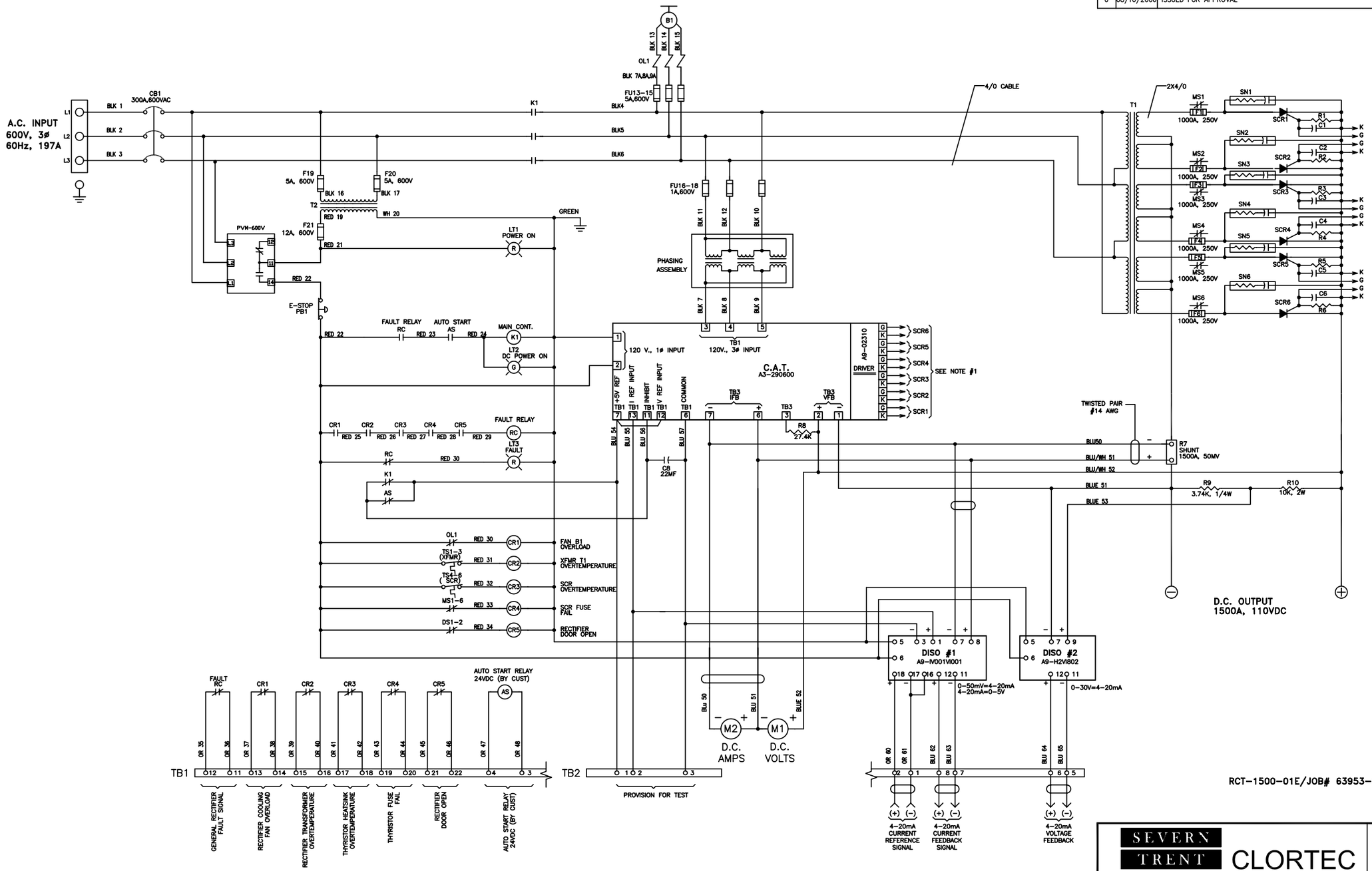

NOTES:

1. ALL LEADS TO SCR'S TO BE TWISTED PAIRS OF BLACK (TO "K") AND RED OR WHITE (TO "G").
2. CUSTOMER TO RUN INTERCONNECTING WIRES BETWEEN BASIC AND REMOTE, WITH #16 AWG SHIELDED WIRE BEING USED FOR TERMINALS 1, 2, 6 THRU 8. THE SHIELDS ARE NOT TO CARRY CURRENT AND MUST BE GROUNDED AT ONE END ONLY. FOR ADDITIONAL WIRING INFO. SEE THE INSTRUCTION MANUAL.
3. USE ALL ENTELA APPROVED CABLES.
4. RECTIFIER TEST PER ENTELA REQUIREMENT

SEVERN TRENT SERVICES
CLORTEC
2660 COLUMBIA STREET TORRANCE, CALIFORNIA 90503
TELEPHONE No: (310) 618-9700 FAX No: (310) 618-1384
WEB SITE: www.severntrentservices.com

UNLESS OTHERWISE NOTED
TOLERANCES:

TYPE:	INCHES	[MM]
FRACTIONS	± 1/8"	
.X	± .1"	± 2.5
.XX	± .01"	± .51
.XXX	± .005"	± .127
ANGLES	± 1°	

NOTICE OF CONFIDENTIALITY
THIS DOCUMENT CONTAINS PROPRIETARY INFORMATION THAT IS AND SHALL REMAIN THE PROPERTY OF CLORTEC AND IS TO BE RETURNED IMMEDIATELY UPON REQUEST. ITS CONTENTS MAY NOT BE REPRODUCED, DISTRIBUTED, CIRCULATED, OR DISCLOSED TO THIRD PARTIES. RECIPIENT WILL NOT USE THIS INFORMATION FOR PURPOSES OTHER THAN INTENDED WITHOUT PRIOR WRITTEN CONSENT OF CLORTEC.

CITY OF WINNIPEG
WATER TREATMENT PLANT

PROJECT:

TITLE: ELECTRICAL SCHEMATIC FOR
SECONDARY THYRISTOR POWER SUPPLY
600 VAC, 3Ø
1500 A, 110VDC, FORCED AIR COOLED

SCALE:	CLORTEC JOB No:	SIZE:	REV:
NTS	CPG0465	B	0

DWG No: RCT1500-01E

SHEET: 1 OF 1

RECTIFIER TO CELL GENERATOR CONNECTIONS

Rectifier Bus Bar and Cables Connection

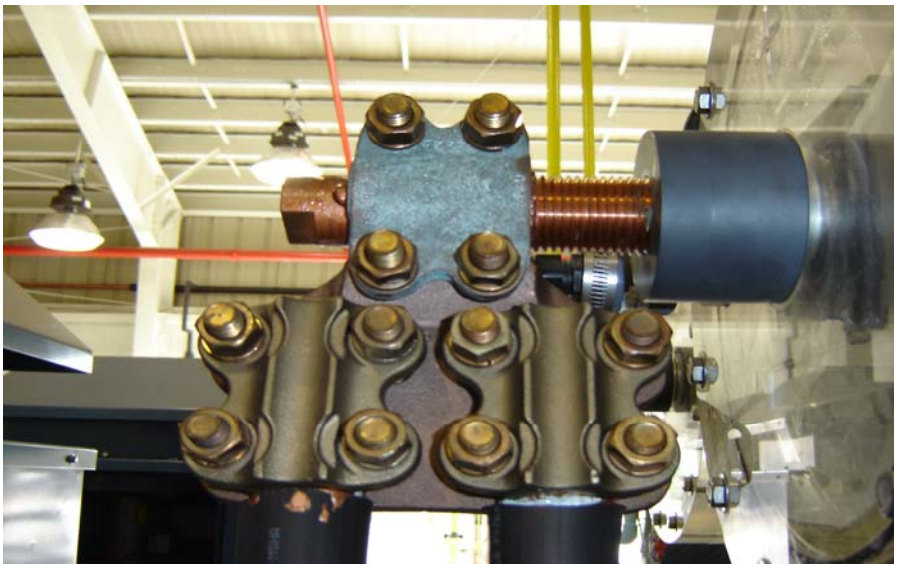

Termination of Cables in Generator Cell

The cables are usually laid on the floor between the rectifier and Generator. The customer has the option to provide cable trays or strut along the floor to keep the cable off the floor.

Section
5

WATER SOFTENER

CP 416s OD

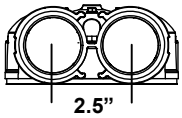

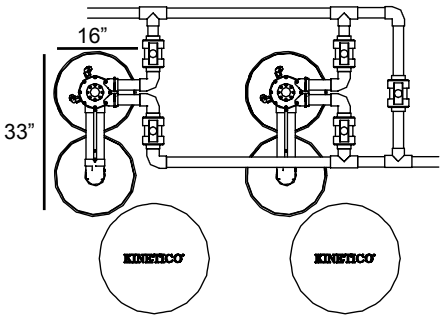

System Components

Number of Parallel Systems 2
Media Vessels (qty) Size ..... (4) 16 x 65”
Media Vessel Construction ..... Wrapped Polyethylene
Empty Bed Volume ..... 6.55 ft^3
Media / Vessel ..... 4.0 ft^3 Non Solvent Cation Resin
Bed Depth / Free Board ..... 50” / 15“
Riser Tube ..... 1” ABS
Distributor Upper ..... 0.014” Slots, ABS Basket
Lower ..... 0.014” Slots, ABS Basket
Under bedding ..... 0.75 ft^3 (75 lbs), ¼ x ⅛ Gravel
Regeneration Control ..... Non-electric Use Meter
Regeneration Type ..... Countercurrent
Meter Type ..... 2.2 - 100.0 gpm Polypropylene Turbine

Inlet Water Quality

Pressure Range ..... 25 – 125 psi Dynamic Pressure
Temperature Range ..... 35 – 120° F
pH Range ..... 5 – 10 SU
Free Chlorine Cl_2 (Max.) ..... 2.0 mg/l
Hardness as $CaCO_3$ (Max.) ..... 49 gpg

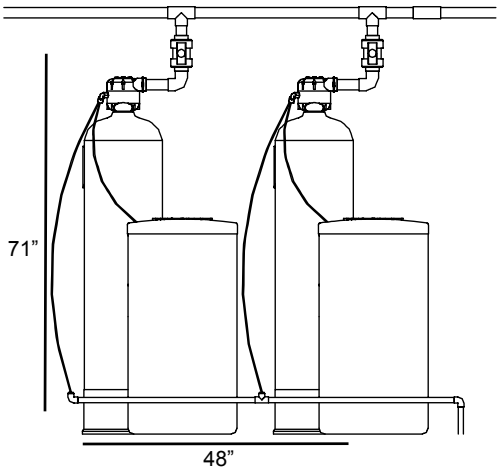

Operating Specs

Flow Range – Overdrive (15 / 30 psig) ..... 70.0– 94.0 gpm
Flow Range – Alternating (15 / 30 psig) ..... 46.0 – 66.0 gpm
Unit Dimensions (width x depth x height) ..... 33 x 48 x 71”
Weight (Operating / Shipping) ..... 1300 / 900 lbs.

Connections

Unit Inlet / Outlet Connections ..... Custom Adapter and E-Clip
(1 ½” Brass Sweat Fittings Included)
Drain Connection ..... 0.625” Tube
Brine Line Connection ..... 0.375” Tube
Power ..... None

System Part Numbers

CP 216s OD, 24 X 40 brine tank, media separate (qty) 11182 (2)
CP 216s OD, no brine tank, media separate (qty) 11168 (2)
CP 216s OD, empty, no brine tank (qty) 11186 (2)

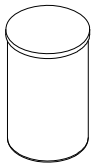

Brine Tank Options

Tank Description ..... 24” x 40”
Brine Tank Part Number 10586
Material ..... HDPE
Salt Capacity ..... 500 lbs.

Regeneration Specifications

Regeneration Volume / Time ..... 160 gallons / 90 minutes
Backwash Flow Control ..... 7.00 gpm
Brine Refill Flow Control ..... 0.70 gpm

Overdrive Operation

Disc Selection
(Compensated Hardness*)

Setting	Capacity	Efficiency	Dosing	Meter Disc	1	2	3	4	5	6	7	8
24 lbs.	88,000 grains	3,700 gr./lb.	6.0 lbs./ft^3		5	9	13	16	19	22	25	30
40 lbs.	112,000 grains	2,800 gr./lb.	10.0 lbs./ft^3		6	12	16	21	25	30	35	40
				Peak flow during regeneration:	70	70	70	70	61.7	56.1	52.1	49.1

Alternating Operation

Setting	Capacity	Efficiency	Dosing	Meter Disc	1	2	3	4	5	6	7	8
24 lbs.	88,000 grains	3,700 gr./lb.	6.0 lbs./ft^3		5	10	15	20	25	30	35	40
40 lbs.	112,000 grains	2,800 gr./lb.	10.0 lbs./ft^3		7	13	20	26	32	38	43	49
				Flow during regeneration (@ 15 psig):	58	58	58	58	58	56.1	52.1	49.1
				Gallons/Regeneration:	**15,192**	**7,596**	**5,064**	**3,798**	**3,038**	**2,532**	**2,170**	**1,899**

*Compensated hardness in gpg = Hardness + (3 x Fe in mg/l)

Operating Profile

Softener shall remove hardness to less than 1/2 gpg when operated in accordance with the operating instructions. The system shall include two sets of duplex systems (two tank systems). Each duplex configuration shall be flexible to operate in alternating or parallel mode depending on installed program disc. In alternating mode, one tank will be on-line during service. In parallel mode, both tanks will be on-line during service. With either mode, during regeneration cycles, one tank shall provide water to service and to the regenerating tank. A water meter shall initiate system regeneration. The water meter shall measure the processed volume and be adjustable. Service flow shall be down-flow and regeneration flow shall be up-flow.

Regeneration Control Valve

The regeneration control valve shall be top mounted (top of media tank), and manufactured from non-corrosive materials. Control valve shall not weigh more than four pounds. Control valve shall provide service and regeneration control for two media tanks. Inlet and outlet ports shall accept a quick connect, double o-ring sealed adapter. Interconnection between tanks shall be made through the regeneration valve with a quick connect adapter. Control valve shall operate using a minimum inlet pressure of 25 psi. Pressure shall be used to drive all valve functions. No electric hook-up shall be required. Control valve shall incorporate four operational cycles including; service, brine draw, slow rinse, and a combined fast rinse and brine refill. Service cycle shall operate in a down-flow direction. The brine cycle shall flow up-flow, opposite the service flow, providing a countercurrent regeneration. Control valve shall contain a fixed orifice eductor nozzle and self-adjusting backwash flow control. The control valve will prevent the bypass of hard water to service during the regeneration cycle.

Media Tanks

The tanks shall be designed for a maximum working pressure of 125 psi and hydrostatically tested at 300 psi. Tanks shall be made of polyethylene and reinforced with a fiberglass wrapping. Each tank shall include a 4.0 in. threaded top opening and a 2.5” x 4.0” tank adapter fitting. Each tank shall be NSF approved. Upper and lower distribution system shall be of a slot design. Distributors will provide even flow of regeneration water and the collection of processed water.

Conditioning Media

Each softener shall include a non-solvent, high capacity cation resin having a minimum exchange capacity of 30,000 grains/ft^3 when regenerated with 15.0 lbs/ft^3. The media shall be solid, of a proper particle size and shall contain no plates, shells, agglomerates or other shapes, which might interfere with the normal function of the water softener.

Brine System

A combination salt storage and brine production tank shall be manufactured of corrosion resistant, plastic. The brine tank shall have a chamber to house the brine valve assembly. The brine float assembly shall allow for adjustable salt settings and shall provide for a shut-off to the brine refill. The brine tank shall include a safety overflow connection to be plumbed to a suitable drain.

Section
6

DILUTION PANEL

Ball Valve 12mm (HV-J480C)

Check Valve, 12mm (CV-J480B)

Ball Valve, 40mm (HV-J002H, HV-J481C)

Check Valve, 12mm (CV-J481B)

Diaphragm Valve, 12mm (DV-J480)

Rotameter, 40mm (FL-J002

Rotameter, 12mm (FL-J481A)

Eductor, 40mm (EJ-J480A)

REV	DATE	DESCRIPTION	DRAWN BY	CHECKED BY	APPROVED BY
1	12/27/05	ISSUED FOR APPROVAL	CM	JPM	KP
2	4/4/06	REMOVED 5500-435, 5500-265, 5800-500, ADDED 590-012, 5600-942, 590-288,	JB		
3	07/10/06	590-012 CHANGED FOR 5600-197 AND #17 CORRECTED TO 5800-463	DDK	JPM	
4	10/20/06	ADDED EQUIPMENT TAG PER ENGINEER'S COMMENT	CM	JPM	

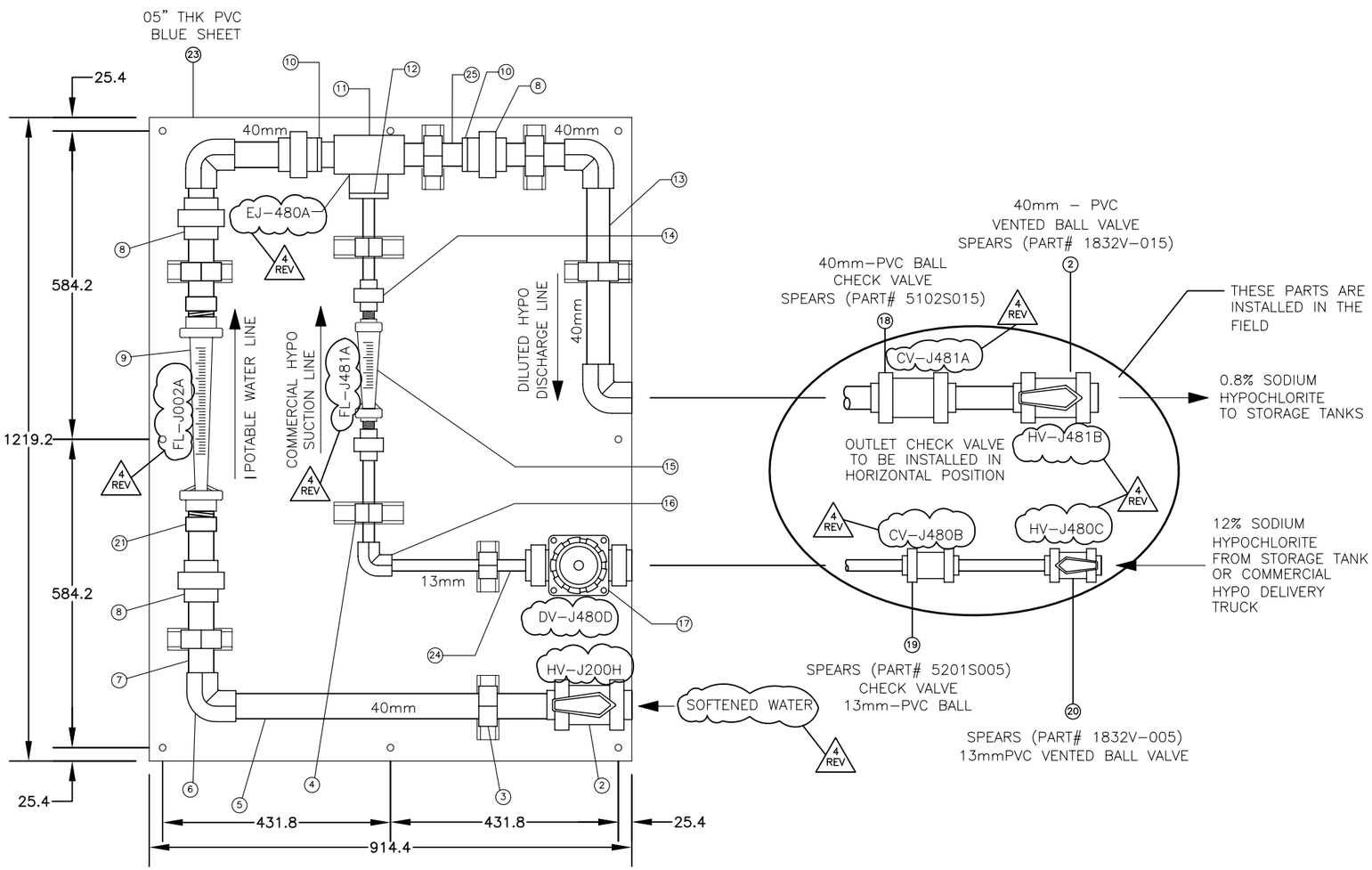

COMMERCIAL HYPOCHLORITE
DILUTION PANEL ASSEMBLY
SCALE: 1 : 10

BILL OF MATERIALS

ITEM	QTY	DESCRIPTION	CLORTEC P/N
1	1	COMMERCIAL HYPO DILUTION PANEL ASSEMBLY (960 GPH)	1015-002
2	2	1-1/2" BALL VALVE, PVC SCH. 80/VITON	5500-438
3	6	1-1/2" PIPE CLAMP	5800-258
4	2	1/2" PIPE CLAMP	5800-317
5	2	PIPE 1-1/2" X 25-3/4", PVC SCH 80	6400-052
6	4	1-1/2" ELBOW 90, SOC X SOC	5900-011
7	6	PIPE 1-1/2" X 7", PVC SCH 80	6400-052
8	4	1-1/2" UNION, SOC, PVC SCH 80	5900-039
9	1	1-1/2" ROTAMETER, W/ HASTELLOY C FLOAT (2.0-20.0 GPM)	8000-021C
10	2	BUSHING, REDUCER, 1-1/2" SPG X 1" SOC	5900-197
11	1	1-1/4" EDUCTOR	5500-442
12	1	BUSHING, REDUCER, 1-1/4" SPIG X 1/2" SOC	5600-942
13	1	PIPE 1-1/2" X 15-1/2", PVC SCH 80	6400-052
14	2	UNION, 1/2" SOC X 1/2" THD, PVC, SCH 80, VITON SEAL	5900-288
15	1	1/2" ROTAMETER, W/ HASTELLOY C FLOAT (0.2-2.0 GPM)	5500-439
16	1	1/2" ELBOW 90°, SOC, PVC SCH. 80	5800-015
17	1	1/2" DIAPHRAM VALVE, PVC SCH. 80	5800-463
18	1	1-1/2" CHECK VALVE, PVC SCH. 80	5500-102
19	1	1/2" CHECK VALVE, PVC SCH. 80	8000-014
20	1	1/2" BALL VALVE, PVC SCH. 80/VITON	5500-437
21	2	1-1/2" ADAPTER SOC X THD, PVC SCH 80	5500-440
22	8	1-5/8" X 1-5/8" X 5" UNISTRUT, FIBERGLASS	5903-202
23	1	36" X 48" BLUE SHEET, 0.5" PVC	5902-020
24	3	PIPE 1/2" X 11", PVC SCH 80	6400-049
25	1	PIPE 1-1/4" X 7", PVC SCH 80	6400-047

NOTES:

1. ALL PIPING, FITTINGS AND VALVES ARE PVC SCH. 80.
2. DILUTION RATIO SHOULD BE 15:1.
3. ALL DIMENSIONS ARE IN MM
4. DRY WEIGHT : 30 Kgs.

SEVERN TRENT SERVICES
CLORTEC
2660 COLUMBIA STREET TORRANCE, CALIFORNIA 90503
TELEPHONE No: (310) 618-9700 E-MAIL:
FAX No: (310) 618-1384 WEB SITE: www.severntrentservices.com

UNLESS OTHERWISE NOTED
TOLERANCES:

TYPE:	INCHES	[MM]
FRACTIONS	± 1/8"	
.X	± .1"	± 2.5
.XX	± .02"	± .51
.XXX	± .005"	± .127
ANGLES	± 1°	

NOTICE OF CONFIDENTIALITY
THIS DOCUMENT CONTAINS PROPRIETARY INFORMATION THAT IS AND SHALL REMAIN THE PROPERTY OF CLORTEC AND IS TO BE RETURNED IMMEDIATELY UPON REQUEST. ITS CONTENTS MAY NOT BE REPRODUCED, DISTRIBUTED, CIRCULATED, OR DISCLOSED TO THIRD PARTIES. RECIPIENT WILL NOT USE THIS INFORMATION FOR PURPOSES OTHER THAN INTENDED WITHOUT PRIOR WRITTEN CONSENT OF CLORTEC.

BULK HYPOCHLORITE
DILUTION PANEL DETAIL
915mm W X 1219mmH

SCALE:	CLORTEC JOB No:	SIZE:	REV:
NTS		B	4
DWG No: 1015-002		SHEET: 1 OF 1	

NEW PRODUCTS

V-1A-1001
Effective: June 9, 2001

PVC/CPVC True Union 2000 Vented Ball Valves

- Designed For Sodium Hypochlorite (Bleach) and other Chemical Applications
- Vented Ball Equalizes Internal Fluid Pressures
- Assures Proper Valve Operation and Long Life
- Features Built-in Locking Handle, Double O-ring Stem Seal, Spears Safe-T-Shear™ Stem, and Safe-T-Blocked™ Seal Carrier for Extra Protection
- EPDM or genuine Viton® O-ring Seals
- 235 psi maximum internal pressure at 73°F
- Available in IPS sizes 1/2" through 4" with choice of either Socket or Spears Patented Stainless Steel Reinforced (SR) Plastic Threaded End Connectors. Flanged End Connectors available by request.

Normal ball valve operation can entrap chemicals such as Sodium Hypochlorite (bleach) solutions in the internal body cavity. Under certain conditions such entrapped fluids can form caustic crystalline residues and pressure build up from gases developed. These can both impair proper operation and potentially damage valve components. Spears True Union 2000 Vented Ball Valve relieves pressure build up from internal fluid entrapment. A 1/8" vent hole in the ball equalizes internal fluid pressure and maintains a wetted surface to prevent residue crystallization. Simply install valve with ball vent on the pressure (upstream) side when in closed position.

PVC True Union 2000 Industrial Vented Ball Valves

Material	EPDM				VITON®				Disc Code
Joint	Socket Ends		SR Threaded Ends		Socket Ends		SR Threaded Ends		
Size	Part#	Price Each	Part#	Price Each	Part#	Price Each	Part#	Price Each	
1/2	1822V-005		1821V-005SR		1832V-005		1831V-005SR		600
3/4	1822V-007		1821V-007SR		1832V-007		1831V-007SR		600
1	1822V-010		1821V-010SR		1832V-010		1831V-010SR		600
1-1/4	1822V-012		1821V-012SR		1832V-012		1831V-012SR		600
1-1/2	1822V-015		1821V-015SR		1832V-015		1831V-015SR		600
2	1822V-020		1821V-020SR		1832V-020		1831V-020SR		600
2-1/2	1822V-025		1821V-025SR		1832V-025		1831V-025SR		601
3	1822V-030		1821V-030SR		1832V-030		1831V-030SR		601
4	1822V-040		1821V-040SR		1832V-040		1831V-040SR		601

CPVC True Union 2000 Industrial Vented Ball Valves

Material	EPDM				VITON®				Disc Code
Joint	Socket Ends		SR Threaded Ends		Socket Ends		SR Threaded Ends		
Size	Part#	Price Each	Part#	Price Each	Part#	Price Each	Part#	Price Each	
1/2	1822V-005C		1821V-005CSR		1832V-005C		1831V-005CSR		602
3/4	1822V-007C		1821V-007CSR		1832V-007C		1831V-007CSR		602
1	1822V-010C		1821V-010CSR		1832V-010C		1831V-010CSR		602
1-1/4	1822V-012C		1821V-012CSR		1832V-012C		1831V-012CSR		602
1-1/2	1822V-015C		1821V-015CSR		1832V-015C		1831V-015CSR		602
2	1822V-020C		1821V-020CSR		1832V-020C		1831V-020CSR		602
2-1/2	1822V-025C		1821V-025CSR		1832V-025C		1831V-025CSR		603
3	1822V-030C		1821V-030CSR		1832V-030C		1831V-030CSR		603
4	1822V-040C		1821V-040CSR		1832V-040C		1831V-040CSR		603

Technical Information

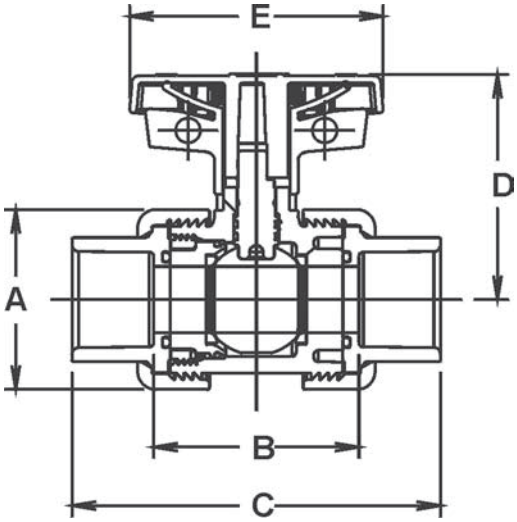

Dimensions, Weights, Operating Torque & CV Values

Size	A	B[1]	C		D	E	Torque Values[2]	CV[3] Values		Approx. Wt. (Lbs.)	
			Socket	Thread				Socket/Thd	Flanged	PVC	CPVC
1/2	1-3/16	2-7/16	4-3/16	3-13/16	2-9/16	2-13/16	12	29	18	.36	.38
3/4	2-1/4	2-3/4	4-3/4	4-1/4	2-7/8	3-5/16	12	63	39	.56	.58
1	2-1/2	2-7/8	5-1/8	4-11/16	3-1/8	3-7/16	20	120	73	.74	.77
1-1/4	3-1/16	3-1/4	5-3/4	5-3/16	3-5/8	3-13/16	25	243	151	1.13	1.19
1-1/2	3-1/2	3-1/2	6-1/4	5-7/16	4	4-3/16	40	357	223	1.54	1.60
2	4-1/4	4-3/4	7-3/4	6-3/4	4-1/2	5-1/8	67	599	395	2.72	2.85
2-1/2	5-3/8	5-7/8	9-5/16	8-1/2	5-1/8	6-1/4	120	856	579	7.42	7.70
3	6-3/16	6-7/8	10-11/16	9-3/4	5-7/8	7-5/8	120	1416	974	7.46	7.81
4	7-1/2	7-1/4	11-13/16	10-1/4	6-3/4	9-3/16	336	2865	1952	12.35	12.48

1: Valve lay length.
2: Torque required at valve maximum internal pressure rating, 5 ft./sec. Flow velocity; due to adjustment differences during installation, actual valves may vary.
3: Gallons per minute at 1 psi pressure drop. Values calculated from valve laying length, based on derivative of Hazen-Williams equation with surface roughness factor of C=150.

NOT FOR USE WITH COMPRESSED AIR OR GAS

Viton® is a registered trademark of DuPont Dow Elastomers.

See Spears Price Schedules V-1 Thermoplastic Valves & Accessories for additional configurations.

SPEARS® MANUFACTURING COMPANY • CORPORATE OFFICE
15853 Olden St., Sylmar, CA 91342 • PO Box 9203, Sylmar, CA 91392
(818) 364-1611 • www.spearsmfg.com

MADE IN THE U.S.A. WITH PRIDE

PACIFIC SOUTHWEST
15860 Olden St.
Sylmar (Los Angeles), CA 91342
(818) 364-1611 • (800) 862-1499
Fax (818) 367-3014

ROCKY MOUNTAIN
4880 Florence St.
Denver, CO 80238
(303) 371-9430 • (800) 777-4154
Fax (303) 375-9546

UTAH
1641 South 700 West
Salt Lake City, UT 84104
(801) 972-0659
Fax (801) 972-0688

SOUTHEAST
4205 Newpoint Pl. Suite 100
Lawrenceville (Atlanta), GA 30043
(678) 985-1263 • (800) 662-6326
Fax (678) 985-5642

MIDWEST
1 Gateway Ct . Suite A
Bolingbrook (Chicago), IL 60440
(630) 759-7529 • (800) 662-6330
Fax (630) 759-7515

NORTHWEST
3902 B St. NW
Auburn (Seattle), WA 98001
(253) 939-4433 • (800) 347-7327
Fax (253) 939-7557

SOUTH CENTRAL
4250 Patriot Dr. Suite 300
Grapevine (Dallas), TX 76051-2317
(972) 691-4003 • (800) 441-1437
Fax (972) 691-4404

NORTHEAST
543 Industrial Dr.
Lewisberry (Harrisburg), PA 17339-9532
(717) 938-8844 • (800) 233-0275
Fax (717) 938-6547

FLORIDA
3445 Bartlett Blvd.
Orlando, FL 32811
(407) 843-1960 • (800) 327-6390
Fax (407) 425-3563

INTERNATIONAL SALES
15853 Olden St.
Sylmar (Los Angeles), CA 91342
(818) 364-1611 • Fax (818) 898-3774
E-mail: export@spearsmfg.com

© Copyright 2001 Spears Manufacturing Company. All Rights Reserved. Printed in the United States of America 10/01.

NEW PRODUCTS

V-1A-1001
Effective: June 9, 2001

PVC/CPVC True Union 2000 Vented Ball Valves

- Designed For Sodium Hypochlorite (Bleach) and other Chemical Applications
- Vented Ball Equalizes Internal Fluid Pressures
- Assures Proper Valve Operation and Long Life
- Features Built-in Locking Handle, Double O-ring Stem Seal, Spears Safe-T-Shear™ Stem, and Safe-T-Blocked™ Seal Carrier for Extra Protection
- EPDM or genuine Viton® O-ring Seals
- 235 psi maximum internal pressure at 73°F
- Available in IPS sizes 1/2" through 4" with choice of either Socket or Spears Patented Stainless Steel Reinforced (SR) Plastic Threaded End Connectors. Flanged End Connectors available by request.

Normal ball valve operation can entrap chemicals such as Sodium Hypochlorite (bleach) solutions in the internal body cavity. Under certain conditions such entrapped fluids can form caustic crystalline residues and pressure build up from gases developed. These can both impair proper operation and potentially damage valve components. Spears True Union 2000 Vented Ball Valve relieves pressure build up from internal fluid entrapment. A 1/8" vent hole in the ball equalizes internal fluid pressure and maintains a wetted surface to prevent residue crystallization. Simply install valve with ball vent on the pressure (upstream) side when in closed position.

PVC True Union 2000 Industrial Vented Ball Valves

Material	EPDM				VITON®				Disc Code
Joint	Socket Ends		SR Threaded Ends		Socket Ends		SR Threaded Ends		
Size	Part#	Price Each	Part#	Price Each	Part#	Price Each	Part#	Price Each	
1/2	1822V-005		1821V-005SR		1832V-005		1831V-005SR		600
3/4	1822V-007		1821V-007SR		1832V-007		1831V-007SR		600
1	1822V-010		1821V-010SR		1832V-010		1831V-010SR		600
1-1/4	1822V-012		1821V-012SR		1832V-012		1831V-012SR		600
1-1/2	1822V-015		1821V-015SR		1832V-015		1831V-015SR		600
2	1822V-020		1821V-020SR		1832V-020		1831V-020SR		600
2-1/2	1822V-025		1821V-025SR		1832V-025		1831V-025SR		601
3	1822V-030		1821V-030SR		1832V-030		1831V-030SR		601
4	1822V-040		1821V-040SR		1832V-040		1831V-040SR		601

CPVC True Union 2000 Industrial Vented Ball Valves

Material	EPDM				VITON®				Disc Code
Joint	Socket Ends		SR Threaded Ends		Socket Ends		SR Threaded Ends		
Size	Part#	Price Each	Part#	Price Each	Part#	Price Each	Part#	Price Each	
1/2	1822V-005C		1821V-005CSR		1832V-005C		1831V-005CSR		602
3/4	1822V-007C		1821V-007CSR		1832V-007C		1831V-007CSR		602
1	1822V-010C		1821V-010CSR		1832V-010C		1831V-010CSR		602
1-1/4	1822V-012C		1821V-012CSR		1832V-012C		1831V-012CSR		602
1-1/2	1822V-015C		1821V-015CSR		1832V-015C		1831V-015CSR		602
2	1822V-020C		1821V-020CSR		1832V-020C		1831V-020CSR		602
2-1/2	1822V-025C		1821V-025CSR		1832V-025C		1831V-025CSR		603
3	1822V-030C		1821V-030CSR		1832V-030C		1831V-030CSR		603
4	1822V-040C		1821V-040CSR		1832V-040C		1831V-040CSR		603

Technical Information

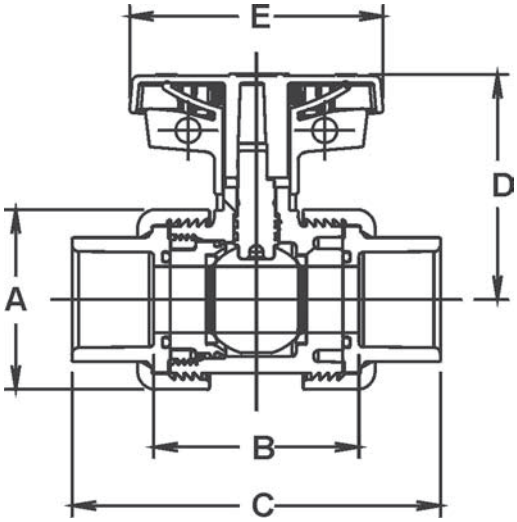

Dimensions, Weights, Operating Torque & CV Values

Size	A	B[1]	C		D	E	Torque Values[2]	CV[3] Values		Approx. Wt. (Lbs.)	
			Socket	Thread				Socket/Thd	Flanged	PVC	CPVC
1/2	1-3/16	2-7/16	4-3/16	3-13/16	2-9/16	2-13/16	12	29	18	.36	.38
3/4	2-1/4	2-3/4	4-3/4	4-1/4	2-7/8	3-5/16	12	63	39	.56	.58
1	2-1/2	2-7/8	5-1/8	4-11/16	3-1/8	3-7/16	20	120	73	.74	.77
1-1/4	3-1/16	3-1/4	5-3/4	5-3/16	3-5/8	3-13/16	25	243	151	1.13	1.19
1-1/2	3-1/2	3-1/2	6-1/4	5-7/16	4	4-3/16	40	357	223	1.54	1.60
2	4-1/4	4-3/4	7-3/4	6-3/4	4-1/2	5-1/8	67	599	395	2.72	2.85
2-1/2	5-3/8	5-7/8	9-5/16	8-1/2	5-1/8	6-1/4	120	856	579	7.42	7.70
3	6-3/16	6-7/8	10-11/16	9-3/4	5-7/8	7-5/8	120	1416	974	7.46	7.81
4	7-1/2	7-1/4	11-13/16	10-1/4	6-3/4	9-3/16	336	2865	1952	12.35	12.48

May 11, 2006

1: Valve lay length.
2: Torque required at valve maximum internal pressure rating, 5 ft./sec. Flow velocity; due to adjustment differences during installation, actual valves may vary.
3: Gallons per minute at 1 psi pressure drop. Values calculated from valve laying length, based on derivative of Hazen-Williams equation with surface roughness factor of C=150.

NOT FOR USE WITH COMPRESSED AIR OR GAS

Viton® is a registered trademark of DuPont Dow Elastomers.

See Spears Price Schedules V-1 Thermoplastic Valves & Accessories for additional configurations.

SPEARS® MANUFACTURING COMPANY • CORPORATE OFFICE
15853 Olden St., Sylmar, CA 91342 • PO Box 9203, Sylmar, CA 91392
(818) 364-1611 • www.spearsmfg.com

MADE IN THE U.S.A. WITH PRIDE

PACIFIC SOUTHWEST
15860 Olden St.
Sylmar (Los Angeles), CA 91342
(818) 364-1611 • (800) 862-1499
Fax (818) 367-3014

ROCKY MOUNTAIN
4880 Florence St.
Denver, CO 80238
(303) 371-9430 • (800) 777-4154
Fax (303) 375-9546

UTAH
1641 South 700 West
Salt Lake City, UT 84104
(801) 972-0659
Fax (801) 972-0688

SOUTHEAST
4205 Newpoint Pl. Suite 100
Lawrenceville (Atlanta), GA 30043
(678) 985-1263 • (800) 662-6326
Fax (678) 985-5642

MIDWEST
1 Gateway Ct . Suite A
Bolingbrook (Chicago), IL 60440
(630) 759-7529 • (800) 662-6330
Fax (630) 759-7515

NORTHWEST
3902 B St. NW
Auburn (Seattle), WA 98001
(253) 939-4433 • (800) 347-7327
Fax (253) 939-7557

SOUTH CENTRAL
4250 Patriot Dr. Suite 300
Grapevine (Dallas), TX 76051-2317
(972) 691-4003 • (800) 441-1437
Fax (972) 691-4404

NORTHEAST
543 Industrial Dr.
Lewisberry (Harrisburg), PA 17339-9532
(717) 938-8844 • (800) 233-0275
Fax (717) 938-6547

FLORIDA
3445 Bartlett Blvd.
Orlando, FL 32811
(407) 843-1960 • (800) 327-6390
Fax (407) 425-3563

INTERNATIONAL SALES
15853 Olden St.
Sylmar (Los Angeles), CA 91342
(818) 364-1611 • Fax (818) 898-3774
E-mail: export@spearsmfg.com

67
Aug.02, 2006

© Copyright 2001 Spears Manufacturing Company. All Rights Reserved. Printed in the United States of America 10/01.

PVC & CPVC TRUE UNION BALL CHECK VALVES

CK-2-0200

Engineered and Flow Tested for Superior Performance

Designed for quick, positive seal off with minimum turbulence, low restriction and maximum fluid transfer, this industrial grade ball check valve is used in a wide variety of industrial and chemical processing applications. Suitable for horizontal or vertical installation. Available in IPS sizes 1/2" through 4" with choice of either socket, threaded or flanged end connectors, and 6" (venturied 4" valve) with choice of either socket or flanged end connectors. Also available in metric socket sizes 20 mm through 110 mm, and 1/2" through 4" BSP Threads.

Engineered Flow Design

Spears computer engineered design provides superior fluid flow with minimum turbulence. Eliminates "chatter" often encountered in ball check valves.

Heavy Bodied PVC or CPVC Construction

Spears computer engineered True Union Ball Check Valves never rust, scale or pit, providing exceptional chemical and corrosion resistance.

Buttress Threaded Double Union Nuts

Strong buttress type threads on union nuts allow higher pressure handling capability and quick in-line installation and servicing.

NSF Certified for Potable Water

All True Union Ball Check Valves are NSF Certified for potable water use.

Full 235 psi Pressure Rating

Maximum Internal Pressure at 73°F for the most demanding applications of 1/2" - 2" valves, 150 psi for 2-1/2" - 6" valves.

Fully Repairable

Convenient O-ring Replacement Kits or Full Cartridge Replacement Kits for easy ordering, servicing and extended valve life.

EPDM or Viton® O-ring Options

Choice of high grade, abrasion resistant EPDM or Viton® elastomer O-rings allows application specific selection for optimum chemical resistance.

Ball Check Foot Valves

Spears True Union Ball Check Valves easily convert to Foot Valves utilizing optional Foot Valve Screen Adapters.

For additional information, please refer to Spears THERMOPLASTIC VALVES & ACCESSORIES PRODUCT GUIDE & ENGINEERING SPECIFICATIONS V-4 and THERMOPLASTIC VALVES & ACCESSORIES Price Schedule V-1.

MADE IN THE U.S.A. WITH PRIDE

LPCB LOSS PREVENTION CERTIFICATION BOARD — NATIONAL ACCREDITATION OF CERTIFICATION BODIES

Quality Systems Certificate No. 293
Corporate Facilities, Sylmar, CA
Assessed to ISO 9001

Sample Engineering Specifications

All thermoplastic check valves shall be True Union Ball type constructed from PVC Type I Cell Classification 12454 or CPVC Type IV Cell Classification 23447. All O-rings shall be EPDM or Viton®. All valve union nuts shall have Buttress threads. All valve components shall be replaceable. All valves shall be certified for potable water use by the National Sanitation Foundation (NSF). All 1/2" through 2" valves shall be pressure rated at 235 psi and all 2-1/2" through 4" valves shall be pressure rated at 150 psi for water at 73°F, as manufactured by Spears Manufacturing Company.

Viton® is a Registered Trademark of Dupont Dow Elastomers.

Quick-View Valve Selection Chart

Valve Size	O-Ring Material	PVC Part Number[1] Threaded	Socket	Flanged	Pressure Rating
1/2	EPDM	2229-005	included	2223-005	235 psi Non-Shock Water @ 73°F (Flanged 150 psi Non-Shock Water @ 73°F)
	Viton®	2239-005	included	2233-005	
3/4	EPDM	2229-007	included	2223-007	
	Viton®	2239-007	included	2233-007	
1	EPDM	2229-010	included	2223-010	
	Viton®	2239-010	included	2233-010	
1-1/4	EPDM	2229-012	included	2223-012	
	Viton®	2239-012	included	2233-012	
1-1/2	EPDM	2229-015	included	2223-015	
	Viton®	2239-015	included	2233-015	
2	EPDM	2229-020	included	2223-020	
	Viton®	2239-020	included	2233-020	
2-1/2	EPDM	2221-025	2222-025	2223-025	150 psi Non-Shock Water @ 73°F
	Viton®	2231-025	2232-025	2233-025	
3	EPDM	2221-030	2222-030	2223-030	
	Viton®	2231-030	2232-030	2233-030	
4	EPDM	2221-040	2222-040	2223-040	
	Viton®	2231-040	2232-040	2233-040	
6 venturied	EPDM	N/A	2222-060	2223-060	
	Viton®	N/A	2232-060	2233-060	

1: For CPVC valves, add the letter "C" to part numbers listed (e.g., 2239-005C). Viton® O-rings are standard on CPVC Valves. **Flanged and custom end connections available upon request.**

C_v Values

Nominal Size	C_v Threaded & Socket	C_v Flanged	Horizontal Closing Feet of Head (water)	Horizontal Closing GPM (minimum)
1/2	11	10	1.6	.10
3/4	18	17	1.6	.10
1	32	30	1.6	.25
1-1/4	58	55	1.6	.40
1-1/2	94	89	1.6	.75
2	153	146	1.6	.75
2-1/2	159	155	1.0	1.50
3	378	361	1.0	4.00
4	551	537	1.0	5.50

Values based on independent testing by California State Polytechnic University. Flanged values calculated for additional laying length of flanged valve. Cv Values for 6" venturied flange and socket valves are not available.

NOT FOR USE WITH COMPRESSED AIR OR GASES

Spears Manufacturing Company DOES NOT RECOMMEND the use of thermoplastic piping products for systems to transport or store compressed air or gases, or the testing of thermoplastic piping systems with compressed air or gases in above and below ground locations. The use of our product in compressed air or gas systems automatically voids any warranty for such products, and its use against our recommendation is entirely the responsibility and liability of the installer.

WARNING: DO NOT USE COMPRESSED AIR OR GAS TO TEST ANY PVC OR CPVC THERMOPLASTIC PIPING PRODUCT OR SYSTEM, AND DO NOT USE DEVICES PROPELLED BY COMPRESSED AIR OR GAS TO CLEAR SYSTEMS. THESE PRACTICES MAY RESULT IN EXPLOSIVE FRAGMENTATION OF SYSTEM PIPING COMPONENTS CAUSING SERIOUS OR FATAL BODILY INJURY.

CAUTION: CHECK VALVES SHOULD BE INSTALLED A MINIMUM OF 10 PIPE DIAMETERS FROM A PUMP OR OTHER SOURCES OF TURBULENCE.

Temperature Pressure Rating

System Operating Temperature °F (°C)			100 (38)	110 (43)	120 (49)	130 (54)	140 (60)	150 (66)	160 (71)	170 (77)	180 (82)	190 (88)	200 (93)	210 (99)
Valve Pressure Rating psi (MPa)	1/2" - 2"	PVC	235 (1.62)	211 (1.45)	150 (1.03)	75 (.52)	50 (.34)	-0- (-0-)	-0- (-0-)	-0- (-0-)	-0- (-0-)	-0- (-0-)	-0- (-0-)	-0- (-0-)
		CPVC	235 (1.62)	219 (1.51)	170 (1.17)	145 (1.00)	130 (.90)	110 (.76)	90 (.62)	80 (.55)	70 (.48)	60 (.41)	50 (.34)	-0- (-0-)
	2-1/2" - 4"	PVC	150 (1.03)	135 (.93)	110 (.76)	75 (.52)	50 (.34)	-0- (-0-)	-0- (-0-)	-0- (-0-)	-0- (-0-)	-0- (-0-)	-0- (-0-)	-0- (-0-)
		CPVC	150 (1.03)	140 (.97)	130 (.90)	120 (.83)	110 (.76)	100 (.70)	90 (.62)	80 (.55)	70 (.48)	60 (.41)	50 (.34)	-0- (-0-)

SPEARS® MANUFACTURING COMPANY

CORPORATE OFFICES
15853 Olden Street, Sylmar, CA 91342
P.O. Box 9203, Sylmar, CA 91392
(818) 364-1611 • http://www.spearsmfg.com

PACIFIC SOUTHWEST
15860 Olden Street
Sylmar (Los Angeles), CA 91342
P.O. Box 9203, Sylmar, CA 91392
(818) 364-1611
(800) 862-1499
FAX: (818) 367-3014

NORTHWEST
3902 "B" Street N.W.
Auburn (Seattle), WA
98001
(253) 939-4433
(800) 347-7327
FAX: (253) 939-7557

ROCKY MOUNTAIN
4880 Florence Street
Denver, CO
80238
(303) 371-9430
(800) 777-4154
FAX: (303) 375-9546

SOUTH CENTRAL
1838 Forms Drive
Carrollton (Dallas), TX
75006
(972) 245-0387
(800) 441-1437
FAX: (972) 245-4205

UTAH
1415 South 700 West #3
Salt Lake City, UT
84104
(801) 972-0659
FAX: (801) 972-0688

NORTHEAST
543 Industrial Drive
Lewisberry (Harrisburg), PA
17339-9532
(717) 938-8844
(800) 233-0275
FAX: (717) 938-6547

SOUTHEAST
2751 Miller Road
Decatur (Atlanta), GA
30035
(770) 981-7122
(800) 662-6326
FAX: (770) 981-6106

FLORIDA
3445 Bartlett Boulevard
Orlando, FL
32811
(407) 843-1960
(800) 327-6390
FAX: (407) 425-3563

MIDWEST
854 Fairway Drive
Bensenville (Chicago), IL
60106
(630) 773-0075
(800) 662-6330
FAX: (630) 773-0435

INTERNATIONAL SALES
15853 Olden Street
Sylmar (Los Angeles), CA 91342
P.O. Box 9203
Sylmar, CA 91392
(818) 364-1611
FAX: (818) 898-3774
E-mail: export@spearsmfg.com

© Copyright 2000 Spears Manufacturing Company. All Rights Reserved. Printed in the United States of America 2/00. CK-2-0200

PVC & CPVC TRUE UNION BALL CHECK VALVES

CK-2-0200

Engineered and Flow Tested for Superior Performance

Designed for quick, positive seal off with minimum turbulence, low restriction and maximum fluid transfer, this industrial grade ball check valve is used in a wide variety of industrial and chemical processing applications. Suitable for horizontal or vertical installation. Available in IPS sizes 1/2" through 4" with choice of either socket, threaded or flanged end connectors, and 6" (venturied 4" valve) with choice of either socket or flanged end connectors. Also available in metric socket sizes 20 mm through 110 mm, and 1/2" through 4" BSP Threads.

Engineered Flow Design

Spears computer engineered design provides superior fluid flow with minimum turbulence. Eliminates "chatter" often encountered in ball check valves.

Heavy Bodied PVC or CPVC Construction

Spears computer engineered True Union Ball Check Valves never rust, scale or pit, providing exceptional chemical and corrosion resistance.

Buttress Threaded Double Union Nuts

Strong buttress type threads on union nuts allow higher pressure handling capability and quick in-line installation and servicing.

NSF Certified for Potable Water

All True Union Ball Check Valves are NSF Certified for potable water use.

Full 235 psi Pressure Rating

Maximum Internal Pressure at 73°F for the most demanding applications of 1/2" - 2" valves, 150 psi for 2-1/2" - 6" valves.

Fully Repairable

Convenient O-ring Replacement Kits or Full Cartridge Replacement Kits for easy ordering, servicing and extended valve life.

EPDM or Viton® O-ring Options

Choice of high grade, abrasion resistant EPDM or Viton® elastomer O-rings allows application specific selection for optimum chemical resistance.

Ball Check Foot Valves

Spears True Union Ball Check Valves easily convert to Foot Valves utilizing optional Foot Valve Screen Adapters.

For additional information, please refer to Spears THERMOPLASTIC VALVES & ACCESSORIES PRODUCT GUIDE & ENGINEERING SPECIFICATIONS V-4 and THERMOPLASTIC VALVES & ACCESSORIES Price Schedule V-1.

MADE IN THE U.S.A. WITH PRIDE

LPCB LOSS PREVENTION CERTIFICATION BOARD — NATIONAL ACCREDITATION OF CERTIFICATION BODIES

Quality Systems Certificate No. 293
Corporate Facilities, Sylmar, CA
Assessed to ISO 9001

Sample Engineering Specifications

All thermoplastic check valves shall be True Union Ball type constructed from PVC Type I Cell Classification 12454 or CPVC Type IV Cell Classification 23447. All O-rings shall be EPDM or Viton®. All valve union nuts shall have Buttress threads. All valve components shall be replaceable. All valves shall be certified for potable water use by the National Sanitation Foundation (NSF). All 1/2" through 2" valves shall be pressure rated at 235 psi and all 2-1/2" through 4" valves shall be pressure rated at 150 psi for water at 73°F, as manufactured by Spears Manufacturing Company.

Viton® is a Registered Trademark of Dupont Dow Elastomers.

Quick-View Valve Selection Chart

Valve Size	O-Ring Material	PVC Part Number[1] Threaded	Socket	Flanged	Pressure Rating
1/2	EPDM	2229-005	included	2223-005	235 psi Non-Shock Water @ 73°F (Flanged 150 psi Non-Shock Water @ 73°F)
	Viton®	2239-005	included	2233-005	
3/4	EPDM	2229-007	included	2223-007	
	Viton®	2239-007	included	2233-007	
1	EPDM	2229-010	included	2223-010	
	Viton®	2239-010	included	2233-010	
1-1/4	EPDM	2229-012	included	2223-012	
	Viton®	2239-012	included	2233-012	
1-1/2	EPDM	2229-015	included	2223-015	
	Viton®	2239-015	included	2233-015	
2	EPDM	2229-020	included	2223-020	
	Viton®	2239-020	included	2233-020	
2-1/2	EPDM	2221-025	2222-025	2223-025	150 psi Non-Shock Water @ 73°F
	Viton®	2231-025	2232-025	2233-025	
3	EPDM	2221-030	2222-030	2223-030	
	Viton®	2231-030	2232-030	2233-030	
4	EPDM	2221-040	2222-040	2223-040	
	Viton®	2231-040	2232-040	2233-040	
6 venturied	EPDM	N/A	2222-060	2223-060	
	Viton®	N/A	2232-060	2233-060	

1: For CPVC valves, add the letter "C" to part numbers listed (e.g., 2239-005C). Viton® O-rings are standard on CPVC Valves. **Flanged and custom end connections available upon request.**

C_v Values

Nominal Size	C_v Threaded & Socket	C_v Flanged	Horizontal Closing Feet of Head (water)	Horizontal Closing GPM (minimum)
1/2	11	10	1.6	.10
3/4	18	17	1.6	.10
1	32	30	1.6	.25
1-1/4	58	55	1.6	.40
1-1/2	94	89	1.6	.75
2	153	146	1.6	.75
2-1/2	159	155	1.0	1.50
3	378	361	1.0	4.00
4	551	537	1.0	5.50

Values based on independent testing by California State Polytechnic University. Flanged values calculated for additional laying length of flanged valve. Cv Values for 6" venturied flange and socket valves are not available.

NOT FOR USE WITH COMPRESSED AIR OR GASES

Spears Manufacturing Company DOES NOT RECOMMEND the use of thermoplastic piping products for systems to transport or store compressed air or gases, or the testing of thermoplastic piping systems with compressed air or gases in above and below ground locations. The use of our product in compressed air or gas systems automatically voids any warranty for such products, and its use against our recommendation is entirely the responsibility and liability of the installer.

WARNING: DO NOT USE COMPRESSED AIR OR GAS TO TEST ANY PVC OR CPVC THERMOPLASTIC PIPING PRODUCT OR SYSTEM, AND DO NOT USE DEVICES PROPELLED BY COMPRESSED AIR OR GAS TO CLEAR SYSTEMS. THESE PRACTICES MAY RESULT IN EXPLOSIVE FRAGMENTATION OF SYSTEM PIPING COMPONENTS CAUSING SERIOUS OR FATAL BODILY INJURY.

CAUTION: CHECK VALVES SHOULD BE INSTALLED A MINIMUM OF 10 PIPE DIAMETERS FROM A PUMP OR OTHER SOURCES OF TURBULENCE.

Temperature Pressure Rating

System Operating Temperature °F (°C)			100 (38)	110 (43)	120 (49)	130 (54)	140 (60)	150 (66)	160 (71)	170 (77)	180 (82)	190 (88)	200 (93)	210 (99)
Valve Pressure Rating psi (MPa)	1/2" - 2"	PVC	235 (1.62)	211 (1.45)	150 (1.03)	75 (.52)	50 (.34)	-0- (-0-)	-0- (-0-)	-0- (-0-)	-0- (-0-)	-0- (-0-)	-0- (-0-)	-0- (-0-)
		CPVC	235 (1.62)	219 (1.51)	170 (1.17)	145 (1.00)	130 (.90)	110 (.76)	90 (.62)	80 (.55)	70 (.48)	60 (.41)	50 (.34)	-0- (-0-)
	2-1/2" - 4"	PVC	150 (1.03)	135 (.93)	110 (.76)	75 (.52)	50 (.34)	-0- (-0-)	-0- (-0-)	-0- (-0-)	-0- (-0-)	-0- (-0-)	-0- (-0-)	-0- (-0-)
		CPVC	150 (1.03)	140 (.97)	130 (.90)	120 (.83)	110 (.76)	100 (.70)	90 (.62)	80 (.55)	70 (.48)	60 (.41)	50 (.34)	-0- (-0-)

SPEARS® MANUFACTURING COMPANY

CORPORATE OFFICES
15853 Olden Street, Sylmar, CA 91342
P.O. Box 9203, Sylmar, CA 91392
(818) 364-1611 • http://www.spearsmfg.com

PACIFIC SOUTHWEST
15860 Olden Street
Sylmar (Los Angeles), CA 91342
P.O. Box 9203, Sylmar, CA 91392
(818) 364-1611
(800) 862-1499
FAX: (818) 367-3014

NORTHWEST
3902 "B" Street N.W.
Auburn (Seattle), WA
98001
(253) 939-4433
(800) 347-7327
FAX: (253) 939-7557

ROCKY MOUNTAIN
4880 Florence Street
Denver, CO
80238
(303) 371-9430
(800) 777-4154
FAX: (303) 375-9546

SOUTH CENTRAL
1838 Forms Drive
Carrollton (Dallas), TX
75006
(972) 245-0387
(800) 441-1437
FAX: (972) 245-4205

UTAH
1415 South 700 West #3
Salt Lake City, UT
84104
(801) 972-0659
FAX: (801) 972-0688

NORTHEAST
543 Industrial Drive
Lewisberry (Harrisburg), PA
17339-9532
(717) 938-8844
(800) 233-0275
FAX: (717) 938-6547

SOUTHEAST
2751 Miller Road
Decatur (Atlanta), GA
30035
(770) 981-7122
(800) 662-6326
FAX: (770) 981-6106

FLORIDA
3445 Bartlett Boulevard
Orlando, FL
32811
(407) 843-1960
(800) 327-6390
FAX: (407) 425-3563

MIDWEST
854 Fairway Drive
Bensenville (Chicago), IL
60106
(630) 773-0075
(800) 662-6330
FAX: (630) 773-0435

INTERNATIONAL SALES
15853 Olden Street
Sylmar (Los Angeles), CA 91342
P.O. Box 9203
Sylmar, CA 91392
(818) 364-1611
FAX: (818) 898-3774
E-mail: export@spearsmfg.com

© Copyright 2000 Spears Manufacturing Company. All Rights Reserved. Printed in the United States of America 2/00. CK-2-0200

DIAPHRAGM VALVES

Sample Engineering Specification

All thermoplastic Diaphragm valves shall be Weir-type constructed from PVC Type I, ASTM D 1784 Cell Classification 12454 or CPVC Type IV, ASTM D1784 Cell Classification 23447, or Polypropylene, ASTM D 4101. All diaphragms shall be EPDM, genuine Viton® or PTFE with [EPDM or Viton] bonded backing. All valves shall have built-in position indicator with polypropylene handwheel. All True Union style valve union nuts shall have Buttress threads. All PVC and CPVC 1/2" through 2" valves shall be pressure rated to 235 psi, all 2-1/2" through 4" and all flanged valves shall be pressure rated to 150 psi, all 6" valves shall be pressure rated to 100 psi, and all 8" valves shall be pressure rated to 75 psi for water at 73°F. All Polypropylene valves shall be pressure rated to 150 psi for water at 73°F, as manufactured by Spears Manufacturing Company.

Features – PVC, CPVC, PP

This full-featured valve is engineered to provide accurate throttling control and shutoff for industrial, chemical and water treatment applications. Weir-type design eliminates entrapped fluids in valve and is excellent for handling liquids with suspended solids, viscous fluids and slurries. Available in PVC, CPVC and Glass Filled Polypropylene with a variety of Diaphragm material options. PVC & CPVC 1/2" - 2" valves with Flanged Body, Spigot Body or True Union style Socket & Thread ends or Optional Stainless Steel Reinforced (SR) Threads, and sizes 2-1/2" - 8" with Flanged Body. Polypropylene 1/2" - 2" valves with True Union style Stainless Steel Reinforced (SR) Thread ends and sizes 2-1/2" - 8" with Flanged Body.

- True Union Style with Buttress Thread Union Nuts - Mate with Spears True Union 2000 Ball valves and Schedule 80 Union 2000 Pipe Unions.
- EPDM, genuine Viton®, or Elastomer (EPDM or Viton®) Bonded PTFE Diaphragms.
- PVC & CPVC Sizes 1/2" - 2" Pressure Rated to 235 psi @ 73°F, Sizes 2-1/2" - 4" and all flanged Pressure Rated to 150 psi @ 73°F, 6" Pressure Rated to 100 psi and 8" to 75 psi @ 73°F
- Polypropylene Sizes 1/2" - 4" Pressure rated to 150 psi @ 73°F
- Easy-Grip, High Impact Polypropylene Handwheel
- Built-in, Clear-View Position Indicator
- Stainless Steel External Hardware
- Fully Serviceable, Replaceable Components
- Suitable for Vacuum Service
- Assembled with Silicon-Free Lubricants (no lubricant in media contact area)

Special Options

- Hypalon® (CSM) Diaphragms
- Natural Polypropylene Body
- Stainless Steel Reinforce (SR) Threaded End Connectors (standard on PP)
- Electric or Pneumatic Actuation

PVC & CPVC Diaphragm Valve
Quick-View Selection Chart

Valve Size	O-ring Material	Diaphragm Material	PVC Part Number[1] Socket/ Thread End Connectors	PVC Part Number[1] Spigot Ends	PVC Part Number[1] Flanged Ends	PP Part Number Threaded End Connectors	PP Part Number Flanged Ends	Pressure Rating
1/2	EPDM	EPDM	2729-005	2727-005	2723-005	2721-005PSR		True Union & Spigot Style w / Elastomer Diaphragms 235 psi Non-Shock Water @ 73°F Flanged Style & Valves w / PTFE Diaphragms 150 psi Non-Shock Water @ 73°F
		PTFE[2]	2729T-005	2727T-005	2793T-005	2721T-005PSR		
	Viton®	Viton®	2739-005	2737-005	2733-005	2731-005PSR		
		PTFE[2]	2739T-005	2737T-005	2793T-005	2731T-005PSR		
3/4	EPDM	EPDM	2729-007	2727-007	2723-007	2721-007PSR		
		PTFE[2]	2729T-007	2727T-007	2723T-007	2721T-007PSR		
	Viton®	Viton®	2739-007	2737-007	2733-007	2731-007PSR		
		PTFE[2]	2739T-007	2737T-007	2793T-007	2731T-007PSR		
1	EPDM	EPDM	2729-010	2727-010	2723-010	2721-010PSR		
		PTFE[2]	2729T-010	2727T-010	2793T-010	2721T-010PSR		
	Viton®	Viton®	2739-010	2737-010	2733-010	2731-010PSR		
		PTFE[2]	2739T-010	2737T-010	2793T-010	2731T-010PSR		
1-1/4	EPDM	EPDM	2729-012	2727-012	2723-012	2721-012PSR		
		PTFE[2]	2729T-012	2727T-012	2793T-012	2721T-012PSR		
	Viton®	Viton®	2739-012	2737-012	2733-012	2731-012PSR		
		PTFE[2]	2739T-012	2737T-012	2793T-012	2731T-012PSR		
1-1/2	EPDM	EPDM	2729-015	2727-015	2723-015	2721-015PSR		
		PTFE[2]	2729T-015	2727T-015	2793T-015	2721T-015PSR		
	Viton®	Viton®	2739-015	2737-015	2733-015	2731-015PSR		
		PTFE[2]	2739T-015	2737T-015	2793T-015	2731T-015PSR		
2	EPDM	EPDM	2729-020	2727-020	2723-020	2721-020PSR		
		PTFE[2]	2729T-020	2727T-020	2723T-020	2721T-020PSR		
	Viton®	Viton®	2739-020	2737-020	2733-020	2731-020PSR		
		PTFE[2]	2739T-020	2737T-020	2793T-020	2731T-020PSR		
2-1/2	EPDM	EPDM			2723-025		2723-025P	
		PTFE[2]			2793T-025		2793T-025P	
	Viton®	Viton®			2733-025		2733-025P	
		PTFE[2]			2793T-025		2793T-025P	
3	EPDM	EPDM			2723-030		2723-030P	
		PTFE[2]			2793T-030		2793T-030P	
	Viton®	Viton®			2733-030		2733-030P	
		PTFE[2]			2793T-030		2793T-030P	
4	EPDM	EPDM			2723-040		2723-040P	
		PTFE[2]			2793T-040		2793T-040P	
	Viton®	Viton®			2733-040		2733-040P	
		PTFE[2]			2793T-040		2793T-040P	
6	EPDM	EPDM			2723-060		2723-060P	100 psi Non-Shock Water @ 73°F
		PTFE[2]			2793T-060		2793T-060P	
	Viton®	Viton®			2733-060		2733-060P	
		PTFE[2]			2793T-060		2793T-060P	
8	EPDM	EPDM			2723-080		2723-080P	75 psi Non-Shock Water @ 73°F
		PTFE[2]			2793T-080		2793T-080P	
	Viton®	Viton®			2733-080		2733-080P	
		PTFE[2]			2793T-080		2793T-080P	

1: For CPVC valves, add the letter "C" to part numbers listed (e.g., 2729-005C). Custom end connections available upon request.

2: Elastomer-backed PTFE (standard EPDM backed; special order Viton® backed)

DIAPHRAGM VALVES

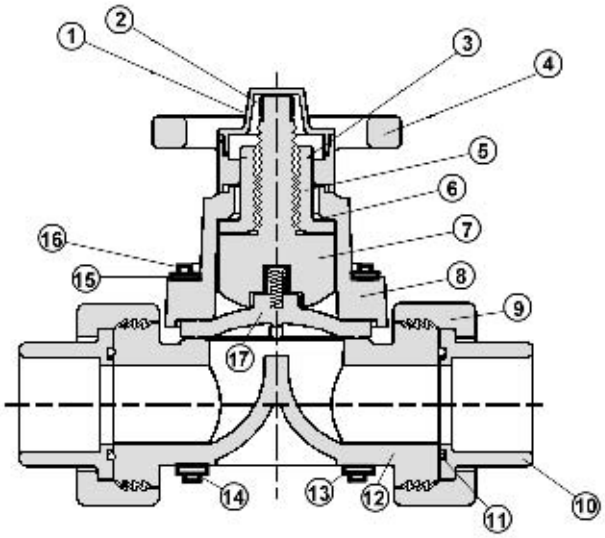

Replacement Parts

No.	Component	Qty.	Material
1	Indicator Cover	1	PVC Clear
2	Indicator	1	PE
3	Retaining Ring	1	SS
4	Handwheel	1	PP
5	Compressor	1	Teflon®CPVC
6	Thrust Washer	1	Teflon®GFPP
7	Compressor	1	CPVC
8	Bonnet	1	GFPP
9	Union Nut[1]	1	PVC/CPVC/GFPP
10	Union End	2	PVC/CPVC/GFPP
11	Union End O-ring[1]	2	EPDM/ Viton®
12	Body[2]	1	PVC/CPVC/GFPP
13	Lock Washer	4 – 16	SS
14	Nut	4 – 16	SS
15	Flat Washer	4 – 16	SS
16	Bolt	4 – 16	SS
17	Diaphragm	1	EPDM/Viton®/PTF

NOTE: 1: Component applicable to True Union style valves only.
2: True Union Socket/Thread illustrated

Temperature Pressure Rating

System Operating °F (°C)			100 (38)	110 (43)	120 (49)	130 (54)	140 (60)	150 (66)	160 (71)	170 (77)	180 (82)	190 (88)	200 (93)	210 (99)
Valve Pressure Rating psi (MPa)	1/2”-2”	PVC	235 (1.62)	211 (1.45)	150 (1.03)	75 (.52)	50 (.34)	-0-	-0-	-0-	-0-	-0-	-0-	-0-
		CPVC	235 (1.62)	219 (1.51)	170 (1.17)	145 (1.00)	130 (.90)	110 (.76)	90 (.62)	80 (.55)	70 (.48)	60 (.41)	50 (.34)	-0-
		PP	150 (1.03)	105 (.72)	90 (.62)	80 (.55)	75 (.52)	65 (.45)	55 (.38)	50 (.34)	45 (.31)	-0-	-0-	-0-
	2-1/2”-4”	PVC	150 (1.03)	135 (.93)	110 (.76)	75 (.52)	50 (.34)	-0-	-0-	-0-	-0-	-0-	-0-	-0-
		CPVC	150 (1.03)	140 (.97)	130 (.90)	120 (.83)	110 (.76)	100 (.70)	90 (.62)	80 (.55)	70 (.48)	60 (.41)	50 (.34)	-0-
		PP	150 (1.03)	105 (.72)	90 (.62)	80 (.55)	75 (.52)	65 (.45)	55 (.38)	50 (.34)	45 (.31)	-0-	-0-	-0-
	6”	PVC	100 (.70)	90 (.62)	80 (.55)	65 (.38)	50 (.34)	-0-	-0-	-0-	-0-	-0-	-0-	-0-
		CPVC	100 (.70)	95 (.66)	90 (.62)	85 (.59)	80 (.55)	75 (.52)	70 (.48)	65 (.45)	60 (.41)	55 (.38)	50 (.34)	-0-
		PP	100 (.70)	90 (.62)	85 (.59)	75 (.52)	70 (.48)	60 (.41)	55 (.38)	50 (.34)	45 (.31)	-0-	-0-	-0-
	8”	PVC	75 (.52)	70 (.48)	65 (.45)	60 (.41)	50 (.34)	-0-	-0-	-0-	-0-	-0-	-0-	-0-
		CPVC	75 (.52)	72 (.49)	70 (.48)	67 (.46)	65 (.45)	62 (.43)	60 (.41)	55 (.38)	50 (.34)	45 (.31)	40	-0-
		PP	75 (.52)	62 (.43)	60 (.41)	57 (.39)	55 (.38)	52 (.36)	50 (.34)	47 (.32)	45 (.31)	-0-	-0-	-0-

NOT FOR USE WITH COMPRESSED AIR OR GASES

C_V Values PVC, CPVC & Polypropylene

Valve Size	PERCENT OPEN			
	100%	75%	50%	25%
1/2	5.1	4.8	4.2	2.4
3/4	8.0	7.5	6.5	3.8
1	11.5	10.8	9.4	5.4
1-1/4	22.0	20.6	18.0	10.3
1-1/2	28.2	26.4	23.0	13.3
2	52.9	49.6	43.2	24.9
2-1/2	119.0	111.5	97.1	55.9
3	119.0	111.5	97.1	55.9
4	189.2	177.3	154.4	88.9
6	402.2	375.8	327.0	187.5
8	328.4	573.2	659.5	700.0

Gallons per minute at 1 psi pressure drop.

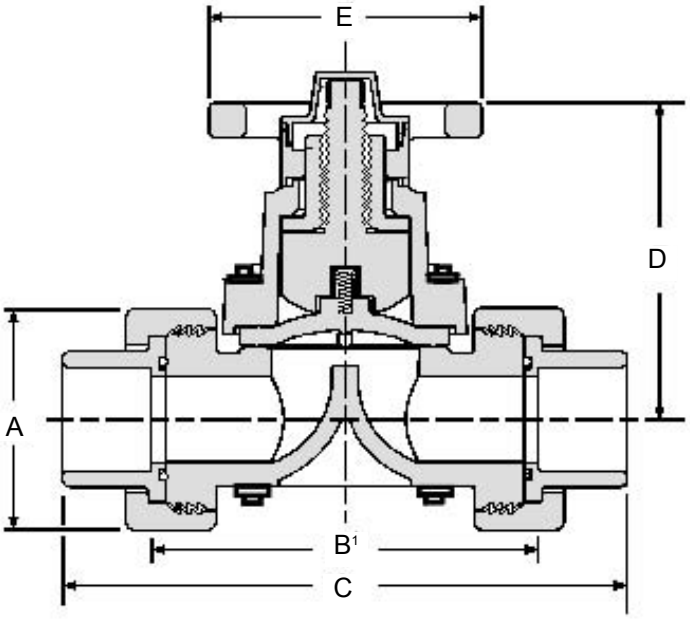

Socket/Thread End Connectors Dimensions & Weights

Nominal Size	Dimension Reference (inches, ± 1/16)					Approx. Wt. (Lbs.)	
	A	B[1]	C	D	E	PVC	CPVC
1/2	1-15/16	3-7/8	5-17/32	3-1/16	2-7/8	1.12	1.14
3/4	2-1/2	4-1/2	6-1/2	3-15/32	3-1/8	1.37	1.36
1	2-9/16	4-15/16	7-1/4	4-3/8	3-3/8	2.35	2.43
1-1/4	3-5/16	5-1/2	8	4-1/8	3-7/8	3.91	4.03
1-1/2	3-17/32	6-5/16	9-1/16	4-15/16	4-5/8	4.08	4.21
2	4-7/32	7-1/2	10-1/2	5-15/16	5-7/8	7.06	7.25

1: Valve Lay Length.

NOT FOR USE WITH COMPRESSED AIR OR GASES

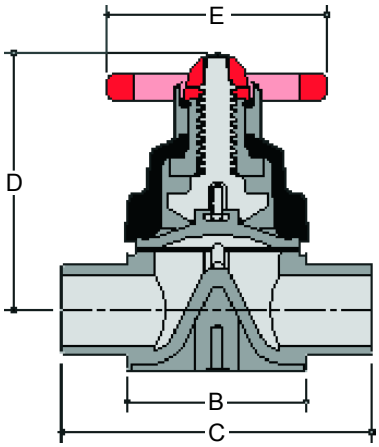

Spigot Diaphragm Dimensions

Nominal Size	Dimension Reference (inches, ± 1/16)				Approx. Wt. (Lbs.)	
	B	C	D	E	PVC	CPVC
1/2	2-5/8	4-3/8	3-11/32	2-7/8	.61	.63
3/4	2-3/4	4-3/4	3-3/4	3-1/4	.79	.82
1	3-1/8	5-3/8	4-7/16	3-5/16	1.32	1.36
1-1/4	3-3/4	6-1/4	5-5/8	4-19/32	2.41	2.50
1-1/2	3-3/4	6-1/2	5-5/8	4-9/32	2.43	2.52
2	4-3/4	7-3/4	7	5-7/8	4.15	4.43

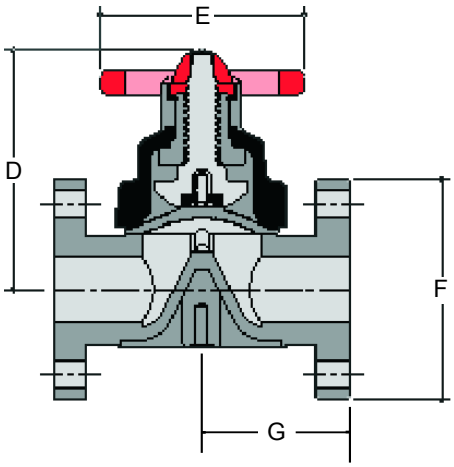

Flanged Diaphragm Dimensions

Nominal Size	Dimension Reference (inches, ± 1/16)				Approx. Wt. (Lbs.)	
	D	E	F	G	PVC	CPVC
1/2	3-11/32	2-7/8	3-1/2	2-5/16	.98	1.02
3/4	3-3/4	3-1/4	3-7/8	2-1/2	1.31	1.37
1	4-7/16	3-5/16	4-1/4	2-13/16	2.00	2.08
1-1/4	5-5/8	4-19/32	4-5/8	3-1/4	3.71	3.76
1-1/2	5-5/8	4-19/32	5	3-3/8	3.88	4.04
2	7	5-7/8	6	4	5.59	5.71
2-1/2	10-1/4	8-7/8	7-1/2	5-19/32	15.75	16.43
3	10-1/4	8-7/8	7-1/2	5-19/32	15.75	16.45
4	12-1/4	10-1/2	9	6-5/8	24.44	25.37
6	16-3/4	18-13/32	11	9-3/8	53.90	N/A
8	21	21-19/32	13-1/2	11-5/32	N/A	N/A

NEW OPTIONS

Blue-White®

F-450N IN-LINE UNIT

F-451 WITH 90° ADAPTERS

F-452 HIGH CAPACITY SERIES

F-451 WITH PROTECTIVE SHIELD

F-440NEA WITH 90° ADAPTERS AND ADJUSTMENT VALVE

Blue-White's High Performance Polysulfone Flowmeters combine Quality Materials of Construction, pride-of-workmanship and over 45 years of manufacturing experience. All backed by excellent customer service.

F-451, F-452, F-450N and F-440 Series Flowmeters have meter body and adapter construction of injection molded Polysulfone. Polysulfone is a highly engineered thermoplastic that is suited to many applications where glass and metal flowmeters are typically used. Blue-White's Polysulfone flowmeters are amber in color and feature a textured surface on the back of the meter body that diffuses ambient light, for easy meter reading.

Blue-White offers many OEM options, including private labeling and packaging. In addition, we are pleased to quote on custom calibrations, alternate materials and styling modifications.

Blue-White®

AUTHORIZED REPRESENTATIVE

5300 BUSINESS DRIVE
HUNTINGTON BEACH, CA 92649 USA

PHONE: 714 / 893-8529
FAX: 714 / 894-9492
E-MAIL: sales@blue-white.com
URL: www.bluwhite.com

80000-252 REV. 6

© BLUE-WHITE 04/03

THE F-451 SERIES

QUALITY and VERSATILITY

High Performance Materials of Construction combine with Functional Styling and Versatility, to make the F-451 Series a terrific value.

The F-451 Series is available with a number of optional design features including protective shields and 90° adapters. In addition, Blue-White's modern machine shop and engineering departments work together to meet special OEM requirements.

F-451 WITH 90° ADAPTERS – For applications requiring a Panel Mount Flowmeter with great accuracy and repeatability, order the F-451 equipped with 1" M/NPT 90° panel mount adapters. Adapters are constructed of injection molded Polysulfone.

F-451 WITH PROTECTIVE SHIELD – The F-451 may be ordered with a Protective Shield constructed of clear, durable Polycarbonate.

F-451 SPECIALLY EQUIPPED – For Harsh Environment installations*, consider the Specially Equipped F-451 Series. In addition to meter body and adapter construction of tough Polysulfone, Specially Equipped meters have float guides of Hastelloy C, and floats of either Hastelloy C or Teflon, depending on calibration.

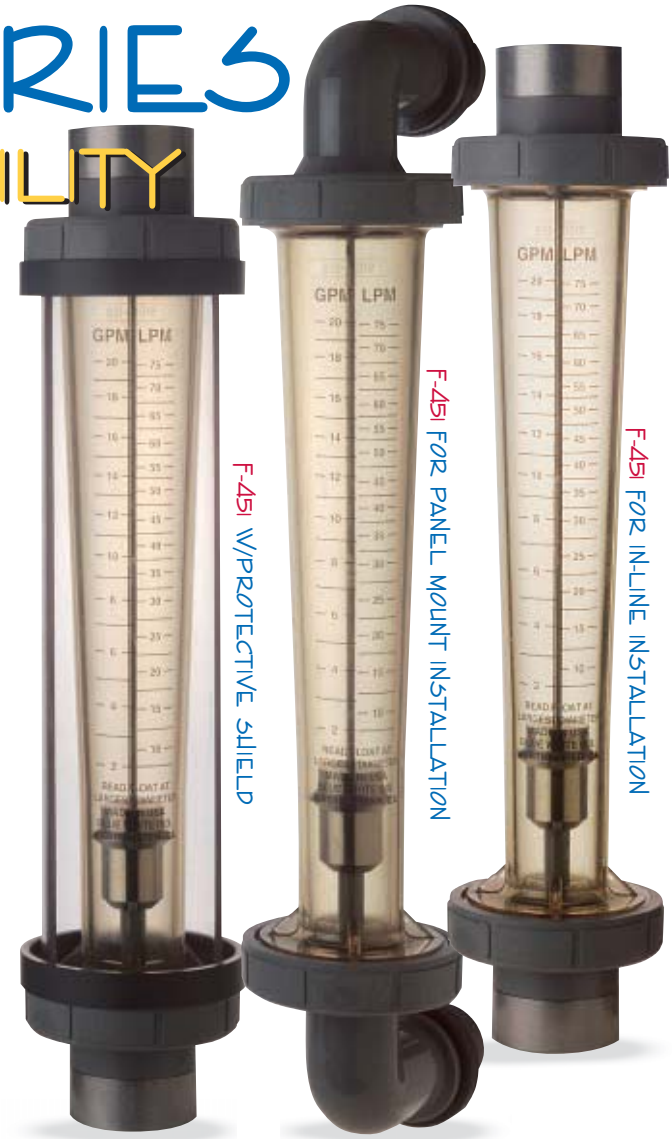

F-451 APPLICATIONS INCLUDE:

- Water & Wastewater Treatment Equipment
- Pollution Treatment & Regulating Equipment
- D.I., R.O. and Ultrapure Water Systems
- Solar Heating
- Chemical Procession
- Filtration Systems
- Chemigation

. . . and many more

F-451 BENEFITS INCLUDE:

- A Heat and Chemical* resistant meter body of injection molded Polysulfone
- Optional Polycarbonate Protective Shield
- Floats are #316 S.S. or Teflon, depending on calibration
- Many calibrations are offered in GPM, LPM and SCFM
- Permanent, easy to read screen printed scales
- 1" F/NPT Polysulfone adapters, or, 1 1/2" PVC adapters (depending on model ordered)
- Viton® o-ring seals
- Accuracy ± 3%
- Optional 90° Adapters

Pressure vs Temperature

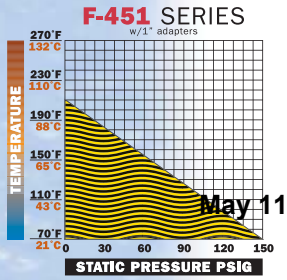

May 11, 2006

DIMENSIONS

STANDARD MODELS
Height: 14 1/2"
Width: 3 3/16"

W/PROTECTIVE SHIELD
Height: 14 1/2"
Width: 3 5/16"

W/90° ADAPTERS
Height: 17"
Centers: 15"

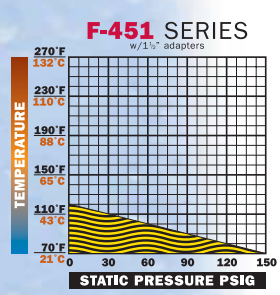

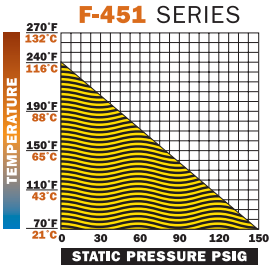

* The factory does not guarantee their flowmeters for use with liquids other than water. Customers are required to do their own compatibility testing. Request Kit #70000-718, at no charge.

Viton® is a registered trademark of DuPont.

ORDERING GUIDELINES

1"F/NPT POLYSULFONE Adapters

MODEL NUMBER	CALIBRATION GPM	CALIBRATION LPM	ADAPTER SIZE
F-451006LHN	0.5 to 6	–	1" F/NPT
F-451001LHN	1.0 to 10	4 to 40	1" F/NPT
F-451002LHN	2.0 to 20	7.5 to 75	1" F/NPT
F-451003LHN	3.0 to 30	12 to 115	1" F/NPT
F-451004LHN	4.0 to 40	15 to 155	1" F/NPT

1 1/2" F/NPT PVC Adapters

MODEL NUMBER	CALIBRATION GPM	CALIBRATION LPM	ADAPTER SIZE
F-451006LHN-24	0.5 to 6	–	1 1/2" F/NPT
F-451001LHN-24	1.0 to 10	4 to 40	1 1/2" F/NPT
F-451002LHN-24	2.0 to 20	7.5 to 75	1 1/2" F/NPT
F-451003LHN-24	3.0 to 30	12 to 115	1 1/2" F/NPT
F-451004LHN-24	4.0 to 40	15 to 155	1 1/2" F/NPT

	CALIBRATION SCFM (AIR)	ADAPTER SIZE
F-451002GHN	8 to 80	1" F/NPT
F-451002GHN-24	8 to 80	1 1/2" F/NPT

MODEL VARIATIONS:

- *LHN = In-Line units (flow through)
- *LHNE = 90° Elbows for Panel Mount Installation (M/NPT all models but the F-451006 F/NPT)
- *LHNC = Units with Polycarbonate Shield
- *LHKN = In-line units specially equipped with Hastelloy C, PVC or Teflon float and guide rod depending on scale range.
- *LHBPN = Units with Brass F/NPT Adapters
- *LHBSN = Units with Brass Sweat Adapters
- *GHN = In-line units calibrated for air

Aug 02, 2006

Blue-White Industries, Ltd.

Technical Data Sheet

F-450N Series Flowmeter & Solarmeter®

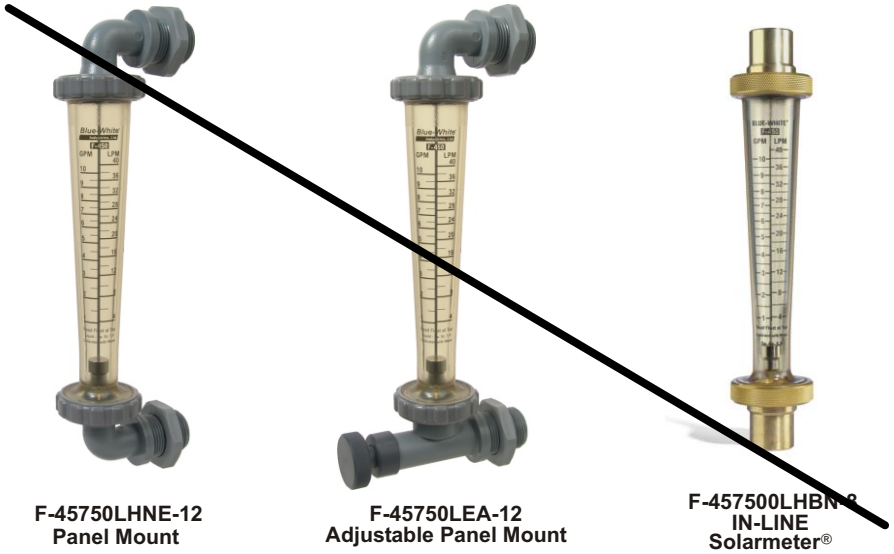

F-45750LHNE-12
Panel Mount

F-45750LEA-12
Adjustable Panel Mount

F-457500LHBN-8
IN-LINE
Solarmeter®

F-450N Features:

- Tough Polysulfone meter body resists high temperatures and pressures.
- 4" approximate scale length for easy reading.
- Direct reading permanent scale.
- In-line or Panel mount configurations available.
- SolarMeters® available with brass connections.
- Optional integral flow adjustment valve.
- Standard models #316 stainless steel guide rods. (Optional K-series Hastelloy C-276).
- Standard models #316 stainless steel or Teflon float. (Optional K-series Hastelloy C-276 or Teflon).
- Not recommended for direct sunlight.
- Available OEM options: Private labeling, custom calibrations, custom materials.

F-450N Specifications:

Max. Working Pressure: ... 150 psig (10.3 bar) @ 70° F (21° C)
Max. Fluid Temperature: ... 212° F (100° C) @ 0 PSI
Models with PVC Float: . 130° F (54° C) @ 0 PSI
SolarMeters® :..... 240° F (115° C) @ 0 PSI
Full scale accuracy: ..... +/- 5%
Meter body material: ..... Polysulfone
Adapter material..... Polysulfone
SolarMeters® :..... Brass
O-ring seals: ..... Viton
Max. pressure drop: ..... 2 psi
Approximate shipping wt.. ½ lb. (.23 kg)

F-45750LHN-12
In-Line

Standard models for liquid

Pipe Size	Dual Scale Range GPM	Dual Scale Range LPM	Float Material	IN-LINE MOUNT MODEL NUMBER	PANEL MOUNT MODEL NUMBER	PANEL MOUNT ADJUSTABLE MODEL NUMBER
3/8" F/NPT	.1 to 1	.4 to 4	Teflon	F-45375LHN-6	F-45375LHNE-6	F-45375LEA-6
1/2" M/NPT	.1 to 1	.4 to 4	Teflon	F-45375LHN-8	F-45375LHNE-8	F-45375LEA-8
3/8" F/NPT	.2 to 2	1 to 7.5	316 SS	F-45376LHN-6	F-45376LHNE-6	F-45376LEA-6
1/2" M/NPT	.2 to 2	1 to 7.5	316 SS	F-45376LHN-8	F-45376LHNE-8	F-45376LEA-8
3/8" F/NPT	.5 to 5	2 to 20	316 SS	F-45500LHN-6	F-45500LHNE-6	F-45500LEA-6
1/2" M/NPT	.5 to 5	2 to 20	316 SS	F-45500LHN-8	F-45500LHNE-8	F-45500LEA-8
3/4" M/NPT	.5 to 5	2 to 20	316 SS	F-45500LHN-12	F-45500LHNE-12	F-45500LEA-12
3/4" M/NPT	1 to 10	4 to 40	316 SS	F-45750LHN-12	F-45750LHNE-12	F-45750LEA-12

Standard models for Air

Pipe Size	Dual Scale Range SCFM	Dual Scale Range M^3HR	Float Material	IN-LINE MOUNT MODEL NUMBER	PANEL MOUNT MODEL NUMBER	PANEL MOUNT ADJUSTABLE MODEL NUMBER
3/8" F/NPT	1 to 12	2 to 20	316 SS	F-45376GHN-6	F-45376GHNE-6	F-45376GEA-6
1/2" M/NPT	1 to 12	2 to 20	316 SS	F-45376GHN-8	F-45376GHNE-8	F-45376GEA-8
3/4" M/NPT	4 to 48	8 to 80	316 SS	F-45750GHN-12	F-45750GHNE-12	F-45750GEA-12

K-Series - Specially Equipped models for liquid

K-Series models are specially equipped for highly corrosive applications.

Pipe Size	Dual Scale Range GPM	Dual Scale Range LPM	Float Material	IN-LINE MOUNT MODEL NUMBER	PANEL MOUNT MODEL NUMBER	PANEL MOUNT ADJUSTABLE MODEL NUMBER
3/8" F/NPT	.1 to 1	.4 to 4	Teflon	F-45375LHKN-6	F-45375LHKNE-6	F-45375LKEA-6
1/2" M/NPT	.1 to 1	.4 to 4	Teflon	F-45375LHKN-8	F-45375LHKNE-8	F-45375LKEA-8
3/8" F/NPT	.2 to 2	1 to 7.5	Hastelloy	F-45376LHKN-6	F-45376LHKNE-6	F-45376LKEA-6
1/2" M/NPT	.2 to 2	1 to 7.5	Hastelloy	F-45376LHKN-8	F-45376LHKNE-8	F-45376LKEA-8
3/8" F/NPT	.5 to 5	2 to 20	Hastelloy	F-45500LHKN-6	F-45500LHKNE-6	F-45500LKEA-6
1/2" M/NPT	.5 to 5	2 to 20	Hastelloy	F-45500LHKN-8	F-45500LHKNE-8	F-45500LKEA-8
3/4" M/NPT	.5 to 5	2 to 20	Hastelloy	F-45500LHKN-12	F-45500LHKNE-12	F-45500LKEA-12
3/4" M/NPT	1 to 10	4 to 40	Hastelloy	F-45750LHKN-12	F-45750LHKNE-12	F-45750LKEA-12

Solarmeters® for liquid with Brass Adapters

Pipe Size	Dual Scale Range GPM	Dual Scale Range LPM	Float Material	IN-LINE MOUNT MALE NPT MODELS MODEL NUMBER	IN-LINE MOUNT SWEAT MODELS MODEL NUMBER
1/2"	.1 to 1	.4 to 4	Teflon	F-45375LHBN-9	F-45375LHBN-8
1/2"	.2 to 2	1 to 7.5	316 SS	F-45376LHBN-9	F-45376LHBN-8
1/2"	.5 to 5	2 to 20	316 SS	F-45500LHBN-9	F-45500LHBN-8
3/4"	.5 to 5	2 to 20	316 SS	F-45500LHBN-13	F-45500LHBN-12
3/4"	1 to 10	4 to 40	316 SS	F-45750LHBN-13	F-45750LHBN-12

5300 Business Drive, Huntington Beach, CA 92649 ● (ph) 714-893-8529 ● (fx) 714-894-9492 ● (em) sales@blue-white.com
View Technical Data at www.blue-white.com

Blue-White Industries, Ltd.

Installation Guideline

Caution: Follow these instructions to avoid failure.

Danger: Wear eye protection when installing or removing flowmeter.

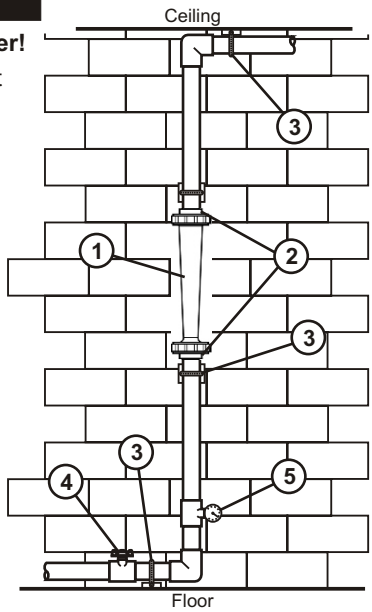

1. Misalignment will damage the meter!

Flowmeter must be installed in an exact vertical plane to ensure accuracy. Be certain of proper plumbing alignments. Misalignment may cause the o-ring seals to leak. The meterbody material can be damaged by UV rays. **Do not install in direct sunlight.**

2. Pipe dope and glue will damage the meter!

Use only Teflon® tape on the threaded adapters. Polysulfone meter body and fittings cannot tolerate PVC Glue and/or pipe dope. Even fumes can cause severe damage. If you are installing your flowmeter to a glued pipe configuration, install the flowmeter *after* all glued fittings are dried and lines are purged of all fumes. **Never** hold the meter body with pliers or like tools. Union nuts should be hand tightened only. **DO NOT OVER-TIGHTEN!**

3. Vibration and heavy loads will damage the meter!

Wall, floor and ceiling mounts and supports must be carefully aligned with the meter body and sturdy enough to support the plumbing and prevent vibration. Never allow the flowmeter to support the weight of related piping.

4. Solenoid valves will damage the meter!

Avoid a system that will impose a sudden burst of flow to the meter. Such a burst will cause the float to impact the float stop with destructive force. Solenoid valves, or other quick opening valves cannot be used unless meter is protected against sudden bursts of flow.

5. High pressures and temperatures will damage the meter!

The maximum acceptable temperature and pressure is interdependent. The maximum acceptable working pressure is dependant on the actual fluid temperature. The maximum acceptable fluid temperature is dependant on the actual working pressure. (see Temperature Vs. Pressure chart).

Maximum Temperature vs. Pressure

F-450N Standard Meters

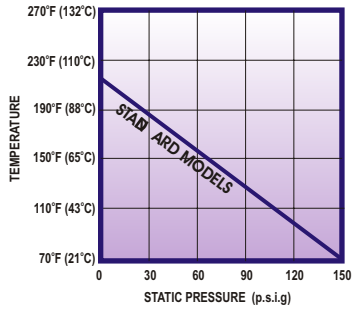

F-450N SolarMeters®

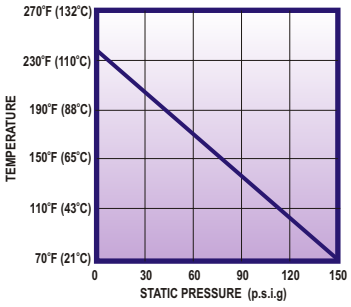

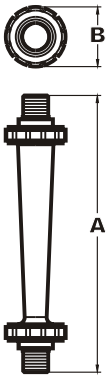

Dimensions
Inline Models

MODEL	A	B
F-45375***-6	8-3/8”	2”
F-45375***-8	8-7/8”	2”
F-45376***-6	8-3/8”	2”
F-45376***-8	8-7/8”	2”
F-45500***-6	8-3/8”	2”
F-45500***-8	8-7/8”	2”
F-45500***-12	8-7/8”	2”
F-45750***-12	10”	2”

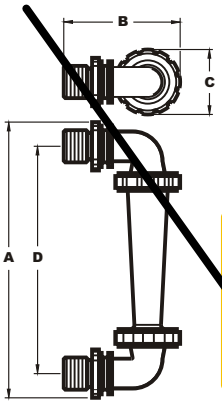

Dimensions
Panel Mount Models

MODEL	A	B	C	D
F-45375	9-7/8”	3-1/8”	2”	8-9/16”
F-45376	9-7/8”	3-1/8”	2”	8-9/16”
F-45500	9-7/8”	3-1/8”	2”	8-9/16”
F-45750	10-1/2”	3-1/4”	2”	9-3/16”

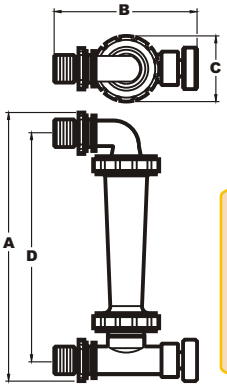

Dimensions
Adjustable Models

MODEL	A	B	C	D
F-45375	9-7/8”	4”	2”	8-9/16”
F-45376	9-7/8”	4”	2”	8-9/16”
F-45500	9-7/8”	4”	2”	8-9/16”
F-45750	10-1/2”	4-1/2”	2”	9-3/16”

F-450N Series Parts

Part Number	Description
F-45011N	3/8” F/NPT In-line Adapter, Polysulfone
F-4441K	3/8” M/NPT 90° Panel mount Elbow, Polysulfone
F-45013N	1/2” M/NPT In-line Adapter, Polysulfone
F-4442K	½” M/NPT 90° Panel mount Elbow, Polysulfone
F-45048N	1/2” M/NPT In-line Adapter, Brass
F-45008N	1/2” SWEAT In-line Adapter, Brass
F-4409	3/4” M/NPT In-line Adapter, Polysulfone
F-4421K	3/4” M/NPT 90° Panel mount Elbow, Polysulfone
F-4425	3/4” M/NPT In-line Adapter, Brass
F-4423	3/4” SWEAT In-line Adapter, Brass
F-4406P	Half Union, Polysulfone
F-4406AL	Half Union, Aluminum
F-4427A	3/8” and 1/2” Panel mount Lock Nut, Polysulfone
F-4428A	3/4” Panel mount Lock Nut, Polysulfone
F-45005	F-45375, F-45376, F-45500 Guide Rod, 316 SS
F-45021	F-45750 Guide Rod, 316 SS
F-45005H	F-45375, F-45376, F-45500 Guide Rod, Hastelloy
F-45021H	F-45750 Guide Rod, Hastelloy
F-4410V	3/8” and 1/2” O-ring seal, Viton
F-4411V	3/4” O-ring seal, Viton
F-45007	3/8” and 1/2” Guide rod holder, Polysulfone
F-45019	3/4” Guide rod holder, Polysulfone

5300 Business Drive, Huntington Beach, CA 92649 ● (ph) 714-893-8529 ● (fx) 714-894-9492 ● (em) sales@blue-white.com
View Technical Data at www.blue-white.com

Blue-White Industries, Ltd.

Sizes and Dimensions for B-100 Pardee Eductor

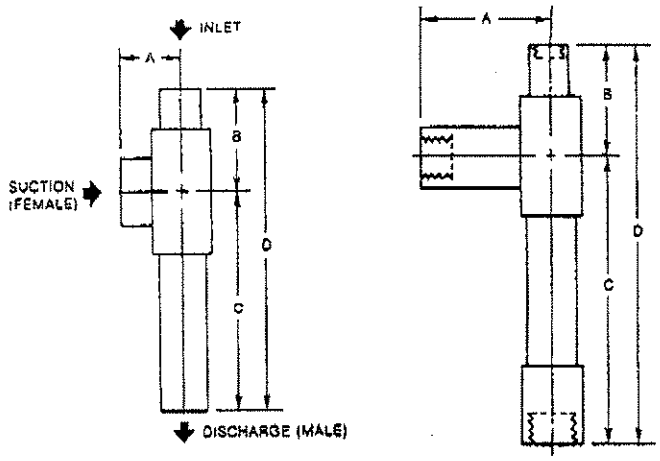

SOCKET THREADED

SIZE	NOMINAL PIPE SIZE		DIMENSIONS (SOCKET)				DIMENSIONS (THREADED)			
	INLET	SUCT. & DISCH.	A	B	C	D	A	B	C	D
½	½"	½"	1⅜"	2¼"	3½"	5¾"	1⅜"	3⅝"	4⅝"	8"
¾	½"	¾"	1¾"	2⅝"	4¼"	6⅞"	1¾"	3¾"	5½"	9¼"
1	¾"	1"	1⅞"	2⅞"	4¾"	7⅝"	1⅞"	4⅛"	6⅛"	10¼"
1¼	1"	1¼"	2¼"	3⅜"	6"	9¼"	2¼"	4¾"	7½"	12⅛"
1½	1"	1½"	2½"	3⅝"	7⅛"	10⅜"	2½"	5"	8¾"	13⅝"
2	1½"	2"	2⅞"	4¼"	8⅞"	13"	2⅞"	5⅞"	10⅝"	16⅞"
2½	1½"	2½"	3⅜"	4¾"	10⅛"	14¾"	3⅜"	6⅝"	12¼"	18⅝"
3	2"	3"	3¾"	5½"	11⅜"	16⅝"	3¾"	7"	13½"	20½"

DIMENSIONS ARE APPROX.

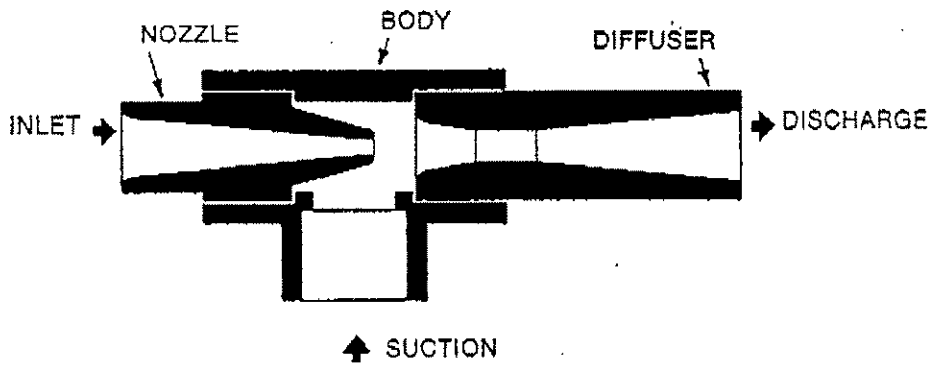

NOTE: Nozzle and diffuser are not removable

PARDEE ENGINEERING
9751 N.W. 91 COURT. MIAMI, FLORIDA 33178
PHONE:(305)885-8835 . FAX:(305) 885-8449

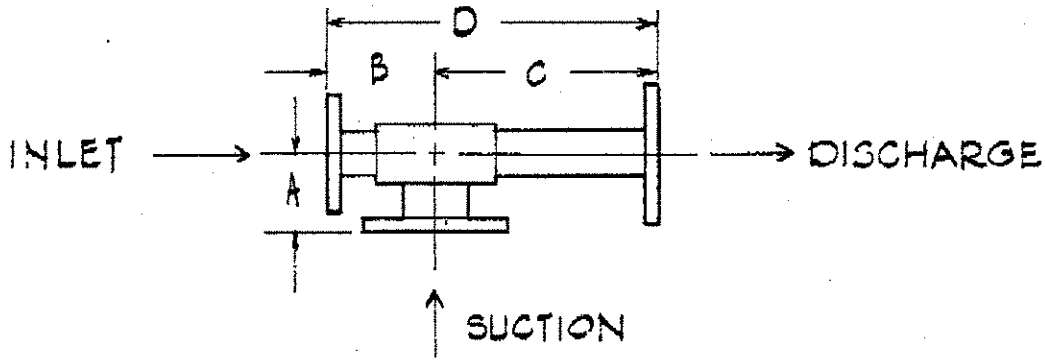

SIZE	N.P.S. INLET	N.P.S. SUCTION	N.P.S. DISCH.	DIMENSIONS A	DIMENSIONS B	DIMENSIONS C	DIMENSIONS D
1/2	1/2"	1/2"	1/2"	2 3/8"	2 3/8"	3 5/8"	6"
3/4	1/2"	3/4"	3/4"	2 7/8"	2 3/4"	4 3/8"	7 1/8"
1	3/4"	1"	1"	3 1/8"	3"	4 7/8"	7 7/8"
1 1/4	1"	1 1/4"	1 1/4"	3 5/8"	3 1/2"	6 1/8"	9 5/8"
1 1/2	1"	1 1/2"	1 1/2"	4"	3 3/4"	7 1/4"	11"
2	1 1/2"	2"	2"	4 1/2"	4 3/8"	9"	13 3/8"
2 1/2	1 1/2"	2 1/2"	2 1/2"	5 1/4"	4 7/8"	10 1/4"	15 1/8"
3	2"	3"	3"	5 3/4"	5 3/8"	11 5/8"	17"
4	3"	4"	4"	7 1/8"	6 3/4"	16 1/2"	23 1/4"
6	4"	6"	6"	9 5/8"	8 7/8"	28 1/8"	37"

DIMENSIONS ARE APPROXIMATE

NEW ADDRESS: PARDEE ENGINEERING
9751 N.W. 91 Ct. MIAMI, FL 33178
PHONE: (305) 885-8835 FAX: (305) 885-8449

STANDARD FLG'D. PVC EDUCTOR

PARDEE ENGINEERING
935 PARDEE STREET
BERKELEY, CA 94710

13-Aug'81

A-2286

Section
7

HYDROGEN DILUTION BLOWER AND COMPONENTS

Blower, 2700 cfm(BLR-J450A, BLR-J450B)

Backdraft Damper & Condensate Drip Assy.

Backdraft Damper Spool Assembly

Blower, 300 cfm(BLR-J500A, BLR-J500B, BLR-J520A, BLR-J520B, BLR-J540A, BLR-J540B, BLR-J560A, BLR-J560B

Air Check Valve & Condensate Drip Assy.

Air Check Valve & Spool Assembly

Dilution System Calculations

Fiberglass Backward Curved Centrifugal Fans

Type FA Series 41 Series 41P

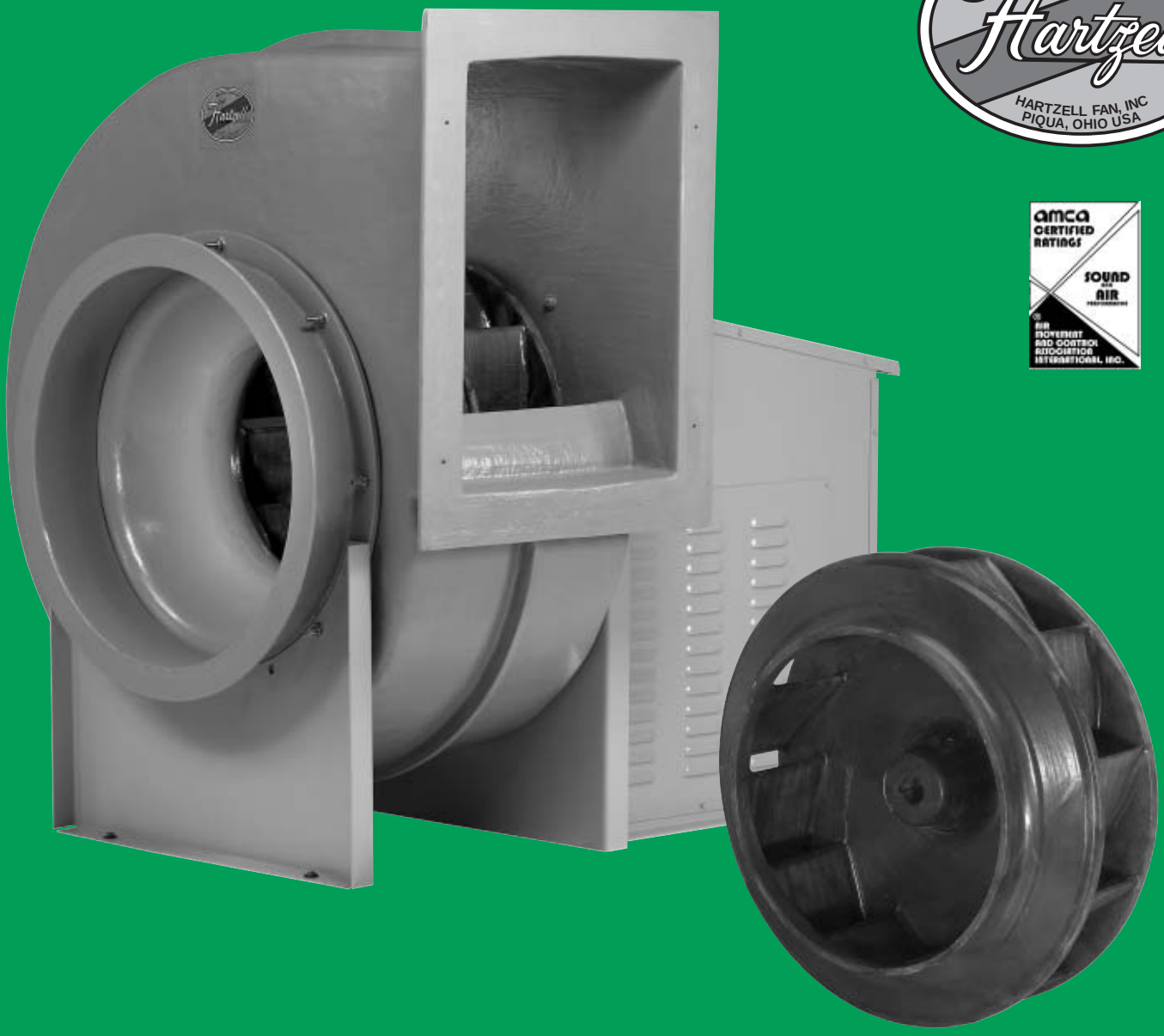

HARTZELL®

Hartzell Fan, Inc., Piqua, Ohio 45356
www.hartzellfan.com

Bulletin A-160-C April 2005

Index

Hartzell Model Code Explanation . . . . . Page 2
General Fiberglass Construction Feature . . . Page 3
Selection Guide and Temperature Altitude Corrections. . . . . Page 4
Corrosion Resistance Guide . . . . . Page 5
Centrifugal Fan Classifications and Arrangements . . . . . Page 6
Series 41 Fiberglass Backward Curved Fans . . . . . Page 7
Dimensions – Arrangements 1, 9, & 10 . . . Page 8-9
Dimensions – Arrangement 4 . . . . . Page 10
Material Specifications/Weights. . . . . Page 11
Series 41P Fiberglass Backward Curved Fan, Packaged . . . . . Page 12
Dimensions – Arr. 10 Series 41P . . . . . Page 13
Performance Data – Series 41 and Series 41P, Type FA . . . . . Pages 14-20
Performance Data – Series 41 Arrangement 4, Type FA . . . . . Pages 21
Options and Accessories . . . . . Pages 22-23

Certified Ratings for Air and Sound

Hartzell Fan, Inc. certifies that the Series 41, Fiberglass Backward Curved Centrifugal Fans, Type FA shown on pages 7–11 and 14–21, and Series 41P, Fiberglass Backward Curved Centrifugal Fan, Packaged, shown on pages 12–20, are licensed to bear the AMCA Seal for Air and Sound Performance. The ratings shown are based on tests and procedures performed in accordance with AMCA Standard 211 and AMCA Standard 311 and comply with the requirements of the AMCA Certified Ratings Program.

Sound Performance data is available upon request. Please contact the factory and ask for Engineering Publication #SD-160.

Hartzell Model Code Explanation

Hartzell Model Code

A 41– 9 –33 1 FA 100 FG OP M 3

Type
- A – Production Item
- S – Stock Item
- Q – Special Quote

Product Series
Arrangement (centrifugals only)
Size (nominal wheel diameter, inches)
Class
Wheel Code
Wheel Width (entries represent percents)
Material of Construction
Motor Enclosure
Motor Horsepower
Motor RPM/Phase

Motor RPM/Phase Code

3 Phase	1 Phase
2 = 3450	B = 3450
3 = 1750	C = 1750
4 = 1140	D = 1140
5 = 870	E = 870
6 = 690	F = 690
7 = 575	G = 575

Motor Horsepower

Horsepower	1/4	1/3	1/2	3/4	1	1 1/2	2	3	5	7 1/2	10	15	20	25	30	40	50	60	75	100	125	150	200
Code Letter	D	E	F	G	H	I	J	K	L	M	N	O	P	Q	R	S	T	U	V	W	X	Y	Z

Example:

Assume a needed performance of 12,000 CFM at 5" SP, standard air. Reading the 33" rating table for 100% width on page 17, we find a fan RPM of 1,168 and brake horsepower (BHP) of 12.3. Required motor horsepower is 15. The model code can be constructed as follows: Type will be a production item (code A), product series for the Fiberglass Backward Curved Fans is 41, arrangement is 9 (code 9), size of the wheel is 33", class of construction is I (code 1), wheel code for this item is FA, wheel width is 100% (code 100), material of construction is fiberglass (code FG), motor enclosure is open protected drip-proof (code OP), motor horsepower is 15 (code O), and motor RPM/phase is 1750 (code 3).

Note: All other informational fields must be filled with hyphens/dashes (-) if they are not applicable to the fan being considered.

This bulletin lists Hartzell's line of Fiberglass Backward Curved Centrifugal Fans, Type FA and accessories. More than 70 Hartzell offices can provide specific performance and installation data to meet your requirements. Call your Hartzell representative for assistance. Visit our website **(www.hartzellfan.com)** or call toll-free **(1-800-336-3267)** for the name of your Hartzell representative.

General Fiberglass Construction Features

A variety of corrosion problems plague industry today. Fans and blowers made of coated steel or metals such as stainless and monel can handle some problem areas. Please refer to the corrosion resistance table on page 5 of this bulletin. Fiberglass centrifugal blowers can be used in most applications where corrosive elements exist in fume and vapor form. The resistance to corrosive elements is a major advantage, but the physical properties of fiberglass equipment offer these additional advantages:

- Fiberglass equipment is corrosion resistant.
- Fiberglass equipment weighs 25% less than comparable equipment made of carbon steel.
- Fiberglass has an extremely high strength-to-weight ratio, stronger than steel on a per-pound basis.
- Dimensional stability of fiberglass is excellent.
- Fiberglass air moving equipment will not become brittle at low temperatures and at 0°F the laminated fiberglass will be stronger than at room temperature.

Hartzell Fan, Inc. conforms to ASTM D4167-97, Standard Specification for fiber-reinforced plastic fans and blowers, when optional surfacing veil, electrical grounding, and dynamic balancing to ASTM D4167-97 levels, are added to the fan.

The following are standard Hartzell fiberglass construction features:

- Corrosion resistant polyester resin, having a Class I flame spread rate of 25 or less is used for all housings. Vinylester resin having a Class I flame spread rate of 25 or less is used for all wheels.
- All structural parts in the airstream are fiberglass and resin. All fiberglass surfaces are protected with a minimum 10-mil thickness of chemical, flame, and ultraviolet resistant resin.
- Shafts are turned, ground, polished, and keyed at both ends with a fiberglass sleeve in the airstream. Shafts are sized to operate well below critical speed. 304 or 316 Stainless steel or monel shafting is available as an option at extra cost.
- Internal hardware (airstream) is Type 304 stainless steel. All internal hardware (airstream) is encapsulated. All external hardware (out of airstream) is zinc plated as standard. Where metal is subject to attack by the corrosive elements being handled, all metal parts can be resin-coated after assembly.
- A fiberglass and neoprene shaft seal is placed where the shaft leaves the housing along with a neoprene shaft slinger between the seal and wheel on belt drive units (seal is not gas tight).

Series 41P

Series 41

Fiberglass Centrifugal Fans

- Bearings on belt drive units are heavy duty, deep row radial ball or double row spherical roller type self-aligning and shielded in cast iron housings. Long inner races ensure even load distribution, providing a high radial and thrust load capacity. Bearings are relubricable for continuous service with lubrication tubes extended to the exterior of fan base as necessary.
- V-Belt Drives are oversized for long life and continuous duty as standard. Fixed pitch or variable pitch drives are available upon request. Belts are oil, heat, and static resistant type.

Type FA Wheel

Type FA Wheel Features

The Type FA wheel is unique in the fan and blower industry. It is available in diameters from 12" to 60" in both clockwise and counter-clockwise rotations. The wheel is airfoil design and solid fiberglass die formed and coated with Dow Derakane 510-A corrosion resistant vinylester resin. The manufactured wheel is a single piece, removed from the pattern whole. This ensures each wheel is aerodynamically identical and provides reliable repeatable performance without the variability of hand made and taped components. The design is the result of a substantial investment in research, development, tooling, and manufacturing methods by Hartzell Fan, Inc.

The type FA wheel is highly efficient, with tapered inlet side and airfoil blades. It has non-overloading horsepower characteristic curve. When used in conjunction with a precision inlet cone it **efficiently moves large volumes of air at high pressures with low noise characteristics at low RPM.**

The fiberglass resin has a Class I flame spread rate of 25 or less. The wheel is electronically statically and dynamically balanced to the requirements of Fan Application Category BV-3 of AMCA ANSI Std. 204-96 and receives an Operational Test and Inspection before shipment. Special constructions are available for abrasive environments or extremely corrosive environments.

Hartzell Selection Guide

The Hartzell Fiberglass Backward Curved Centrifugal Fan performances on the following pages are based on standard air conditions (sea level, 70°F, and 29.92 inches barometric pressure). Performance data does not include drive losses on belt drive units.

How to use Performance Tables

1. Select a model for a given air delivery and pressure by looking up the required flow vertically along the left column of the performance table and moving to the required pressure. The model is identified with each table.
2. Note the required RPM and BHP. Refer to page 2 Hartzell Model Code Explanation for additional details.
3. If non-standard temperature or altitude is involved, correct to standard air density (see Temperature/Altitude Applications).

When placing your order, be sure to specify the Hartzell Model Code. Be sure to include fan model, performance requirements, operating temperature, motor data (enclosure, voltage, mounting position, etc.), and a list of required accessory items. (See pages 22 and 23.) For selection assistance and additional data contact your local Hartzell Sales Representative for assistance.

Temperature/Altitude Applications

When a fan operates in ambient conditions, generally it is handling standard air at 70°F, 29.92" barometric pressure, weighing 0.075-lbs./cu. ft. For an application where the fan operates at other than ambient conditions (temperature, altitude, or both), correction factors must be applied to the selection of the fan. In addition, the standard construction of the fan must be modified.

Correction factors for temperatures and altitudes are provided in Table 1. When a fan operates at other than ambient conditions, the correction factors in Table 1 will be required to correct static pressure and horsepower.

Table 2 shows the maximum safe operating speeds for each size fan wheel. At high temperatures, these maximum safe operating speeds should be derated.

Table 3 provides maximum safe speed correction factors by temperature and material construction. An example on the use of these tables appears at the bottom of this page.

Table 1 Altitude/Temperature Correction Factors

Temp.*(°F)	-50	-25	0	25	50	70	100	125	150	175	200	250
Factor	0.77	0.82	0.87	0.91	0.96	1.00	1.06	1.10	1.15	1.20	1.25	1.34

Alt.** (Ft.)	0	1,000	2,000	3,000	4,000	5,000	6,000	7,000	8,000	9,000	10,000
Factor	1.00	1.04	1.08	1.12	1.16	1.20	1.25	1.30	1.35	1.40	1.46

Above table has inverted values. Actual density is the reciprocal of the above values.
***At sea level. **At 70°F.**
For corrections involving both temperature and altitude, correction factors should be multiplied.
Example: 150°F at 7000 ft.: Temperature factor 1.15 x altitude factor 1.30 = 1.50 combined correction factor.

Table 2 Maximum Safe Speeds @70°F

Fan Size	100% Width	66% Width
12	4,520	5,320
15	3,600	4,340
18	2,990	3,610
22	2,440	2,950
24	2,240	2,710
27	2,000	2,410
30	1,840	2,220
33	1,670	2,020
36	1,530	1,850
40	1,370	1,660
44	1,240	1,500
49	1,130	1,360
54	1,020	1,230
60	920	1,110

Table 3 Maximum Safe Speed Correction Factors*

Temp. (°F)	0	70	100	150	175	200	225	250
FRP	1.00	1.00	1.00	0.98	0.95	0.91	0.82	0.70

*** To correct maximum safe operating speeds (Table 2) for high temperatures, multiply those speeds by correction factors from Table 3.**

Use of Correction Factors and Tables

First select size, RPM and BHP of the blower needed.

If temperature or altitude is involved, correct to standard air.

Example: Assume the required performance to be 12,000 CFM at 4.62" SP, 175°F and 2000 feet altitude.

1. Temperature factor 1.20 x altitude factor 1.08 = 1.30 combined correction factor.
2. Correct SP to standard 4.62" SP x 1.30 = 6" SP for 70°F at sea level.
3. A Series 41, size 33" class II 66% width belt drive backward curved centrifugal, selected from the rating tables (page 17) for the new condition shows 12,000 CFM at 6" SP, 1,398 RPM and 15.5 BHP.
4. Correct the horsepower and static pressure in item 3 to non-standard performance by dividing by factor: 6" SP divided by 1.30 = 4.62" SP; 15.5 BHP divided by 1.30 = 11.9 BHP.
5. Check the maximum safe speed. Maximum speed at 70°F for fan size 33" 66% width, 2,020 RPM. Using the maximum safe speed factor table for fiberglass construction yields a safe speed factor of .95. The maximum safe speed is 2,020 x .95 = 1,919 RPM; thus operation at 1,438 RPM at 175°F is satisfactory.
6. Final performance of the unit at the assumed conditions: 12,000 CFM at 4.62" SP, 1,398 RPM, 11.9 BHP at 175°F and 2000 feet altitude.
7. Size motor for cold startups and use a special high altitude motor if altitude exceeds 3300 feet.

Corrosion Resistance Guide

Temperature values shown are for immersion or condensate contact applications. Where temperature values are shown, resin is suitable for hood and duct type applications for the full operating temperature range of the product. See product specifications for materials of construction and maximum operating temperature limits.

Environment	Hetron 693 Ashland F.	6694 Reichold F.	510A Dow F.
ACIDS			
Acetic to 10%	180	200	210
Acetic to 50%	90	160	180
Acetic to 100%		NR	NR
Acrylic to 25%	–	100	100
Benzene Sulfonic to 25%	180	210	150
Benzene Sulfonic 25% up	90	210	NR
Benzoic	250	220	210
Boric	180	220	210
Butyric to 50%	150	150	210
Butyric 50% up	–	100	80
Carbonic	160	220	NR
Chloroacetic to 25%	NR	*180	*150
Chloroacetic 25% to 50%	NR	*150	*120
Chromic to 5%	100	110	150
Chromic to 10% to 20%	–	NR	150
Citic	*200	*220	*210
Fluoboric	*S90	*S220	*S210
Gluosilicic up to 10%	S100	S150	S180
Formic up to 10%	200	150	180
Gluconic to 50%	120	180	180
Hydrobromic to 25%	*160	*170	*180
Hydrochloric to 15%	*230	*210	*180
Hydrocyanic to 10%	200	170	210
Hydroflouric to 10%	***S100	***S150	***S150
Hydrofluorsilicic up to 10%	*S100	*S150	*S180
Hypochlorous to 20%	90	110	NR
Lactic	*200	*220	*210
Maleic	170	210	210
Nitric to 5%	200	170	150
Nitric 5% to 20%	–	140	120
Oleic	200	220	210
Oxalic	*220	*220	*210
Perchloric to 10%	H&D	**150	**150
Phosphoric	*220	*S210	*S210
Phosphoric, super	–	*S210	*S210
Phthalic Anhydride	*150	*210	*210
Picric to 10%	100	170	NR
Silicic	–	220	NR
Stearic	200	220	210
Sulfamic to 25%	160	150	NR
Sulfuric to 25%	*200	*220	*210
Sulfuric to 50%	*200	*200	*180
Sulfuric to 70%	*150	*180	*100
Sulfuric to 80%	NR	80	NR
Sulfurous to 10%	90	110	120
Tannic	200	220	210
Tartaric	220	220	210
Trichoroacetic to 50%	*90	*220	*200
ALCOHOLS			
Amyl	200	210	120
Benzyl	NR	100	NR
Butyl	190	150	120
Ethyl	90	120	80
Methyl	90	80	NR
GASES AND VAPORS			
Ammonia, Dry	90	170	100
Ammonia, Wet	90	NR	NR
Bromine, Wet	90	*100	NR
Carbon Dioxide	250	250	250
Carbon Monoxide	200	250	250
Chlorine, Dry	*200	*210	NR
Florine	–	NR	80
Hydrogen Fluoride, Vapor	*90	*S180	*S180
Hydrogen Sulfide to 5%	250	240	180
Sulfur Dioxide, Dry	200	250	210
Sulfur Dioxide, Wet	200	250	210
Sulfur Trioxide, Wet	–	220	210

Environment	Hetron 693 Ashland F.	6694 Reichold F.	510A Dow F.
ALKALIES (Synthetic Veil)			
Ammonium Bicarbonate to 50%	140	S170	160
Ammonium Carbonate	120	S140	150
Ammonium Hydroxide to 5%	S90	S180	S180
Ammonium Hydroxide to 10%	S90	S170	S150
Ammonium Hydroxide to 29%	NR	S100	S100
Barium Carbonate	180	S240	210
Barium Hydroxide to 10%	–	S170	150
Calcium Hydroxide to 15%	160	S210	S180
Magnesium Carbonate	160	S210	180
Potassium Bicarbonate to 10%	90	S170	S150
Potassium Carbonate to 10%	90	S180	S150
Potassium Hydroxide to 25%	NR	S120	S150
Sodium Bicarbonate to 10%	140	S210	S180
Sodium Carbonate to 35%	90	S180	S180
Sodium Hydroxide to 10%	NR	S160	S180
Sodium Hydroxide to 25%	NR	S160	S180
Sodium Sulfide	90	S220	S210
Trisodium Phosphate to 50%	–	S175	210
SALTS			
Aluminum Chloride	*120	*240	*210
Aluminum Potassium Sulfate	160	240	210
Aluminum Sulfate	250	240	210
Ammonium Chloride	*200	*220	*210
Ammonium Nitrate	200	220	220
Ammonium Persulfate	150	200	180
Ammonium Persulfate, saturate	150	NR	NR
Ammonium Sulfate	200	220	220
Aniline Sulfate to 25%	150	220	210
Aniline Sulfate, saturated	150	220	NR
Barium Chloride	200	240	210
Barium Sulfide	NR	S210	180
Calcium Chlorate	180	220	220
Calcium Chloride	250	240	220
Calcium Sulfate	*200	*240	*210
Copper Chloride	*250	*220	*220
Copper Cyanide	90	S220	210
Copper Fluoride	NR	S170	NR
Copper Sulfate	250	240	210
Ferric Chloride	*250	*220	*210
Ferric Nitrate	170	220	210
Ferric Sulfate	200	220	210
Ferrous Chloride	*220	*220	*210
Ferrous Nitrate	160	220	210
Ferrous Sulfate	220	220	210
Lead Acetate	160	220	210
Magnesium Chloride	220	240	210
Magnesium Hydroxide	–	S210	210
Magnesium Sulfate	200	210	210
Mercuric Chloride	*210	*220	*210
Mercurous Chloride	210	220	210
Nickel Chloride	220	220	210
Nickel Nitrate	220	220	210
Nickel Sulfate	220	220	210
Potassium Chloride	200	240	210
Potassium Dichromate	200	220	210
Potassium Ferricyanide	200	220	210
Potassium Nitrate	200	220	210
Potassium Permangnate	150	210	210
Potassium Persulfate	90	220	210
Potassium Sulfate	200	240	210
Silver Nitrate	200	220	210
Sodium Acetate	150	220	210
Sodium Bisulfate	200	220	210
Sodium Chloride	200	240	180
Sodium Chlorite to 10%	175	170	150
Sodium Cyanide	100	220	210
Sodium Dichromate	160	220	210

Environment	Hetron 693 Ashland F.	6694 Reichold F.	510A Dow F.
SALTS (cont'd.)			
Sodium Ferricyanide	220	220	210
Sodium Floride	–	S180	S180
Sodium Nitrate	220	220	210
Sodium Nitrite		220	NR
Sodium Silicate PH less than 1	160	210	NR
Sodium Sulfate	180	240	210
Sodium Sulfite	–	220	210
Stannic Chloride	*180	*220	*210
Stannous Chloride	*200	*220	*210
Zinc Chloride	200	*220	*210
Zinc Nitrate	180	220	210
Zinc Sulfite	150	220	NR
SOLVENTS			
Acetone to 10%	NR	180	180
Benzene	90	80	NR
Carbon Disulfide	NR	NR	NR
Carbon Tetrachloride	90 VAPOR	110	150
Chlorobenzene	NR	NR	NR
Ethyl Acetate	NR	NR	NR
Ethyl Chloride	90 VAPOR	NR	NR
Ethylene Dibromide	NR	NR	NR
Ethylene Glycol	250	220	210
n-Heptane	120	210	210
Hexane	–	150	160
Methyl Ethyl Ketone to 10%	NR	80	NR
Naphtha	200	210	180
Naphthalene	130	220	210
Tetrachloroethylene	NR	100	80
Toluene	90	NR	80
Xylene	90	80	80
BLEACHES			
Calcium Chlorate	180	220	220
Calcium Hypochlorite	100	NR	S160
Chlorine Dioxide up to 15%	–	160	*200
Chlorine Water	*125	*210	*200
Hydrogen Peroxide to 30%	120	100	150
Sodium Chlorate	90	210	210
Sodium Hypochlorite to 15%	NR	125	S180
OTHERS			
Alum. Chlorohydroxide to 50%	–	220	210
Ammonium Phosphate	150	210	210
Aqua Rega	NR	*80	NR
Detergents	120	170	150
Glycerine	200	220	210
Kerosene	120	210	180
Photographic Solutions	–	80	NR
Perchlorethylene	NR	100	80
Sodium Tetraborate	180	S210	180
Sodium Tripolyphosphate	125	210	210
Sodium Xylene Sulfonate	–	170	160
Sorbitol Solutions	180	220	160
Urea	90	170	150
Urea-Ammonium-Nitrate	–	120	120
Fertilizer Fumes	100	120	150
Shell-D-D	NR	100	NR
Steam Vapor	180	210	180

Reference
C.R.G.1.1

NOTES: **NR = Not Recommended S = Synthetic surfacing veil or mat required. Contact factory. "–" = No test data available**

*** Special shaft and hardware required, contact factory.**
**** Special design considerations required (explosive environment), contact factory.**
***** Do not use HartKoate. Special shaft and hardware required, contact factory.**
For environments not shown, or when temperatures exceed the maximum listed, contact factory.
Hydrocarbon fuel environments may require static grounding, contact factory.

Do not use HartKoate (Alum. Oxide) with Hydrofluoric acid.

Hartzell Centrifugal Fan Classifications

Hartzell Series 41 Fiberglass Backward Curved Centrifugal Fans, Type FA, 100% width, are designed and classified to perform within the centrifugal fan classification parameters established by AMCA Standard No. 2408; AMCA Publication 99. Hartzell Series 41 Fiberglass Backward Curved Centrifugal Fans, Type FA, 100% width are available in Class I and II construction. Hartzell Series 41 in 66% width are available in Class I, II, and III construction. Series 41P are available in Class I construction only. See performance tables for specific ratings. These parameters are explained in the following table.

FAN CLASS	PERFORMANCE RANGE*	TABLE SHADING
I	5" @ 2300 FPM To 2½" @ 3200 FPM	
II	8½" @ 3000 FPM To 4¼" @ 4175 FPM	
III	13½" @ 3780 FPM To 6¾" @ 5260 FPM	

*** At standard air conditions (70°F, 29.92 in. HG barometric pressure, .075 lbs./ft.3). Static pressure shown in inches of water; outlet velocity shown in feet per minute. Performance Ranges apply only to 100% width construction.**

Centrifugal Fan Arrangements

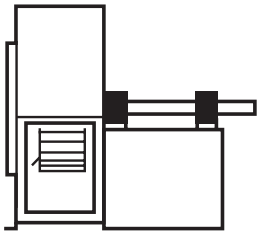

Arrangement 1

Unit furnished with shaft and bearings, less motor and drive. Designed to be driven by a separately mounted motor. Impeller is overhung – two bearings on base. Temperature limitations: 250°F.

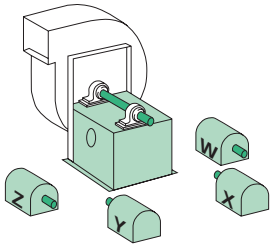

Motor Position Designation

Motor position designation is necessary when ordering the following for Arrangement 1 fans –

1 – V Belt Drive.
2 – Vibration Bases.
3 – Belt Guards.

Note: Location of motor is determined by facing the drive side of the fan and designating the motor position by letters W, X, Y, or Z. Consider discharge location and height when specifying.

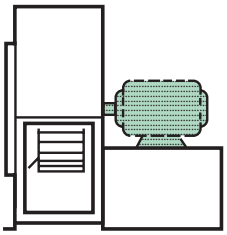

Arrangement 4

Direct drive packaged unit, wheel is overhung and attached to the shaft of the electric motor. No bearings on fan. Temperature limitations: 200°F.

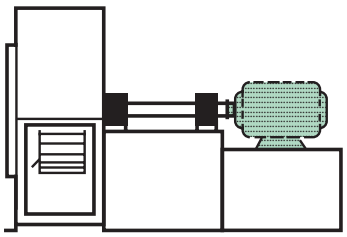

Arrangement 8

Direct coupled configuration with motor mounted to common fan base. Impeller is overhung and supported by two bearings on fan base. Temperature Limitations: 250°F.

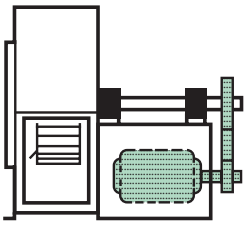

Arrangement 9

Belt drive configuration with motor mounted on outside of bearing base support. Packaged unit, wheel is overhung, slide rail motor base permits easy adjustment of belt tension. Available on either left or right hand side of base (when facing drive end of shaft). Temperature limitations: 250°F.

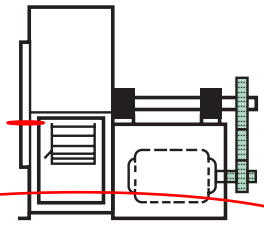

Arrangement 10

Belt drive configuration with motor mounted inside base. Packaged unit, wheel is overhung. Temperature limitations: 250°F.

Adapted from AMCA Standard 99-2404-03, *Drive Arrangements for Centrifugal Fans*, and AMCA Standard 99-2407-03, *Motor Positions for Belt or Chain Drive Centrifugal Fans*, with written permission from Air Movement and Control Association International, Inc.

Series 41P Backward Curved Centrifugal Fan, Packaged, Type FA

Series 41P Hartzell Fiberglass Backward Curved Centrifugal Fan, Packaged, offers **non-overloading, high efficiency, low noise**, and economy for corrosive atmospheres in a c**ompact packaged Class II design**. This fan is unique in the fan and blower industry. The fan incorporates the proven, highly efficient, backward curved, airfoil-bladed, solid fiberglass, Type FA wheel in a solid fiberglass housing. This design incorporates the airfoil centrifugal wheel, centrifugal fan housing, and inlet cone to produce a compact, highly efficient unit with low noise characteristics.

- **Applications** – Developed to perform throughout the entire **Class II Performance Range** for compatible corrosive applications where it is advantageous to have fiberglass materials and have the motor out of the airstream with the versatility of a belt drive fan.
- **Performance** – Type FA fiberglass airfoil wheel with inlet cone and aerodynamically designed housing produces from **800 CFM to 30,000 CFM** at pressures from **free delivery** to **12" W.G. at high efficiencies** with non-overloading horsepower, low noise, and low RPM. Max. temperature capability is 250°F.

Series 41P
Shown with optional accessories

Hartzell Fan, Inc. certifies that the Series 41P, Fiberglass Backward Curved Centrifugal Fan, Packaged, shown herein is licensed to bear the AMCA seal for air and sound performance. The ratings shown are based on tests and procedures performed in accordance with AMCA Publication 211 and Publication 311 and comply with the requirements of the AMCA Certified Ratings Program.

Sound Performance data is available upon request. Please contact the factory and ask for Engineering Publication #SD-160.

Type FA Wheel

Features

- **Sizes** – 12" through 36" wheel diameters. Packaged Class II construction, Arrangement #10 Belt Drive with weather cover. Available in both 100% and 66% widths.
- **FRP Materials** – Solid fiberglass wheel molded with Dow Derakane 510-A corrosion resistant vinylester resin having a Class I flame spread rate of 25 or less. The housing and other standard FRP components are constructed of fiberglass and Ashland Hertron 693 corrosive resistant polyester resin having a Class I flame spread rate of 25 or less. No metal parts are exposed in the airstream. See Corrosion Resistance Guide on page 5 for resin characteristics. Other resins are available.
- **Type FA Wheel** – **High efficiency, airfoil** design with **one-piece, solid fiberglass**, construction. Tapered inlet side design efficiently moves large volumes of air at high pressures. Wheel has non-overloading horsepower characteristic curve.
- **Rotation and Discharge Positions** – Available in both clockwise and counter-clockwise rotations and in all standard discharge positions. Housing discharge position can be changed on fan sizes 12" through 36".
- **Easy Installation and Maintenance** – Motor, drives and bearings are readily accessible for ease in wiring, installation, adjustment, and lubrication. Weather cover and guards are available.
- **Shafts** – Shafts are turned ground and polished, keyed at both ends with fiberglass sleeve in the airstream and sized to operate well below critical speed.
- **Bearings** – Bearings are heavy duty, self-aligning, ball or roller type, in cast iron pillow block housings, selected for long life at maximum Class II construction limits, and include extended lubrication fittings as standard.
- **Standard Shaft Seal** – A fiberglass and neoprene shaft seal is placed where the shaft leaves the housing along with a neoprene shaft slinger between the seal and wheel. Seal is not gas tight.
- **Hardware** – Airstream hardware is Type 304 stainless steel and encapsulated.
- **Motor Out of the Airstream** – Exterior mounting of Drip-Proof Protected motor on an adjustable motor pivot base is standard. Motors can be furnished as TEFC, Mill and Chemical Duty, or to specifications upon request. Motor HP and frame size limits are identified in Dimensions and Material Specifications table.
- **Drives (Belt Drive Fans)** – V-Belt Drives are oversized for long life and continuous duty and are fixed pitch as standard. Variable pitch drives for sizes 24" through 36" are available upon request. Belts are oil, heat, and static resistant type.
- **Balancing** – The fan is electronically statically and dynamically balanced to the requirements of Fan Application Category BV-3 of AMCA ANSI Std. 204-96. All fans receive an inspection prior to shipment and, whenever possible, an operational test.
- **Flanged Duct Connections** – Outlet flange is standard, inlet flange is optional. Flange bolt holes are optional.
- **Bases** – Heavy gauge, welded, hot rolled steel with epoxy coating are standard. **Base is sized to accept maximum motor frame size required for Class II operation.**
- **Options and Accessories** – See pages 22 and 23.
- **Spark Resistant Construction and Protective Coatings** – Spark resistant construction for fiberglass equipment is optional, and for abrasive environments or extremely corrosive environments, special construction is available, see page 23.

Dimensions – Series 41P, Arrangement 10

SERIES 41P, Type FA
Sizes 12" Through 36", Rotatable Housing
Standard Construction – Class II, Maximum Temperature – 250°F.

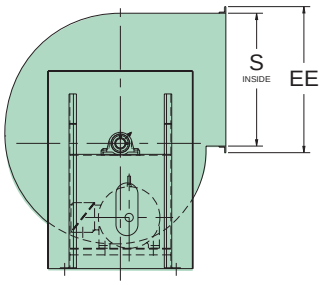

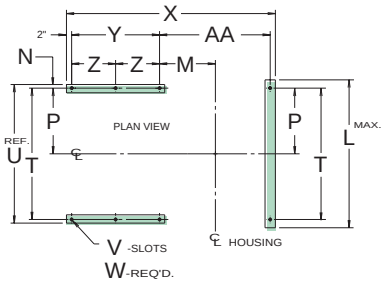

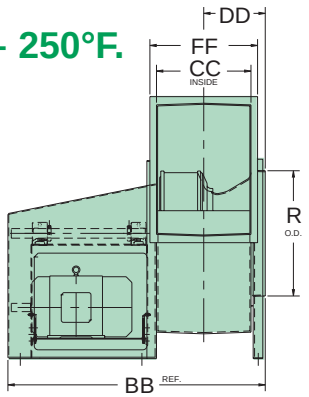

Principal Dimensions (Inches) – Sizes 12" – 36"

Fan Size	A	B	C	D	E	F	G	H	J	L	M 100% Width	M 66% Width	N
12	17	15 1/2	13	11 1/2	12 3/8	20 1/8	10 7/8	10 1/8	11 1/16	20 3/4	7 15/16	7 5/8	5/8
15	17	18 5/8	16 3/16	14 1/2	15 7/16	24 5/8	13 9/16	12 5/8	13 1/4	20 3/4	9 3/16	8 7/16	5/8
18	20	21 15/16	19	17 1/2	18 5/8	28 15/16	16 3/8	15 1/4	15 1/4	24 3/4	9 5/16	8 1/2	5/8
22	24 3/4	26 1/4	21 1/8	21 5/16	22 11/16	33 1/2	19 15/16	18 9/16	17 3/16	29 3/4	10 7/8	9 7/8	5/8
24	27	28 5/16	23	23 1/8	24 5/8	36 5/16	21 11/16	20 3/16	18 11/16	31 1/8	11 5/8	10 1/2	5/8
27	28 1/2	32 1/2	24	26	27 11/16	39 15/16	24 5/16	22 5/8	20 15/16	34 3/8	13 1/16	11 3/16	13/16
30	30 1/2	35	28 1/2	28 1/4	30 1/16	44 15/16	26 3/8	24 9/16	22 3/4	37 5/8	14	12 5/8	13/16
33	37	38 3/16	28 11/16	31	33	47 1/4	29	27	24 15/16	41 5/8	15 1/8	13 5/8	13/16
36	37	41 5/16	31 1/4	33 3/4	36	51 5/16	31 5/8	29 3/8	27 3/16	44 1/8	16 1/4	14 5/8	13/16

Fan Size	P	R	S	T	U	V	W	X 100% Width	X 66% Width	Y	Z	AA 100% Width	AA 66% Width
12	9 3/4	12 1/4	12 7/8	19 1/2	20 3/4	9/16 x 1	6	36 11/16	36	19 5/8	–	14 1/16	13 3/8
15	9 3/4	16 3/8	16 1/8	19 1/2	20 3/4	9/16 x 1	6	39 1/16	37 5/8	19 5/8	–	16 7/16	15
18	10 1/2	19 3/8	19 3/8	21	22 1/4	9/16 x 1	6	46 1/8	44 3/8	25 1/4	–	17 7/8	16 1/8
22	11 1/8	23 3/4	23 11/16	22 1/4	23 1/2	9/16 x 1	6	49 1/4	47 1/8	25 1/4	–	21	18 7/8
24	10 1/2	25 3/4	25 3/4	21	22 1/4	9/16 x 1	6	50 3/4	48 1/2	25 1/4	–	22 1/2	20 1/4
27	13 3/16	28 5/8	29	26 3/8	28	11/16 x 1 1/2	8	58	55 7/16	29 5/8	14 13/16	25 3/8	22 13/16
30	13 7/8	31 1/16	31 1/2	27 3/4	29 3/8	11/16 x 1 1/2	8	63 3/16	60 7/16	33	16 1/2	27 3/16	24 7/16
33	13 7/8	34 1/16	34 11/16	27 3/4	29 3/8	11/16 x 1 1/2	8	65 9/16	62 1/2	33	16 1/2	29 9/16	26 1/2
36	13 7/8	37 1/16	37 13/16	27 3/4	29 3/8	11/16 x 1 1/2	8	67 13/16	64 1/2	33	16 1/2	31 13/16	28 1/2

Fan Size	BB 100% Width	BB 66% Width	CC 100% Width	CC 66% Width	DD 100% Width	DD 66% Width	EE	FF 100% Width	FF 66% Width
12	37 5/8	37	9 5/16	8 11/16	8 1/8	7 13/16	18 1/8	14 3/8	13 1/2
15	40 1/8	38 5/8	11 11/16	10 5/16	9 5/16	8 1/2	21 1/16	16 5/8	15 1/4
18	47 1/16	45 3/8	14	12 5/16	10 9/16	9 11/16	24 1/2	19 1/16	17 3/8
22	50 3/16	48 1/8	17 1/8	15 1/16	12 1/8	11 1/16	28 3/4	22 1/4	20 3/16
24	51 3/4	49 1/2	18 11/16	16 3/8	12 15/16	11 3/4	30 13/16	23 11/16	21 1/2
27	59	56 1/2	21	18 1/2	14 5/16	13 1/16	36	28	25 1/2
30	64 3/16	61 1/2	22 13/16	20 1/8	15 1/4	13 7/8	38 1/2	29 13/16	27 1/8
33	66 9/16	63 9/16	25 1/8	22 1/8	16 7/16	14 15/16	41 5/8	32 1/8	29 1/8
36	68 13/16	65 9/16	27 7/16	24 1/8	17 9/16	15 15/16	44 13/16	34 3/8	31 1/8

Dimensions and specifications are subject to change. Clockwise Rortatiom is shown. Certified prints are available.

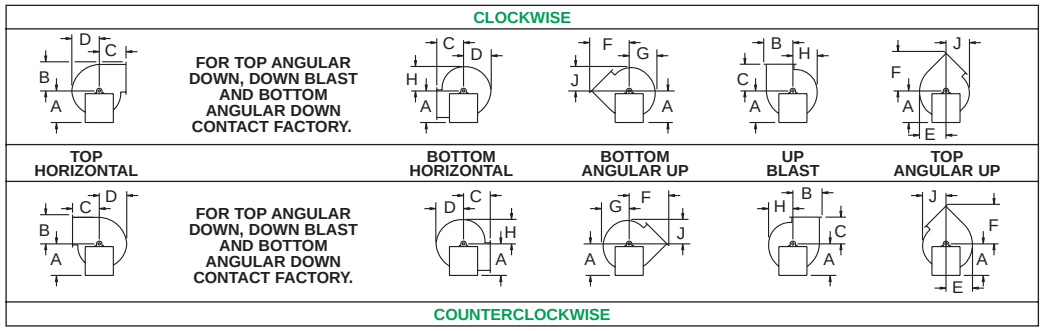

Fan Discharges

Scrolls are rotatable. BH and BAU rotations require a 3" tall height adjusting sub-base. TAD, BAD and DB discharge must have discharge extension. Contact factory.

Performance Data

Class I | Class II | Class III

A41-_-12_FA100FG_ _ _ _or A41PO-122FA100FG_ _ _ _

Wheel Diameter: 12.25 in.
Outlet Area: 0.87 sq. ft.

CFM	Outlet Velocity FPM	Static Pressure 1" RPM	1" BHP	2" RPM	2" BHP	3" RPM	3" BHP	4" RPM	4" BHP	5" RPM	5" BHP	6" RPM	6" BHP	8" RPM	8" BHP	10" RPM	10" BHP
1000	1149	1691	0.27	**2078**	**0.50**	**2418**	**0.75**										
1200	1379	1873	0.36	2219	0.61	**2529**	**0.89**	**2814**	**1.20**	3083	1.54						
1400	1609	2066	0.48	2379	0.76	**2665**	**1.06**	**2929**	**1.39**	**3177**	**1.74**	**3414**	**2.12**				
1600	1839	2260	0.62	2557	0.93	2819	1.26	**3066**	**1.61**	**3297**	**1.98**	**3517**	**2.38**	**3934**	**3.23**	4324	4.18
1800	2069	2451	0.78	2747	1.15	2987	1.50	3218	1.87	**3436**	**2.27**	**3643**	**2.69**	**4034**	**3.57**	**4404**	**4.54**
2000	2299	2646	0.98	2941	1.39	3169	1.77	3382	2.17	3588	2.60	**3784**	**3.04**	**4155**	**3.97**	**4504**	**4.96**
2200	2529	2846	1.21	3137	1.67	3359	2.10	3558	2.52	3751	2.97	3937	3.43	**4291**	**4.41**		
2400	2759	3052	1.48	3326	1.97	3554	2.46	3745	2.92	3924	3.38	4100	3.87	4437	4.91		
2600	2989	3263	1.80	3518	2.32	3750	2.87	3937	3.37	4109	3.86	4272	4.37				
2800	3218	3477	2.18	3714	2.70	3941	3.30	4131	3.86	4298	4.40	4456	4.93				
3000	3448	3694	2.61	3913	3.14	4132	3.78	4328	4.41	4492	4.98						
3200	3678	3912	3.10	4115	3.64	4324	4.30	4520	4.99								

A41-_-12_ FA-66FG_ _ _ _or A41PO-122FA-66FG_ _ _ _

Wheel Diameter: 12.25 in.
Outlet Area: 0.73 sq. ft.

CFM	Outlet Velocity FPM	Static Pressure 2" RPM	2" BHP	3" RPM	3" BHP	4" RPM	4" BHP	5" RPM	5" BHP	6" RPM	6" BHP	8" RPM	8" BHP	10" RPM	10" BHP	12" RPM	12" BHP
800	1096	**2144**	**0.46**	**2472**	**0.71**	2777	1.00	3062	1.31	3328	1.66						
1000	1370	2359	0.62	**2646**	**0.87**	**2914**	**1.17**	3168	1.50	3412	1.85	3868	2.64				
1200	1644	2593	0.81	2861	1.11	**3101**	**1.40**	**3329**	**1.74**	**3549**	**2.11**	3966	2.92	4359	3.83	4729	4.81
1400	1918	2838	1.03	3094	1.39	3320	1.73	**3528**	**2.07**	**3728**	**2.44**	**4109**	**3.28**	4470	4.21	4818	5.21
1600	2192	3095	1.29	3333	1.70	3553	2.11	3751	2.49	3937	2.88	**4288**	**3.72**	**4623**	**4.66**	**4943**	**5.70**
1800	2466	3362	1.59	3583	2.05	3791	2.51	3985	2.97	4164	3.41	4494	4.28	**4805**	**5.23**	**5105**	**6.28**
2000	2740	3637	1.95	3843	2.46	4038	2.97	4224	3.48	4399	3.99	4718	4.96	**5011**	**5.94**	**5291**	**6.98**
2200	3014	3918	2.38	4112	2.92	4294	3.48	4470	4.04	4638	4.60	4951	5.72	5233	6.77		
2400	3288	4205	2.89	4386	3.45	4558	4.05	4724	4.67	4884	5.28	5187	6.50				
2600	3562	4494	3.48	4666	4.06	4829	4.69	4986	5.35	5137	6.02						
2800	3836	4788	4.17	4950	4.76	5104	5.42	5254	6.11								
3000	4110	5084	4.96	5237	5.56												

A41-_-15_ FA100FG_ _ _ _or A41PO-152FA100FG_ _ _ _

Wheel Diameter: 15.375 in.
Outlet Area: 1.3 sq. ft.

CFM	Outlet Velocity FPM	Static Pressure 1" RPM	1" BHP	2" RPM	2" BHP	3" RPM	3" BHP	4" RPM	4" BHP	5" RPM	5" BHP	6" RPM	6" BHP	8" RPM	8" BHP	10" RPM	10" BHP
1500	1154	1316	0.38	**1615**	**0.68**	**1874**	**1.03**										
1800	1385	1462	0.51	1725	0.85	**1965**	**1.22**	**2184**	**1.64**	**2384**	**2.08**						
2100	1615	1615	0.68	1852	1.05	2073	1.46	**2277**	**1.90**	**2467**	**2.38**	**2645**	**2.88**				
2400	1846	1758	0.87	1995	1.30	2193	1.75	**2384**	**2.22**	**2563**	**2.73**	**2733**	**3.26**	**3047**	**4.39**		
2700	2077	1894	1.08	2146	1.60	2326	2.08	2503	2.59	**2671**	**3.13**	**2832**	**3.69**	**3134**	**4.89**	**3411**	**6.17**
3000	2308	2038	1.34	2300	1.95	2473	2.48	2632	3.02	2791	3.59	2943	4.19	**3230**	**5.45**	**3498**	**6.79**
3300	2538	2193	1.66	2444	2.33	2625	2.93	2774	3.51	2919	4.12	3063	4.75	**3336**	**6.07**	**3593**	**7.48**
3600	2769	2358	2.04	2578	2.73	2779	3.45	2924	4.08	3058	4.71	3191	5.38	3451	6.77		
3900	3000	2526	2.48	2716	3.19	2929	4.01	3077	4.71	3206	5.39	3328	6.08	3574	7.55		
4200	3231	2697	3.00	2861	3.71	3064	4.59	3231	5.41	3358	6.15	3476	6.88				
4500	3462	2870	3.59	3013	4.31	3199	5.22	3381	6.17	3511	6.98						
4800	3692	3044	4.25	3174	5.01	3338	5.92	3516	6.93								

A41-_-15_ FA-66FG_ _ _ _or A41PO-152FA-66FG_ _ _ _

Wheel Diameter: 15.375 in.
Outlet Area: 1.15 sq. ft.

CFM	Outlet Velocity FPM	Static Pressure 2" RPM	2" BHP	3" RPM	3" BHP	4" RPM	4" BHP	5" RPM	5" BHP	6" RPM	6" BHP	8" RPM	8" BHP	10" RPM	10" BHP	12" RPM	12" BHP
800	696	1512	0.38														
1200	1043	**1642**	**0.54**	**1913**	**0.82**	2155	1.12	2375	1.46	2578	1.83						
1600	1391	1820	0.75	**2064**	**1.09**	**2284**	**1.44**	**2487**	**1.82**	**2676**	**2.21**	3023	3.06	3338	4.00		
2000	1739	2026	1.03	2248	1.42	**2451**	**1.83**	**2637**	**2.26**	**2812**	**2.71**	**3137**	**3.64**	**3436**	**4.63**	3713	5.69
2400	2087	2250	1.39	2454	1.84	2641	2.31	2815	2.79	**2979**	**3.29**	**3283**	**4.33**	**3564**	**5.43**	**3827**	**6.56**
2800	2435	2487	1.84	2676	2.35	2849	2.88	3012	3.42	3166	3.98	**3453**	**5.13**	**3718**	**6.33**	**3967**	**7.58**
3200	2783	2734	2.40	2909	2.97	3071	3.56	3223	4.16	3368	4.77	3640	6.04	**3892**	**7.35**	**4129**	**8.71**
3600	3130	2989	3.08	3150	3.71	3303	4.37	3446	5.03	3583	5.70	3840	7.08	4080	8.51	**4307**	**9.98**
4000	3478	3250	3.90	3400	4.59	3542	5.31	3678	6.04	3807	6.77	4051	8.27	4280	9.81		
4400	3826	3517	4.88	3655	5.63	3788	6.40	3916	7.19	4040	7.99	4272	9.61				
4800	4174	3787	6.04	3915	6.84	4040	7.66	4161	8.51	4278	9.38						
5200	4522	4060	7.39	4181	8.24	4298	9.12										

Performance shown is for installation Type D: ducted inlet/ducted outlet. Power rating (BHP) does not include drive losses. Performance data is based on standard air conditions (0.075 #/ft.3). Performance ratings do not include the effects of appurtenances in the airstream. MOST EFFICIENT FAN SELECTION APPEARS IN BOLD PRINT. To complete model code, add arrangement, class of construction, motor enclosure code, motor horsepower code and motor speed code. Refer to page 2 for more information.

Performance Data

Class I | Class II | Class III

A41-_-18_ FA100FG_ _ _ _or A41PO-182FA100FG_ _ _ _

Wheel Diameter: 18.5 in.
Outlet Area: 1.88 sq. ft.

CFM	Outlet Velocity FPM	Static Pressure 1" RPM	1" BHP	2" RPM	2" BHP	3" RPM	3" BHP	4" RPM	4" BHP	5" RPM	5" BHP	6" RPM	6" BHP	8" RPM	8" BHP	10" RPM	10" BHP
2000	1064	1030	0.46	**1288**	**0.85**	1530	1.34										
2500	1330	1154	0.64	1383	1.10	**1586**	**1.60**	**1781**	**2.17**	1970	2.81						
3000	1596	1288	0.87	1496	1.40	**1681**	**1.97**	**1851**	**2.57**	**2013**	**3.21**	**2176**	**3.93**				
3500	1862	1417	1.15	1622	1.77	1792	2.40	1949	3.07	**2096**	**3.76**	**2237**	**4.48**	**2516**	**6.10**	2784	7.91
4000	2128	1544	1.47	1756	2.22	1912	2.91	2059	3.65	2197	4.41	**2328**	**5.18**	**2577**	**6.83**	**2821**	**8.67**
4500	2394	1680	1.87	1892	2.75	2043	3.53	2179	4.31	2309	5.14	2433	5.99	**2665**	**7.74**	**2885**	**9.60**
5000	2660	1826	2.37	2017	3.31	2178	4.24	2307	5.09	2428	5.97	2545	6.89	2767	8.79	**2973**	**10.7**
5500	2926	1978	2.97	2143	3.95	2314	5.04	2441	5.99	2556	6.93	2666	7.90	2876	9.93		
6000	3191	2133	3.69	2275	4.68	2439	5.87	2576	6.99	2689	8.02	2793	9.05	2993	11.2		
6500	3457	2290	4.52	2414	5.54	2564	6.78	2711	8.09	2824	9.23	2926	10.3				
7000	3723	2449	5.49	2561	6.55	2693	7.81	2835	9.21	2959	10.6						
7500	3989	2609	6.59	2712	7.70	2828	8.97	2960	10.4								

A41-_-18_ FA-66FG_ _ _ _or A41PO-182FA-66FG_ _ _ _

Wheel Diameter: 18.5 in.
Outlet Area: 1.66 sq. ft.

CFM	Outlet Velocity FPM	Static Pressure 2" RPM	2" BHP	3" RPM	3" BHP	4" RPM	4" BHP	5" RPM	5" BHP	6" RPM	6" BHP	8" RPM	8" BHP	10" RPM	10" BHP	12" RPM	12" BHP
1500	904	**1315**	**0.68**	1542	1.06	1750	1.48										
2000	1205	**1442**	**0.91**	**1649**	**1.36**	**1832**	**1.83**	2002	2.34	2161	2.87						
2500	1506	1584	1.20	**1779**	**1.72**	**1952**	**2.26**	**2109**	**2.84**	**2255**	**3.43**	2527	4.69	2780	6.04	3023	7.50
3000	1807	1741	1.57	1921	2.14	**2086**	**2.76**	**2236**	**3.41**	**2374**	**4.07**	**2630**	**5.47**	**2864**	**6.93**	3084	8.48
3500	2108	1911	2.03	2076	2.67	2229	3.34	**2372**	**4.06**	**2507**	**4.80**	**2751**	**6.34**	**2974**	**7.95**	**3182**	**9.62**
4000	2410	2089	2.60	2241	3.31	2384	4.05	2518	4.81	2646	5.62	**2883**	**7.31**	**3098**	**9.06**	**3297**	**10.9**
4500	2711	2273	3.29	2415	4.08	2548	4.88	2674	5.71	2794	6.56	3021	8.38	**3231**	**10.3**	**3424**	**12.2**
5000	3012	2464	4.11	2595	4.97	2720	5.86	2838	6.75	2952	7.67	3167	9.58	3369	11.6	**3559**	**13.7**
5500	3313	2659	5.07	2780	6.01	2897	6.98	3009	7.96	3117	8.94	3321	11.0	3514	13.1		
6000	3614	2858	6.19	2970	7.22	3079	8.26	3185	9.31	3288	10.4	3482	12.5				
6500	3916	3060	7.49	3164	8.60	3267	9.71	3366	10.8	3463	12.0						
7000	4217	3264	8.99	3362	10.2	3457	11.4	3551	12.6								

A41-_-22_ FA100FG_ _ _ _or A41PO-222FA100FG_ _ _ _

Wheel Diameter: 22.625 in.
Outlet Area: 2.81 sq. ft.

CFM	Outlet Velocity FPM	Static Pressure 1" RPM	1" BHP	2" RPM	2" BHP	3" RPM	3" BHP	4" RPM	4" BHP	5" RPM	5" BHP	6" RPM	6" BHP	8" RPM	8" BHP	10" RPM	10" BHP
3200	1139	843	0.70	**1051**	**1.30**	1253	2.02										
4000	1423	931	0.95	1131	1.67	**1294**	**2.43**	**1455**	**3.29**	1616	4.25						
4800	1708	1027	1.28	1225	2.14	**1374**	**2.99**	**1511**	**3.90**	**1643**	**4.87**	**1779**	**5.95**				
5600	1993	1144	1.73	1311	2.65	1467	3.67	1593	4.66	**1711**	**5.71**	**1826**	**6.81**	**2056**	**9.23**	2284	11.9
6400	2278	1266	2.30	1400	3.25	1558	4.42	1686	5.57	1796	6.70	**1901**	**7.88**	**2103**	**10.4**	**2303**	**13.1**
7200	2562	1393	2.99	1511	4.03	1642	5.22	1780	6.57	1890	7.85	1990	9.12	**2176**	**11.8**	**2354**	**14.6**
8000	2847	1520	3.82	1629	4.99	1736	6.18	1862	7.60	1985	9.11	2084	10.5	2261	13.4	**2428**	**16.3**
8800	3132	1650	4.81	1752	6.11	1848	7.38	1950	8.77	2067	10.4	2178	12.0	2355	15.1		
9600	3416	1781	5.97	1877	7.40	1966	8.78	2054	10.2	2153	11.8	2260	13.6				
10400	3701	1914	7.31	2004	8.89	2087	10.4	2169	11.9	2251	13.5	2346	15.2				
11200	3986	2047	8.86	2132	10.6	2211	12.2	2287	13.8	2363	15.5	2440	17.2				
12000	4270	2181	10.6	2261	12.5	2337	14.2	2409	16.0								

A41-_-22_ FA-66FG_ _ _ _or A41PO-222FA-66FG_ _ _ _

Wheel Diameter: 22.625 in.
Outlet Area: 2.48 sq. ft.

CFM	Outlet Velocity FPM	Static Pressure 2" RPM	2" BHP	3" RPM	3" BHP	4" RPM	4" BHP	5" RPM	5" BHP	6" RPM	6" BHP	8" RPM	8" BHP	10" RPM	10" BHP	12" RPM	12" BHP
2800	1129	**1131**	**1.19**	**1308**	**1.80**	**1461**	**2.42**	1603	3.10								
3500	1411	1230	1.54	**1394**	**2.24**	**1542**	**2.98**	**1675**	**3.75**	**1797**	**4.53**	2025	6.22				
4200	1694	1343	1.96	1494	2.75	**1631**	**3.59**	**1759**	**4.47**	**1878**	**5.38**	**2092**	**7.22**	2288	9.17		
4900	1976	1465	2.48	1604	3.36	1732	4.29	**1852**	**5.26**	**1965**	**6.26**	**2175**	**8.36**	**2362**	**10.5**	**2535**	**12.7**
5600	2258	1590	3.10	1723	4.09	1843	5.10	1955	6.16	**2062**	**7.25**	**2262**	**9.54**	**2446**	**11.9**	**2616**	**14.4**
6300	2540	1718	3.82	1847	4.93	1961	6.05	2067	7.19	2167	8.37	**2357**	**10.8**	**2534**	**13.4**	**2699**	**16.1**
7000	2823	1853	4.68	1973	5.89	2084	7.13	2185	8.37	2280	9.64	2460	12.3	**2629**	**15.0**	**2788**	**17.9**
7700	3105	1993	5.69	2102	6.99	2209	8.35	2307	9.70	2398	11.1	2570	13.9	2732	16.8	**2884**	**19.9**
8400	3387	2139	6.89	2236	8.25	2336	9.70	2433	11.2	2521	12.7	2686	15.7	2840	18.8		
9100	3669	2287	8.28	2374	9.71	2466	11.2	2558	12.8	2647	14.5	2806	17.7	2954	21.0		
9800	3952	2439	9.87	2517	11.4	2601	13.0	2687	14.6	2772	16.4	2929	19.8				
10500	4234	2591	11.7	2664	13.3	2740	14.9	2820	16.7	2900	18.5						

Performance shown is for installation Type D: ducted inlet/ducted outlet. Power rating (BHP) does not include drive losses. Performance data is based on standard air conditions (0.075 #/ft.3). Performance ratings do not include the effects of appurtenances in the airstream. MOST EFFICIENT FAN SELECTION APPEARS IN BOLD PRINT. To complete model code, add arrangement, class of construction, motor enclosure code, motor horsepower code and motor speed code. Refer to page 2 for more information.

Performance Data

Class I | Class II | Class III

A41-_-24_FA100FG_ _ _ _or A41PO-242FA100FG_ _ _ _

Wheel Diameter: 24.625 in.
Outlet Area: 3.33 sq. ft.

CFM	Outlet Velocity FPM	Static Pressure 1" RPM	1" BHP	2" RPM	2" BHP	3" RPM	3" BHP	4" RPM	4" BHP	5" RPM	5" BHP	6" RPM	6" BHP	8" RPM	8" BHP	10" RPM	10" BHP
3000	901	**706**	**0.61**	939	1.27												
4000	1201	794	0.89	**980**	**1.62**	**1155**	**2.48**										
5000	1502	877	1.22	1062	2.12	**1207**	**3.05**	**1346**	**4.07**	1488	5.22						
6000	1802	978	1.67	1154	2.73	1290	3.79	**1411**	**4.90**	**1528**	**6.08**	**1643**	**7.35**	1878	10.2		
7000	2102	1094	2.29	1234	3.39	1382	4.69	1496	5.92	**1601**	**7.19**	**1702**	**8.53**	**1900**	**11.4**	2103	14.7
8000	2402	1214	3.07	1330	4.23	1465	5.64	1588	7.11	1688	8.52	**1781**	**9.96**	**1960**	**13.0**	**2132**	**16.2**
9000	2703	1338	4.01	1442	5.32	1549	6.72	1673	8.38	1781	10.0	1871	11.6	**2037**	**14.8**	**2195**	**18.3**
10000	3003	1463	5.15	1559	6.61	1651	8.08	1754	9.75	1865	11.6	1964	13.5	2125	17.0		
11000	3303	1589	6.50	1679	8.14	1763	9.73	1848	11.4	1946	13.3	2047	15.3	2217	19.3		
12000	3604	1717	8.10	1802	9.91	1880	11.6	1956	13.4	2035	15.2	2128	17.4				
13000	3904	1846	9.95	1926	11.9	1999	13.8	2070	15.7	2141	17.6	2216	19.7				
14000	4204	1976	12.1	2050	14.2	2121	16.3	2188	18.3								

A41-_-24_FA-66FG_ _ _ _or A41PO-242FA-66FG_ _ _ _

Wheel Diameter: 24.625 in.
Outlet Area: 2.94 sq. ft.

CFM	Outlet Velocity FPM	Static Pressure 2" RPM	2" BHP	3" RPM	3" BHP	4" RPM	4" BHP	5" RPM	5" BHP	6" RPM	6" BHP	8" RPM	8" BHP	10" RPM	10" BHP	12" RPM	12" BHP
3000	1020	**1008**	**1.28**	**1173**	**1.94**	1320	2.65										
4000	1361	**1113**	**1.74**	**1266**	**2.55**	**1403**	**3.42**	**1525**	**4.29**	**1639**	**5.21**						
5000	1701	1237	2.34	1375	3.28	**1501**	**4.28**	**1618**	**5.32**	**1728**	**6.40**	**1924**	**8.60**	**2104**	**10.9**		
6000	2041	1373	3.10	1499	4.17	1615	5.30	**1723**	**6.47**	**1826**	**7.68**	**2016**	**10.2**	**2189**	**12.8**	**2346**	**15.5**
7000	2381	1512	4.03	1633	5.26	1740	6.52	1841	7.82	**1936**	**9.16**	**2116**	**12.0**	**2282**	**14.9**	**2437**	**17.9**
8000	2721	1658	5.16	1772	6.56	1874	7.97	1968	9.40	2058	10.9	**2226**	**13.9**	**2384**	**17.1**	**2532**	**20.4**
9000	3061	1812	6.56	1913	8.08	2013	9.67	2103	11.3	2187	12.9	2346	16.2	**2496**	**19.6**	**2637**	**23.2**
10000	3401	1973	8.25	2062	9.87	2153	11.6	2242	13.4	2323	15.1	2474	18.7	2616	22.4		
11000	3741	2138	10.3	2216	12.0	2298	13.8	2381	15.7	2462	17.7	2608	21.6				
12000	4082	2306	12.7	2376	14.5	2450	16.4	2526	18.5	2602	20.5						
13000	4422	2477	15.4	2540	17.4	2606	19.4	2675	21.5								
14000	4762	2649	18.6	2707	20.7												

A41-_-27_FA100FG_ _ _ _or A41PO-272FA100FG_ _ _ _

Wheel Diameter: 27.625 in.
Outlet Area: 4.22 sq. ft.

CFM	Outlet Velocity FPM	Static Pressure 1" RPM	1" BHP	2" RPM	2" BHP	3" RPM	3" BHP	4" RPM	4" BHP	5" RPM	5" BHP	6" RPM	6" BHP	8" RPM	8" BHP	10" RPM	10" BHP
4800	1137	687	1.05	**857**	**1.95**	1019	3.01										
6000	1422	762	1.45	921	2.52	**1055**	**3.66**	**1186**	**4.93**	1313	6.32						
7200	1706	835	1.93	999	3.24	1119	4.51	**1231**	**5.87**	**1339**	**7.32**	**1449**	**8.91**				
8400	1991	929	2.58	1073	4.06	1196	5.55	1297	7.04	**1394**	**8.60**	**1488**	**10.2**	**1675**	**13.8**	1856	17.8
9600	2275	1028	3.41	1143	4.95	1276	6.75	1375	8.42	1463	10.1	**1549**	**11.9**	**1714**	**15.6**	**1877**	**19.7**
10800	2559	1130	4.42	1228	6.08	1343	7.99	1455	9.99	1541	11.9	1621	13.8	**1773**	**17.7**	**1919**	**21.9**
12000	2844	1234	5.64	1323	7.46	1415	9.40	1525	11.6	1621	13.8	1700	15.9	1842	20.2	**1978**	**24.6**
13200	3128	1340	7.08	1422	9.08	1502	11.1	1593	13.4	1693	15.9	1780	18.3	1919	22.9		
14400	3412	1446	8.78	1524	11.0	1597	13.2	1671	15.4	1760	18.0	1851	20.8	1999	25.9		
15600	3697	1554	10.8	1627	13.1	1695	15.5	1762	17.9	1834	20.5	1918	23.3				
16800	3981	1662	13.0	1731	15.6	1795	18.1	1858	20.7	1921	23.3	1990	26.2				
18000	4265	1771	15.6	1836	18.3	1897	21.1	1956	23.8								

A41-_-27_FA-66FG_ _ _ _or A41PO-272FA-66FG_ _ _ _

Wheel Diameter: 27.625 in.
Outlet Area: 3.73 sq. ft.

CFM	Outlet Velocity FPM	Static Pressure 2" RPM	2" BHP	3" RPM	3" BHP	4" RPM	4" BHP	5" RPM	5" BHP	6" RPM	6" BHP	8" RPM	8" BHP	10" RPM	10" BHP	12" RPM	12" BHP
3600	965	**870**	**1.50**	1026	2.31												
4800	1287	959	2.06	**1091**	**2.99**	**1213**	**4.00**	**1330**	**5.09**								
6000	1609	1065	2.80	1185	3.89	**1293**	**5.03**	**1395**	**6.23**	**1492**	**7.49**	**1679**	**10.2**				
7200	1930	1169	3.73	1291	5.00	1392	6.29	**1485**	**7.63**	**1573**	**9.02**	**1739**	**12.0**	**1898**	**15.1**	2051	18.5
8400	2252	1281	4.86	1395	6.34	1499	7.81	1587	9.31	1669	10.8	**1823**	**14.1**	**1967**	**17.4**	**2106**	**21.0**
9600	2574	1405	6.22	1503	7.91	1602	9.60	1694	11.3	1773	13.0	1919	16.5	**2054**	**20.1**	**2182**	**23.9**
10800	2895	1536	7.85	1620	9.75	1709	11.7	1797	13.5	1881	15.4	2022	19.3	2151	23.2	**2272**	**27.3**
12000	3217	1669	9.80	1747	11.9	1823	14.0	1904	16.1	1984	18.2	2130	22.4	2255	26.7	2370	31.1
13200	3539	1806	12.1	1878	14.4	1947	16.7	2017	19.0	2091	21.3	2234	26.0	2362	30.6		
14400	3861	1943	14.8	2011	17.2	2076	19.7	2140	22.2	2204	24.8	2338	29.9				
15600	4182	2082	17.9	2147	20.5	2208	23.2	2267	25.9	2326	28.7						
16800	4504	2222	21.5	2284	24.3	2342	27.1	2398	30.0								

Performance shown is for installation Type D: ducted inlet/ducted outlet. Power rating (BHP) does not include drive losses. Performance data is based on standard air conditions (0.075 #/ft.3). Performance ratings do not include the effects of appurtenances in the airstream. MOST EFFICIENT FAN SELECTION APPEARS IN BOLD PRINT. To complete model code, add arrangement, class of construction, motor enclosure code, motor horsepower code and motor speed code. Refer to page 2 for more information.

Performance Data

Class I | Class II | Class III

A41-_-30_FA100FG_ _ _ _or A41PO-302FA100FG_ _ _ _

Wheel Diameter: 30.0 in.
Outlet Area: 4.98 sq. ft.

CFM	Outlet Velocity FPM	Static Pressure 1" RPM	1" BHP	2" RPM	2" BHP	3" RPM	3" BHP	4" RPM	4" BHP	5" RPM	5" BHP	6" RPM	6" BHP	8" RPM	8" BHP	10" RPM	10" BHP
6000	1205	651	1.35	**801**	**2.45**	**943**	**3.71**										
7500	1506	721	1.87	869	3.21	**987**	**4.59**	**1101**	**6.11**	**1214**	**7.79**	1322	9.58				
9000	1807	799	2.53	947	4.16	1055	5.74	**1154**	**7.39**	**1249**	**9.14**	**1344**	**11.0**	1530	15.1		
10500	2108	893	3.43	1014	5.20	1132	7.12	1224	8.95	**1309**	**10.9**	**1392**	**12.8**	**1554**	**17.1**	**1716**	**21.9**
12000	2410	992	4.56	1087	6.43	1205	8.65	1301	10.8	1381	12.9	1457	15.0	**1603**	**19.6**	**1744**	**24.4**
13500	2711	1093	5.96	1178	8.01	1271	10.3	1376	12.8	1459	15.2	1531	17.6	**1666**	**22.4**	**1795**	**27.5**
15000	3012	1195	7.64	1273	9.90	1349	12.3	1441	14.9	1534	17.8	1609	20.4	1738	25.7		
16500	3313	1298	9.64	1371	12.1	1440	14.7	1513	17.3	1599	20.4	1684	23.5	1815	29.3		
18000	3614	1403	12.0	1471	14.7	1535	17.4	1599	20.3	1669	23.3	1748	26.6				
19500	3916	1508	14.7	1573	17.7	1632	20.6	1691	23.6	1750	26.7	1817	30.1				
21000	4217	1615	17.9	1675	21.1	1732	24.3	1786	27.4	1841	30.7						
22500	4518	1722	21.5	1778	24.9	1833	28.3										

A41-_-30_FA-66FG_ _ _ _or A41PO-302FA-66FG_ _ _ _

Wheel Diameter: 30.0 in.
Outlet Area: 4.39 sq. ft.

CFM	Outlet Velocity FPM	Static Pressure 2" RPM	2" BHP	3" RPM	3" BHP	4" RPM	4" BHP	5" RPM	5" BHP	6" RPM	6" BHP	8" RPM	8" BHP	10" RPM	10" BHP	12" RPM	12" BHP
4500	1025	**814**	**1.87**	**952**	**2.85**												
6000	1367	906	2.62	**1024**	**3.76**	**1132**	**4.98**	**1236**	**6.30**	1335	7.69						
7500	1708	1010	3.61	1120	4.95	**1217**	**6.34**	**1308**	**7.81**	**1394**	**9.34**	**1560**	**12.6**				
9000	2050	1112	4.85	1224	6.43	1316	8.03	1400	9.67	**1479**	**11.4**	**1628**	**14.9**	**1768**	**18.8**	**1904**	**22.8**
10500	2392	1226	6.37	1325	8.22	1421	10.1	1502	11.9	1577	13.8	**1714**	**17.7**	**1843**	**21.8**	**1967**	**26.2**
12000	2733	1351	8.21	1434	10.3	1522	12.4	1606	14.5	1681	16.7	1812	21.0	**1933**	**25.4**	**2048**	**30.1**
13500	3075	1480	10.4	1555	12.8	1629	15.2	1707	17.6	1783	19.9	1916	24.7	2031	29.5	2140	34.5
15000	3417	1612	13.1	1681	15.7	1747	18.3	1815	21.0	1885	23.6	2019	28.9	2135	34.2		
16500	3759	1746	16.3	1810	19.1	1871	22.0	1931	24.9	1993	27.8	2120	33.6				
18000	4100	1881	20.0	1942	23.1	1999	26.1	2054	29.3	2109	32.5	2225	38.8				
19500	4442	2018	24.4	2075	27.6	2129	30.9	2181	34.3								
21000	4784	2155	29.3	2209	32.8												

A41-_-33_FA100FG_ _ _ _or A41PO-332FA100FG_ _ _ _

Wheel Diameter: 33.0 in.
Outlet Area: 6.02 sq. ft.

CFM	Outlet Velocity FPM	Static Pressure 1" RPM	1" BHP	2" RPM	2" BHP	3" RPM	3" BHP	4" RPM	4" BHP	5" RPM	5" BHP	6" RPM	6" BHP	8" RPM	8" BHP	10" RPM	10" BHP
6000	997	543	1.26	**701**	**2.47**												
8000	1329	620	1.88	**752**	**3.31**	**869**	**4.88**	**986**	**6.67**								
10000	1661	688	2.63	826	4.44	**927**	**6.22**	**1023**	**8.14**	**1116**	**10.2**	**1210**	**12.4**				
12000	1993	778	3.70	899	5.80	1002	7.93	1086	10.1	**1168**	**12.3**	**1246**	**14.6**	**1402**	**19.7**	1554	25.4
14000	2326	875	5.10	968	7.32	1079	9.94	1162	12.4	1236	14.8	**1307**	**17.4**	**1443**	**22.8**	**1576**	**28.6**
16000	2658	976	6.87	1055	9.31	1144	12.1	1240	15.1	1313	17.9	1379	20.7	**1503**	**26.4**	**1622**	**32.6**
18000	2990	1078	9.06	1150	11.8	1220	14.6	1305	17.9	1390	21.3	1457	24.4	1575	30.7		
20000	3322	1182	11.7	1248	14.7	1311	17.8	1376	21.0	1455	24.7	1532	28.5	1652	35.5		
22000	3654	1287	14.9	1349	18.2	1406	21.5	1463	25.0	1525	28.6	1597	32.7				
24000	3987	1393	18.6	1450	22.3	1504	25.9	1556	29.6	1609	33.3	1667	37.4				
26000	4319	1499	23.0	1553	27.0	1604	30.9	1653	34.8								
28000	4651	1607	28.1	1657	32.3												

A41-_-33_FA-66FG_ _ _ _or A41PO-332FA-66FG_ _ _ _

Wheel Diameter: 33.0 in.
Outlet Area: 5.32 sq. ft.

CFM	Outlet Velocity FPM	Static Pressure 2" RPM	2" BHP	3" RPM	3" BHP	4" RPM	4" BHP	5" RPM	5" BHP	6" RPM	6" BHP	8" RPM	8" BHP	10" RPM	10" BHP	12" RPM	12" BHP
6000	1128	**763**	**2.51**	**882**	**3.75**	993	5.12										
7500	1410	836	3.31	**941**	**4.72**	**1038**	**6.23**	**1130**	**7.84**	**1219**	**9.55**						
9000	1692	914	4.32	1014	5.92	**1103**	**7.60**	**1186**	**9.36**	**1265**	**11.2**	**1416**	**15.2**				
10500	1974	991	5.52	1093	7.36	1177	9.24	1254	11.2	**1327**	**13.2**	**1464**	**17.4**	**1595**	**22.0**	**1722**	**26.8**
12000	2256	1073	6.95	1169	9.06	1255	11.2	1329	13.3	1398	15.5	**1526**	**20.1**	**1647**	**24.9**	**1763**	**30.0**
13500	2538	1164	8.63	1247	11.0	1331	13.4	1408	15.7	1474	18.1	1596	23.1	**1710**	**28.3**	**1819**	**33.6**
15000	2820	1259	10.6	1332	13.2	1409	15.9	1484	18.5	1553	21.1	1672	26.5	1780	32.0	**1883**	**37.8**
16500	3102	1356	12.9	1423	15.8	1491	18.7	1561	21.6	1629	24.5	1750	30.3	1855	36.2	1953	42.3
18000	3383	1456	15.6	1518	18.7	1579	21.9	1642	25.0	1706	28.2	1828	34.5	1933	40.9		
19500	3665	1556	18.7	1615	22.0	1672	25.4	1727	28.9	1786	32.3	1903	39.1	2013	46.0		
21000	3947	1657	22.2	1713	25.8	1767	29.4	1819	33.1	1871	36.8	1981	44.2				
22500	4229	1759	26.2	1813	30.0	1864	33.8	1913	37.7	1961	41.7						

Performance shown is for installation Type D: ducted inlet/ducted outlet. Power rating (BHP) does not include drive losses. Performance data is based on standard air conditions (0.075 #/ft.3). Performance ratings do not include the effects of appurtenances in the airstream. MOST EFFICIENT FAN SELECTION APPEARS IN BOLD PRINT. To complete model code, add arrangement, class of construction, motor enclosure code, motor horsepower code and motor speed code. Refer to page 2 for more information.

Performance Data

Class I | Class II | Class III

A41-_-36_FA100FG_ _ _ _or A41PO-362FA100FG_ _ _ _

Wheel Diameter: 36.0 in.
Outlet Area: 7.17 sq. ft.

CFM	Outlet Velocity FPM	Static Pressure 1" RPM	1" BHP	2" RPM	2" BHP	3" RPM	3" BHP	4" RPM	4" BHP	5" RPM	5" BHP	6" RPM	6" BHP	8" RPM	8" BHP	10" RPM	10" BHP
10000	1395	565	2.43	684	4.15	**782**	**5.98**										
12000	1674	620	3.27	741	5.34	830	7.42	**913**	**9.59**	**995**	**12.0**						
14000	1953	688	4.35	796	6.76	887	9.14	963	11.6	**1034**	**14.1**	**1104**	**16.7**				
16000	2232	761	5.71	848	8.37	946	11.2	1020	13.9	1086	16.6	**1149**	**19.5**	**1271**	**25.5**		
18000	2510	837	7.39	911	10.3	996	13.4	1079	16.5	1143	19.6	1203	22.7	**1315**	**29.0**	**1423**	**35.9**
20000	2789	913	9.42	981	12.6	1050	15.9	1130	19.4	1202	22.9	1261	26.2	1367	33.2	**1467**	**40.3**
22000	3068	990	11.8	1054	15.2	1114	18.8	1182	22.6	1255	26.5	1320	30.2	1424	37.7	1519	45.4
24000	3347	1068	14.7	1128	18.3	1184	22.2	1239	26.2	1305	30.3	1372	34.6	1482	42.7		
26000	3626	1147	18.0	1204	21.9	1256	26.0	1307	30.2	1360	34.6	1423	39.2				
28000	3905	1226	21.8	1280	26.0	1330	30.3	1377	34.8	1424	39.4	1476	44.2				
30000	4184	1306	26.2	1357	30.6	1405	35.2	1449	39.9	1493	44.8	1538	49.8				
32000	4463	1386	31.2	1435	35.9	1481	40.7	1523	45.7								

A41-_-36_FA-66FG_ _ _ _or A41PO-362FA-66FG_ _ _ _

Wheel Diameter: 36.0 in.
Outlet Area: 6.33 sq. ft.

CFM	Outlet Velocity FPM	Static Pressure 2" RPM	2" BHP	3" RPM	3" BHP	4" RPM	4" BHP	5" RPM	5" BHP	6" RPM	6" BHP	8" RPM	8" BHP	10" RPM	10" BHP	12" RPM	12" BHP
6600	1043	**668**	**2.67**	**777**	**4.02**	879	5.49										
8800	1390	742	3.68	**841**	**5.36**	**930**	**7.11**	**1010**	**8.91**	**1087**	**10.8**						
11000	1738	824	5.02	916	6.94	**999**	**9.02**	**1074**	**11.1**	**1145**	**13.3**	**1274**	**17.8**	**1397**	**22.6**	1519	27.8
13200	2085	914	6.80	998	8.93	1076	11.2	**1148**	**13.7**	**1215**	**16.2**	**1337**	**21.3**	**1449**	**26.7**	**1554**	**32.1**
15400	2433	1010	8.90	1087	11.5	1159	14.0	1227	16.6	1290	19.4	**1408**	**25.2**	**1514**	**31.2**	**1615**	**37.3**
17600	2780	1110	11.4	1181	14.5	1248	17.4	1311	20.2	1371	23.1	1483	29.5	**1587**	**36.1**	**1682**	**42.9**
19800	3128	1215	14.4	1279	17.9	1341	21.3	1400	24.5	1457	27.7	1563	34.3	1663	41.5	**1756**	**49.0**
22000	3476	1322	18.1	1381	21.8	1438	25.6	1493	29.5	1547	33.0	1648	40.1	1743	47.6	1833	55.5
24200	3823	1432	22.5	1485	26.4	1538	30.6	1590	34.8	1640	39.0	1736	46.9	1827	54.7		
26400	4171	1544	27.6	1593	31.8	1641	36.2	1689	40.8	1737	45.4	1828	54.4				
28600	4518	1657	33.6	1702	38.1	1747	42.7	1792	47.6	1836	52.5						
30800	4866	1771	40.5	1813	45.2	1855	50.1										

A41-_-40_FA100FG_ _ _ _

Wheel Diameter: 40.25 in.
Outlet Area: 9.43 sq. ft.

CFM	Outlet Velocity FPM	Static Pressure 1" RPM	1" BHP	2" RPM	2" BHP	3" RPM	3" BHP	4" RPM	4" BHP	5" RPM	5" BHP	6" RPM	6" BHP	8" RPM	8" BHP	10" RPM	10" BHP
12500	1326	506	3.03	611	5.18	**700**	**7.47**										
15000	1591	554	4.09	663	6.68	743	9.27	**816**	**12.0**	**890**	**15.0**						
17500	1856	616	5.44	712	8.44	794	11.4	861	14.5	**924**	**17.6**	**987**	**20.9**				
20000	2121	681	7.14	758	10.5	846	14.0	912	17.3	971	20.8	**1027**	**24.3**	**1137**	**31.9**		
22500	2386	748	9.23	815	12.8	891	16.7	965	20.6	1023	24.4	1076	28.3	**1176**	**36.3**	**1273**	**44.8**
25000	2651	817	11.8	877	15.7	939	19.9	1011	24.3	1075	28.6	1128	32.8	1223	41.5	**1312**	**50.3**
27500	2916	886	14.8	942	19.0	996	23.5	1057	28.2	1122	33.1	1180	37.8	1273	47.1	1358	56.7
30000	3181	955	18.4	1009	22.9	1059	27.7	1108	32.7	1168	37.9	1227	43.2	1326	53.4		
32500	3446	1026	22.5	1077	27.4	1123	32.5	1169	37.8	1217	43.3	1272	49.0				
35000	3712	1097	27.3	1145	32.5	1189	37.9	1232	43.5	1274	49.3	1321	55.3				
37500	3977	1168	32.8	1214	38.3	1256	44.0	1296	49.9	1336	56.0	1375	62.3				
40000	4242	1240	39.0	1283	44.8	1324	50.9	1362	57.1								

A41-_-40_FA-66FG_ _ _ _

Wheel Diameter: 40.25 in.
Outlet Area: 8.34 sq. ft.

CFM	Outlet Velocity FPM	Static Pressure 2" RPM	2" BHP	3" RPM	3" BHP	4" RPM	4" BHP	5" RPM	5" BHP	6" RPM	6" BHP	8" RPM	8" BHP	10" RPM	10" BHP	12" RPM	12" BHP
10000	1199	**639**	**4.11**	**730**	**6.06**	**811**	**8.09**	**887**	**10.2**	962	12.5						
12500	1499	703	5.44	**788**	**7.74**	**864**	**10.1**	**934**	**12.6**	**998**	**15.2**	**1120**	**20.5**	1241	26.4		
15000	1799	773	7.22	852	9.72	924	12.5	**990**	**15.3**	**1051**	**18.2**	**1164**	**24.3**	**1268**	**30.5**	**1368**	**37.0**
17500	2098	848	9.42	921	12.2	989	15.2	1052	18.3	**1111**	**21.6**	**1218**	**28.4**	**1317**	**35.4**	**1408**	**42.5**
20000	2398	927	11.9	995	15.3	1058	18.5	1117	21.9	1173	25.4	**1277**	**32.9**	**1372**	**40.6**	**1460**	**48.5**
22500	2698	1010	14.9	1072	18.8	1131	22.6	1187	26.2	1240	29.9	1339	37.9	**1431**	**46.3**	**1516**	**54.9**
25000	2998	1095	18.4	1152	22.7	1207	27.1	1260	31.2	1310	35.2	1405	43.5	1494	52.5	**1577**	**61.9**
27500	3297	1183	22.6	1235	27.3	1286	32.1	1336	36.8	1383	41.3	1474	50.2	1559	59.5	1639	69.4
30000	3597	1272	27.6	1320	32.5	1367	37.6	1414	42.9	1459	48.1	1545	57.8	1627	67.5		
32500	3897	1363	33.3	1407	38.4	1451	43.9	1495	49.6	1537	55.3	1620	66.2				
35000	4197	1455	39.8	1495	45.3	1536	51.1	1577	57.1	1618	63.2						
37500	4496	1547	47.3	1585	53.1	1623	59.1										

Performance shown is for installation Type D: ducted inlet/ducted outlet. Power rating (BHP) does not include drive losses. Performance data is based on standard air conditions (0.075 #/ft.3). Performance ratings do not include the effects of appurtenances in the airstream. MOST EFFICIENT FAN SELECTION APPEARS IN BOLD PRINT. To complete model code, add arrangement, class of construction, motor enclosure code, motor horsepower code and motor speed code. Refer to page 2 for more information.

Performance Data

Class I | Class II | Class III

A41-_-44_FA100FG_ _ _ _

Wheel Diameter: 44.5 in.
Outlet Area: 11.53 sq. ft.

CFM	Outlet Velocity FPM	Static Pressure 1" RPM	1" BHP	2" RPM	2" BHP	3" RPM	3" BHP	4" RPM	4" BHP	5" RPM	5" BHP	6" RPM	6" BHP	8" RPM	8" BHP	10" RPM	10" BHP
15000	1301	454	3.60	549	6.19	**630**	**8.97**										
18000	1561	496	4.84	594	7.94	667	11.1	**734**	**14.4**	**803**	**18.1**						
21000	1821	550	6.41	639	10.0	712	13.6	773	17.3	**831**	**21.0**	**889**	**25.1**				
24000	2082	607	8.39	679	12.4	759	16.6	818	20.6	872	24.8	**923**	**29.1**	**1024**	**38.3**		
27000	2342	667	10.8	728	15.2	799	19.9	865	24.5	917	29.1	966	33.8	**1057**	**43.4**	**1147**	**53.8**
30000	2602	727	13.8	783	18.5	841	23.6	907	28.8	964	34.0	1011	39.0	1098	49.5	**1179**	**60.2**
33000	2862	788	17.3	840	22.4	890	27.8	947	33.5	1007	39.3	1058	44.9	1142	56.1	1220	67.7
36000	3122	850	21.4	899	26.9	945	32.7	992	38.7	1047	45.0	1101	51.3	1189	63.5		
39000	3382	913	26.3	959	32.1	1002	38.2	1044	44.6	1090	51.3	1141	58.1	1236	71.7		
42000	3643	975	31.8	1020	38.1	1060	44.6	1099	51.3	1138	58.3	1183	65.5				
45000	3903	1039	38.2	1081	44.8	1120	51.7	1156	58.8	1193	66.1	1229	73.7				
48000	4163	1102	45.3	1142	52.4	1180	59.6	1215	67.1								

A41-_-44_FA-66FG_ _ _ _

Wheel Diameter: 44.5 in.
Outlet Area: 10.19 sq. ft.

CFM	Outlet Velocity FPM	Static Pressure 2" RPM	2" BHP	3" RPM	3" BHP	4" RPM	4" BHP	5" RPM	5" BHP	6" RPM	6" BHP	8" RPM	8" BHP	10" RPM	10" BHP	12" RPM	12" BHP
12000	1178	**574**	**4.92**	**657**	**7.27**	**730**	**9.72**	**800**	**12.3**	869	15.1						
15000	1472	630	6.48	**708**	**9.26**	**777**	**12.2**	**840**	**15.2**	**899**	**18.2**	**1010**	**24.7**				
18000	1766	692	8.56	764	11.6	**830**	**14.9**	**890**	**18.3**	**945**	**21.8**	**1048**	**29.1**	**1142**	**36.6**	**1235**	**44.6**
21000	2061	758	11.1	825	14.5	887	18.1	944	21.9	**997**	**25.9**	**1095**	**34.0**	**1185**	**42.5**	**1268**	**51.0**
24000	2355	828	14.1	890	18.1	947	22.0	1002	26.0	1053	30.4	**1147**	**39.4**	**1233**	**48.6**	**1314**	**58.2**
27000	2650	901	17.6	958	22.3	1012	26.7	1063	31.1	1111	35.5	1202	45.3	**1286**	**55.5**	**1363**	**65.8**
30000	2944	976	21.7	1029	26.9	1079	32.1	1127	37.0	1173	41.8	1260	51.9	1340	62.8	**1416**	**74.1**
33000	3238	1054	26.6	1102	32.2	1149	37.9	1194	43.6	1238	48.9	1320	59.6	1398	70.9	1471	82.9
36000	3533	1133	32.3	1177	38.2	1220	44.4	1263	50.7	1305	56.9	1383	68.5	1458	80.2		
39000	3827	1213	38.9	1254	45.2	1294	51.8	1334	58.6	1374	65.4	1449	78.4				
42000	4122	1294	46.6	1332	53.1	1370	60.1	1407	67.3	1444	74.6						
45000	4416	1376	55.2	1412	62.2	1447	69.4	1482	77.1								

A41-_-49_FA100FG_ _ _ _

Wheel Diameter: 49.0 in.
Outlet Area: 13.98 sq. ft.

CFM	Outlet Velocity FPM	Static Pressure 1" RPM	1" BHP	2" RPM	2" BHP	3" RPM	3" BHP	4" RPM	4" BHP	5" RPM	5" BHP	6" RPM	6" BHP	8" RPM	8" BHP	10" RPM	10" BHP
16000	1144	383	3.49	**478**	**6.32**	**562**	**9.69**										
20000	1431	428	4.92	517	8.28	**588**	**11.9**	**656**	**15.9**	724	20.4						
24000	1717	479	6.65	556	10.8	628	14.8	**688**	**19.1**	**745**	**23.7**	**801**	**28.7**	914	39.7		
28000	2003	532	8.85	602	13.7	667	18.4	728	23.1	**780**	**28.0**	**830**	**33.2**	**927**	**44.6**	1023	57.2
32000	2289	585	11.6	653	17.0	710	22.6	767	28.0	820	33.3	**868**	**38.8**	**955**	**50.5**	**1040**	**63.5**
36000	2575	640	14.9	705	20.9	759	27.2	809	33.5	860	39.4	908	45.4	**992**	**57.8**	**1070**	**71.1**
40000	2861	696	19.0	757	25.5	810	32.3	856	39.4	902	46.3	948	53.0	1033	66.2	**1107**	**80.2**
44000	3147	755	23.7	810	30.9	862	38.3	907	45.9	949	53.6	990	61.3	1072	75.9		
48000	3433	814	29.3	864	37.2	914	45.1	959	53.2	999	61.6	1037	70.1	1113	86.4		
52000	3720	873	35.8	920	44.3	967	52.8	1011	61.5	1050	70.4	1087	79.5				
56000	4006	934	43.3	977	52.4	1021	61.6	1063	70.8	1103	80.2						
60000	4292	995	51.8	1034	61.6	1075	71.4	1116	81.2								

A41-_-49_FA-66FG_ _ _ _

Wheel Diameter: 49.0 in.
Outlet Area: 12.36 sq. ft.

CFM	Outlet Velocity FPM	Static Pressure 2" RPM	2" BHP	3" RPM	3" BHP	4" RPM	4" BHP	5" RPM	5" BHP	6" RPM	6" BHP	8" RPM	8" BHP	10" RPM	10" BHP	12" RPM	12" BHP
12000	971	**489**	**4.95**	577	7.63												
16000	1294	541	6.84	**615**	**9.94**	**682**	**13.2**	**748**	**16.8**	811	20.7						
20000	1618	597	9.01	669	12.9	**730**	**16.7**	**786**	**20.7**	**840**	**24.8**	**944**	**33.8**	1045	43.5		
24000	1942	661	11.8	724	16.1	784	20.7	**838**	**25.4**	**887**	**30.0**	**979**	**39.6**	**1068**	**50.0**	1154	61.1
28000	2265	728	15.3	786	20.1	841	25.2	893	30.5	942	36.0	**1028**	**46.7**	**1108**	**57.8**	**1185**	**69.5**
32000	2589	795	19.5	852	25.0	903	30.5	950	36.2	997	42.3	1083	54.7	**1159**	**67.0**	**1230**	**79.5**
36000	2913	865	24.4	920	30.7	968	36.8	1013	43.0	1055	49.4	1137	63.0	1214	77.0	**1282**	**90.8**
40000	3236	938	30.3	988	37.1	1036	44.1	1078	50.9	1118	57.8	1195	72.1	1268	87.4	1337	103
44000	3560	1012	37.3	1058	44.7	1103	52.3	1146	59.9	1184	67.4	1256	82.6	1325	98.6		
48000	3883	1089	45.5	1130	53.3	1172	61.5	1213	69.9	1252	78.2	1321	94.6				
52000	4207	1167	55.0	1204	63.3	1243	72.0	1282	81.0	1319	90.0						
56000	4531	1246	65.9	1280	74.7	1316	83.9	1352	93.4								

Performance shown is for installation Type D: ducted inlet/ducted outlet. Power rating (BHP) does not include drive losses. Performance data is based on standard air conditions (0.075 #/ft.3). Performance ratings do not include the effects of appurtenances in the airstream. MOST EFFICIENT FAN SELECTION APPEARS IN BOLD PRINT. To complete model code, add arrangement, class of construction, motor enclosure code, motor horsepower code and motor speed code. Refer to page 2 for more information.

Performance Data

Class I | Class II | Class III

A41-_-54_FA100FG_ _ _ _

Wheel Diameter: 54.25 in.
Outlet Area: 17.13 sq. ft.

CFM	Outlet Velocity FPM	Static Pressure 1" RPM	1" BHP	2" RPM	2" BHP	3" RPM	3" BHP	4" RPM	4" BHP	5" RPM	5" BHP	6" RPM	6" BHP	8" RPM	8" BHP	10" RPM	10" BHP
20000	1168	349	4.41	**434**	**7.91**	**509**	**12.1**										
25000	1459	391	6.22	470	10.4	**535**	**14.9**	**595**	**19.8**	655	25.3						
30000	1751	439	8.44	507	13.6	571	18.6	**625**	**23.9**	**676**	**29.6**	**726**	**35.8**	826	49.3		
35000	2043	487	11.3	550	17.3	608	23.3	662	29.1	**710**	**35.1**	**754**	**41.6**	**840**	**55.6**	925	71.1
40000	2335	536	14.8	597	21.6	648	28.6	699	35.3	746	41.9	790	48.7	**868**	**63.3**	**943**	**79.2**
45000	2627	587	19.1	645	26.6	693	34.4	738	42.3	783	49.8	826	57.2	**903**	**72.6**	**972**	**89.0**
50000	2919	639	24.3	693	32.5	741	41.0	782	49.8	822	58.5	863	66.9	940	83.4	**1007**	**101**
55000	3211	693	30.5	742	39.5	789	48.6	829	58.1	867	67.8	903	77.5	976	95.7		
60000	3503	748	37.7	793	47.5	837	57.4	877	67.5	913	78.0	947	88.5	1014	109		
65000	3795	803	46.1	844	56.7	886	67.4	925	78.2	961	89.3	993	101				
70000	4086	859	55.8	896	67.2	935	78.7	973	90.2	1009	102						
75000	4378	915	66.9	950	79.0	986	91.3										

A41-_-54_FA-66FG_ _ _ _

Wheel Diameter: 54.25 in.
Outlet Area: 15.15 sq. ft.

CFM	Outlet Velocity FPM	Static Pressure 2" RPM	2" BHP	3" RPM	3" BHP	4" RPM	4" BHP	5" RPM	5" BHP	6" RPM	6" BHP	8" RPM	8" BHP	10" RPM	10" BHP	12" RPM	12" BHP
15000	990	**444**	**6.19**	**522**	**9.50**												
20000	1320	493	8.58	**559**	**12.4**	**619**	**16.5**	**677**	**21.0**	734	25.7						
25000	1650	545	11.3	609	16.1	**664**	**21.0**	**714**	**25.8**	**762**	**31.0**	**855**	**42.0**	945	54.0		
30000	1980	604	15.0	661	20.3	714	26.0	763	31.8	**807**	**37.6**	**889**	**49.5**	**968**	**62.3**	**1045**	**76.0**
35000	2310	666	19.4	718	25.4	767	31.7	813	38.3	857	45.1	**935**	**58.6**	**1007**	**72.3**	**1075**	**86.7**
40000	2640	728	24.7	780	31.7	824	38.5	867	45.6	908	53.1	986	68.6	**1054**	**84.0**	**1118**	**99.5**
45000	2970	793	31.1	842	38.9	885	46.6	925	54.3	963	62.2	1036	79.1	1105	96.6	**1167**	**114**
50000	3300	860	38.7	905	47.2	948	56.0	986	64.5	1022	73.1	1090	90.8	1155	110	1217	129
55000	3630	929	47.7	970	56.9	1010	66.4	1049	76.0	1083	85.4	1147	104	1209	124		
60000	3960	1001	58.4	1037	68.1	1074	78.3	1110	88.7	1145	99.2	1207	120				
65000	4290	1073	70.6	1105	81.0	1139	91.8	1174	103	1207	114						
70000	4620	1146	84.7	1176	95.7	1207	107										

A41-_-60_FA100FG_ _ _ _

Wheel Diameter: 60.0 in.
Outlet Area: 20.9 sq. ft.

CFM	Outlet Velocity FPM	Static Pressure 1" RPM	1" BHP	2" RPM	2" BHP	3" RPM	3" BHP	4" RPM	4" BHP	5" RPM	5" BHP	6" RPM	6" BHP	8" RPM	8" BHP	10" RPM	10" BHP
24000	1148	313	5.24	**390**	**9.48**	**459**	**14.5**										
30000	1435	350	7.38	422	12.4	**481**	**17.8**	**536**	**23.8**	591	30.5						
36000	1722	392	9.98	455	16.2	513	22.2	**562**	**28.6**	**608**	**35.5**	**654**	**43.1**	746	59.6		
42000	2010	434	13.3	492	20.6	545	27.7	595	34.6	**637**	**42.0**	**678**	**49.8**	**757**	**66.9**	836	85.7
48000	2297	478	17.4	533	25.5	580	34.0	626	41.9	670	49.9	**709**	**58.2**	**780**	**75.8**	**850**	**95.2**
54000	2584	523	22.4	576	31.4	620	40.8	661	50.2	702	59.2	741	68.1	**811**	**86.7**	**874**	**107**
60000	2871	569	28.5	618	38.3	661	48.5	700	59.1	737	69.5	774	79.5	844	99.3	**904**	**120**
66000	3158	616	35.6	662	46.4	704	57.4	741	68.9	775	80.5	809	91.9	876	114		
72000	3445	665	44.0	706	55.8	747	67.6	783	79.9	816	92.4	847	105	909	130		
78000	3732	714	53.8	752	66.5	790	79.3	826	92.2	858	106	888	119				
84000	4019	763	65.0	798	78.6	834	92.4	869	106	901	120						
90000	4306	813	77.8	845	92.4	879	107	912	122								

A41-_-60_FA-66FG_ _ _ _

Wheel Diameter: 60.0 in.
Outlet Area: 18.53 sq. ft.

CFM	Outlet Velocity FPM	Static Pressure 2" RPM	2" BHP	3" RPM	3" BHP	4" RPM	4" BHP	5" RPM	5" BHP	6" RPM	6" BHP	8" RPM	8" BHP	10" RPM	10" BHP	12" RPM	12" BHP
24000	1295	442	10.3	**502**	**14.9**	**557**	**19.9**	**611**	**25.3**	662	31.0						
30000	1619	488	13.5	546	19.3	**596**	**25.1**	**642**	**31.0**	**686**	**37.2**	**771**	**50.6**	853	65.2		
36000	1943	540	17.7	592	24.2	641	31.1	**684**	**38.1**	**725**	**45.0**	**800**	**59.4**	**872**	**75.0**	942	91.6
42000	2267	595	23.0	642	30.2	687	37.7	729	45.8	769	54.0	**840**	**70.1**	**905**	**86.7**	**968**	**104**
48000	2590	650	29.2	696	37.5	737	45.7	776	54.3	814	63.4	884	82.1	**946**	**100**	**1004**	**119**
54000	2914	707	36.6	752	46.0	791	55.2	827	64.5	862	74.1	929	94.5	991	116	**1047**	**136**
60000	3238	766	45.5	807	55.7	846	66.2	881	76.4	914	86.7	976	108	1036	131	1092	154
66000	3562	827	55.9	864	67.0	901	78.4	936	89.9	967	101	1026	124	1082	148		
72000	3886	890	68.2	923	80.0	958	92.3	991	105	1023	117	1079	142				
78000	4209	954	82.5	984	95.0	1015	108	1047	122	1078	135						
84000	4533	1018	98.8	1046	112	1075	126	1104	140								
90000	4857	1083	117	1109	132												

Performance shown is for installation Type D: ducted inlet/ducted outlet. Power rating (BHP) does not include drive losses. Performance data is based on standard air conditions (0.075 #/ft.3). Performance ratings do not include the effects of appurtenances in the airstream. MOST EFFICIENT FAN SELECTION APPEARS IN BOLD PRINT. To complete model code, add arrangement, class of construction, motor enclosure code, motor horsepower code and motor speed code. Refer to page 2 for more information.

Performance Data

Class I | Class II | Class III

A41-4-_ _ _FA100FG_ _ _ _

Size	Class	Motor HP	Motor Code	Motor (Fan) HP	Motor (Fan) Code	Peak Fan BHP	Cubic Feet Per Minute vs.Static Pressure 0"	½"	1"	1½"	2"	2½"	3"	4"	5"	6"	7"	8"	9"	10"	Outlet Area	Wheel Dia. Inches
12	1	⅓	E	1750	3	0.30	1509	1291	1068	785											0.87	12¼
	2	3	K	3450	2	2.31	2976	2879	2775	2659	2529	2400	2294	2079	1820	1477						
15	1	1	H	1750	3	0.89	2872	2693	2382	2124	1861	1503									1.30	15⅜
	2	7½	M	3450	2	6.79	5663	5581	5494	5400	5298	5185	5034	4653	4380	4147	3896	3598	3254	2836		
18	1	¾	G	1160	4	0.65	3463	3082	2524	1980											1.88	18½
	1	3	K	1750	3	2.24	5225	5007	4745	4344	3979	3668	3317									
22	1	2	J	1160	4	1.85	6636	6181	5709	5085	4253	3373									2.81	22⅝
	1	7½	M	1750	3	6.34	10010	9714	9410	9097	8788	8464	8104	6934	5982							
24	1	3	K	1160	4	2.82	8555	8063	7552	7003	6077	5280	4182								3.33	24⅝
	2	10	N	1750	3	9.68	12907	12585	12256	11919	11578	11241	10885	9948	8671	7624						
27	1	2	J	870	5	2.19	9191	8452	7657	6303	5081										4.22	27⅝
	1	5	L	1160	4	5.18	12255	11711	11141	10564	9870	8690	7850									
	2	20	P	1750	3	17.8	18489	18132	17769	17398	17019	16642	16263	15444	14227	12756	11650	10362				
30	1	3	K	870	5	3.30	11772	10974	10139	8904	7516	5924									4.98	30
	1	7½	M	1160	4	7.82	15696	15106	14494	13875	13215	12312	11032	9137								
	2	30	R	1750	3	26.9	23679	23291	22899	22500	22093	21679	21272	20434	19500	18036	16429	15230	13937	12219		
33	1	5	L	870	5	5.32	15668	14796	13889	12892	11129	9789	8039								6.02	33
	1	15	O	1160	4	12.6	20891	20245	19578	18894	18210	17463	16455	13938	11752							

A41-4-_ _ _FA-66FG_ _ _ _

Size	Class	Motor HP	Motor Code	Motor (Fan) HP	Motor (Fan) Code	Peak Fan BHP	Cubic Feet Per Minute vs.Static Pressure 0"	½"	1"	1½"	2"	2½"	3"	4"	5"	6"	7"	8"	10"	12"	Outlet Area	Wheel Dia. Inches
12	1	⅓	E	1750	3	0.25	1104	950	777	569											0.73	12¼
	2	2	J	3450	2	1.94	2176	2101	2024	1945	1864	1781	1694	1512	1325	1065						
15	1	¾	G	1750	3	0.67	2389	2188	1965	1724	1452	1106									1.15	15⅜
	2	5	L	3450	2	5.14	4711	4611	4510	4407	4301	4192	4080	3848	3607	3355	3086	2793	2050			
18	1	¾	G	1160	4	0.48	2651	2312	1899	1390											1.66	18½
	1	2	J	1750	3	1.63	4000	3786	3555	3301	3027	2726	2391	1501								
	3	15	O	3450	2	12.5	7885	7780	7673	7563	7452	7338	7222	6981	6727	6462	6187	5901	5281	4596		
22	1	1½	I	1160	4	1.29	4970	4626	4158	3620	3019	2263									2.48	22⅝
	1	5	L	1750	3	4.44	7498	7283	7048	6785	6467	6107	5755	5017	4128							
24	1	2	J	1160	4	1.97	6408	6040	5572	4989	4393	3693	2843								2.94	24⅝
	2	7½	M	1750	3	6.78	9667	9435	9185	8913	8601	8239	7842	7075	6237	5238	4037					
27	1	1½	I	870	5	1.54	6990	6312	5567	4611	3605										3.73	27⅝
	1	5	L	1160	4	3.65	9320	8816	8303	7773	7097	6367	5700									
	2	15	O	1750	3	12.5	14060	13728	13393	13054	12712	12374	12027	11241	10250	9336	8436	7368				
30	1	3	K	870	5	2.32	8952	8218	7459	6431	5455	4135									4.39	30
	1	5	L	1160	4	5.51	11936	11390	10832	10273	9651	8854	8081	6535								
	2	20	P	1750	3	18.9	18007	17647	17284	16917	16547	16178	15810	15040	14107	13012	12029	11066	8547			
33	1	5	L	870	5	3.74	11915	11110	10290	9323	8154	7077	5616								5.32	33
	1	10	N	1160	4	8.87	15887	15287	14677	14065	13436	12715	11831	10173	8360							
	3	30	R	1750	4	30.5	23967	23571	23173	22771	22366	21958	21553	20737	19876	18834	17637	16497	14368	11577		

Performance shown is for installation Type D: ducted inlet/ducted outlet. Performance data is based on standard air conditions (0.075 #/ft.3) and constant speed. Performance ratings do not include the effects of appurtenances in the airstream. To complete model code, add size, class of construction, motor enclosure code, motor horsepower code and motor speed code. Refer to page 2 for more information.

Options and Accessories

Drain

Fiberglass bulk head fitting assembled in housing, NPT female threaded fitting. 1" NPT on Series 41 and Series 41P.

Access Door

Raised, bolted type door - held in place with zinc plated bolts and gasketed for a tight seal.

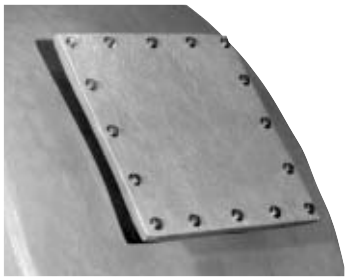

Inspection Door

Allows periodic visual inspection of wheel - fastened with stainless steel bolts and gasketed for tight seal.

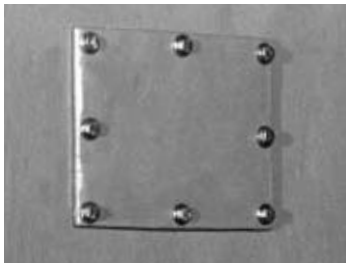

Flanged Inlet

Fiberglass inlet flange is available. Flanges are drilled upon request. Flanged and drilled inlet is required when inlet control damper is furnished.

Disconnect Switch

On-off switch mounted to the unit to provide safety during maintenance.

V-Belt Drives

Constant speed (fixed pitch) or adjustable speed (variable pitch) oil, heat, and static resistant type V-Belt Drives, oversized for long life and continuous duty as standard, are available upon request.

Inlet Boxes

Solid fiberglass construction. Inlet box improves entry conditions and minimizes losses which are generally associated with duct elbows at the fan inlet. Inlet boxes are designed for specific applications. Contact factory.

Arrangement 1 Sub-Base

Common structural support for Arrangement 1 fan and motor. Specify motor mounting position (see page 6). Epoxy coated steel. Series 41 only.

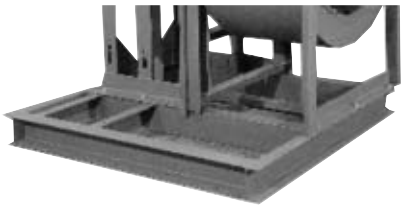

Arrangements

Arrangement 8 and other arrangements not shown are available, (see page 6). Contact factory.

Vibration Isolators

Rubber-in-shear or spring type isolators available on all models.

Drive Guards

Encloses the drive assembly while permitting circulation of ambient air. Standard features include: tach opening, belt tension openings and adjustable length. Series 41 only.

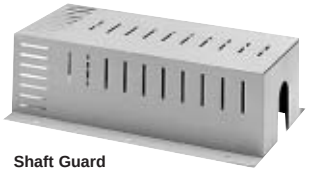

Shaft Guard
Arrangement 9 or 1

Belt Drive Guard
Arrangement 9

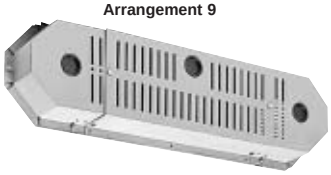

Inlet and Outlet Guards

Spiral ring guard offers protection on inlet side and a wire mesh guard can be furnished for the outlet side. Guards are epoxy coated steel.

Combination Drive Guard and Weather Cover

Covers motor and shaft sheaves as well as belts. Combines guarding the drive as well as protection from the weather. Epoxy coated steel. Specify fan arrangement.

Arrangement 9
Series 41

Arrangement 10
Series 41P

Arrangement 9M Motor Base

Accommodates a larger frame size motor than the standard arrangement 9 base. Series 41 only.

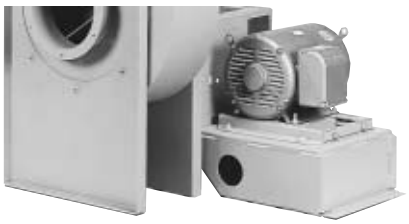

General Construction Options

Abrasive/Erosive Resistant Coating

HartKoate is an abrasive/erosive resistant coating developed by Hartzell Fan for application in environments where abrasive/erosive conditions may exist. HartKoate helps prevent premature deterioration of equipment in environments where uncoated fans may fail.

Impact resistant HartKoate is applied to a 50-60 mil thickness suitable for temperatures to 250°F.

HartKoate is particularly appropriate for use when water mist and/or abrasive particles exist in the airstream.

Contact your Hartzell representative for further details concerning the application of HartKoate coating to fiberglass fans in corrosive atmospheres.

Hi-Cor Construction

All airstream surfaces exposed to a corrosive environment will be protected with a layer of Synthetic (Nexus) surfacing veil. An additional final coat of resin will be applied for extra corrosion resistance.

When Hi-Cor construction is required, the factory should be consulted concerning the corrosive environment involved.

Electrostatically Grounded Fiberglass Fans

For applications in which fiberglass fans are handling gas fumes that are not only corrosive but also potentially explosive, the equipment should be specially constructed to control and remove static electricity. Interior airstream surfaces can be coated with a "carbon rich" resin coat and grounding straps secured from the side of the housing to the fan's steel base. All that remains to effectively ground the airstream is to ground the fan base at the time of installation.

SAFETY ACCESSORIES, APPLICATION AND USE WARNING

The safe application and use of equipment supplied by Hartzell Fan, Inc. is the responsibility of the installer, the user, the owner, and the employer. Since the application and use of its equipment can vary greatly, Hartzell Fan, Inc. offers various product types, optional safety accessories, and sound performance data per laboratory tests. Hartzell Fan, Inc. sells its equipment with and without safety accessories, and accordingly, it can supply such safety accessories only upon receipt of an order. The need for safety accessories will frequently depend upon the type of system, fan location and operating procedures being employed. The proper protective safety accessories to meet company standards, local codes, and the requirements of the Occupational Safety and Health Act must be determined by the user since safety requirements vary depending on the location and use of the equipment. If applicable local conditions, standards, codes or OSHA rules require the addition of the safety accessories, the user should specify and obtain the required safety accessories from Hartzell Fan, Inc. and should not allow the operation of the equipment without them.

Owners, employers, users and installers should read "RECOMMENDED SAFETY PRACTICES FOR USERS AND INSTALLERS OF INDUSTRIAL AND COMMERCIAL FANS" published by the Air Movement and Control Association International, Inc., 30 West University Drive, Arlington Heights, Illinois 60004. A copy of this publication is enclosed with each fan shipped from Hartzell Fan, Inc., and is available upon request at Hartzell's office in Piqua, Ohio 45356.

Please contact Hartzell Fan, Inc. or your local Hartzell representative for more information on product types, safety accessories, and sound performance estimates.

Remember, the selection of safety accessories and the safe application and use of equipment supplied by Hartzell Fan, Inc. is **your** responsibility.

Heavy-Duty Control Dampers

Inlet Control Damper

Dampers are mounted on the blower's drilled inlet flange to both increase the efficiency of the system and permit control of air volume. Dampers are epoxy coated or stainless steel construction.

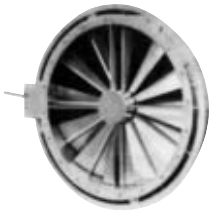

Outlet Dampers

Dampers are mounted directly on the blower outlet to control the volume of air delivered to the system. Opposed and parallel blade dampers are available in steel, stainless steel, coated steel and solid fiberglass.

Parallel Blade Type

Best suited for applications requiring accurate air volume in a range from wide open to 75% of wide open. Usually used for balancing the system or for modulated control when pressure drop is variable.

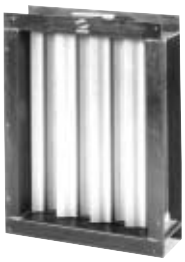

Opposed Blade Type

Best suited for control over a broad range of air volume with more precise control.

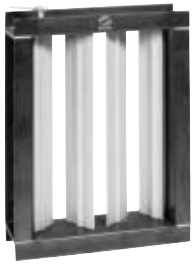

Both types of outlet control dampers are available in three classifications:

Class I – Maximum static pressure: 5" SP
Maximum velocity: 3900 FPM

Class II – Maximum static pressure: 8½" SP
Maximum velocity: 5100 FPM

Class III – Maximum static pressure: 20" SP
Maximum velocity: 6000 FPM

CONTACT YOUR LOCAL HARTZELL REPRESENTATIVE FOR ASSISTANCE.

1-800-336-3267

Hartzell Warranty

LIMITED WARRANTIES

Hartzell represents to Buyer that any goods to be delivered hereunder will be produced in compliance with the requirements of the Fair Labor Standards Act of 1938 as amended.

Hartzell also warrants to Buyer its goods to be free from defects in workmanship and material under normal use and service for one (1) year after tender of delivery by Hartzell, plus six months allowance for shipment to approved stocking dealers and distributors. No warranty extends to future performance of goods and any claims for breach of warranty or otherwise accrues upon tender of delivery.

The foregoing constitute Hartzell's sole and exclusive warranties and are in lieu of all other warranties, whether written, oral, express, implied or statutory.

LIMITATION OF LIABILITY FOR BREACH OF WARRANTY

Hartzell's obligation for any breach of warranty is limited to repairing or replacing, at its option, without cost to Buyer at its factory any goods which shall, within such a warranty period, be returned to it with transportation charges prepaid, and which its examination shall disclose to its satisfaction to have been defective. Any request for repair or replacement should be directed to Hartzell Fan, Inc., P.O. Box 919, Piqua, Ohio 45356. Hartzell will not pay for any repairs made outside its factory without its prior written consent. This does not apply to any such Hartzell goods which have failed as a result of faulty installation or abuse, or incorrect electrical connections or alterations, made by others, or use under abnormal operating conditions or misapplication of the goods.

LIMITATION OF LIABILITY

To the extent the above limitation of liability for breach of warranty is not applicable, the liability of Hartzell on any claim of any kind, including negligence, for any loss or damage arising out of or connected with, or resulting from the sale and purchase of the goods or services covered by these Terms and Conditions of Sale or from the performance or breach of any contract pertaining to such sale or purchase or from the design manufacture, sale, delivery, resale, installation, technical direction installation, inspection repair, operation or use of any goods or services covered by these Terms and Conditions shall, in no case exceed the price allocable to the goods or services which gave rise to the claim and shall terminate one year after tender of delivery of said goods or services, plus six months allowance for shipment to approved stocking dealers and distributors.

In no event whether as a result of breach of contract, or warranty or alleged negligence, defects, incorrect advice or other causes, shall Hartzell be liable for special or consequential damages, including, but not limited to, loss of profits or revenue, loss of use of the equipment or any associated equipment, cost of substitute equipment, facilities or services, down time costs, or claims of customers of the Buyer for such damages. Hartzell neither assumes nor authorizes any person to assume for it any other liability in connection with the sale of its goods or services.

NO IMPLIED WARRANTIES OF MERCHANTABILITY OR FITNESS

HARTZELL DOES NOT WARRANT THAT SAID GOODS ARE OF MERCHANTABLE QUALITY OR THAT THEY ARE FIT FOR ANY PARTICULAR PURPOSE. THERE IS NO IMPLIED WARRANTY OF MERCHANTABILITY AND THERE IS NO IMPLIED WARRANTY OF FITNESS.

Propeller Fans

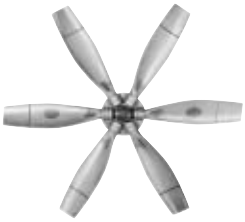

Cooling Tower & Heat Exchanger Fans

Duct Fans

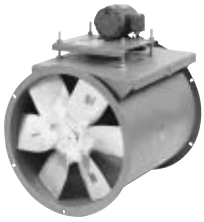

Duct Axial Fans

Vaneaxial Blowers

Cool Blast & Utility Fans

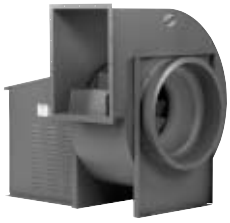

Steel Centrifugal Blowers

Roof Ventilators – Steel & Fiberglass

Heating Equipment – Gas & Steam

Fiberglass Axial Flow Fans

Fiberglass Centrifugal Blowers

Marine – Mine Duty Blowers

Hartzell Fan, Inc., Piqua, Ohio 45356 • Plants in Piqua, Ohio and Portland, Indiana

Litho in U.S.A. A-160-C 4/05 2.5M

Hartzell Fan, Inc.®

ESP - Version 1.16.142 - June, 2006

Print Date: 7/25/2006

A41P0-182FA-66FGFCLL

Discharge Sound Pressure = 83 dBA @ 5.0 ft

Radiated Sound Pressure = 73 dBA @ 5.0 ft

Discharge Sound Power = 94 LwA

Radiated Sound Power = 84 LwA

VFR: 2700. cfm

SP: 7. in wg

Fan RPM: 2436

The A-weighted sound pressure level (dBA) is based on Hartzell Laboratory sound power tests, and is calculated in accordance with AMCA standard 301.

The dBA, LwA and radiated values are not AMCA International Licensed
The calculation assumes a free field condition with a directivity factor for hemi-spherical radiation (Q = 2).

The installed sound pressure levels are influenced by the installation and acoustic environment, and cannot be guaranteed. Use of this estimated level alone for field acceptability tests is not recommended.

Although the calculation can be done for any stated distance, the free field does not start until 20 to 50 feet from the equipment in most installations.

Contact Hartzell Fan for more information concerning dBA values.

Hartzell Fan, Inc.®

ESP - Version 1.16.142 - June, 2006

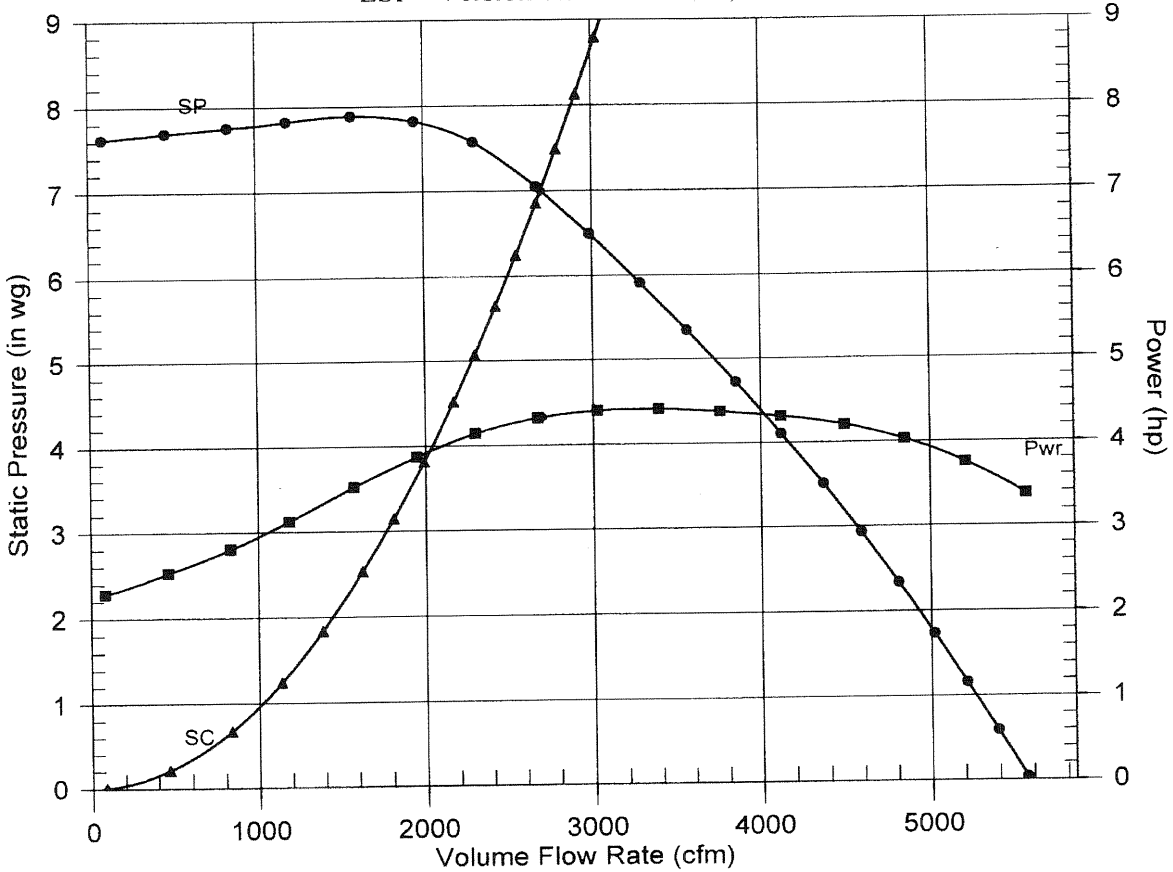

Date:	7/25/2006
Job Ref:	
Tag #:	
Proposal #:	
Rep. Name:	Hartzell Fan, Inc.
Phone #:	1-800-336-3267
Fax #:	1-937-773-8994

Fan Selected:

A41P0-182FA-66FGFCLL

41P - Fiberglass Backward Curved Centrifugal Fan, Packaged

Vol Flow Rate	2700.
Static Pressure	7.
Density	.075
Operating Temp	70 F
Fan RPM	2436
Max Safe RPM	3613
Operating Power	4.324
Standard Power	4.324
Static Efficiency	0.688
Outlet Velocity	1627

Power [BHP] excludes drives

Discharge Sound Power Levels referred to 10^-12 watts

1	2	3	4	5	6	7	8
102	102	93	92	88	84	80	80

Radiated Sound Power Levels referred to 10^-12 watts

1	2	3	4	5	6	7	8
98	95	83	81	76	71	67	67

Radiated Sound is not AMCA licensed.

Hartzell Fan, Inc. certifies that the model shown is licensed to bear the AMCA Seal.
The ratings shown are based on tests and procedures performed in accordance with AMCA Publication 211 and AMCA Publication 311 and comply with the requirements of the AMCA Certified Ratings Program.

Performance shown is for Installation Type D: Ducted Inlet, Ducted Outlet.
Power [BHP] excludes drives.
Performance Ratings do not include the effects of appurtenances in the airstream.
Sound ratings are based on sound power level data obtained in accordance with AMCA Standard 300.
The sound power level ratings shown are in decibels, referred to 10^-12 watts, calculated per AMCA Standard 301.
Fan Outlet Sound Testing. Values shown are for outlet Lwo sound power levels for: Installation Type D: ducted inlet, ducted outlet.
Ratings include the effects of duct end correction.

See page 2 for sound information, including dBA and LwA.

104
Aug.02, 2006

BALDOR

Product Quick Search
M3615T-5
Go

General Information
Overview
Specifications
Performance Data
Parts List
Dimensional Dwg
Connection Diag
Product Literature
More Information
Locate Distributor
Baldor Sales Offices
| Return to List

AC Motors | General Purpose |

Performance Data: M3615T-5

Create PDF (Note: Please disable any browser popup blockers.)

Rated Output	5 HP	Hertz	60	NEMA Nom. Eff.	87.5
Volts	575	Phase	3	Power Factor	75
Full Load Amps	5.7	NEMA Design Code	B	Service Factor	1.15
Speed	1750	LR KVA Code	K	Rating - Duty	40C AMI

(Typical performance - Not guaranteed values)

Full Load Torque	14.9 LB-FT	Starting Current	43.5 Am
Start Configuration	DOL	No-Load Current	3.16 Am
Break Down Torque	57.2 LB-FT	Line-line Resistance @ 25° C	3.84 Oh
Pull-Up Torque	33.4 LB-FT	Temperature Rise, C @ FL (in deg)	90
Locked-Roter Torque	40.1 LB-FT	Temp. Rise @ S.F. Load (in deg)	107

% of Rated Load	25	50	75	100	125	150
Power Factor	34	56	69	76	81	83
Efficiency	80.3	86.9	88.2	87.9	87.2	85.6
Speed (rpm)	1788	1776	1764	1751	1737	1719
Line Amperes	3.34	3.88	4.65	5.54	6.64	7.83

* For certified information, contact your local Baldor office.

General Information
Overview
Specifications
Performance Data
Parts List
Dimensional Dwg
Connection Diag
Product Literature
More Information
Locate Distributor
Baldor Sales Offices
| Return to List

AC Motors | General Purpose |

Specifications: M3615T-5

Catalog Number:	M3615T-5
Specification Number:	36G784T865H1
Horsepower:	5
Voltage:	575
Hertz:	60
Phase:	3
Full Load Amps:	5.7
Usable at 208 Volts:	N/A
RPM:	1750
Frame Size:	184T
Service Factor:	1.15
Rating:	40C AMB-CONT
Locked Rotor Code:	K
NEMA Design Code:	B
Insulation Class:	F
Full Load Efficiency:	87.5
Power Factor:	75
Enclosure:	TEFC
Baldor Type:	3633M
DE Bearing:	6206
ODE Bearing:	6205
Electrical Specification Number:	36WGT865
Mechanical Specification Number:	36G784
Base:	RG
Mounting:	F1

* For certified information, contact your local Baldor office.

36LYG784

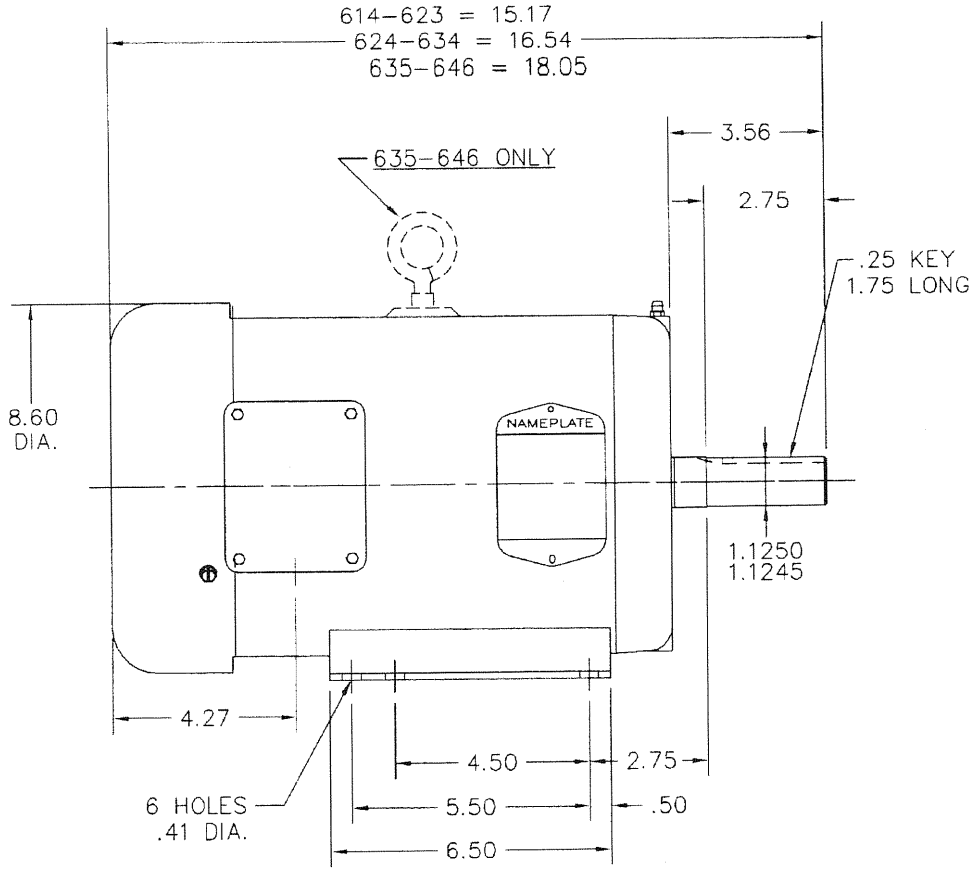

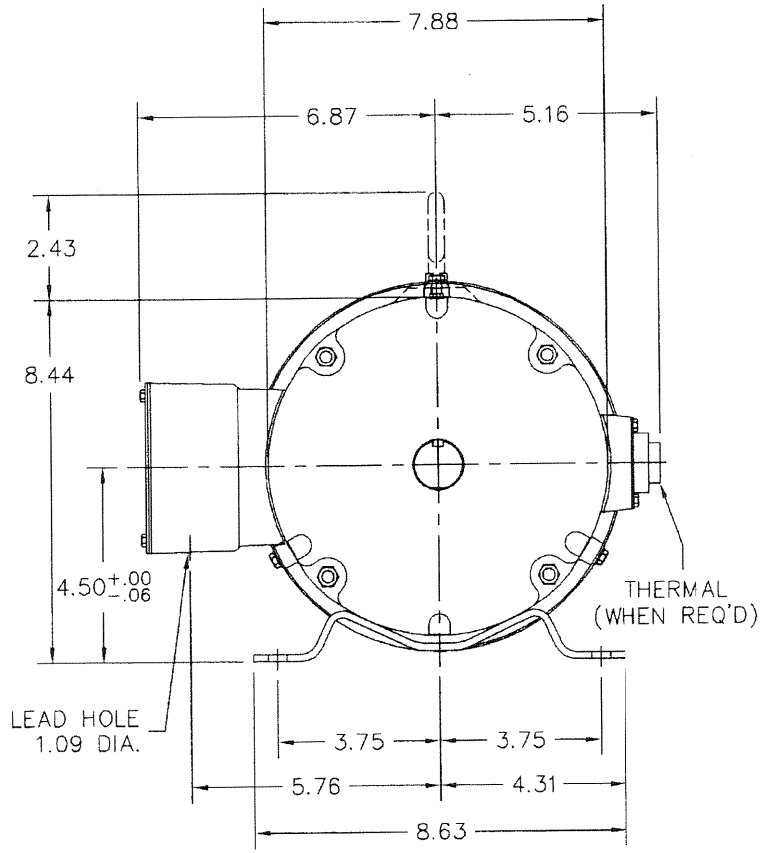

CUSTOMER IS RESPONSIBLE FOR DETERMINING THAT MOTOR PERFORMANCE IS SUITABLE IN THE APPLICATION.

REV. DESC: FREEZE LINES SHOWING THROUGH CAPACITOR/KO BOX			BALDOR ELECTRIC Co.
REV. LTR: E	VERSION: 02	TDR: 000000384004	
36LYG784	FILE: \AAA\00001\236	REVISED: 17:07:52 12/22/2005	HORZ 182-4T TEFC 36M
	MTL: –	BY: ENCHRCO	

36LYG784

CD0006

TYPICAL WYE-CONNECTED MOTOR

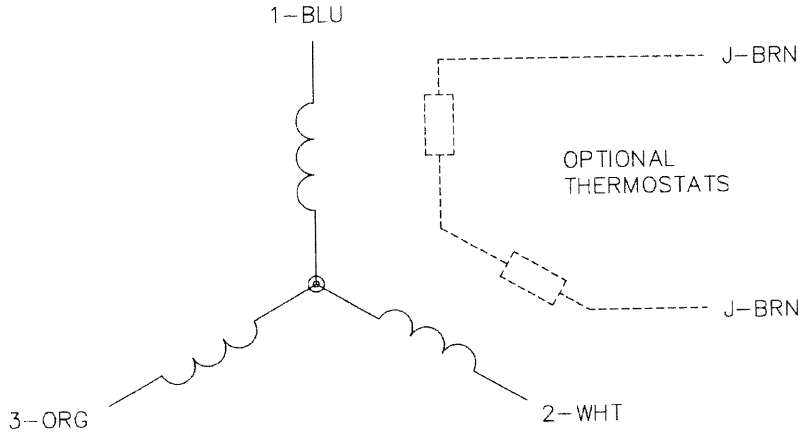

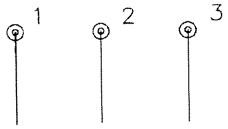

LINE

TYPICAL DELTA-CONNECTED MOTOR

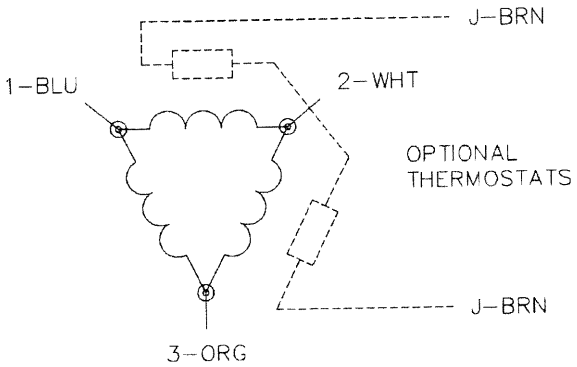

NOTES:

1. THREE LEAD MOTOR MAY BE EITHER WYE CONNECTED OR DELTA CONNECTED.
2. INTERCHANGE ANY TWO LINE LEADS TO REVERSE ROTATION.
3. OPTIONAL THERMOSTATS ARE PROVIDED WHEN SPECIFIED.
4. ACTUAL NUMBER OF INTERNAL PARALLEL CIRCUITS MAY VARY.
5. LEAD COLORS ARE OPTIONAL. LEADS MUST BE NUMBERED AS SHOWN.

CD0006

REV. DESC: REVISE TO SHOW OPTIONAL COLORS			
REV. LTR: D	BY: JLP	REVISED: 01/21/99 4:02	TDR: 0171435
CD0006		FILE: AAA00005141	MDL: –
		MTL: –	

BALDOR ELECTRIC Co.

3PH, SV, 3 LEADS, WYE OR DELTA CONNECTED

CD0006

SWARTWOUT

3900 Dr. Greaves Rd. • Kansas City, MO 64030 • (816) 761-7476 • FAX (816) 765-8955

426AF FIBERGLASS BACKDRAFT DAMPER

Airfoil Blade

STANDARD CONSTRUCTION

FRAME
Fiberglass Channel, Vinyl Ester Resin. See table for dimensions.

BLADES
Airfoil Shape, Vinyl Ester Resin, 7 1/2" (191) wide.

AXLES
3/4" (19) diameter fiberglass rod. Vinyl Ester Resin.

BEARINGS
Molded PTFE.

LINKAGE
316SS out of airstream.

COUNTERBALANCE ASSEMBLY
316SS out of airstream.

MAXIMUM TEMPERATURE
200°F (94°C).

MINIMUM SIZE
6"w x 8"h (152 x 203).

MAXIMUM SIZE
48"w x 72"h (1219 x 1829).
Consult Swartwout for dampers larger than maximum size shown.

Dimensions in parenthesis ( ) indicate millimeters.

Vinyl Ester Resin is Series 625.

All options at additional cost.

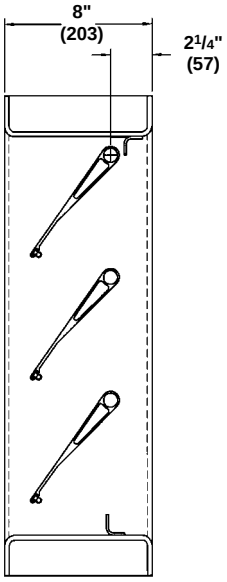

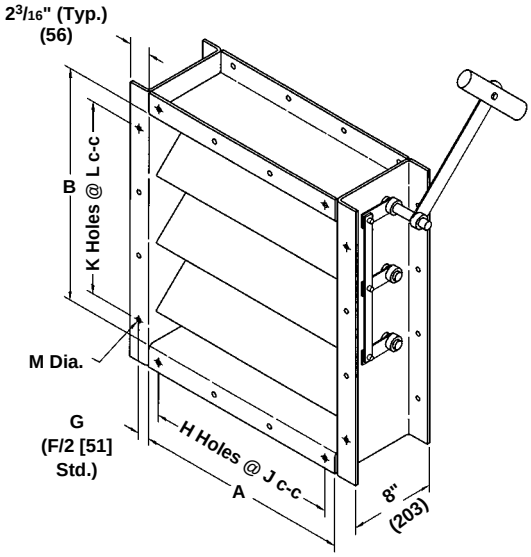

Illustrated with Optional Bolt Holes

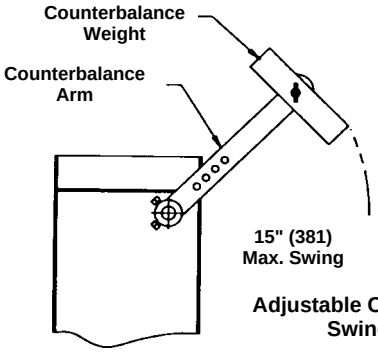

Adjustable Counterbalance Swing Detail

FRAME		BLADES		SEALS (Optional)		AXLES		BEARINGS		LINKAGE		ACCESSORIES (Optional)	
8" x 2 3/16" x 1/4" (203 x 56 x 6) Fiberglass Channel		7 1/2" (191) wide, Airfoil shape		Silicone Blade Seal		3/4" (19) diameter fiberglass rod		Molded PTFE		316SS side linkage		Bolt Holes - 1 Flange	
				Viton Blade Seal								Bolt Holes - 2 Flanges	
				EPDM Blade Seal		3/4" (19) diameter 316 SS							
				SS Jamb Seal									
				Polycarbonate Jamb Seal									
				Axle Shaft Seal									

QTY.	DIMENSIONS										TEMP. °F	COMMENTS	TAG
	A	B	C	F	G	H	J	K	L	M			

PROJECT:
ARCH/ENGR:
REPRESENTATIVE:

LOCATION:
CONTRACTOR:
DATE:

ALL STATED SPECIFICATIONS ARE SUBJECT TO CHANGE WITHOUT NOTICE OR OBLIGATION. © Swartwout 2000

426AF PERFORMANCE DATA

Damper Width	Maximum System Back Pressure	Maximum System Velocity	Leakage with Seals*		Leakage without Seals*	
			% of max. flow	CFM/ sq. ft.	% of max. flow	CFM/ sq. ft.
48" (1219)	5.5" w.g.	4000 fpm	0.18	7	1.00	40
36" (914)	9.0" w.g.	4000 fpm	0.18	7	1.25	50
24" (610)	14.0" w.g.	4000 fpm	0.25	10	1.50	60
12" (305)	16.0" w.g.	4000 fpm	0.30	12	2.50	100

*Leakage information based on pressure differential of 1" w.g. tested per AMCA Std. 500.

Damper may tolerate higher pressures and velocities than those listed here. Conservative ratings are presented intentionally in an effort to avoid misapplication. Consult Swartwout or your Swartwout representative when a damper is to be applied in conditions exceeding recommended maximums.

LEAKAGE CORRECTION FACTOR

Static Pressure (in. w.g.)	1	2	3	4	5	6	7	8	9	10	11	12	13	14	15	16
Correction Factor	1.0	1.4	1.7	2.0	2.2	2.4	2.6	2.8	3.0	3.2	3.3	3.5	3.6	3.7	3.9	4.0

DETERMINING LEAKAGE:

To determine leakage at static pressure differentials higher than one inch water gage, multiply leakage at one inch (determined from appropriate table above) by correction factor for higher static pressure (determined from the Leakage Correction Factor Table).

Example:
Find leakage for a 36" (914) wide damper equipped with optional blade and jamb seals at 3 inches water gage: 7 CFM/sq. ft. x 1.7 = 11.9 CFM/sq. ft. leakage at 3 inches water gage.

426AF SUGGESTED SPECIFICATION

Furnish and install, at locations shown on plans or in accordance with schedules, fiberglass airfoil blade design backdraft dampers. Dampers shall be of the pultruded construction and comply with ASTM D4385-84 and ASTM E-84. Material used in construction shall be a flame retardant vinyl ester based resin. All materials in the airstream must meet or exceed required contamination concentrations. Bearing design shall be based on system pressure and shall be of a Teflon based material with graphite impregnation. All exposed glass shall be coated with resin compatible to that used in the pultrusion process. No exposed or non-coated edges are acceptable. Damper blade skins shall be a minimum of 5/32" (4) thick hollow airfoil shape and be complete with a full length pultruded axle pocket. Axle pockets shall be reinforced to meet or exceed the required loading. Blade shape shall also include a pultruded slot for insertion of optional blade seals. All inside surfaces shall utilize the same surfacing veils incorporated on the service side of the blade. Single skin, open contact, or hand lay-up blades are not acceptable. Damper frame shall be 8" deep x 2 3/16" (203 x 56) flanged style minimum 1/4" (6) thick. Fiberglass axles shall be minimum 3/4" (19) diameter pultruded construction of a vinyl ester based resin combined with continuous strand roving and complete with surfacing veil. Damper linkage shall be located out of airstream and constructed of 316SS. Face linkage in airstream is not acceptable. Standard damper construction shall withstand 14" WG and 4000 FPM based on a 24" (610) blade length. Submittal information shall include published performance data based on AMCA Standard 500 testing illustrating maximum pressure data, flow ratings, and leakage characteristics for a full range of damper sizes. Data illustrating one size damper only is not acceptable. Manufacturer shall submit a sample damper for construction review and approval. Damper shall be Swartwout model 426AF.

AIRFOIL FIBER-AIRE COUNTERBALANCED BACKDRAFT DAMPER 426AF

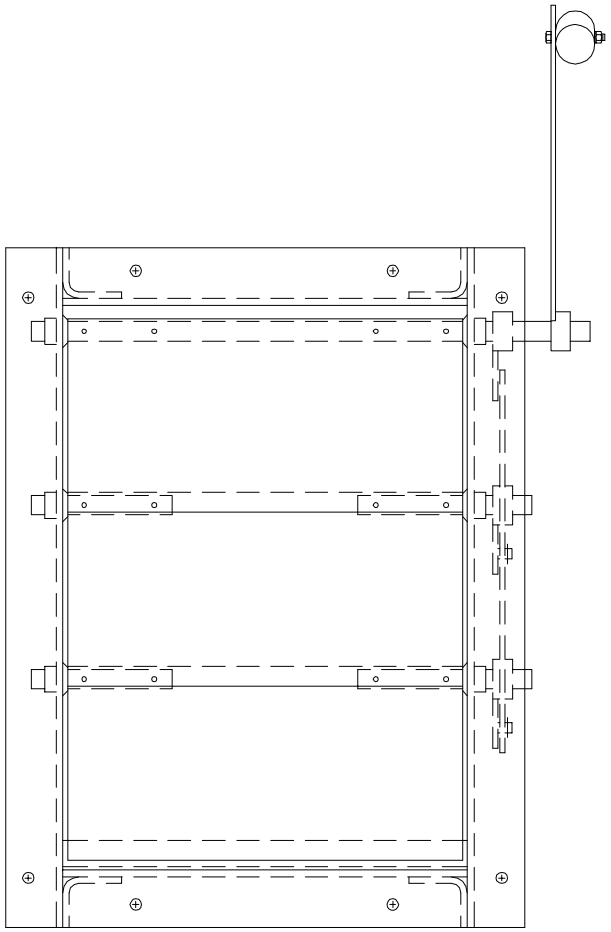

FACE VIEW

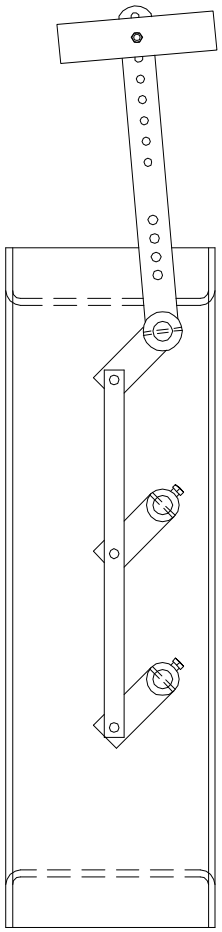

SIDE VIEW

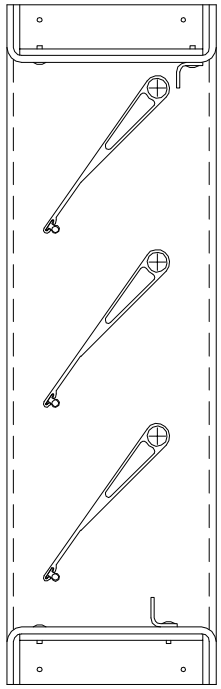

SECTION VIEW
(SHOWN PARTIALLY OPEN)

REV	DATE	DESCRIPTION	DRAWN BY	CHECKED BY	APPROVED BY
0	7/31/06	ISSUE FOR APPROVAL	JB		

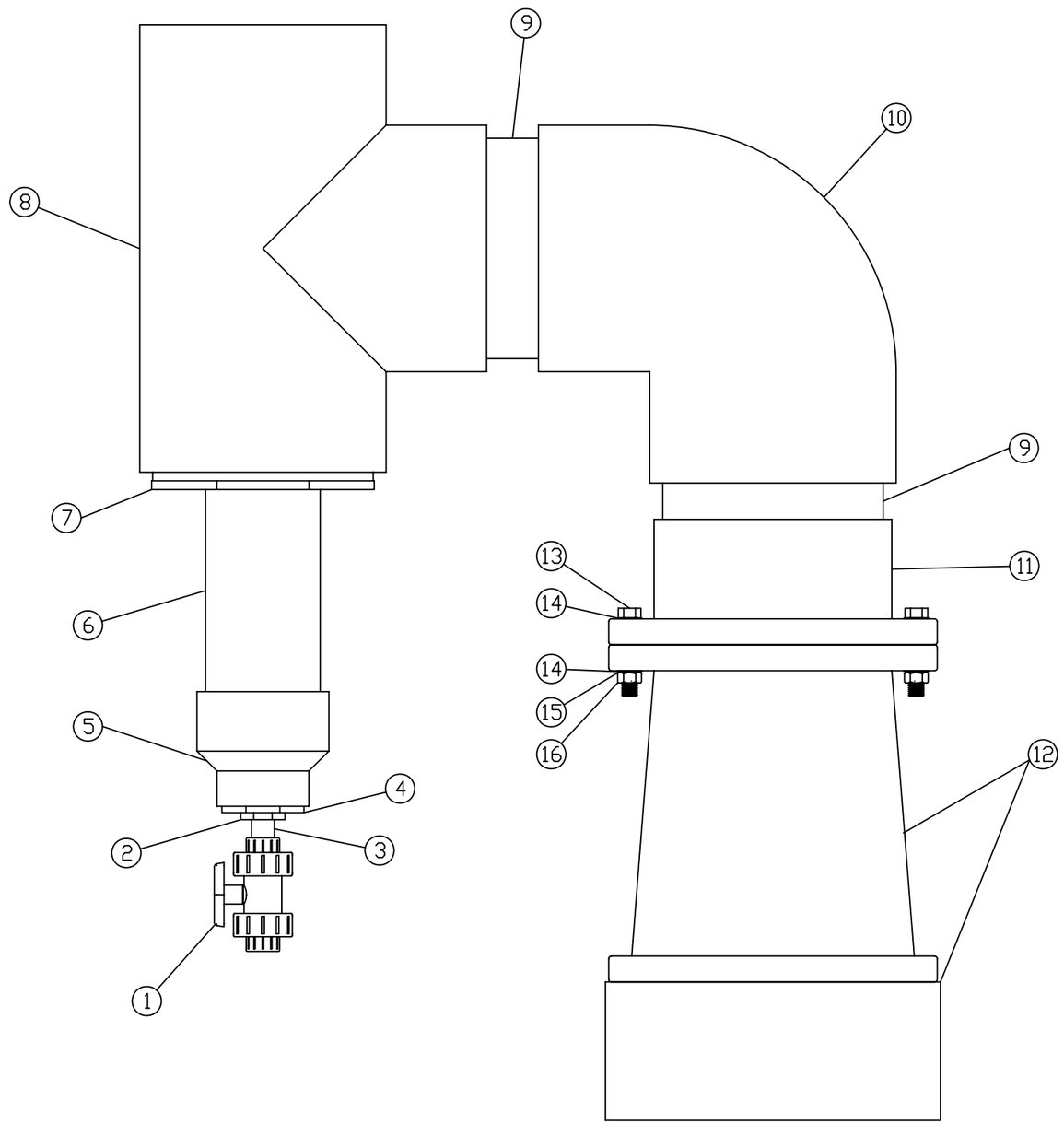

BILL OF MATERIALS

ITEM	QTY	DESCRIPTION	PART NUMBER
1	1	VALVE, 1", TRUE-UNION BALL, PVC/EPDM	5800-343
2	1	REDUCER BUSH 2"S X 1"S PVC SOC SCH 80	5901-019
3	1	PIPE, 1 INCH, PVC, SCH 80, 3.00L	5800-099
4	1	REDUCING BUSH 4" X 2" PVC N80 SPG X SLIP	5901-082
5	1	COUPLING, 6 INCH SOC X 4 INCH SOC	5800-072
6	1	PIPE 6" CLEAR PVC SCH 40 NSF STAMPED, 18.50L	6400-461
7	1	BUSHING, REDUCER, 12" SOC X 6" SOC SCH 80	5601-325
8	1	TEE, 12" SXSXS, PVC, SCH 80	5601-326
9	2	PIPE, 12", PVC, SCH 80, 15.50L	5601-327
10	1	ELBOW, 90, 12", SXS, PVC, SCH 80	5601-328
11	1	FLANGE, VAN STONE, 12 INCH, SCO, PVC, SCH 80	5601-329
12	1	DAMPER,BACKDRAFT, w/ TRANSITION FITTINGS	5601-318
13	12	SCREW, HEX HEAD CAP, 7/8-9 X 4-1/2, 18-8	5601-332
14	24	WASHER, FLAT, 7/8 X 1-3/4, 18-8 SS	5601-333
15	12	WASHER, LOCK, 7/8 INCH, MEDIUM, 18-8 SS	5601-334
16	12	NUT, HEX, 7/8-9, 316 SS	5601-331

SEVERN TRENT SERVICES
CLORTEC
2660 COLUMBIA STREET TORRANCE, CA 90503
TELEPHONE No: (310)-618-9700 E-MAIL:
FAX No: (310)-618-1384 WEB SITE: www.severntrentservices.com

UNLESS OTHERWISE NOTED
TOLERANCES:

TYPE:	INCHES	[MM]
FRACTIONS	± 1/8"	
.X	± .1"	± 2.5
.XX	± .02"	± .51
.XXX	± .005"	± .127
ANGLES	± 1°	

NOTICE OF CONFIDENTIALITY
THIS DOCUMENT CONTAINS PROPRIETARY INFORMATION THAT IS AND SHALL REMAIN THE PROPERTY OF CLORTEC AND IS TO BE RETURNED IMMEDIATELY UPON REQUEST. ITS CONTENTS MAY NOT BE REPRODUCED, DISTRIBUTED, CIRCULATED, OR DISCLOSED TO THIRD PARTIES. RECIPIENT WILL NOT USE THIS INFORMATION FOR PURPOSES OTHER THAN INTENDED WITHOUT PRIOR WRITTEN CONSENT OF CLORTEC.

ASSEMBLY
12" AIR BACKDRAFT DAMPER SPOOL
& CONDENSATE DRIP LEG

SCALE:	CLORTEC JOB No:	SIZE:	REV:
1"=0'-11"	STANDARD	B	0
DWG No: 1000-ABDS-CD-12		SHEET: 1 OF 1	

REV	DATE	DESCRIPTION	DRAWN BY	CHECKED BY	APPROVED BY
0	7/31/06	ISSUE FOR APPROVAL	JB		

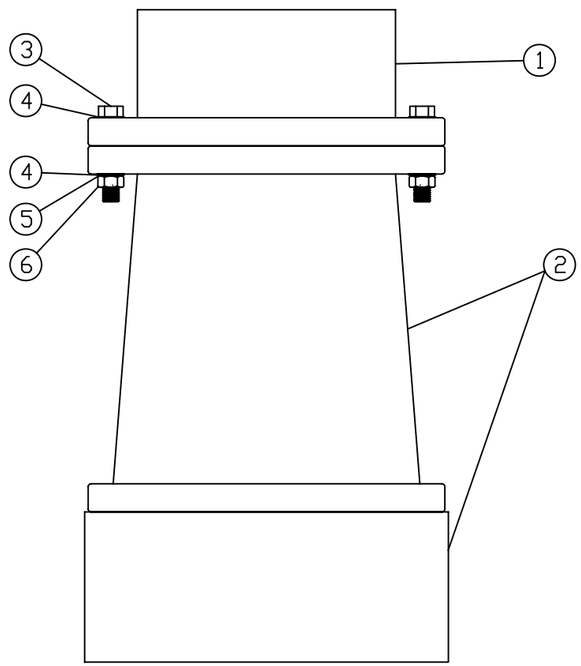

BILL OF MATERIALS			
ITEM	QTY	DESCRIPTION	PART NUMBER
1	1	FLANGE, VAN STONE, 12 INCH, SCO, PVC, SCH 80	5601-329
2	1	DAMPER,BACKDRAFT W/ TRANSITION FITTING	5601-318
3	12	SCREW, HEX HEAD CAP, 7/8-9 X 4-1/2, 18-8	5601-332
4	24	WASHER, FLAT, 7/8 X 1-3/4, 18-8 SS	5601-333
5	12	WASHER, LOCK, 7/8 INCH, MEDIUM, 18-8 SS	5601-334
6	12	NUT, HEX, 7/8-9, 316 SS	5601-331

SEVERN TRENT SERVICES
CLORTEC
2660 COLUMBIA STREET TORRANCE, CA 90503
TELEPHONE No: (310)-618-9700 E-MAIL:
FAX No: (310)-618-1384 WEB SITE: www.severntrentservices.com

UNLESS OTHERWISE NOTED
TOLERANCES:

TYPE:	INCHES	[MM]
FRACTIONS	± 1/8"	
.X	± .1"	± 2.5
.XX	± .02"	± .51
.XXX	± .005"	± .127
ANGLES	± 1°	

NOTICE OF CONFIDENTIALITY
THIS DOCUMENT CONTAINS PROPRIETARY INFORMATION THAT IS AND SHALL REMAIN THE PROPERTY OF CLORTEC AND IS TO BE RETURNED IMMEDIATELY UPON REQUEST. ITS CONTENTS MAY NOT BE REPRODUCED, DISTRIBUTED, CIRCULATED, OR DISCLOSED TO THIRD PARTIES. RECIPIENT WILL NOT USE THIS INFORMATION FOR PURPOSES OTHER THAN INTENDED WITHOUT PRIOR WRITTEN CONSENT OF CLORTEC.

ASSEMBLY
12" AIR BACKDRAFT DAMPER SPOOL

SCALE:	CLORTEC JOB No:	SIZE:	REV:
1"=0'-11"	STANDARD	B	0
DWG No: 1000-ABDS-12		SHEET: 1 OF 1	

Fiberglass Radial Blowers

Series 42 Series 43

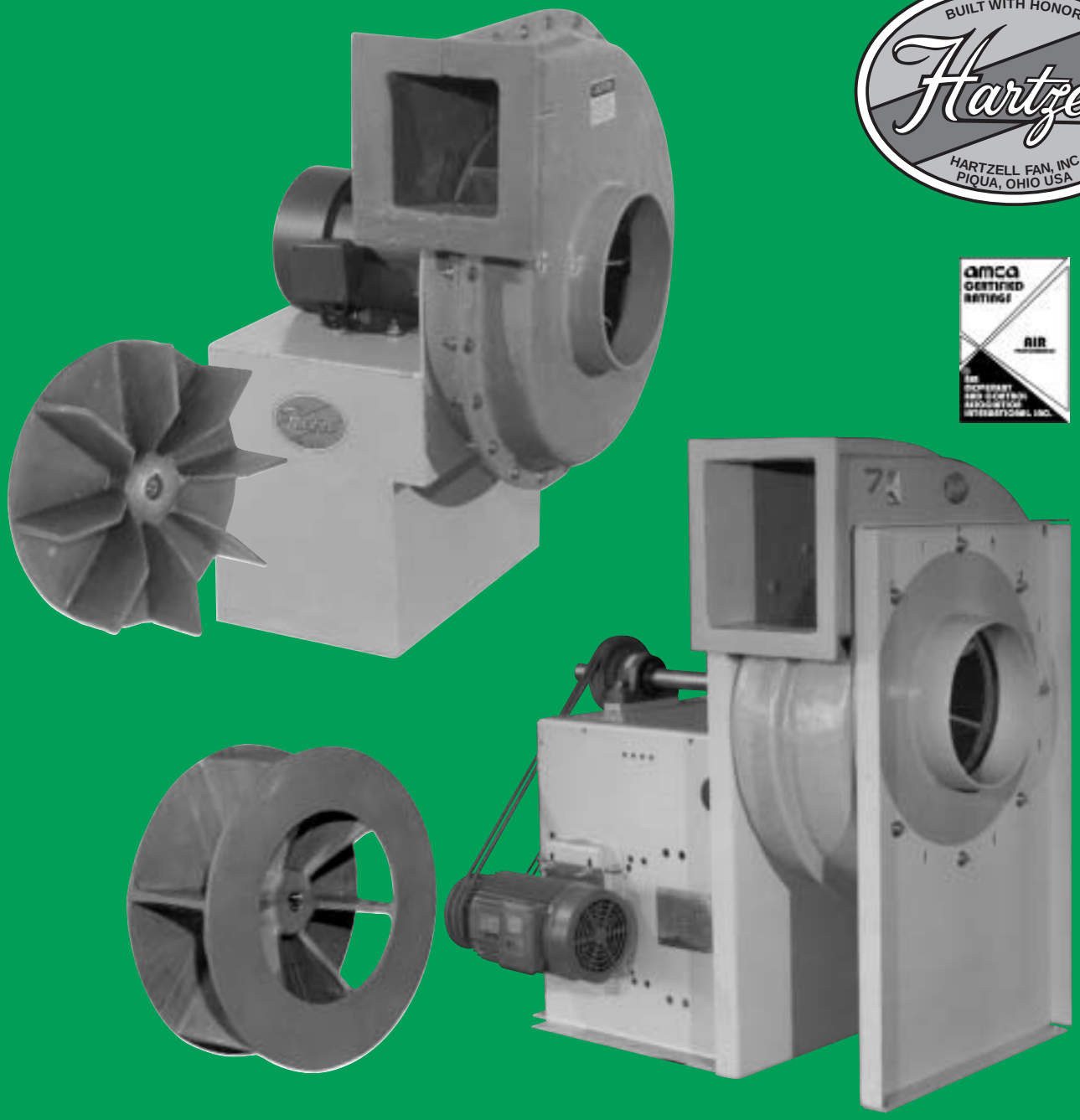

HARTZELL®

Hartzell Fan, Inc., Piqua, Ohio 45356
www.hartzellfan.com

114
Aug.02, 2006

Bulletin A-140-G August 2004

Index

Hartzell Model Code Explanation . . . . . Page 2
General Construction Features
Centrifugal Fan Arrangements . . . . . Page 3
Fiberglass Pressure Blower – Series 42 . . . . . Page 4
Dimensional Drawings – Series 42 . . . . . Page 5
Performance Data – Series 42 . . . . . Page 6
Fiberglass Radial Blower – Series 43 . . . . . Page 7
Dimensional Drawings – Series 43 . . . . . Page 8
Performance Data – Series 43 . . . . . Pages 9-11
Temperature/Altitude Applications . . . . . Page 12
Corrosion Resistance Guide . . . . . Page 13
Options and Accessories . . . . . Pages 14-15

Certified Ratings for Air Performance

Hartzell Fan, Inc. certifies that the Series 42 Fiberglass Pressure Blowers, on page 4; and Series 43 Fiberglass Radial Blowers on pages 7 through 11, are licensed to bear the AMCA seal for air performance. The ratings shown are based on tests and procedures performed in accordance with AMCA Publication 211 and comply with the requirements of the AMCA Certified Ratings Program.

Hartzell Model Code Explanation

Fiberglass Fan Selection

The Hartzell Fiberglass Radial Blower performances on the following pages are based on standard air conditions (sea level, 70°F, and 29.92 inches barometric pressure). Performance data does not include drive losses on belt drive units.

When placing your order, be sure to specify the Hartzell Model Code. The following example demonstrates our coding system.

The illustrated Series Number specifies a Hartzell Series 42 Fan.

Be sure to include fan model, performance requirements, operating temperature, motor data (enclosure, voltage, mounting position, etc.) and a list of required accessory items. (See pages 14 and 15.)

Contact your local Hartzell Sales Representative for assistance.

Hartzell Model Code

A 4 2 – 4 – 1 4 – – F 1 0 0 F G O P I 3

Type
- A – Production Item
- S – Stock Item
- Q – Special Quote

Product Series
Arrangement (centrifugals only)
Size (nominal wheel diameter, inches)
Class/# of Blades (class for centrifugals; # of blades for axial)
Wheel Code
Wheel Width/Blade Angle (width (%) centrifugals/angle axials)
Material of Construction
Motor Enclosure
Motor Horsepower
Motor RPM/Phase

Motor RPM/Phase
3 Phase
2 = 3450
3 = 1750
1 Phase
B = 3450
C = 1750

Motor Horsepower

Horsepower	1/4	1/3	1/2	3/4	1	1 1/2	2	3	5	7 1/2	10	15	20	25	30	40	50	60	75	100	125	150	200
Code Letter	D	E	F	G	H	I	J	K	L	M	N	O	P	Q	R	S	T	U	V	W	X	Y	Z

Example:

Assume a needed performance of 800 CFM at 4" SP, standard air. Reading the 14" rating table on page 6, we find a fan RPM of 2220 and brake horsepower (BHP) of 1.20. Required motor horsepower is 1 1/2.

The model code can be constructed as follows: Type will be a production item (code A), product series for the Fiberglass Radial Blower is 42, arrangement is 4 (code 4), size of the wheel is 14", blade code for this item is F, wheel width is 100% (code 100), material of construction is fiberglass (code FG), motor enclosure is open protected drip proof (code OP), motor horsepower is 1-1/2 (code I), and motor RPM/phase is 1750 (code 3).

Note: All other informational fields must be filled with hyphens/dashes (-) if they are not applicable to the fan being considered.

This bulletin lists Hartzell's complete line of Fiberglass Radial Blowers and accessories. More than 70 Hartzell offices can provide specific performance and installation data to meet your requirements. Call your Hartzell representative for assistance. Visit our website **(www.hartzellfan.com)** or call toll-free **(1-800-336-3267)** for the name of your Hartzell representative.

Construction Features

A variety of corrosion problems plague industry today. Fans and blowers made of coated steel or metals such as stainless and monel can handle some problem areas. Please refer to the corrosion resistance table on page 13 of this bulletin. Fiberglass centrifugal blowers can be used in most applications where corrosive elements exist in fume and vapor form. The resistance to corrosive elements is a major advantage, but the physical properties of fiberglass equipment offer these additional advantages:

- Fiberglass equipment is corrosion resistant.
- Fiberglass equipment weighs 25% less than comparable equipment made of carbon steel.
- Fiberglass has an extremely high strength-to-weight ratio, stronger than steel on a per-pound basis.
- Dimensional stability of fiberglass is excellent.
- Fiberglass air moving equipment will not become brittle at low temperatures and at 0°F the laminated fiberglass will be stronger than at room temperature.

Hartzell Fan, Inc. conforms to ASTM D4167-97, Standard Specification for fiber-reinforced plastic fans and blowers, when optional surfacing veil, electrical grounding, and dynamic balancing to ASTM D4167-97 levels, are added to the fan.

The following are standard Hartzell fiberglass construction features:

- Corrosion resistant polyester resin, having a class I flame spread rate of 25 or less is used for all housings. Vinylester resin having a class I flame spread rate of 30 or less is used for all wheels.
- All structural parts in the airstream are fiberglass and resin. All fiberglass surfaces are protected with a minimum 10-mil thickness of chemical, flame, and ultraviolet resistant resin.
- Shafts are turned, ground, polished, and keyed at both ends with a fiberglass sleeve in the airstream. Shafts are sized to operate well below critical speed. 304 or 316 Stainless steel or monel shafting is available as an option at extra cost.
- Internal hardware (airstream) is Type 304 stainless steel. All internal hardware (airstream) is encapsulated. All external hardware (out of airstream) is zinc plated as standard. Where metal is subject to attack by the corrosive elements being handled, all metal parts can be resin-coated after assembly.
- A fiberglass and neoprene shaft seal is placed where the shaft leaves the housing along with a neoprene shaft slinger between the seal and wheel on belt drive units. (Seal is not gas tight.)
- Bearings on belt drive units are heavy duty, deep row radial ball or double row spherical roller type self-aligning and shielded in cast iron housings. Long inner races insure even load distribution, providing a high radial and thrust load capacity. Bearings are relubricable for continuous service with lubrication tubes extended to the exterior of fan base as necessary.
- V-Belt Drives are oversized for long life and continuous duty as standard. Fixed pitch or variable pitch drives are available upon request. Belts are oil, heat, and static resistant type.

Centrifugal Fan Arrangements

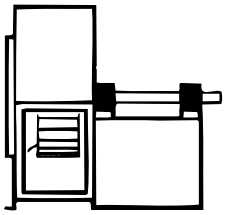

Arrangement 1

Unit furnished with shaft and bearings, less motor and drive. Designed to be driven by a separately mounted motor. Impeller is overhung – two bearings on base. Temperature limitations: 250°F Series 42 or 43.

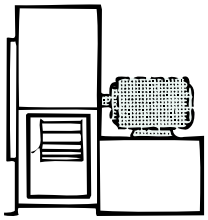

Arrangement 4

Direct drive packaged unit, wheel is overhung and attached to the shaft of the electric motor. No bearings on fan. Temperature limitations: 200°F Series 42 only.

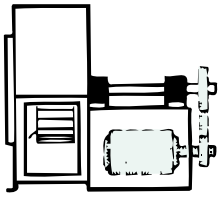

Arrangement 9

Belt drive configuration with motor mounted on outside of bearing base support. Packaged unit, wheel is overhung, slide rail motor base permits easy adjustment of belt tension. Available on either left or right hand side of base (when facing drive end of shaft). Temperature limitations: 250°F Series 43 only.

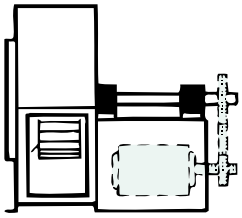

Arrangement 10

Belt drive configuration with motor mounted inside base. Packaged unit, wheel is overhung. Temperature limitations: 250°F Series 42 or 43.

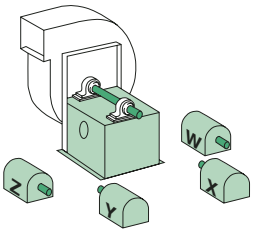

Motor Position Designation

Motor position designation is necessary when ordering the following for Arrangement 1 fans –

1 - V Belt Drive.
2 - Vibration Bases.
3 - Belt Guards.

Note: Location of motor is determined by facing the drive side of the fan and designating the motor position by letters W, X, Y or Z.

Adapted from AMCA Standard 99-2404-03, *Drive Arrangements for Centrifugal Fans*, and AMCA Standard 99-2407-03, *Motor Positions for Belt or Chain Drive Centrifugal Fans*, with written permission from Air Movement and Control Association International, Inc.

Fiberglass Pressure Blower

Series 42

Arrangement 4

Hartzell Fan, Inc. certifies that the Series 42, Fiberglass Pressure Blower, shown hereon is licensed to bear the AMCA Seal. The ratings shown are based on tests and procedures performed in accordance with AMCA Publication 211 and comply with the requirements of the AMCA Certified Ratings Program.

Type F Wheel (Series 42)

Blowers available in SWSI only

Particularly suited for lab hood installations, the corrosive resistant direct drive pressure blower moves air at static pressures up to 12". The housing is constructed with a special corrosion resistant polyester resin having a Class I flame spread rate of 25 or less. The wheel is made using a special corrosion resistant vinylester resin having a Class I flame spread rate of 30 or less. There are no metal parts exposed in the airstream. All internal hardware is 300 series stainless steel encapsulated.

Features

- **Sizes –** 10", 12" and 14" wheel diameters.
- **Arrangement –** available in Arrangements 4 or 10.
- **Temperature Limitations –** suitable for temperatures up to 200° F. See Table 3, page 12 for maximum safe speed correction factors at high temperatures.
- **FRP Materials –** solid fiberglass wheel molded with Dow Derakane 510-A vinylester resin. Other standard FRP components constructed of fiberglass and Ashland Hetron 693 resin. See Corrosion Resistance Guide on page 13 for resin characteristics. Other resins are available.
- **Rotation – clockwise rotation standard.** Counterclockwise rotation available.
- **Discharges –** available discharges shown on page 5. **Rotatable in field.**
- **Easy installation and maintenance –** motors are readily accessible for ease in wiring, installation, adjustment and lubrication.
- **Wheel –** flat blade radial design of one-piece construction, die formed of individual laminations of fiberglass. **Wheel Type F.**
- **Motors –** are available to your specifications, mounted and test run at the factory prior to shipment.
- **Drive Assembly (Belt Drive Fans) –** belts are oil, heat and static resistant type, oversized for continuous duty. Shafts are turned, ground and polished, keyed at both ends.
- **Bearings (Belt Drive Fans) –** heavy-duty, self-aligning, pillow block bearings are standard.
- **Shafts (Belt Drive Fans) –** turned, ground and polished. Fiberglass enclosed in the airstream. Stainless steel (304 or 316) or monel shafting is available as an option at extra cost.
- **Shaft Seal (Belt Drive Fans) –** a fiberglass and neoprene shaft seal is placed where the shaft leaves the housing along with a neoprene shaft slinger between the seal and wheel on belt drive units. Seal is not gas tight.
- **Flanged outlets are standard.** Inlet flanges are optional. Drilling of flanges is optional.
- **Bases –** heavy gauge hot rolled steel, epoxy coated.
- **All units are test run** and **electronically balanced** before shipment.
- **Accessories –** See pages 14 and 15.

Series 42 - Arrangement 10

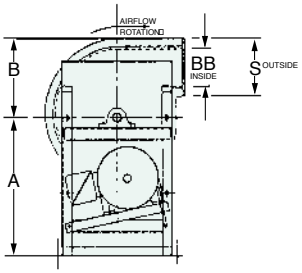

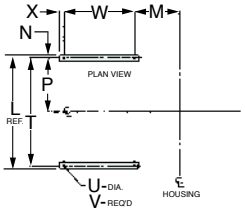

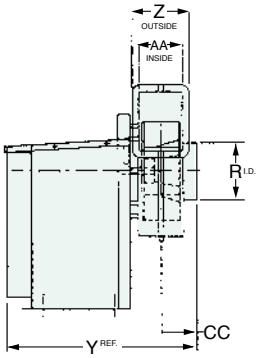

Principal Dimensions – Arrangement 10

Fan Size	A	B	C	D	E	F	G	H	J	L	M	N	P	R
10	18 1/16	10 5/8	9	9 5/8	10 1/8	13 7/8	9 1/8	8 5/8	8 1/8	21 1/4	6 15/16	3/4	9 7/8	6
12	18 1/16	11 5/8	10	10 5/8	11 1/8	15 5/16	10 1/8	9 5/8	9 1/8	21 1/4	7 5/16	3/4	9 7/8	7
14	18 1/16	12 5/8	11	11 5/8	12 1/8	16 3/4	11 1/8	10 5/8	10 1/8	21 1/4	7 9/16	3/4	9 7/8	8

Fan Size	S	T	U	V	W	X	Y	Z	AA	BB	CC	Max. Motor Frame*	Max. Wgt. is Less Motor Wgt. & Accessories
10	7 7/16	19 3/4	9/16	4	12	2	30 1/16	7	3 3/4	4 3/16	4 1/4	182T	85
12	8 1/4	19 3/4	9/16	4	12	2	30 7/16	7 3/4	4 1/2	5	4 5/8	182T	90
14	9 1/4	19 3/4	9/16	4	12	2	31 5/16	8 1/4	5	6	4 7/8	182T	100

NOTE: Dimensions and specifications are subject to change. Certified prints are available.
*** For motor frame sizes larger than standard 182T, contact factory.**

Series 42 - Arrangement 4

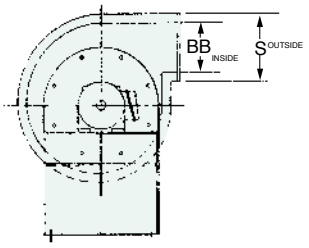

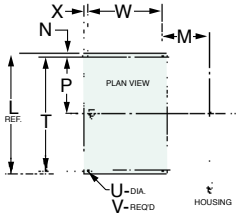

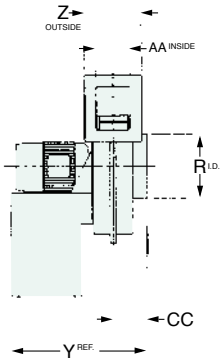

Principal Dimensions – Arrangement 4

Fan Size	A	B	C	D	E	F	G	H	J	K	L	M	N	P	R
10	12 1/8	10 5/8	9	9 5/8	10 1/8	13 7/8	9 1/8	8 5/8	8 1/8	1 7/8	13	5 3/8	1	5 1/2	6
12	14 1/8	11 5/8	10	10 5/8	11 1/8	15 5/16	10 1/8	9 5/8	9 1/8	1 3/8	14 1/2	5 3/4	1	6 1/4	7
14	16 1/8	12 5/8	11	11 5/8	12 1/8	16 3/4	11 1/8	10 5/8	10 1/8	7/8	15 1/2	5 3/8	1	6 3/4	8

Fan Size	S	T	U	V	W	X	Y	Z	AA	BB	CC	Min. Motor Frame	Max. Motor Frame	Max. Wgt. is Less Motor Wgt. & Accessories
10	7 7/16	11	7/16	4	4 7/8	1"	15 11/16	7	3 3/4	4 3/16	4 1/4	56	143T	63
12	8 1/4	12 1/2	7/16	4	5 3/8	1"	16 15/16	7 3/4	4 1/2	5	4 5/8	56	184T	78
14	9 1/4	13 1/2	7/16	4	7 3/4	1"	19 3/16	8 1/4	5	6	4 7/8	145T	213T	97

NOTE: Dimensions and specifications are subject to change. Certified prints are available.

Fan Discharges

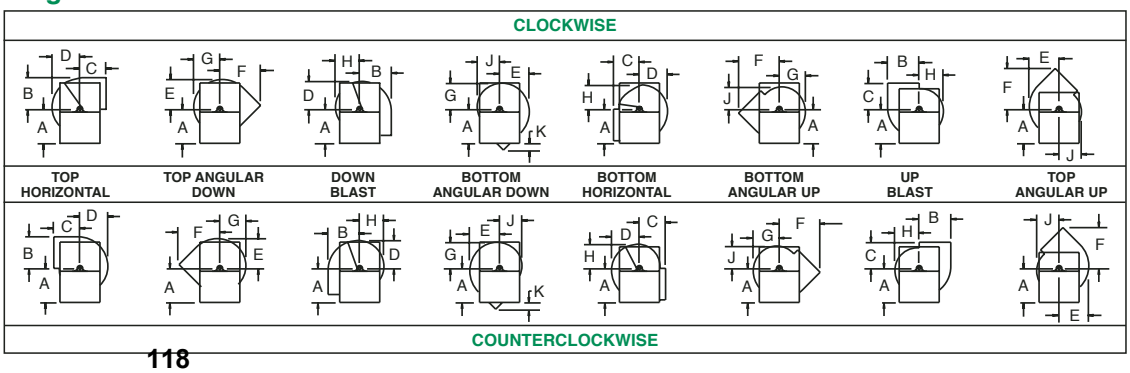

Performance Data

Size 10, A42-_ -10 - - F100FG___ _ _

Outlet Area – 0.102 sq. ft. inside
Wheel Diameter – 10.5 in.
Wheel Circumference – 2.75 ft.

	Outlet Velocity	Static Pressure																	
		1"		2"		3"		4"		5"		6"		8"		10"		12"	
CFM	FPM	RPM	BHP	RPM	BHP	RPM	BHP	RPM	BHP	RPM	BHP	RPM	BHP	RPM	BHP	RPM	BHP	RPM	BHP
100	980	1348	0.06	1863	0.14	2264	0.25												
150	1471	1424	0.08	1918	0.17	2309	0.28	2643	0.41	2939	0.56	3208	0.71						
200	1961	1522	0.11	1993	0.20	2371	0.33	2696	0.46	2987	0.62	3252	0.78	3726	1.14	4147	1.55	4528	1.99
250	2451	1645	0.15	2085	0.25	2449	0.38	2765	0.53	3049	0.69	3309	0.86	3775	1.24	4190	1.66	4568	2.12
300	2941	1793	0.20	2190	0.34	2541	0.45	2848	0.60	3123	0.78	3377	0.96	3835	1.35	4244	1.79	4617	2.26
350	3431	1955	0.27	2317	0.43	2644	0.58	2942	0.71	3210	0.87	3457	1.06	3905	1.49	4307	1.94	4675	2.42
400	3922	2126	0.35	2461	0.52	2762	0.72	3044	0.87	3306	1.02	3547	1.20	3985	1.63	4379	2.11	4741	2.61
450	4412	2300	0.45	2617	0.63	2898	0.85	3159	1.06	3409	1.23	3645	1.40	4074	1.79	4460	2.28	4815	2.82
500	4902	2477	0.56	2782	0.77	3045	0.99	3291	1.23	3524	1.47	3750	1.66	4170	2.02	4549	2.49	4898	3.03
550	5392	2658	0.71	2952	0.93	3202	1.16	3434	1.41	3655	1.68	3866	1.95	4271	2.36	4644	2.77		
600	5882	2843	0.87	3126	1.11	3366	1.36	3585	1.62	3795	1.91	3997	2.20	4381	2.73	4744	3.16		
650	6373	3032	1.06	3300	1.32	3535	1.59	3745	1.86	3944	2.15	4137	2.47	4502	3.10	4851	3.62		
700	6863	3224	1.28	3477	1.56	3708	1.84	3911	2.13	4101	2.43	4284	2.75	4634	3.44				
750	7353	3418	1.54	3657	1.83	3881	2.13	4080	2.44	4264	2.75	4439	3.08	4775	3.79				
800	7843	3615	1.82	3841	2.13	4055	2.45	4252	2.78	4431	3.11	4600	3.45	4922	4.17				

Size 12, A42-_ -12 - - F100FG___ _ _

Outlet Area – 0.148 sq. ft. inside
Wheel Diameter – 12.5 in.
Wheel Circumference – 3.27 ft.

	Outlet Velocity	Static Pressure																	
		1"		2"		3"		4"		5"		6"		8"		10"		12"	
CFM	FPM	RPM	BHP	RPM	BHP	RPM	BHP	RPM	BHP	RPM	BHP	RPM	BHP	RPM	BHP	RPM	BHP	RPM	BHP
180	1216	1137	0.08	1563	0.18	1893	0.29	2174	0.43										
240	1622	1179	0.10	1599	0.21	1926	0.34	2202	0.48	2447	0.64	2670	0.81	3069	1.20				
300	2027	1239	0.13	1637	0.25	1962	0.39	2238	0.55	2480	0.71	2700	0.89	3093	1.29	3443	1.73	3761	2.21
360	2432	1310	0.16	1686	0.30	1999	0.45	2274	0.62	2518	0.80	2736	0.99	3126	1.40	3471	1.86	3785	2.35
420	2838	1390	0.21	1747	0.35	2046	0.52	2312	0.70	2553	0.89	2773	1.10	3162	1.53	3505	2.01	3816	2.52
480	3243	1478	0.26	1816	0.42	2103	0.60	2358	0.79	2592	0.99	2809	1.21	3199	1.67	3542	2.17	3852	2.70
540	3649	1572	0.33	1893	0.50	2168	0.69	2414	0.89	2640	1.11	2849	1.33	3234	1.82	3578	2.35	3889	2.91
600	4054	1671	0.41	1975	0.60	2239	0.80	2477	1.01	2696	1.24	2899	1.47	3273	1.98	3614	2.53	3925	3.12
660	4459	1774	0.50	2062	0.70	2316	0.92	2546	1.15	2758	1.38	2956	1.63	3319	2.16	3652	2.73	3960	3.34
720	4865	1878	0.61	2154	0.83	2398	1.06	2620	1.30	2825	1.55	3018	1.81	3372	2.36	3696	2.95	3999	3.58
780	5270	1984	0.73	2250	0.97	2484	1.21	2698	1.47	2898	1.73	3085	2.00	3431	2.58	3747	3.19	4042	3.84
840	5676	2090	0.87	2349	1.13	2573	1.39	2781	1.66	2974	1.93	3156	2.22	3494	2.82	3804	3.46	4092	4.13
900	6081	2197	1.02	2451	1.30	2666	1.58	2867	1.86	3055	2.16	3232	2.46	3561	3.08	3864	3.74	4147	4.43
960	6486	2305	1.20	2555	1.50	2763	1.79	2956	2.09	3139	2.40	3311	2.72	3632	3.37	3929	4.05		
1020	6892	2414	1.39	2660	1.72	2863	2.03	3049	2.34	3226	2.67	3394	3.00	3707	3.68	3997	4.39		

Size 14, A42-_ -14 - - F100FG___ _ _

Outlet Area – 0.198 sq. ft. inside
Wheel Diameter – 14.5 in.
Wheel Circumference – 3.80 ft.

	Outlet Velocity	Static Pressure																	
		1"		2"		3"		4"		5"		6"		8"		10"		12"	
CFM	FPM	RPM	BHP	RPM	BHP	RPM	BHP	RPM	BHP	RPM	BHP	RPM	BHP	RPM	BHP	RPM	BHP	RPM	BHP
240	1212	982	0.08	1348	0.17	1638	0.29	1887	0.42										
320	1616	1037	0.11	1379	0.21	1660	0.34	1901	0.47	2117	0.63	2313	0.79	2670	1.16				
400	2020	1110	0.15	1426	0.27	1693	0.40	1928	0.55	2139	0.71	2331	0.88	2676	1.26	2985	1.69	3269	2.15
480	2424	1193	0.20	1489	0.34	1740	0.48	1964	0.64	2169	0.81	2358	0.99	2697	1.39	2999	1.82	3276	2.30
560	2828	1281	0.26	1564	0.42	1800	0.58	2013	0.75	2209	0.93	2392	1.12	2724	1.54	3023	1.99	3294	2.48
640	3232	1372	0.34	1647	0.51	1871	0.69	2073	0.88	2261	1.08	2436	1.28	2759	1.71	3051	2.18	3320	2.69
720	3636	1466	0.43	1732	0.62	1950	0.82	2143	1.03	2322	1.25	2490	1.46	2801	1.92	3086	2.41	3350	2.93
800	4040	1563	0.53	1821	0.75	2034	0.97	2220	1.20	2391	1.43	2553	1.67	2853	2.15	3129	2.66	3387	3.21
880	4444	1664	0.66	1912	0.90	2120	1.14	2302	1.38	2468	1.63	2623	1.89	2912	2.41	3180	2.95	3430	3.51
960	4848	1769	0.81	2004	1.07	2208	1.33	2387	1.59	2549	1.86	2699	2.14	2978	2.70	3238	3.27	3481	3.86
1040	5253	1877	0.98	2099	1.26	2299	1.55	2474	1.83	2633	2.11	2780	2.40	3051	3.01	3301	3.62	3538	4.24
1120	5657	1986	1.19	2196	1.47	2390	1.78	2563	2.09	2719	2.39	2864	2.70	3128	3.34	3371	3.99		
1200	6061	2097	1.42	2296	1.71	2483	2.04	2653	2.38	2807	2.70	2949	3.03	3210	3.70	3447	4.39		
1280	6465	2209	1.68	2400	1.99	2578	2.33	2745	2.69	2896	3.04	3037	3.39	3293	4.09	3526	4.81		
1360	6869	2322	1.97	2505	2.30	2675	2.65	2837	3.03	2988	3.41	3125	3.78	3378	4.52				

Performance shown is for belt drive fans, installation Type D: ducted inlet/ducted outlet. Power ratings (BHP) do not include drive losses. Performance ratings do not include the effects of appurtenances in the airstream. *MOST EFFICIENT FAN SELECTION APPEARS IN SHADED PRINT.* To complete the model code, add arrangement, motor enclosure code, motor horsepower code and motor speed code. See page 2 for the complete Hartzell Model Code Explanation and example.

A42-4-_ _ --F100FG___ _ _ (Direct Drive)

Size	Model	Motor HP	Motor (Fan) RPM	Peak Fan BHP	Cubic Feet Per Minute AT Static Pressure																
					0"	1/2"	1"	1½"	2"	2½"	3"	4"	5"	6"	7"	8"	9"	10"	11"	12"	13"
10	A42-4-10--F100FG_ _F3	½	1725	0.20	408	346	278	173													
	A42-4-10--F100FG_ _I2	1½	3450	1.60		788	758	726	692	658	625	556	469	346							
12	A42-4-12--F100FG_ _F3	½	1725	0.57	837	731	632	530	399	158											
	A42-4-12--F100FG_ _K2	3	3500	3.38										1094	979	846	675	411			
	A42-4-12--F100FG_ _L2	5	3500	3.38										1094	979	846	675	411			
14	A42-4-14--F100FG_ _H3	1	1725	0.91	1109	1020	927	822	713	602	457										
	A42-4-14--F100FG_ _L2	5	3500	5.45											1579	1472	1364	1255	1135	988	780
	A42-4-14--F100FG_ _M2	7½	3500	5.45											1579	1472	1364	1255	1135	988	780

Performance shown is for installation Type D: ducted inlet/ducted outlet. Performance ratings are based on standard air conditions (0.075 lbs/cu. ft). Performance ratings do not include the effects of appurtenances in the airstream. *CFM exceeds 8,000 FPM outlet velocity, please contact factory. MOST EFFICIENT FAN SELECTION APPEARS IN SHADED PRINT.* Bold type information provided in the Rating Table above is needed when preparing a model code. See page 2 for the complete Hartzell Model Code Explanation and example.

Temperature/Altitude Applications

When a fan operates in ambient conditions, generally it is handling standard air at 70°F, 29.92" barometric pressure, weighing 0.075 lbs./cu. ft. For an application where the fan operates at other than ambient conditions (temperature, altitude, or both), correction factors must be applied to the selection of the fan. In addition, the standard construction of the fan must be modified.

Correction factors for temperatures and altitudes are provided in Table 1. When a fan operates at other than ambient conditions, the correction factors in Table 1 will be required to correct static pressure and horsepower.

Table 2 shows the maximum safe operating speeds for each size fan wheel.

At high temperatures, these maximum safe operating speeds should be derated. Table 3 provides maximum safe speed correction factors by temperature and material construction.

An example on the use of these tables appears at the bottom of this page.

Table 1 Altitude/Temperature Correction Factors

Temp. ① (°F)	–50	–25	0	25	50	70	100	125	150	175	200
Factor	0.77	0.82	0.87	0.91	0.96	1.00	1.06	1.10	1.15	1.20	1.25

Alt. ② (Ft.)	0	1000	2000	3000	4000	5000	6000	7000	8000	9000	10000	11000	12000
Factor	1.00	1.04	1.08	1.12	1.16	1.20	1.25	1.30	1.35	1.40	1.46	1.51	1.57

Above table has inverted values. Actual density is the reciprocal of the above values.
① At sea level.
② At 70°F.
For corrections involving both temperature and altitude, correction factors should be multiplied.
Example: 150°F at 7000 ft.
Temperature factor 1.15 x altitude factor 1.30 = 1.50 combined correction factor.

Table 2 Maximum Safe Speeds @ 70°F

SERIES 42	
Size	Max. Speed
10	4000
12	4000
14	3600

Maximum Operating Temperature: 200°F (Arrg. 4)
250°F (Arrg. 10)

SERIES 43	
Size	Max. Speed
16	3667
19	2995
23	2532
26	2193
30	1934
33	1736

Table 3 Maximum Safe Speed Correction Factors*

Temp.	0° F	70°	100°	150°	175°	200°	225°	250°
FRP	1.00	1.00	1.00	.98	.945	.91	.82	.70

***To correct maximum safe operating speeds (Table 2) for high temperatures, multiply those speeds by correction factors from Table 3.**

Use of Altitude – Temperature Correction Table

First select size, RPM and BHP of the blower needed.

If temperature or altitude is involved, correct to standard air. Example: Assume the required performance to be 10,200 CFM at 6.15" SP 175°F and 2000 feet altitude.

1. Temperature factor 1.20 x altitude factor 1.08 = 1.30 combined correction factor.
2. 6.15" SP x 1.30 = 8" SP for 70°F at sea level.
3. A Series 43, size 33" belt drive radial centrifugal, selected from the rating tables (page 11) for the new condition shows 10,200 CFM at 8" SP, 1451 RPM and 31.5 BHP.
4. Correct the horsepower and static pressure in item 3 to non-standard performance by dividing by factor: 8" SP divided by 1.30 = 6.15" SP; 31.5 BHP divided by 1.30 = 24.23 BHP.
5. Check the maximum safe speed. Maximum speed at 70°F, for fan size 33", 1736 RPM. Using the maximum safe speed factor table for fiberglass construction yields a safe speed factor of .945. The maximum safe speed is 1736 x .945 = 1640 RPM; thus operation at 1451 RPM at 175°F is satisfactory.
6. Final performance of the unit at the assumed conditions: 10,200 CFM at 6.15" SP, 1451 RPM, 24.23 BHP at 175°F and 2,000 feet altitude.

Corrosion Resistance Guide

Temperature values shown are for immersion or condensate contact applications. Where temperature values are shown, resin is suitable for hood and duct type applications for the full operating temperature range of the product. See product specifications for materials of construction and maximum operating temperature limits.

Environment	Hetron 693 Ashland F.	6694 Reichold F.	510A Dow F.
ACIDS			
Acetic to 10%	180	200	210
Acetic to 50%	90	160	180
Acetic to 100%		NR	NR
Acrylic to 25%	–	100	100
Benzene Sulfonic to 25%	180	210	150
Benzene Sulfonic 25% up	90	210	NR
Benzoic	250	220	210
Boric	180	220	210
Butyric to 50%	150	150	210
Butyric 50% up	–	100	80
Carbonic	160	220	NR
Chloroacetic to 25%	NR	*180	*150
Chloroacetic 25% to 50%	NR	*150	*120
Chromic to 5%	100	110	150
Chromic to 10% to 20%	–	NR	150
Citic	*200	*220	*210
Fluoboric	*S90	*S220	*S210
Gluosilicic up to 10%	S100	S150	S180
Formic up to 10%	200	150	180
Gluconic to 50%	120	180	180
Hydrobromic to 25%	*160	*170	*180
Hydrochloric to 15%	*230	*210	*180
Hydrocyanic to 10%	200	170	210
Hydrofluoric to 10%	***S100	***S150	***S150
Hydrofluorsilicic up to 10%	*S100	*S150	*S180
Hypochlorous to 20%	90	110	NR
Lactic	*200	*220	*210
Maleic	170	210	210
Nitric to 5%	200	170	150
Nitric 5% to 20%	–	140	120
Oleic	200	220	210
Oxalic	*220	*220	*210
Perchloric to 10%	H&D	**150	**150
Phosphoric	*220	*S210	*S210
Phosphoric, super	–	*S210	*S210
Phthalic Anhydride	*150	*210	*210
Picric to 10%	100	170	NR
Silicic	–	220	NR
Stearic	200	220	210
Sulfamic to 25%	160	150	NR
Sulfuric to 25%	*200	*220	*210
Sulfuric to 50%	*200	*200	*180
Sulfuric to 70%	*150	*180	*100
Sulfuric to 80%	NR	80	NR
Sulfurous to 10%	90	110	120
Tannic	200	220	210
Tartaric	220	220	210
Trichoroacetic to 50%	*90	*220	*200
ALCOHOLS			
Amyl	200	210	120
Benzyl	NR	100	NR
Butyl	190	150	120
Ethyl	90	120	80
Methyl	90	80	NR
GASES AND VAPORS			
Ammonia, Dry	90	170	100
Ammonia, Wet	90	NR	NR
Bromine, Wet	90	*100	NR
Carbon Dioxide	250	250	250
Carbon Monoxide	200	250	250
Chlorine, Dry	*200	*210	NR
Florine	–	NR	80
Hydrogen Fluoride, Vapor	*90	*S180	*S180
Hydrogen Sulfide to 5%	250	240	180
Sulfur Dioxide, Dry	200	250	210
Sulfur Dioxide, Wet	200	250	210
Sulfur Trioxide, Wet	–	220	210

Environment	Hetron 693 Ashland F.	6694 Reichold F.	510A Dow F.
ALKALIES (Synthetic Veil)			
Ammonium Bicarbonate to 50%	140	S170	160
Ammonium Carbonate	120	S140	150
Ammonium Hydroxide to 5%	S90	S180	S180
Ammonium Hydroxide to 10%	S90	S170	S150
Ammonium Hydroxide to 29%	NR	S100	S100
Barium Carbonate	180	S240	210
Barium Hydroxide to 10%	–	S170	150
Calcium Hydroxide to 15%	160	S210	S180
Magnesium Carbonate	160	S210	180
Potassium Bicarbonate to 10%	90	S170	S150
Potassium Carbonate to 10%	90	S180	S150
Potassium Hydroxide to 25%	NR	S120	S150
Sodium Bicarbonate to 10%	140	S210	S180
Sodium Carbonate to 35%	90	S180	S180
Sodium Hydroxide to 10%	NR	S160	S180
Sodium Hydroxide to 25%	NR	S160	S180
Sodium Sulfide	90	S220	S210
Trisodium Phosphate to 50%	–	S175	210
SALTS			
Aluminum Chloride	*120	*240	*210
Aluminum Potassium Sulfate	160	240	210
Aluminum Sulfate	250	240	210
Ammonium Chloride	*200	*220	*210
Ammonium Nitrate	200	220	220
Ammonium Persulfate	150	200	180
Ammonium Persulfate, saturate	150	NR	NR
Ammonium Sulfate	200	220	220
Aniline Sulfate to 25%	150	220	210
Aniline Sulfate, saturated	150	220	NR
Barium Chloride	200	240	210
Barium Sulfide	NR	S210	180
Calcium Chlorate	180	220	220
Calcium Chloride	250	240	220
Calcium Sulfate	*200	*240	*210
Copper Chloride	*250	*220	*220
Copper Cyanide	90	S220	210
Copper Fluoride	NR	S170	NR
Copper Sulfate	250	240	210
Ferric Chloride	*250	*220	*210
Ferric Nitrate	170	220	210
Ferric Sulfate	200	220	210
Ferrous Chloride	*220	*220	*210
Ferrous Nitrate	160	220	210
Ferrous Sulfate	220	220	210
Lead Acetate	160	220	210
Magnesium Chloride	220	240	210
Magnesium Hydroxide	–	S210	210
Magnesium Sulfate	200	210	210
Mercuric Chloride	*210	*220	*210
Mercurous Chloride	210	220	210
Nickel Chloride	220	220	210
Nickel Nitrate	220	220	210
Nickel Sulfate	220	220	210
Potassium Chloride	200	240	210
Potassium Dichromate	200	220	210
Potassium Ferricyanide	200	220	210
Potassium Nitrate	200	220	210
Potassium Permangnate	150	210	210
Potassium Persulfate	90	220	210
Potassium Sulfate	200	240	210
Silver Nitrate	200	220	210
Sodium Acetate	150	220	210
Sodium Bisulfate	200	220	210
Sodium Chloride	200	240	180
Sodium Chlorite to 10%	175	170	150
Sodium Cyanide	100	220	210
Sodium Dichromate	160	220	210

Environment	Hetron 693 Ashland F.	6694 Reichold F.	510A Dow F.
SALTS (cont'd.)			
Sodium Ferricyanide	220	220	210
Sodium Floride	–	S180	S180
Sodium Nitrate	220	220	210
Sodium Nitrite		220	NR
Sodium Silicate PH less than 1	160	210	NR
Sodium Sulfate	180	240	210
Sodium Sulfite	–	220	210
Stannic Chloride	*180	*220	*210
Stannous Chloride	*200	*220	*210
Zinc Chloride	200	*220	*210
Zinc Nitrate	180	220	210
Zinc Sulfite	150	220	NR
SOLVENTS			
Acetone to 10%	NR	180	180
Benzene	90	80	NR
Carbon Disulfide	NR	NR	NR
Carbon Tetrachloride	90 VAPOR	110	150
Chlorobenzene	NR	NR	NR
Ethyl Acetate	NR	NR	NR
Ethyl Chloride	90 VAPOR	NR	NR
Ethylene Dibromide	NR	NR	NR
Ethylene Glycol	250	220	210
n-Heptane	120	210	210
Hexane	–	150	160
Methyl Ethyl Ketone to 10%	NR	80	NR
Naphtha	200	210	180
Naphthalene	130	220	210
Tetrachloroethylene	NR	100	80
Toluene	90	NR	80
Xylene	90	80	80
BLEACHES			
Calcium Chlorate	180	220	220
Calcium Hypochlorite	100	NR	S160
Chlorine Dioxide up to 15%	–	160	*200
Chlorine Water	*125	*210	*200
Hydrogen Peroxide to 30%	120	100	150
Sodium Chlorate	90	210	210
Sodium Hypochlorite to 15%	NR	125	S180
OTHERS			
Alum. Chlorohydroxide to 50%	–	220	210
Ammonium Phosphate	150	210	210
Aqua Regia	NR	*80	NR
Detergents	120	170	150
Glycerine	200	220	210
Kerosene	120	210	180
Photographic Solutions	–	80	NR
Perchlorethylene	NR	100	80
Sodium Tetraborate	180	S210	180
Sodium Tripolyphosphate	125	210	210
Sodium Xylene Sulfonate	–	170	160
Sorbitol Solutions	180	220	160
Urea	90	170	150
Urea-Ammonium-Nitrate	–	120	120
Fertilizer Fumes	100	120	150
Shell-D-D	NR	100	NR
Steam Vapor	180	210	180

Reference
C.R.G.1.1

NOTES: NR = Not Recommended S = Synthetic surfacing veil or mat required. Contact factory. "–" = No test data available

*** Special shaft and hardware required, contact factory.**
**** Special design considerations required (explosive environment), contact factory.**
***** Do not use HartKoate. Special shaft and hardware required, contact factory.**
For environments not shown, or when temperatures exceed the maximum listed, contact factory.
Hydrocarbon fuel environments may require static grounding, contact factory.
Do not use HartKoate (Alum. Oxide) with Hydrofluoric acid.

Options and Accessories

Drain

Fiberglass half coupling assembled in housing, NPT female threaded fitting. 1" NPT on Series 43; sizes 30" and 33", ½" NPT on Series 42 and Series 43, sizes 16"-26".

Inspection Door

Allows periodic visual inspection of wheel – fastened with stainless steel bolts and gasketed for tight seal. Available for Series 43.

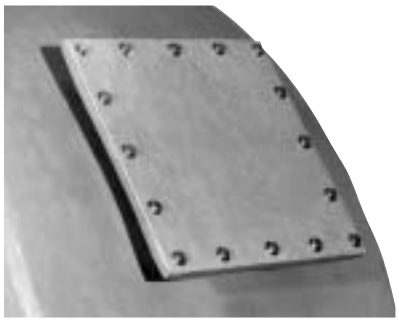

Flanged Inlet

Fiberglass inlet flange is available. Flanges are drilled upon request. Flanged and drilled inlet is required when inlet control damper is furnished.

Disconnect Switch

On-off switch mounted to the unit to provide safety during maintenance. Series 43 units.

Inlet Boxes

Solid fiberglass construction. Inlet box improves entry conditions and minimizes losses which are generally associated with duct elbows at the fan inlet. Inlet boxes are designed for specific applications. Contact factory.

Arrangement 1 Sub-Base

Common structural support for Arrangement 1 fan and motor. Specify motor mounting position. Epoxy coated steel. Series 43 only.

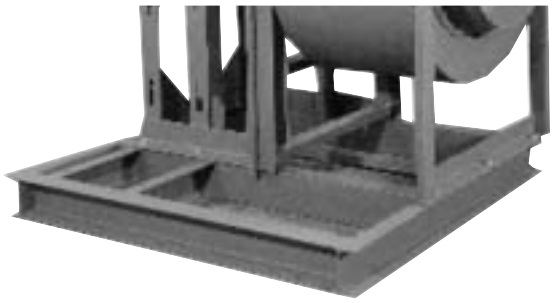

Vibration Isolators

Rubber-in-shear or spring type isolators available on all models.

Drive Guards

Encloses the drive assembly while permitting circulation of ambient air. Standard features include: tach opening, belt tension openings and adjustable length.

Shaft Guard
Arrangement 9 or 1

Belt Drive Guard
Arrangement 9

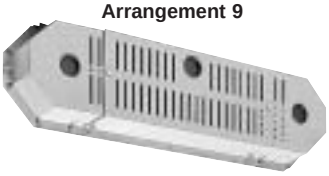

Inlet and Outlet Guards

Spiral ring guard offers protection on inlet side and a wire mesh guard can be furnished for the outlet side. Guards are epoxy coated steel.

Combination Drive Guard and Weather Cover

Covers motor and shaft sheaves as well as belts. Combines guarding the drive as well as protection from the weather. Epoxy coated steel. Specify fan arrangement.

Arrangement 9
Series 43

General Construction Options

Abrasive/Erosive Resistant Coating

HartKoate is an abrasive/erosive resistant coating developed by Hartzell Fan for application in environments where abrasive/erosive conditions may exist. HartKoate helps prevent premature deterioration of equipment in environments where uncoated fans may fail.

Impact resistant HartKoate is applied to a 50-60 mil thickness suitable for temperatures to 200°F.

HartKoate is particularly appropriate for use when water mist and/or abrasive particles exist in the airstream.

Contact your Hartzell representative for further details concerning the application of HartKoate coating to fiberglass fans in corrosive atmospheres.

Hi-Cor Construction

All airstream surfaces exposed to corrosive environment will be protected with a layer of Synthetic (Nexus) surfacing veil. An additional final coat of resin will be applied for extra corrosion resistance.

When Hi-Cor construction is required, the factory should be consulted concerning the corrosive environment involved.

Electically Grounded Fiberglass Fans

For applications in which fiberglass fans are handling gas fumes that are not only corrosive but also potentially explosive, the equipment should be specially constructed to control and remove static electricity. Interior airstream surfaces can be coated with a "carbon rich" resin coat and grounding straps secured from the side of the housing to the fan's steel base. All that remains to effectively ground the airstream is to ground the fan base at the time of installation.

ASTM D4167-97 Construction

(ASTM D4167-97, Standard Specification for Fiber-Reinforced Plastic Fans and Blowers) For corrosive systems where ASTM construction is specified this construction option adds: synthetic veil and electrostatically conductive surface coating applied to airstream housing and impeller surfaces, special nameplates, and special final dynamic balancing to fan.

CONTACT YOUR LOCAL HARTZELL REPRESENTATIVE FOR ASSISTANCE.

1-800-336-3267

Heavy-Duty Control Dampers

Inlet Control Damper

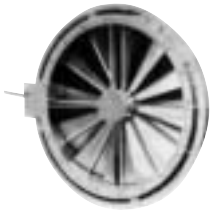

Dampers are mounted on the blower's drilled inlet flange to both increase the efficiency of the system and permit control of air volume. Dampers are epoxy coated or stainless steel construction.

Outlet Dampers

Dampers are mounted directly on the blower outlet to control the volume of air delivered to the system. Opposed and parallel blade dampers are available in steel, stainless steel, coated steel and solid fiberglass.

Parallel Blade Type

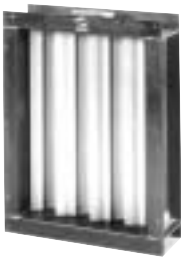

Best suited for applications requiring accurate air volume in a range from wide open to 75% of wide open. Usually used for balancing the system or for modulated control when pressure drop is variable.

Opposed Blade Type

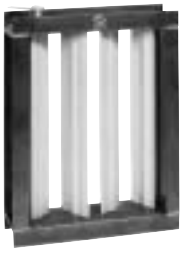

Best suited for control over a broad range of air volume with more precise control.

Both types of outlet control dampers are available in three classifications:

Class I – Maximum static pressure: 5" SP
Maximum velocity: 3900 FPM

Class II – Maximum static pressure: 8½" SP
Maximum velocity: 5100 FPM

Class III – Maximum static pressure: 20" SP
Maximum velocity: 6000 FPM

SAFETY ACCESSORIES, APPLICATION AND USE WARNING

The safe application and use of equipment supplied by Hartzell Fan, Inc. is the responsibility of the installer, the user, the owner, and the employer. Since the application and use of its equipment can vary greatly, Hartzell Fan, Inc. offers various product types, optional safety accessories, and sound performance data per laboratory tests. Hartzell Fan, Inc. sells its equipment with and without safety accessories, and accordingly, it can supply such safety accessories only upon receipt of an order. The need for safety accessories will frequently depend upon the type of system, fan location and operating procedures being employed. The proper protective safety accessories to meet company standards, local codes, and the requirements of the Occupational Safety and Health Act must be determined by the user since safety requirements vary depending on the location and use of the equipment. If applicable local conditions, standards, codes or OSHA rules require the addition of the safety accessories, the user should specify and obtain the required safety accessories from Hartzell Fan, Inc. and should not allow the operation of the equipment without them.

Owners, employers, users and installers should read "RECOMMENDED SAFETY PRACTICES FOR USERS AND INSTALLERS OF INDUSTRIAL AND COMMERCIAL FANS" published by the Air Movement Control Association International, Inc., 30 West University Drive, Arlington Heights, Illinois 60004. A copy of this publication is enclosed with each fan shipped from Hartzell Fan, Inc., and is available upon request at Hartzell's office in Piqua, Ohio 45356.

Please contact Hartzell Fan, Inc. or your local Hartzell representative for more information on product types, safety accessories, and sound performance estimates.

Remember, the selection of safety accessories and the safe application and use of equipment supplied by Hartzell Fan, Inc. is **your** responsibility.

Hartzell Warranty

LIMITED WARRANTIES

Hartzell represents to Buyer that any goods to be delivered hereunder will be produced in compliance with the requirements of the Fair Labor Standards Act of 1938 as amended.

Hartzell also warrants to Buyer its goods to be free from defects in workmanship and material under normal use and service for one (1) year after tender of delivery by Hartzell, plus six months allowance for shipment to approved stocking dealers and distributors. No warranty extends to future performance of goods and any claims for breach of warranty or otherwise accrues upon tender of delivery.

The foregoing constitute Hartzell's sole and exclusive warranties and are in lieu of all other warranties, whether written, oral, express, implied or statutory.

LIMITATION OF LIABILITY FOR BREACH OF WARRANTY

Hartzell's obligation for any breach of warranty is limited to repairing or replacing, at its option, without cost to Buyer at its factory any goods which shall, within such a warranty period, be returned to it with transportation charges prepaid, and which its examination shall disclose to its satisfaction to have been defective. Any request for repair or replacement should be directed to Hartzell Fan, Inc., P.O. Box 919, Piqua, Ohio 45356. Hartzell will not pay for any repairs made outside its factory without its prior written consent. This does not apply to any such Hartzell goods which have failed as a result of faulty installation or abuse, or incorrect electrical connections or alterations, made by others, or use under abnormal operating conditions or misapplication of the goods.

LIMITATION OF LIABILITY

To the extent the above limitation of liability for breach of warranty is not applicable, the liability of Hartzell on any claim of any kind, including negligence, for any loss or damage arising out of or connected with, or resulting from the sale and purchase of the goods or services covered by these Terms and Conditions of Sale or from the performance or breach of any contract pertaining to such sale or purchase or from the design manufacture, sale, delivery, resale, installation, technical direction installation, inspection repair, operation or use of any goods or services covered by these Terms and Conditions shall, in no case exceed the price allocable to the goods or services which gave rise to the claim and shall terminate one year after tender of delivery of said goods or services, plus six months allowance for shipment to approved stocking dealers and distributors.

In no event whether as a result of breach of contract, or warranty or alleged negligence, defects, incorrect advice or other causes, shall Hartzell be liable for special or consequential damages, including, but not limited to, loss of profits or revenue, loss of use of the equipment or any associated equipment, cost of substitute equipment, facilities or services, down time costs, or claims of customers of the Buyer for such damages. Hartzell neither assumes nor authorizes any person to assume for it any other liability in connection with the sale of its goods or services.

NO IMPLIED WARRANTIES OF MERCHANTABILITY OR FITNESS

HARTZELL DOES NOT WARRANT THAT SAID GOODS ARE OF MERCHANTABLE QUALITY OR THAT THEY ARE FIT FOR ANY PARTICULAR PURPOSE. THERE IS NO IMPLIED WARRANTY OF MERCHANTABILITY AND THERE IS NO IMPLIED WARRANTY OF FITNESS.

Propeller Fans

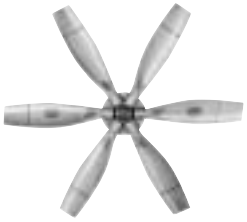

Cooling Tower & Heat Exchanger Fans

Duct Fans

Duct Axial Fans

Vaneaxial Blowers

Cool Blast & Utility Fans

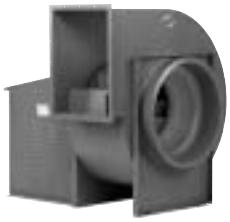

Steel Centrifugal Blowers

Roof Ventilators – Steel & Fiberglass

Heating Equipment – Gas & Steam

Fiberglass Axial Flow Fans

Fiberglass Centrifugal Blowers

Marine – Mine Duty Blowers

REV	DATE	DESCRIPTION	DRAWN BY	CHECKED BY	APPROVED BY
1	11/23/05	ISSUED FOR APPROVAL	DM	JPM	
2	2/15/06	REPLACED 5600-245 & 36C-300-09 WITH 5600-758 & 5600-759	JB	JPM	
3	3/17/06	REMOVED 5600-759 & REPLACED 5600-758 WITH - 5600-908	JB		
4	6/05/06	ADDED FLANGE GASKET & FASTENERS TO ASSEMBLY	CAM	JP	

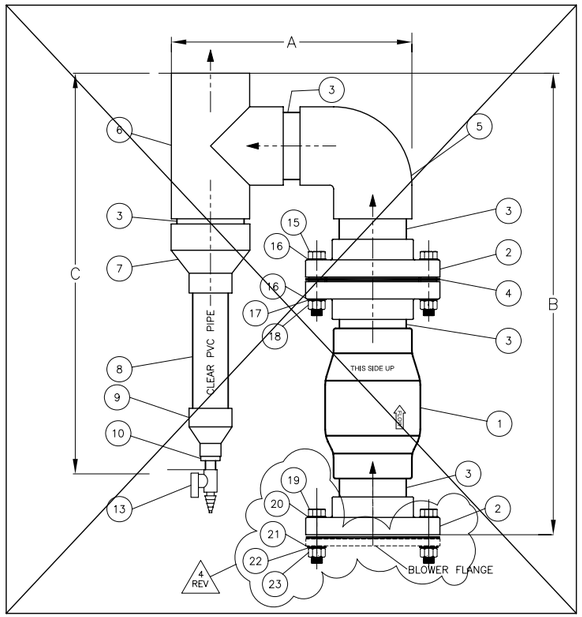

AIR CHECK VALVE SPOOL & CONDENSATE DRIP LEG ASSEMBLY (2" ONLY)
NOT TO SCALE

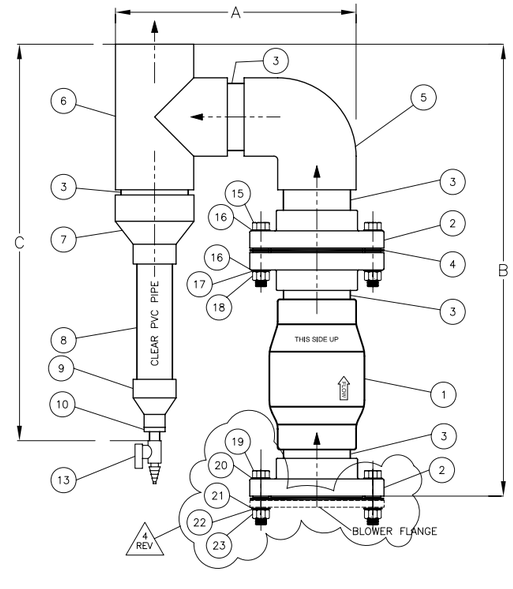

AIR CHECK VALVE SPOOL & CONDENSATE DRIP LEG ASSEMBLY (3" & 4")
NOT TO SCALE

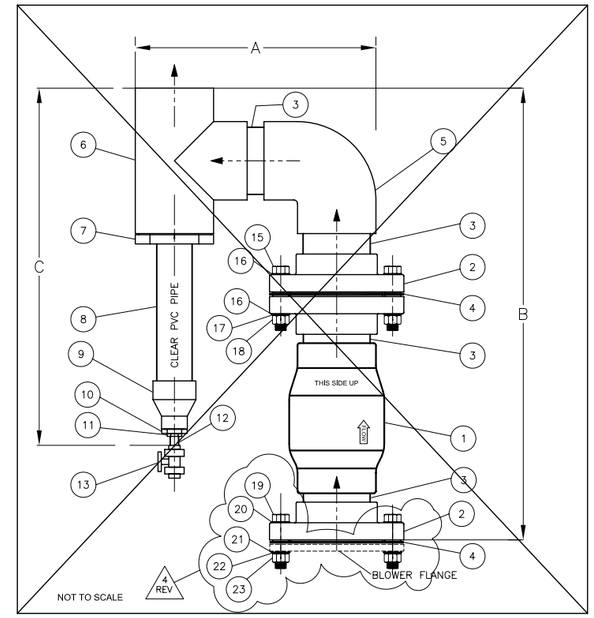

AIR CHECK VALVE SPOOL & CONDENSATE DRIP LEG ASSEMBLY (6"& 8")

LIST OF MATERIALS

ITEM	DESCRIPTION	ASSEMBLY PART NUMBERS									
		1000-ACVS-CD-2		1000-ACVS-CD-3		1000-ACVS-CD-4		1000-ACVS-CD-6		1000-ACVS-CD-8	
		QTY.	PART #	QTY.	PART #	QTY.	PART #	QTY.	PART #	QTY.	PART #
1	VALVE, SWING CHECK, SOCKET END, CLEAR PVC	1-EA.	5500-607	1-EA	5500-608	1-EA	5500-609	1-EA	5500-610	1-EA	5500-611
2	FLANGE, SOCKET, PVC, SCH 80 (FLEXIBLE COUPLING W/ CLAMPS FOR 2" ONLY)	1-EA.	5600-908	3-EA.	8800-003	3-EA.	8800-002	3-EA.	8800-012	3-EA.	8800-015
3	PIPE, PVC SCH. 80	2.5 LF	6400-058	3.0 LF	5900-297	3.5 LF	6400-065	4.0 LF	6400-057	5.0 LF	5500-857
4	GASKET, FLANGE	2-EA.	5800-155	2-EA.	5800-154	2-EA.	5500-780	2-EA.	5500-779	2-EA.	5500-905
5	ELBOW, PVC, SCH 80	1-EA.	5904-018	1-EA.	5900-195	1-EA.	5500-123	1-EA.	5500-109	1-EA.	5500-756
6	TEE, SxSxS, PVC, SCH 80	1-EA.	5900-112	1-EA.	5900-182	1-EA.	5901-081	1-EA.	5500-110	1-EA.	5500-758
7	COUPLING, REDUCER, PVC, SCH 80 (BUSHING REDUCER FOR 6 & 8")	1-EA.	5800-135	1-EA.	5800-134	1-EA.	5500-938	1-EA.	5500-112	1-EA.	5500-757
8	PIPE, CLEAR, PVC	1.5 LF	6400-061	1.5 LF	6400-062	1.5 LF	6400-062	1.5 LF	5600-170	1.5 LF	6400-461
9	COUPLING, REDUCER, PVC, SCH 80	1-EA.	5800-093	1-EA.	5500-939	1-EA.	5500-939	1-EA.	5500-938	1-EA.	5800-072
10	BUSHING, REDUCER, PVC, SCH 80	1-EA.	5800-012A	1-EA.	5800-012A	1-EA.	5800-012A	–	–	1-EA.	5901-082
11	BUSHING REDUCER, 2" Spig x 1" Soc, PVC, SCH 80	–	–	–	–	–	–	1-EA.	5901-019	1-EA.	5901-019
12	PIPE, 1", PVC SCH 80	–	–	–	–	–	–	0.25 LF	5800-099	0.25 LF	5800-099
13	VALVE, BALL, PVC	1-EA.	5800-000	1-EA.	5800-000	1-EA.	5800-000	1-EA.	5800-343	1-EA.	5800-343
14		1-EA.		–	–	–	–	–	–	–	–
15	SCREW, HEX HEAD CAP, 18-8, SS	4-EA.	5903-055	4-EA.	5600-265	8-EA.	5800-188	8-EA.	5600-261	8-EA.	5600-262
16	WASHER, FLAT, 18-8, SS	8-EA.	5903-057	8-EA.	5903-057	16-EA.	5903-057	16-EA.	5600-266	16-EA.	5600-266
17	WASHER, LOCK, 18-8, SS	4-EA.	5800-186	4-EA.	5800-186	8-EA.	5800-186	8-EA.	5600-263	8-EA.	5600-263
18	NUT, HEX 18-8, SS	4-EA.	5903-056	4-EA.	5903-056	8-EA.	5903-056	8-EA.	5903-039	8-EA.	5903-039
19	SCREW, HEX HEAD CAP, 18-8, SS	4-EA.	5903-063	4-EA.	5903-063	8-EA.	5903-063	8-EA.	5903-063	8-EA.	5903-063
20	WASHER, FENDER, 18-8, SS	4-EA.	2800-113	4-EA.	2800-113	8-EA.	2800-113	8-EA.	2800-113	8-EA.	2800-113
21	WASHER, LOCK, 18-8, SS	4-EA.	2800-112	4-EA.	2800-112	8-EA.	2800-112	8-EA.	2800-112	8-EA.	2800-112
22	WASHER, FLAT 18-8, SS	4-EA.	5903-003	4-EA.	5903-003	8-EA.	5903-003	8-EA.	5903-003	8-EA.	5903-003
23	NUT, HEX 18-8, SS	4-EA.	5903-002	4-EA.	5903-002	8-EA.	5903-002	8-EA.	5903-002	8-EA.	5903-002

4 REV

ASSEMBLY PART NUMBER LEGEND: 1000-ACVS-CD-X
NOMINAL PIPE DIAMETER (IN)

DIMENSIONS

ITEM	NOMINAL PIPE DIAMETER (IN.)				
	2	3	4	6	8
A	12.0	18.0	24.0	26.0	33.0
B	24.0	31.0	33.0	34.0	41.0
C	26.0	30.0	32.0	35.0	42.0

NOTES:

1. THE AIR CHECK VALVES NEED TO BE INSTALLED IN THE VERTICAL POSITION.

SEVERN TRENT SERVICES
CLORTEC
2660 COLUMBIA STREET TORRANCE, CA 90503
TELEPHONE No: (310)-618-9700 E-MAIL:
FAX No: (310)-618-1384 WEB SITE: www.severntrentservices.com

UNLESS OTHERWISE NOTED
TOLERANCES:

TYPE:	INCHES	[MM]
FRACTIONS	± 1/8"	
.X	± .1"	± 2.5
.XX	± .02"	± .51
.XXX	± .005"	± .127
ANGLES	± 1°	

NOTICE OF CONFIDENTIALITY
THIS DOCUMENT CONTAINS PROPRIETARY INFORMATION THAT IS AND SHALL REMAIN THE PROPERTY OF CLORTEC AND IS TO BE RETURNED IMMEDIATELY UPON REQUEST. ITS CONTENTS MAY NOT BE REPRODUCED, DISTRIBUTED, CIRCULATED, OR DISCLOSED TO THIRD PARTIES. RECIPIENT WILL NOT USE THIS INFORMATION FOR PURPOSES OTHER THAN INTENDED WITHOUT PRIOR WRITTEN CONSENT OF CLORTEC.

ASSEMBLY
AIR CHECK VALVE SPOOL
& CONDENSATE DRIP LEG

SCALE:	CLORTEC JOB No:	SIZE:	REV:
N.T.S.	STANDARD	B	4

DWG No: 1000-ACVS-CD-4
SHEET: 1 OF 1

Hartzell Fan, Inc.®

ESP - Version 1.16.142 - June, 2006

Print Date: 7/25/2006

A42-0-12--F100FGFCJK

Discharge Sound Pressure = 91 dBA @ 5.0 ft

Radiated Sound Pressure = 81 dBA @ 5.0 ft

Discharge Sound Power = 103 LwA

Radiated Sound Power = 93 LwA

VFR: 300. cfm

SP: 10. in wg

Fan RPM: 3468

The A-weighted sound pressure level (dBA) is based on Hartzell Laboratory sound power tests, and is calculated in accordance with AMCA standard 301.

The dBA, LwA and radiated values are not AMCA International Licensed
The calculation assumes a free field condition with a directivity factor for hemi-spherical radiation (Q = 2).

The installed sound pressure levels are influenced by the installation and acoustic environment, and cannot be guaranteed. Use of this estimated level alone for field acceptability tests is not recommended.

Although the calculation can be done for any stated distance, the free field does not start until 20 to 50 feet from the equipment in most installations.

Contact Hartzell Fan for more information concerning dBA values.

Hartzell Fan, Inc.®

ESP - Version 1.16.142 - June, 2006

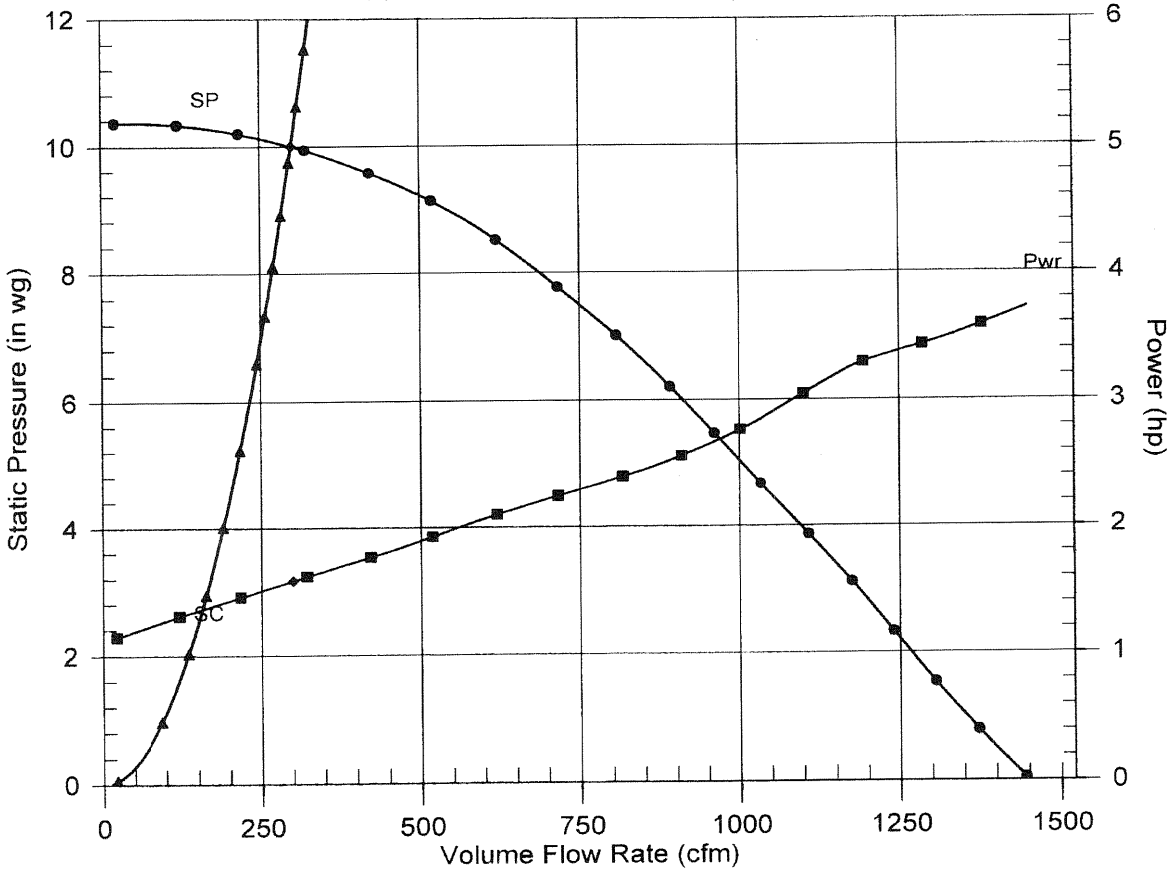

Date:	7/25/2006
Job Ref:	
Tag #:	
Proposal #:	
Rep. Name:	Hartzell Fan, Inc.
Phone #:	1-800-336-3267
Fax #:	1-937-773-8994

Fan Selected:

A42-0-12--F100FGFCJK

42 - Fiberglass Pressure Blower

Vol Flow Rate	300.
Static Pressure	10.
Density	.075
Operating Temp	70 F
Fan RPM	3468
Max Safe RPM	4167
Operating Power	1.583
Standard Power	1.583
Static Efficiency	0.298
Outlet Velocity	1920

Power [BHP] excludes drives

Discharge Sound Power Levels
referred to 10^-12 watts

1	2	3	4	5	6	7	8
110	109	105	102	94	87	83	84

Radiated Sound Power Levels
referred to 10^-12 watts

1	2	3	4	5	6	7	8
106	102	95	91	82	74	70	71

Hartzell Fan, Inc. certifies that the model shown is licensed to bear the AMCA Seal.
The ratings shown are based on tests and procedures performed in accordance with AMCA Publication 211 and comply with the requirements of the AMCA Certified Ratings Program.
The AMCA Certified Ratings Seal applies to air performance ratings only.

Performance shown is for Installation Type D: Ducted Inlet, Ducted Outlet.
Power [BHP] excludes drives.
Performance Ratings do not include the effects of appurtenances in the airstream.
Sound ratings are based on sound power level data obtained in accordance with AMCA Standard 300.
The sound power level ratings shown are in decibels, referred to 10^-12 watts, calculated per AMCA Standard 301.
Fan Outlet Sound Testing. Values shown are for outlet Lwo sound power levels for: Installation Type D: ducted inlet, ducted outlet.
Ratings include the effects of duct end correction.

See page 2 for sound information, including dBA and LwA.

127
Aug.02, 2006

BALDOR

Product Quick Search
M3555T-5 Go

AC Motors | General Purpose |

Specifications: M3555T-5

Catalog Number:	M3555T-5
Specification Number:	35T638T079H1
Horsepower:	2
Voltage:	575
Hertz:	60
Phase:	3
Full Load Amps:	2.1
Usable at 208 Volts:	N/A
RPM:	3450
Frame Size:	145T
Service Factor:	1.15
Rating:	40C AMB-CONT
Locked Rotor Code:	L
NEMA Design Code:	B
Insulation Class:	B
Full Load Efficiency:	84
Power Factor:	88
Enclosure:	TEFC
Baldor Type:	3526M
DE Bearing:	6205
ODE Bearing:	6203
Electrical Specification Number:	35WGT079
Mechanical Specification Number:	35T638
Base:	RG
Mounting:	F1

* For certified information, contact your local Baldor office.

BALDOR

Product Quick Search
M3555T-5 Go

AC Motors | General Purpose |

Performance Data: M3555T-5

Create PDF (Note: Please disable any browser popup blockers.)

Rated Output	2 HP	Hertz	60	NEMA Nom. Eff.	84
Volts	575	Phase	3	Power Factor	88
Full Load Amps	2.1	NEMA Design Code	B	Service Factor	1.15
Speed	3450	LR KVA Code	L	Rating - Duty	40C AMI

(Typical performance - Not guaranteed values)

Full Load Torque	3 LB-FT	Starting Current	19.5 Am
Start Configuration	DOL	No-Load Current	0.9 Amp
Break Down Torque	12.4 LB-FT	Line-line Resistance @ 25° C	12.4 Oh
Pull-Up Torque	7.6 LB-FT	Temperature Rise, C @ FL (in deg)	47
Locked-Roter Torque	11 LB-FT	Temp. Rise @ S.F. Load (in deg)	55

% of Rated Load	25	50	75	100	125	150
Power Factor	50	73	80	85	89	89
Efficiency	72.7	81.2	83.8	84.2	83.7	82.6
Speed (rpm)	3563	3537	3507	3475	3440	3402
Line Amperes	1	1.3	1.7	2.1	2.5	3

* For certified information, contact your local Baldor office.

35LYT638

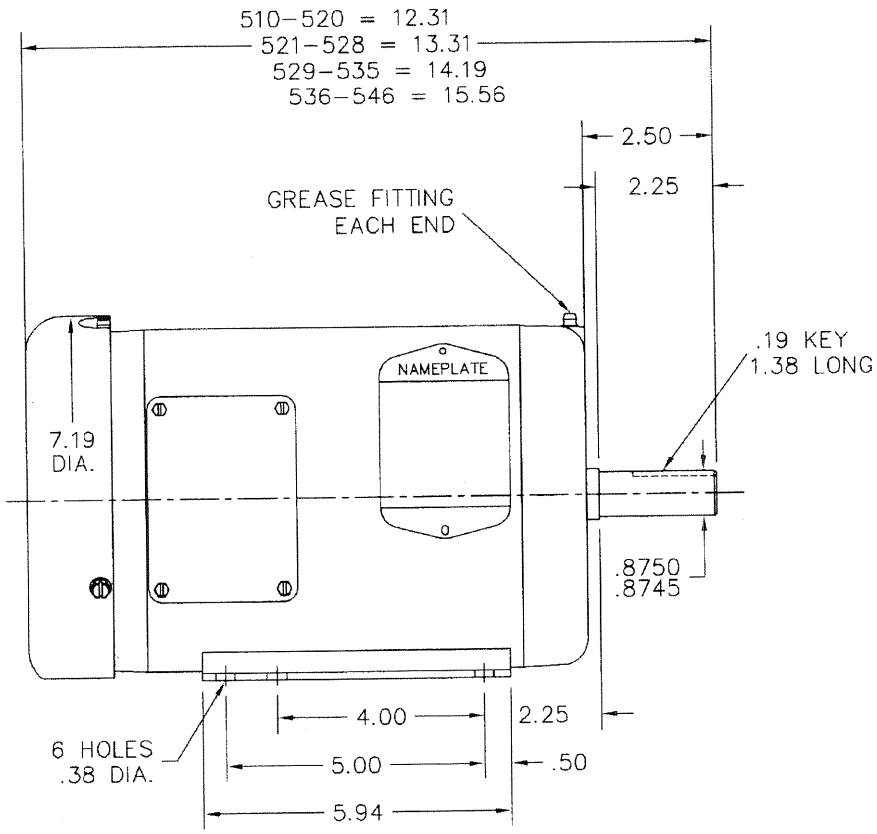

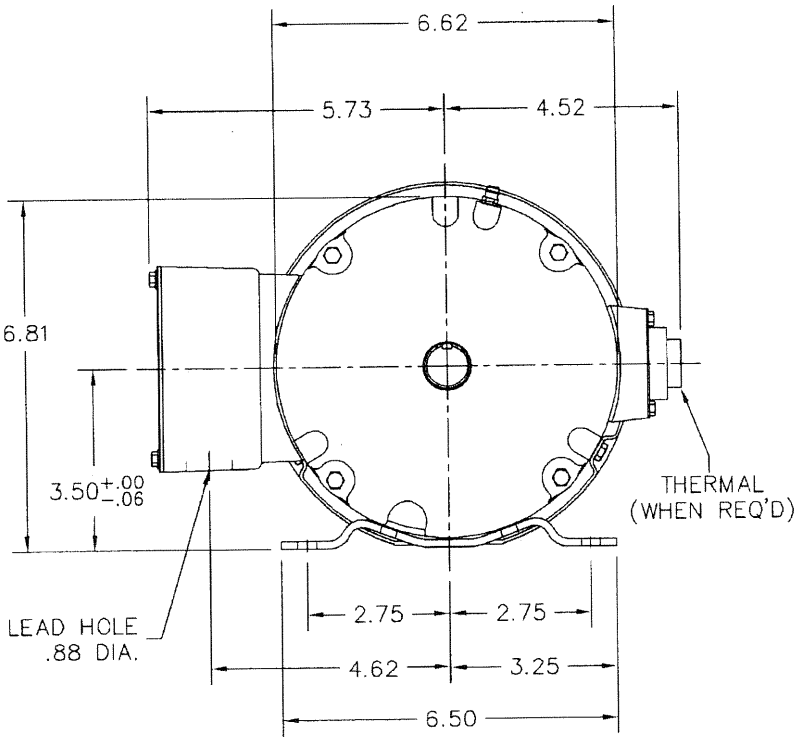

CUSTOMER IS RESPONSIBLE FOR DETERMINING THAT MOTOR PERFORMANCE IS SUITABLE IN THE APPLICATION.

REV. DESC: ADDED "2 POLE" TO THE DESC			
REV. LTR: B	BY: SSS	REVISED: 10:12:00 10/20/2003	TDR: 315081
35LYT638		FILE: AAA00106650	REF: 35LYT638
		MTL: –	

BALDOR ELECTRIC Co.

HOR 143–5T TEFC 35M 2 POLE "W" BASE (35BA4009)

35LYT638

CD0006

TYPICAL WYE-CONNECTED MOTOR

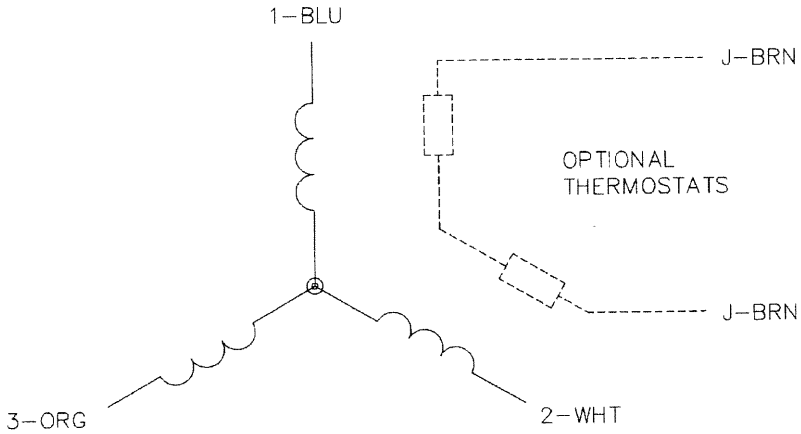

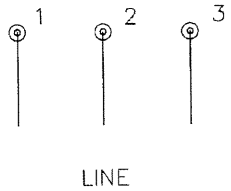

TYPICAL DELTA-CONNECTED MOTOR

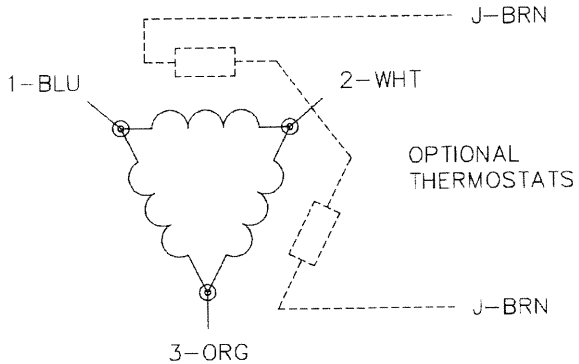

NOTES:

1. THREE LEAD MOTOR MAY BE EITHER WYE CONNECTED OR DELTA CONNECTED.
2. INTERCHANGE ANY TWO LINE LEADS TO REVERSE ROTATION.
3. OPTIONAL THERMOSTATS ARE PROVIDED WHEN SPECIFIED.
4. ACTUAL NUMBER OF INTERNAL PARALLEL CIRCUITS MAY VARY.
5. LEAD COLORS ARE OPTIONAL. LEADS MUST BE NUMBERED AS SHOWN.

CD0006

REV. DESC: REVISE TO SHOW OPTIONAL COLORS			
REV. LTR: D	BY: JLP	REVISED: 01/21/99 4:02	TDR: 0171435
CD0006		FILE: AAA00005141	MDL: –
		MTL: –	

BALDOR ELECTRIC Co.

3PH, SV, 3 LEADS, WYE OR DELTA CONNECTED

CD0006

REV	DATE	DESCRIPTION	DRAWN BY	CHECKED BY	APPROVED BY
0	08/01/06	ISSUED FOR APPROVAL	CAM	JPM	

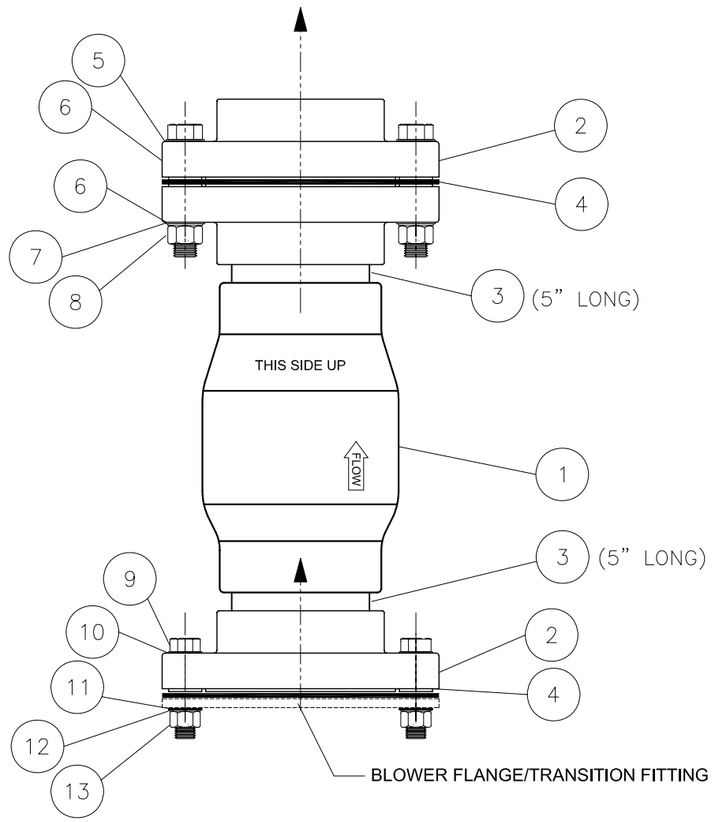

BILL OF MATERIALS

ITEM	QTY	DESCRIPTION	MFG/VENDOR	MFG/VENDOR PART#	CLORTEC PART#
1	1	VALVE, SWING CHECK, 4", SOCKET END, PVC	SPEARS	S1520C40	5500-609
2	3	FLANGE, 4", TWO-PIECE, SOCKET, PVC	SPEARS	854-064	8800-002
3	0.83	PIPE, 4", PVC SCH. 80	RYAN HERCO	800-040	6400-065
4	2	GASKET, FULL FACE, EPDM, 1/8"x 4"ø	CAL-PICO	EPDM-064	5500-780
5	8	SCREW, HEX HEAD,18-8 SS	STA FE		5800-188
6	16	WASHER FLAT, 18-8, SS	STA FE	–	5903-057
7	8	WASHER, LOCK, 18-8 SS	STA FE	–	5800-186
8	8	NUT, HEXAGON,18-8 SS	OLANDERS	75CHNTS	5903-056
9	8	SCREW, HEX HEAD,18-8 SS	STA FE		5903-063
10	8	WASHER, FENDER, 18-8, SS	STA FE	–	2800-113
11	8	WASHER, LOCK, 18-8 SS	STA FE	–	2800-112
12	8	WASHER, FLAT,18-8 SS	OLANDERS	37N100FLWS	5903-003
13	8	NUT, HEXAGON,18-8 SS	OLANDERS	37CHNTS	5903-002

NOTES:

1. THE AIR CHECK VALVES NEED TO BE INSTALLED IN THE VERTICAL POSITION.

AIR CHECK VALVE SPOOL ASSEMBLY- 4" Ø
(FOR BLOWER DISCHARGE)

SEVERN TRENT SERVICES
CLORTEC
2660 COLUMBIA STREET TORRANCE, CA 90503
TELEPHONE No: (310)-618-9700 E-MAIL:
FAX No: (310)-618-1384 WEB SITE: www.severntrentservices.com

UNLESS OTHERWISE NOTED
TOLERANCES:

TYPE:	INCHES	[MM]
FRACTIONS	± 1/8"	
.X	± .1"	± 2.5
.XX	± .02"	± .51
.XXX	± .005"	± .127
ANGLES	± 1°	

NOTICE OF CONFIDENTIALITY
THIS DOCUMENT CONTAINS PROPRIETARY INFORMATION THAT IS AND SHALL REMAIN THE PROPERTY OF CLORTEC AND IS TO BE RETURNED IMMEDIATELY UPON REQUEST. ITS CONTENTS MAY NOT BE REPRODUCED, DISTRIBUTED, CIRCULATED, OR DISCLOSED TO THIRD PARTIES. RECIPIENT WILL NOT USE THIS INFORMATION FOR PURPOSES OTHER THAN INTENDED WITHOUT PRIOR WRITTEN CONSENT OF CLORTEC.

ASSEMBLY
AIR CHECK VALVE SPOOL
4"
FOR BLOWER DISCHARGE

SCALE:	CLORTEC JOB No:	SIZE:	REV:
NTS	STANDARD	B	0
DWG No: 1000-ACVS-4		SHEET: 1 OF 1	

NEW PRODUCTS

V-1K-0604
Effective August 15, 2002

PVC Utility Swing Check Valves

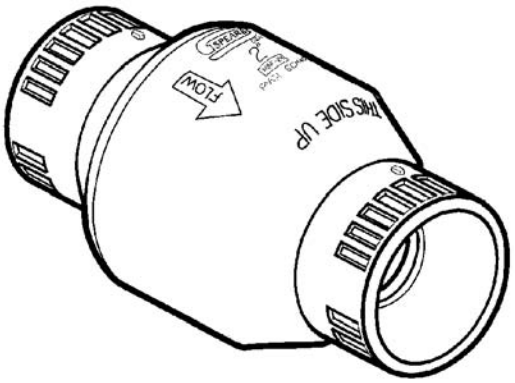

- Engineered for Maximum Flow, Quick Response & Positive Shutoff
- Excellent for Pool & Spa, OEM and General Purpose Applications
- Compact, Space-Saving Design
- PVC White or Clear Sealed Unit
- All Plastic Construction – No Metal Parts
- Angled Seat and Weighted Flapper for Low-Pressure Seal
- High Grade EPDM Seat
- Suitable for Horizontal or Vertical Up-flow Installations
- Socket or Threaded End Connections
- Pressure Rated to 150 psi @ 73°F Full Flow (open), 75 psi Back Pressure (closed)
- Maximum Service Temperature 140°F (temperature/pressure de-ratings apply)

PVC White

Size	Socket	Thread	SR Thread	Std Pk	Mstr Ctn	Disc Code
1/2	S1520-05	S1520-05F	S1520-05FSR	35	0	026
	10.24	**10.24**	**11.94**			
3/4	S1520-07	S1520-07F	S1520-07FSR	35	0	026
	10.56	**10.56**	**13.00**			
1	S1520-10	S1520-10F	S1520-10FSR	20	0	026
	11.00	**11.00**	**14.38**			
1-1/4	S1520-12	S1520-12F	S1520-12FSR	12	0	026
	11.44	**11.44**	**16.86**			
1-1/2	S1520-15	S1520-15F	S1520-15FSR	12	0	026
	12.10	**12.10**	**21.38**			
2	S1520-20	S1520-20F	S1520-20FSR	15	0	026
	18.81	**18.81**	**28.87**			
2-1/2	S1520-25	S1520-25F	S1520-25FSR	5	0	026
	31.28	**31.28**	**41.34**			
3	S1520-30	S1520-30F	S1520-30FSR	4	0	026
	34.76	**34.76**	**61.66**			
4	S1520-40	S1520-40F	S1520-40FSR	2	0	026
	49.23	**49.23**	**77.09**			
6	S1520-60	S1520-60F	S1520-60FSR	1	0	026
	103.43	**103.43**	**136.43**			
8	S1520-80	---	---	1	0	026
	192.15					

PVC Clear

Size	Socket	Thread	SR Thread	Std Pk	Mstr Ctn	Disc Code
1/2	S1520C05	S1520C05F	S1520C05FSR	35	0	026
	13.92	**13.92**	**15.62**			
3/4	S1520C07	S1520C07F	S1520C07FSR	35	0	026
	14.19	**14.19**	**16.63**			
1	S1520C10	S1520C10F	S1520C10FSR	20	0	026
	14.47	**14.47**	**17.85**			
1-1/4	S1520C12	S1520C12F	S1520C12FSR	12	0	026
	15.18	**15.18**	**20.60**			
1-1/2	S1520C15	S1520C15F	S1520C15FSR	12	0	026
	16.50	**16.50**	**25.78**			
2	S1520C20	S1520C20F	S1520C20FSR	15	0	026
	23.76	**23.76**	**33.82**			
2-1/2	S1520C25	S1520C25F	S1520C25FSR	5	0	026
	39.60	**39.60**	**55.20**			
3	S1520C30	S1520C30F	S1520C30FSR	4	0	026
	44.00	**44.00**	**70.90**			
4	S1520C40	S1520C40F	S1520C40FSR	2	0	026
	59.24	**59.24**	**87.10**			
6	S1520C60	S1520C60F	S1520C60FSR	1	0	026
	122.44	**122.44**	**155.44**			
8	S1520C80	---	---	1	0	026
	204.52					

Technical Information

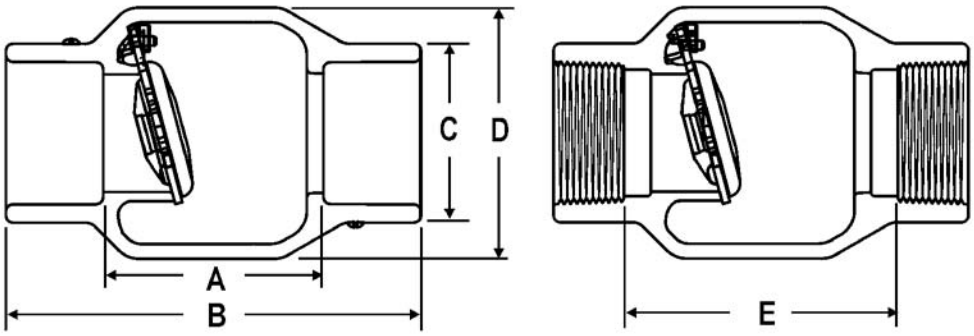

Dimensions

Nominal Size	Dimension Reference (inches, ± 1/16)				
	A	B	C	D	E
1/2	2-9/16	4-1/16	1-3/8	2-1/8	2-5/8
3/4	1-3/4	3-9/16	1-3/8	2-1/8	2-1/16
1	2-5/16	4-9/16	1-11/16	2-5/8	2-15/16
1-1/4	2-15/16	5-1/2	2-1/16	3-3/8	3-5/8
1-1/2	3	5-5/8	2-7/16	3-3/8	3-11/16
2	3-5/8	6-3/8	3	4-1/4	4-3/8
2-1/2	4-3/8	7-7/8	3-9/16	5-1/8	5-1/4
3	4-11/16	8-7/16	4-5/16	5-3/4	5-5/8
4	6	10-1/16	5-1/4	6-3/8	7-1/16
6	8-1/2	14-9/16	7-11/16	9-1/4	11-5/16
8	11-3/16	19-1/4	9-7/16	11-15/16	N/A

General Installation Information: Swing check valves are designed for horizontal installations, but may be installed in up-flow only vertical position. Check valves MUST be installed with the valves FLOW arrow pointing in the direction of the flow. Do not install valve upside down. Flow velocity should not exceed 5 ft./sec.

See Spears® Thermoplastic Valves, Strainers & Accessories Price Schedule V-1 for additional sizes and valve accessories.

Not for Use With Compressed Air or Gas

Prices subject to change without notice. Possession of this price schedule shall not be construed as an offer to sell the products listed. Product drawings are representative and may not fully reflect product configuration.

Progressive Products From Spears® Innovation & Technology

SPEARS® MANUFACTURING COMPANY • CORPORATE OFFICE
15853 Olden St., Sylmar, CA 91342 • PO Box 9203, Sylmar, CA 91392
(818) 364-1611 • www.spearsmfg.com

PACIFIC SOUTHWEST
15860 Olden St.
Sylmar (Los Angeles), CA 91342
(818) 364-1611 • (800) 862-1499
Fax (818) 367-3014

ROCKY MOUNTAIN
4880 Florence St.
Denver, CO 80238
(303) 371-9430 • (800) 777-4154
Fax (303) 375-9546

UTAH
1641 South 700 West
Salt Lake City, UT 84104
(801) 972-0659
Fax (801) 972-0688

SOUTHEAST
4205 Newpoint Pl. Suite 100
Lawrenceville (Atlanta), GA 30043
(678) 985-1263 • (800) 662-6326
Fax (678) 985-5642

MIDWEST
1 Gateway Ct . Suite A
Bolingbrook (Chicago), IL 60440
(630) 759-7529 • (800) 662-6330
Fax (630) 759-7515

NORTHWEST
4103 C St. NE Suite 200
Auburn (Seattle), WA 98002
(253) 939-4433 • (800) 347-7327
Fax (253) 939-7557

SOUTH CENTRAL
4250 Patriot Dr. Suite 300
Grapevine (Dallas), TX 76051-2317
(972) 691-4003 • (800) 441-1437
Fax (972) 691-4404

NORTHEAST
590 Industrial Dr. Suite 100
Lewisberry (Harrisburg), PA 17339-9532
(717) 938-8844 • (800) 233-0275
Fax (717) 938-6547

FLORIDA
3445 Bartlett Blvd.
Orlando, FL 32811
(407) 843-1960 • (800) 327-6390
Fax (407) 425-3563

INTERNATIONAL SALES
15853 Olden St.
Sylmar (Los Angeles), CA 91342
(818) 364-1611 • Fax (818) 898-3774
E-mail: export@spearsmfg.com

© Copyright 2004 Spears® Manufacturing Company. All Rights Reserved. Printed in the United States of America 09/04.

REV	DATE	DESCRIPTION	DRAWN BY	CHECKED BY	APPROVED BY
0	7/31/06	ISSUE FOR APPROVAL	JB		

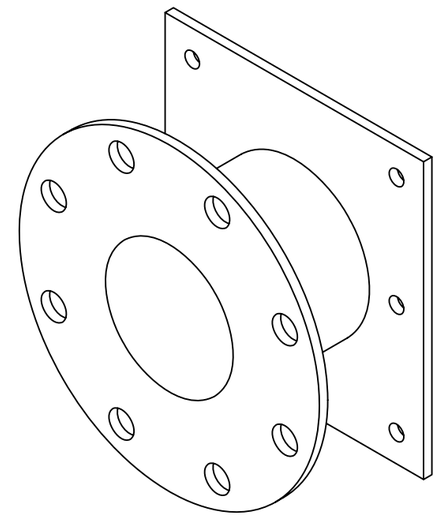

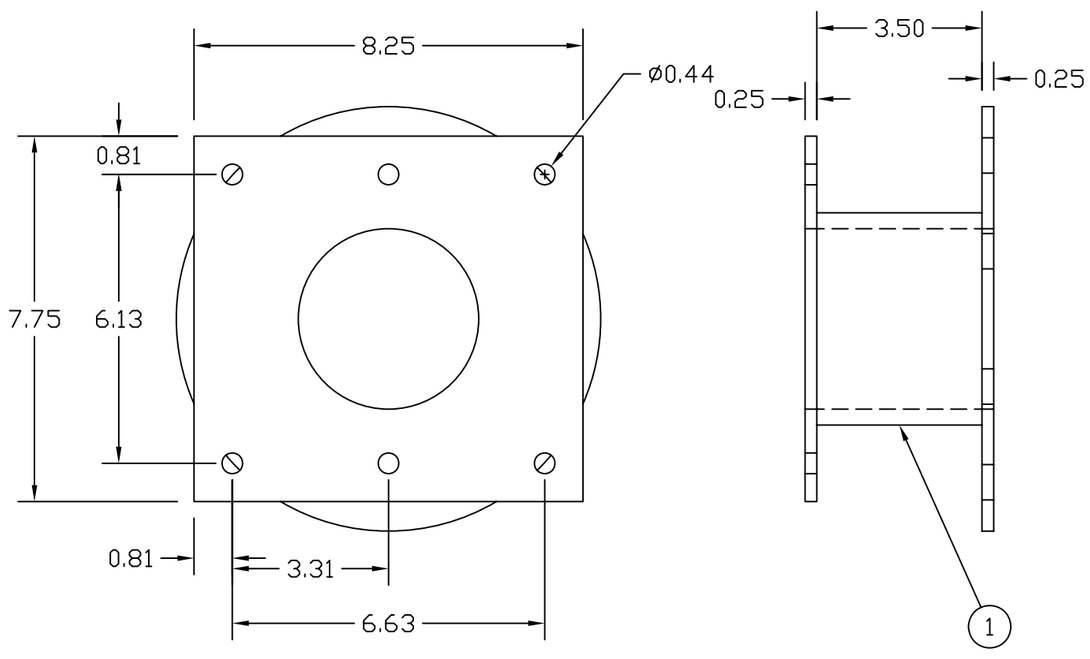

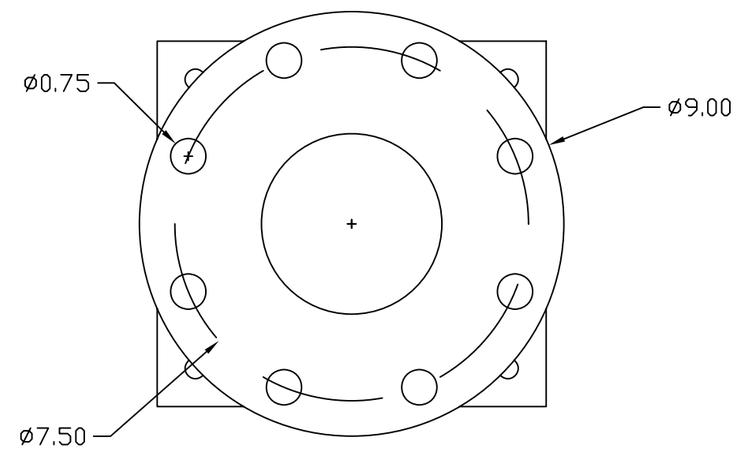

BILL OF MATERIALS			
ITEM	QTY	DESCRIPTION	PART NUMBER
1	1	FITTINGS, FLANGE, 12" STAINLESS STEEL	5601-330
2	3.5	PIPE, 6 INCH, 304 SS, SCH 40	P40A60020

NOTES: UNLESS OTHERWISE SPECIFIED:

1. MATERIAL: STAINLESS STEEL

SEVERN TRENT SERVICES
CLORTEC
2660 COLUMBIA STREET TORRANCE, CA 90503
TELEPHONE No: (310)-618-9700 E-MAIL:
FAX No: (310)-618-1384 WEB SITE: www.severntrentservices.com

UNLESS OTHERWISE NOTED
TOLERANCES:

TYPE:	INCHES	[MM]
FRACTIONS	± 1/8"	
.X	± .1"	± 2.5
.XX	± .02"	± .51
.XXX	± .005"	± .127
ANGLES	± 1°	

NOTICE OF CONFIDENTIALITY
THIS DOCUMENT CONTAINS PROPRIETARY INFORMATION THAT IS AND SHALL REMAIN THE PROPERTY OF CLORTEC AND IS TO BE RETURNED IMMEDIATELY UPON REQUEST. ITS CONTENTS MAY NOT BE REPRODUCED, DISTRIBUTED, CIRCULATED, OR DISCLOSED TO THIRD PARTIES. RECIPIENT WILL NOT USE THIS INFORMATION FOR PURPOSES OTHER THAN INTENDED WITHOUT PRIOR WRITTEN CONSENT OF CLORTEC.

ADAPTOR, BLOWER
(HARTZELL FAN),
4" FLANGE TO A42 FLANGE

SCALE:	CLORTEC JOB No:	SIZE:	REV:
1"=0'-11"	STANDARD	B	0
DWG No: 5601-337		SHEET: 1 OF 1	

SEVERN TRENT SERVICES

NOTE- H_2 GAS FLOW RATE PROVIDED BY EQUIPMENT SUPPLIER

PAGES 136-144 (COPIES ATTACHED) HAVE BEEN CHECKED AS NOTED AND APPROVED.

APEGM Certificate of Authorization D. Oleksiuk & Associates Inc. No. 808 Expiry: April 30, 2007

PROVINCE OF MANITOBA D. OLEKSIUK Member 2905 REGISTERED PROFESSIONAL ENGINEER

Project No. : CPG 0465
Project Name : City of Winnipeg
Water Treatment Plant

Dilution System Calculations:

Reference Specifications: 11242, Clause 2.12

System: 3x CT – 1500 Lbs/Day (680 Kgs/Day) ✓
Total System Capacity: 4500 Lbs/Day (2040 Kgs/Day) ✓
Total Hydrogen Produced: 26.55 CFM

Dilution Air needed to reduce the concentration of Hydrogen Gas At the Stand Pipe below 1% in air (v/v) which is equivalent to 25% ✓ of Hydrogen's Low Explosive limit (LEL=4% v/v) is as follows:

26.55 CFM x 100 = 2655 CFM ✓

We selected Blowers w/ a Capacity of 2700 cfm. (1-Duty /1-Stand By) at the stand pipe to dilute the total amount of Hydrogen (Refer to P&ID and Equipment Layout drawing). For high capacity blowers such as this case, it is recommended to dilute the hydrogen at a Stand pipe instead of the Tanks. This is to help prevent pressurizing the Tank, by large volume of air and also to help reduce the size of Vent pipe on the Tanks.

Since some of the Hydrogen gas are trapped in the Hypochlorite solution as it flows to the Tanks, small capacity blowers are needed to provide air to dilution to 10% remaining Hydrogen gas. Dilution air requirement calculation is as follows.

2655 CFM x 10% = 265.5 CFM. ✓

We selected eight (8) blowers with a capacity of 300 CFM. (4-Duty/4-Stand-By) for the Four (4) Hypo Tanks.

Other factors that affects the Blower selection is the Blower static pressure. To determine the static pressure, we need to calculate the pressure losses on the air venting piping from the blowers to the discharge vent to atmosphere. Attached herewith is the calculation of the Static pressure drop for both 2700 cfm and 300 cfm blower.

Knowing the air flow requirement and the static pressure requirement, a blower is selected and the motor Horsepower and wheel size is determined.

SEVERN TRENT SERVICES

PROJECT: CITY OF WINNIPEG

SUBJECT: CALCULATIONS OF TOTAL PRESSURE LOSS ON 4" Ø VENT PIPE FOR HYPO STORAGE TANK DILUTION SYSTEM W/ 300 CFM AIR FLOW RATE

TOTAL PRESSURE LOSS = $P_{L1} + P_{L2} + P_{L3} + P_{L4}$

WHERE:

P_{L1} = PRESSURE LOSS FROM BLOWER TO STORAGE TANK EXCLUDING SWING CHECK VALVE (REFER TO VALUE ON PG A-1)

P_{L2} = PRESSURE LOSS FROM STORAGE TANK AIR OUTLET TO VENT OUTLET (REFER TO VALUE ON PG A-2)

P_{L3} = PRESSURE LOSS FROM 4" SWING CHECK VALVE (REFER TO VALUE ON PG A-3

P_{L4} = PRESSURE LOSS AT TRANSITION FITTING FROM BLOWER TO CHECK VALVE.

$P_{L4} = VP_1 + E_L$ WHERE:

VP_1 — ACCELERATION LOSS

E_L — ENTRY LOSS

$VP_1 = \left(\frac{V}{4005}\right)^2$ $V = \frac{Q}{A}$

$Q = 300$ CFM

A = BLOWER OUTLET AREA $= 4\frac{3}{4}'' \times 5'' = 0.165$ FT

$V = \frac{300}{0.165} = 1818$ FPM

$VP_1 = \left(\frac{1818}{4005}\right)^2 = 0.20$ in wg.

$E_L = 0.9\left(\frac{V}{4005}\right)^2 = 0.185$ in wg

$P_{L4} = 0.20 + 0.185 = 0.385$ in wg.

TOTAL PRESSURE LOSS $= (0.182 + 0.094 + 0.07)$ psi $\times \frac{27.68}{\text{psi}} + 0.385''$ wg

TOTAL PRESSURE LOSS = 9.06 in wg

THEREFORE: SELECT BLOWER W/ 300 CFM @ 10" wg STATIC PRESSURE

C.K. Dd.

Compressible Flow Pressure Loss Results	Piping, Valves, and Fittings	
F sure Loss (psi): 0.182	(From BLOWER TO STORAGE TANK AIR INLET. EXCLUDING CHECK VALVE	
Job Number: CPG0465 **Client:** Metcon **Date:** 04.25.06 **Line Number:** **Fluid:** Air **Nominal Pipe Size:** 4 **Pipe Schedule:** SCH 80 **Flow Rate:** 300 SCFM **Viscosity (cP):** 0.018 **Inlet Pressure (PSIG):** 0 **Temperature (F):** 70 **Pipe Roughness (ft):** 0.00021 **Actual Pipe ID (in.):** 3.826 **Fluid Velocity (ft/sec):** 63.86 **Reynolds Number:** 126185 **Flow Region:** Turbulent **Friction Factor:** 0.0204 **Pressure Loss (psi):** 0.182 **Net Expansion Factor:** 0.993 **Inlet Mach Number:** 0.057 **Outlet Mach Number:** 0.057 **Density at Inlet:** 0.075 **Specific Volume at Inlet:** 13.34 **K1:** 217.47 **K2:** 212.01 **O ll K:** 5.46 **S c Heat Ratio:** 1.4 **M iterations:** 164 **Friction Factor iterations:** 4	**Piping Length (ft):** 30 **Long Radius Elbows:** 0 **Short Radius Elbows:** 2 **5 Diameter Elbows:** 0 **45 degree Elbows :** 0 **Standard 90 degreeThreaded Elbows:** 0 **45 degree Standard Elbows :** 0 **Tee Flow Through:** 1 **Tee Flow Branch :** 1 **Gate:** 0 **Globe :** 0 **Swing Check:** 0 **Lift Check :** 0	**3 Way Plug :** 0 **Ball :** 0 **Plug:** 0 **Butterfly 2in. to 8in. :** 0 **Butterfly 10in. to 14in. :** 0 **Butterfly Greater Than 14in. :** 0 **Angle Valve Flow Up:** 0 **Angle Valve Flow Down :** 0 **Pipe Entrance:** 1 **Pipe Exit :** 1 **No. of Reducers:** 0 **Reducer Outlet Size (in) :** 0 **No. of Increasers:** 0 **Increaser Outlet Size (in) :** 0

'Copy and Paste' Pressure Loss or Head Loss into other applications
If any output is NaN click back button and make sure all Fluid and Piping and Valves and Fittings fields contain values, enter 0 if necessary

COMPRESSIBLE FLOW PRESSURE LOSS RESULTS
BY COMPUTER SOFT WARE TAKEN TO BE CORRECT.
[illegible]

Compressible Flow Pressure Loss Results	Piping, Valves, and Fittings	
ssure Loss (psi): 0.094	(FROM STORAGE TANK AIR OUTLET TO ATMOSPHERE)	
Job Number: CPG0465 **Client:** Metcon **Date:** 04.24.06 **Line Number:** **Fluid:** Air **Nominal Pipe Size:** 4 **Pipe Schedule:** SCH 80 **Flow Rate:** 300 SCFM **Viscosity (cP):** 0.018 **Inlet Pressure (PSIG):** 0 **Temperature (F):** 70 **Pipe Roughness (ft):** 0.00021 **Actual Pipe ID (in.):** 3.826 **Fluid Velocity (ft/sec):** 63.86 **Reynolds Number:** 126185 **Flow Region:** Turbulent **Friction Factor:** 0.0204 **Pressure Loss (psi):** 0.094 **Net Expansion Factor:** 0.994 **Inlet Mach Number:** 0.057 **Outlet Mach Number:** 0.057 **Density at Inlet:** 0.075 **Specific Volume at Inlet:** 13.34 **K1:** 217.47 **K2:** 214.63 **Overall K:** 2.84 ific Heat Ratio: 1.4 iterations: 164 **Friction Factor iterations:** 4	**Piping Length (ft):** 5 **Long Radius Elbows:** 0 **Short Radius Elbows:** 0 **5 Diameter Elbows:** 0 **45 degree Elbows :** 0 **Standard 90 degreeThreaded Elbows:** 0 **45 degree Standard Elbows :** 0 **Tee Flow Through:** 0 **Tee Flow Branch :** 1 **Gate:** 0 **Globe :** 0 **Swing Check:** 0 **Lift Check :** 0	**3 Way Plug :** 0 **Ball :** 0 **Plug:** 0 **Butterfly 2in. to 8in. :** 0 **Butterfly 10in. to 14in. :** 0 **Butterfly Greater Than 14in. :** 0 **Angle Valve Flow Up:** 0 **Angle Valve Flow Down :** 0 **Pipe Entrance:** 1 **Pipe Exit :** 1 **No. of Reducers:** 0 **Reducer Outlet Size (in) :** 0 **No. of Increasers:** 0 **Increaser Outlet Size (in) :** 0

'Copy and Paste' Pressure Loss or Head Loss into other applications
If any output is NaN click back button and make sure all Fluid and Piping and Valves and Fittings fields contain values, enter 0 if necessary

SOFTWARE OUTPUT TAKEN TO BE CORRECT.

SEVERN TRENT SERVICES

PROJECT: CITY OF WINNIPEG

SUBJECT: CALCULATIONS OF TOTAL PRESSURE LOSS ON 12"Ø VENT PIPE FOR STAND PIPE DILUTION SYSTEM W/ 2700 CFM AIR FLOW RATE

TOTAL PRESSURE LOSS $= P_{L1} + P_{L2} + P_{L3} + P_{L4}$

WHERE:

P_{L1} = PRESSURE LOSS FROM BLOWER TO STAND PIPE EXCLUDING BACKDRAFT DAMPER. (REFER TO B-1)

P_{L2} = PRESSURE LOSS FROM STAND PIPE TO VENT OUTLET (REFER TO B-2)

P_{L3} = PRESSURE LOSS DUE TO BACKDRAFT DAMPER (REFER TO B-3)

P_{L4} = PRESSURE LOSS AT TRANSITION FITTING FROM BLOWER TO BACKDRAFT DAMPER.

$P_{L4} = VP_1 + EL$

where:

VP_1 — ACCELERATION LOSS

EL — ENTRY LOSS.

$VP_1 = \left(\frac{V}{4005}\right)^2$, $V = Q/A$

$Q = 2700$ CFM

A = BLOWER OUTLET AREA $= 12'' \times 10\frac{3}{8} = 1.6\,ft^2$

$V = 2700/1.6 = 1687.5$ FPM.

$VP_1 = \left(\frac{1687.5}{4005}\right)^2 = 0.177$ in wg.

$EL = 0.9\left(\frac{Vel}{4005}\right)^2 = (0.9)(0.177) = 0.16$ in wg

$P_{L4} = (0.177 + 0.16)$ in wg $= 0.337$

TOTAL PRESSURE LOSS $= (0.141 + 0.08)\,psi \times \frac{27.68''\,wg}{psi} + (0.15 + 0.337)$ in wg

TOTAL PRESSURE LOSS = 6.6 in wg

THEREFORE: SELECT BLOWER w/ 2700 CFM CAPACITY @ 6.6 in wg STATIC PRESSURE

O.K. AC

Severn Trent Water Purification, Inc. • 2660 Columbia Street • Torrance, CA 90503 • Tel 310-533-5849
Fax 310-618-1384 • www.severntrentservices.com

8" Utility Swing Check Valve pressure/angle relationship.

This table shows how much air pressure is necessary to open and keep the flapper at the specific angle.

Flapper weight G[Lb]	2.85	1.53	0.47	0.23	0.09
Diametar of the flapper d[in]	8	6	4	3	2

p[psi]= G[Lb]/(cos(α)*Π*(d[in]^2)/2)

PRESSURE OF 4" SWING CHECK VALVE

angle [deg]	p [psi]	p [psi]	p [psi]	p [psi]	p [psi]
45	0.08	0.08	0.05	0.05	0.04
50	0.09	0.08	0.06	0.05	0.04
55	0.10	0.09	0.07	0.06	0.05
60	0.11	0.11	0.07	0.07	0.06
65	0.13	0.13	0.09	0.08	0.07
70	0.17	0.16	0.11	0.10	0.08
75	0.22	0.21	0.14	0.13	0.11
80	0.33	0.31	0.22	0.19	0.17
85	0.65	0.62	0.43	0.37	0.33
86	0.81	0.78	0.54	0.47	0.41
87	1.08	1.03	0.72	0.62	0.55
88	1.63	1.55	1.07	0.93	0.82
89	3.25	3.10	2.14	1.87	1.64
89.97	108.34	103.40	71.47	62.18	54.74
89.978332	150.00	143.16	98.95	86.08	75.79
89.97932		150.00			
89.985706			150.00		
89.987565				150.00	
89.989052					150.00

dk.DD.

A-3

Compressible Flow Pressure Loss Results	Piping, Valves, and Fittings	
Pressure Loss (psi): 0.141	(FROM BLOWER TO STAND PIPE EXCLUDING BACKDRAFT DAMPER)	
J. mber: CPG0465 Client: Metcon Date: 04.25.06 Line Number: Fluid: Nominal Pipe Size: 12 Pipe Schedule: SCH 80 Flow Rate: 2700 SCFM Viscosity (cP): 0.018 Inlet Pressure (PSIG): 0 Temperature (F): 70 Pipe Roughness (ft): 0.00021 Actual Pipe ID (in.): 11.374 Fluid Velocity (ft/sec): 65.04 Reynolds Number: 382016 Flow Region: Turbulent Friction Factor: 0.016 Pressure Loss (psi): 0.141 Net Expansion Factor: 0.993 Inlet Mach Number: 0.058 Outlet Mach Number: 0.058 Density at Inlet: 0.075 Specific Volume at Inlet: 13.34 K1: 209.53 K2: 205.45 Overall K: 4.08 Specific Heat Ratio: 1.4 ' rations: 164 ion Factor iterations: 3	Piping Length (ft): 45 Long Radius Elbows: 0 Short Radius Elbows: 3 5 Diameter Elbows: 0 45 degree Elbows : 0 Standard 90 degreeThreaded Elbows: 0 45 degree Standard Elbows : 0 Tee Flow Through: 1 Tee Flow Branch : 1 Gate: 0 Globe : 0 Swing Check: 0 Lift Check : 0	3 Way Plug : 0 Ball : 0 Plug: 0 Butterfly 2in. to 8in. : 0 Butterfly 10in. to 14in. : 0 Butterfly Greater Than 14in. : 0 Angle Valve Flow Up: 0 Angle Valve Flow Down : 0 Pipe Entrance: 1 Pipe Exit : 1 No. of Reducers: 0 Reducer Outlet Size (in) : 0 No. of Increasers: 0 Increaser Outlet Size (in) : 0

'Copy and Paste' Pressure Loss or Head Loss into other applications
If any output is NaN click back button and make sure all Fluid and Piping and Valves and Fittings fields contain values, enter 0 if necessary

SOFTWARE OUTPUT TAKEN TO BE CORRECT

(B-1)

Compressible Flow Pressure Loss Results	Piping, Valves, and Fittings	
[illegible]sure Loss (psi): 0.08	(FROM STAND PIPE TO VENT OUTLET)	
Job Number: CPG0465 **Client:** Metcon **Date:** 04.24.06 **Line Number:** **Fluid:** Air **Nominal Pipe Size:** 12 **Pipe Schedule:** SCH 80 **Flow Rate:** 2700 SCFM **Viscosity (cP):** 0.018 **Inlet Pressure (PSIG):** 0 **Temperature (F):** 70 **Pipe Roughness (ft):** 0.00021 **Actual Pipe ID (in.):** 11.374 **Fluid Velocity (ft/sec):** 65.04 **Reynolds Number:** 382016 **Flow Region:** Turbulent **Friction Factor:** 0.016 **Pressure Loss (psi):** 0.08 **Net Expansion Factor:** 0.994 **Inlet Mach Number:** 0.058 **Outlet Mach Number:** 0.058 **Density at Inlet:** 0.075 **Specific Volume at Inlet:** 13.34 **K1:** 209.53 **K2:** 207.2 **Overall K:** 2.33 **[illegible]ific Heat Ratio:** 1.4 **M[illegible]terations:** 164 **Friction Factor iterations:** 3	**Piping Length (ft):** 3 **Long Radius Elbows:** 0 **Short Radius Elbows:** 0 **5 Diameter Elbows:** 0 **45 degree Elbows :** 0 **Standard 90 degreeThreaded Elbows:** 0 **45 degree Standard Elbows :** 0 **Tee Flow Through:** 0 **Tee Flow Branch :** 1 **Gate:** 0 **Globe :** 0 **Swing Check:** 0 **Lift Check :** 0	**3 Way Plug :** 0 **Ball :** 0 **Plug:** 0 **Butterfly 2in. to 8in. :** 0 **Butterfly 10in. to 14in. :** 0 **Butterfly Greater Than 14in. :** 0 **Angle Valve Flow Up:** 0 **Angle Valve Flow Down :** 0 **Pipe Entrance:** 1 **Pipe Exit :** 1 **No. of Reducers:** 0 **Reducer Outlet Size (in) :** 0 **No. of Increasers:** 0 **Increaser Outlet Size (in) :** 0

'Copy and Paste' Pressure Loss or Head Loss into other applications
If any output is NaN click back button and make sure all Fluid and Piping and Valves and Fittings fields contain values, enter 0 if necessary

SOFTWARE OUTPUT TAKEN TO BE CORRECT DD

143
Aug.02, 2006

B-2

24" (610) 12" (305)	12.0" w.g. 14.0" w.g.	4000 fpm 4000 fpm	0.39 0.45	15.5 18.0	1.50 2.50	100

*Leakage information based on pressure differential of 1" w.g.

DAMPER PRESSURE DROP

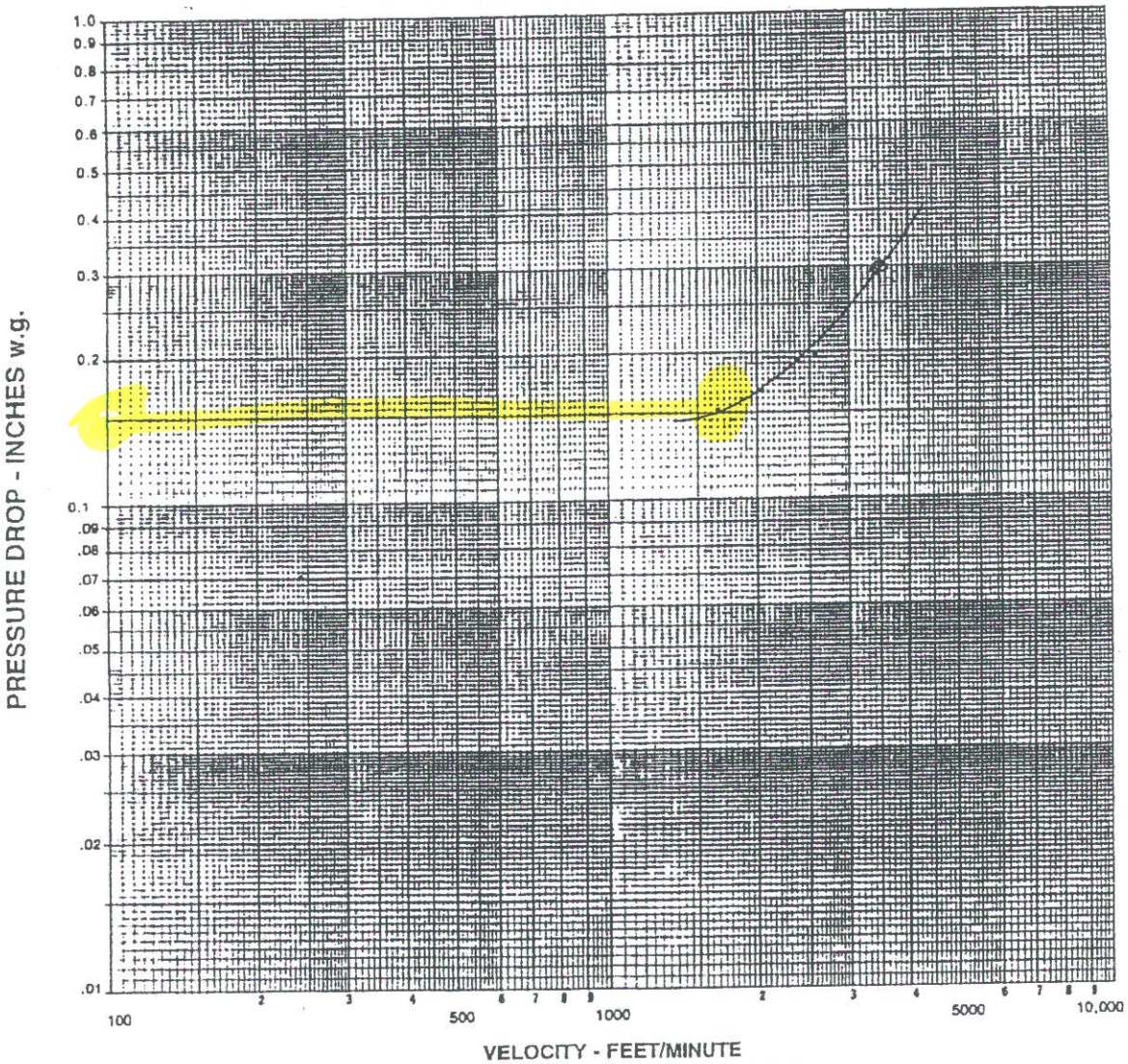

$Q = VA$

$V = \frac{Q}{A} = \frac{2700 \frac{FT^3}{min}}{\frac{12'' \times 19^{3/8}}{144}} = 1{,}687.5 \ FT/min$

$V = 1{,}687.5 \ FT/min$

PRESSURE DROP AT 1,687.5 fpm
→ 0.15 in wg.

TYPICAL PERFORMANCE

Based on testing of size 24" x 24" (610 x 610) per AMCA Standard 500 using Test Setup Apparatus figure 5.3 (damper is installed with duct upstream and downstream).

Section
8

MISCELLANEOUS ITEMS

Cables

Lugs

Air Flow Switch

Differential Pressure Switch

Filter Housing, 20mm (FLT-J100D, FLT-J300, FLT-J310, FLT-J320)

Filter Housing, 25mm (FLT-J001D, FLT-J002B, FLT-J003C, FLT-J400A, FLT-J420A, FLT-J440A)

Temperature Gauge (TIT-J300A)

Thermocouple (TE-J300A)

Pressure Regulator Valve (PCV-J001)

DLO Power Cable

American stocks two types of UL listed DLO power cable, the **Industrial Motor Lead Cable** and a **Marine Shipboard Cable**. Both versions are 2000 volts, single conductor, flexible stranded cables with an EPR insulation and a heavy-duty CSPE jacket.

American DLO Cable - Standard Features:

- MSHA accepted, OSHA acceptable
- General use at voltages up to 2kV where flexibility and portability are essential
- Passes IEEE 383 70,000 BTU/hour flame test (1/0 AWG and larger)
- Ideal for tough bends and difficult installations
- Resistant to sunlight, abrasion, ozone, most chemicals, and oil
- Lead free
- Passes cold bend and impact at -40˚C

DLO Industrial Motor Lead Cable - Specific Features:

- UL RHH/RHW-2 2kV and c(UL) RW-90 1kV listed
- For operation at 90˚C in wet and dry locations
- Suitable for installation in cable tray (CT use rated 1/0 AWG and larger)

DLO Shipboard Cable - Specific Features:

- UL listed as Marine Shipboard Cable up to 2kV
- CSA RW-90 (90˚C wet or dry) up to 1kV
- FT4 rated
- CSA Type TC Tray Cable listed (1/0 AWG and larger)

Distributed by:

American Insulated Wire Corporation
95 Grand Ave., P. O. Box 880
Pawtucket, Rhode Island 02862-0880
401-642-2200 • Fax 401-642-2220
Visit us at www.aiwc.com

THE MULTI-PURPOSE CABLES WITH THE APPLICATION SPECIFIC NAME

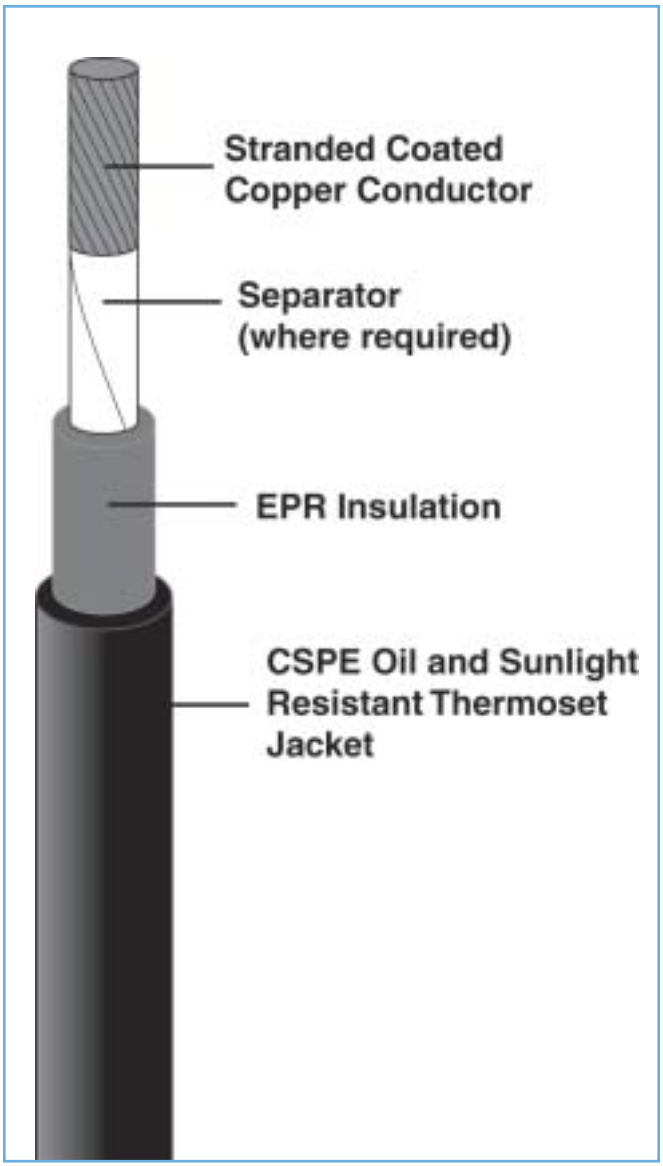

MSHA Accepted
OSHA Acceptable

Although DLO (Diesel Locomotive) Cable was originally developed for wiring diesel-electric locomotives its applications now range far beyond that specific use. These cables were designed for use as motor and power leads when flexibility and portability are required. The inherent nature of the design makes the cables suitable for a diverse, ever-expanding number of applications.

DLO & Industrial Motor Lead Cables

In addition to their application as motor and power leads, these cables are suitable for use in wiring diesel-electric locomotives, railroad and transit cars, earth moving equipment, drilling rigs (land based), storage batteries, charging equipment and as flexible wiring for installation in open air or conduit per the N.E.C. They are UL listed as RHH/RHW-2 2kV, c(UL) certified as type RW-90 1kV, 90˚C and FT1 rated. Cables 1/0 AWG and larger pass the UL-1685 and IEEE 383 70,000 BTU/hour ribbon burner vertical tray flame tests and are approved for installation in cable tray. They are MSHA accepted in sizes 14 AWG through 929.2 KCMIL. These cables are available in standard sizes 14 AWG through 1111 KCMIL.

DLO & Marine Shipboard Cable

Marine Shipboard Cables are suitable for many industrial motor lead cable applications. These cables are also UL listed as Marine Shipboard Cable, rated 90˚C and CSA certified RW-90 (90˚C wet or dry). Sizes 1/0 AWG and larger are CSA Type TC, FT4 rated and pass CSA FT4, UL-1685 and IEEE 383 70,000 BTU/hour ribbon burner vertical tray flame tests. These additional ratings expand their application further and make them suitable for marine vessel, shipyard and offshore drilling rig use. Marine Shipboard Cable is available in standard sizes 8 AWG through 929 KCMIL.

For additional sizes or special requests, please contact your American Sales Representative.

Single Cond. DLO • Industrial Motor Lead Cable • Lead Free UL Listed • 14 AWG - 1111 KCMIL • 2000 Volts • 90˚C

Applications: These cables were designed for use as motor and power leads where flexibility and portability are required. DLO cables are also suitable for use in wiring diesel-electric locomotives, railroad and transit cars, earth moving equipment, drilling rigs, storage batteries, charging equipment and flexible wiring for installation in open air or conduit per the N.E.C. Passes cold bend and impact at -40˚C.

Conductor: Tin-coated annealed copper per ASTM B-33 and B-172 or B-174.

Separator (Sizes 4 AWG and larger only):
A suitable opaque separator tape shall be used over the conductor to facilitate stripping.

Insulation: Ethylene propylene rubber (EPR) conforming to UL-1581 for Class EP Table 50.42, UL-44 requirements for RHH and RHW-2, ASTM D-2270 and ICEA S-95-658, Class E-1. It shall be suitable for conductor temperatures up to 90˚C in wet or dry locations for continuous use, 130˚C for emergency overloads, and 250˚C for short circuits.

Jacket: Heavy-duty chlorosulfonated polyethylene (CSPE) conforming to ICEA S-95-658, Par. 4.1.11 and UL-1581 Table 50.1.

Print Legends:
The surface of the jacket shall be printed using white ink and with the following information:

14 AWG thru 1 AWG: *"Size AWG Type RHH or RHW-2 2kV -40˚C (UL) (E No.)---A.I.W. Corp.---c(UL) Type RW90 EP/Jkt -40˚C 1kV FT1---EPR/Hyp 2kV Diesel Locomotive Cable P-7K-No.-MSHA"*

1/0 AWG thru 929.2 KCMIL: *"Size AWG (or KCMIL) Type RHH or RHW-2 2kV -40˚C for CT use (UL) (E No.)---A.I.W. Corp.---c(UL) (size printed here on 250 & larger only) Type RW90 EP/Jkt -40˚C 1kV FT1---EPR/Hyp 2kV Diesel Locomotive Cable P-7K-No.-MSHA"*

1111 KCMIL (600 Volt) Only: *"1111 KCMIL Type RHH or RHW-2 600V -40˚C for CT use (UL) (E No.)---A.I.W. Corp.---c(UL) 1000 KCMIL Type RW90 EP/Jkt -40˚C 1kV FT1---EPR/Hyp 2kV Diesel Locomotive Cable P-7K-No.-MSHA"*

Note: 262 KCMIL and larger are marked at the next lowest CSA recognized size. (Example: 262 is CSA 250, etc.)

CABLE DATA

PART NUMBER	SIZE	STRANDING	CONDUCTOR O.D.	INSULATION THICKNESS	JACKET THICKNESS	NOMINAL O.D.	AMPS[1]	SHIP WT. LBS./M FT
16285	14	19/.0147	.073	.045	.015	.215	35	32
16288	12	19/.0185	.092	.045	.015	.235	40	45
16289	10	27/.0201	.123	.045	.030	.295	55	61
24400	8	41/.0201	.156	.055	.030	.350	80	96
34118	6	65/.0201	.186	.060	.030	.390	105	135
34155	4	105/.0201	.240	.060	.030	.440	140	215
23875	2	168/.0201	.325	.060	.045	.565	190	324
36953	1	224/.0201	.390	.080	.045	.675	220	456
23876	1/0	273/.0201	.420	.080	.045	.705	260	516
28678	2/0	324/.0201	.460	.080	.045	.750	300	600
30224	3/0	448/.0201	.565	.080	.045	.850	350	815
16293	4/0	532/.0201	.564	.080	.045	.865	405	940
16296	262	646/.0201	.660	.095	.065	1.020	470	1111
16298	313	775/.0201	.740	.095	.065	1.095	510	1332
16300	373	925/.0201	.790	.095	.065	1.150	590	1537
16301	444	1110/.0201	.870	.095	.065	1.230	655	1801
16304	535	1332/.0201	.910	.110	.065	1.325	730	2214
16306	646	1591/.0201	1.060	.110	.065	1.450	815	2592
16307	777	1924/.0201	1.120	.110	.065	1.525	905	3062
33655	929	2318/.0201	1.230	.110	.065	1.630	1005	3674
18091	1111	2745/.0201	1.370	.125	.095	1.880	1115	4478

[1]Ampacities (amps per conductor) are based on single conductor in free air, 30˚C ambient air temperature, 90˚C conductor temperature per Table 310-17 of the NEC.

The data listed is approximate and subject to change without notice.

Single Conductor DLO • Marine Shipboard Cable • Lead Free UL Listed • 8 AWG - 1111 KCMIL • 2000 Volts • 90˚C

Applications: These cables were designed for use as motor and power leads where flexibility and portability are required. DLO cables are also suitable for use in wiring diesel-electric locomotives, railroad and transit cars, earth moving equipment, offshore drilling rigs, storage batteries, charging equipment and flexible wiring for installation in open air or conduit per the CEC. Passes cold bend and impact at -40˚C.

Conductor: Class I stranded, tin-coated annealed copper per ASTM B-33 and B-172.

Separator: A suitable opaque separator tape shall be used over the conductor to facilitate stripping.

Insulation: Ethylene propylene rubber (EPR) conforming to UL-1309 Type E90 (0-2kV) and CSA C22.2 No. 38 requirements. It shall be suitable for conductor temperatures up to 90˚C in wet or dry locations for continuous use, 130˚C for emergency overloads, and 250˚C for short circuits.

Jacket: Heavy-duty CSPE conforming to ICEA S-95-658 Par. 4.1.11 and UL-1309 Type CP requirements.

Print Legends:
The surface of the jacket shall be printed using white ink and with the following information:

"DLO (size) AWG (or KCMIL) 2kV E86047G (UL) Marine Shipboard Cable 90˚C (year)---A.I.W. Corp.---(CSA monogram) LL8825 RW-90 EP 1kV (-40˚C) EP/JKT Oil Res. FT1"

Notes: All sizes shall be indent printed *"P-7K-122015 MSHA."*

For sizes 1/0 AWG and larger add *"TC"* after *"Oil Res."* and substitute *"FT4"* for *"FT1."*

For sizes 262.6 KCMIL and larger add the CSA cable size after *"RW-90 EP."*

CSA cables sizes are rounded off to the next lowest qualifying size. Example: 262.6 KCMIL is CSA size 250 KCMIL.

CABLE DATA

PART NUMBER	SIZE	STRANDING	CONDUCTOR O.D.	INSULATION THICKNESS	JACKET THICKNESS	NOMINAL O.D.	AMPS[1]	SHIP WT. LBS./M FT
39009	8	41/.0201	.156	.060	.030	.355	80	95
39008	6	65/.0201	.186	.060	.030	.385	105	145
39007	4	105/.0201	.240	.060	.030	.465	140	213
39006*	2	168/.0201	.325	.060	.030	.545	190	277
39005	1	224/.0201	.390	.080	.045	.680	220	437
39004	1/0	273/.0201	.420	.080	.045	.710	260	514
39245*	2/0	324/.0201	.460	.080	.045	.745	300	592
39003	3/0	448/.0201	.565	.080	.045	.850	350	782
38847*	4/0	532/.0201	.564	.080	.045	.855	405	911
38962	262	646/.0201	.660	.095	.065	1.030	470	1146
38846*	313	775/.0201	.740	.095	.065	1.115	510	1362
38845	373	925/.0201	.790	.095	.065	1.160	590	1594
38963	444	1110/.0201	.870	.095	.065	1.245	655	1882
38826*	535	1332/.0201	.910	.110	.065	1.320	730	2226
39002	646	1591/.0201	1.060	.110	.065	1.470	815	2629
38827	777	1924/.0201	1.120	.110	.065	1.525	905	3119
-	929	2318/.0201	1.230	.110	.065	1.630	1005	3754
-	1111	2425/.0201	1.370	.125	.095	1.870	1115	4478

*Authorized stock items.

[1]Ampacities (amps per conductor) are based on single conductor in free air, 30˚C ambient air temperature, 90˚C conductor temperature per Table 310-17 of the NEC.

The data listed is approximate and subject to change without notice.

American Insulated Wire Corporation
95 Grand Ave., P. O. Box 880, Pawtucket, Rhode Island 02862-0880
401-642-2200 • Fax 401-642-2220 • Visit us at www.aiwc.com

DRAWING NO. SD031189

REV.	DATE	DESCRIPTION	ECO	BY	C'K'D.
A	04/22/03	UPDATE FORMAT AND CHG. WIRE STRIP LENGTH TO 3-1/4" FOR ALL CAT. #'S.	8401	DB	PL

CATALOG NUMBER 10	STRANDED COPPER CONDUCTOR ACCOMMODATED			BOLT SIZE	METRIC BOLT SIZE	DIMENSIONS								
	CODE (AWG)	NAVY	METRIC SIZE (CLASS 2)			B	C	E	K DIA	L	N	O.D.	T REF	Z MIN
YA45-2N	1250 kcmil	-----	-----	1/2	M12	3.19 [81]	2.46 [62]	1.75 [44]	.56 [14]	7.44 [189]	.63 [16]	1.69 [43]	.38 [10]	.64 [16]
YA453-2N	1300 kcmil	-----	-----	1/2	M12	3.19 [81]	2.53 [64]	↕	↕	7.48 [190]	↕	1.74 [44]	.39 [10]	↕
YA46-2N	1500 kcmil	-----	800mm² STR [37.6]	1/2	M12	3.19 [81]	2.69 [68]	1.75 [44]	.56 [14]	7.55 [192]	.63 [16]	1.84 [47]	.40 [10]	.64 [16]

CONNECTOR SIZE	TOLERANCES						
	B	C	E	K DIA.	L	N	O.D.
-6C THRU -25	±.06	+.04 -.02	±.02	±.02	±.09	±.03	±.01
-26 THRU -34	±.08	+.04 -.06	±.02	±.02	±.12	±.03	±.01
-35 AND UP	±.09	±.06	±.02	±.02	±.15	±.06	±.01

TOLERANCE BLOCK

INSTALLATION TOOLING (# CRIMPS)

CATALOG NO.	COLOR CODE	DIE INFORMATION		MECHANICAL					HYDRAULIC						DIELESS (# CRIMPS)	WIRE STRIP LENGTH
		DIE INDEX	TYPE	Y2MR 5	OUR840	MD6 MD7	MD6--R2 BAT500	MD7-34R	Y34A Y34B Y34BH 7	Y35, Y39 Y750, BAT35 BAT750	Y46 4	Y45 3	Y48B	Y60BHU		
YA45-2N	YELLOW	29	YELLOW DIE SET	-----	-----	-----	-----	-----	-----	-----	P45RT(6)	S45RT(6)	C45R(3)	L45RT(3)	-----	3-1/4"
			NEST INDENTOR	-----	-----	-----	-----	-----	-----	-----	P45D(3) P44PR	-----	C45D(3) Y48PR	-----		
YA453-2N	ORANGE	30	ORANGE DIE SET	-----	-----	-----	-----	-----	-----	-----	-----	-----	-----	-----		3-1/4"
			NEST INDENTOR	-----	-----	-----	-----	-----	-----	-----	-----	-----	C453D(4) Y48PR	-----		
YA46-2N	GREEN	31	GREEN DIE SET	-----	-----	-----	-----	-----	-----	-----	P46RT(6)	S46RT(6)	C46R(3)	L46RT(3)		3-1/4"
			NEST INDENTOR	-----	-----	-----	-----	-----	-----	-----	12 P44PR(2)	-----	C46D(3) Y48PR	-----		

NOTES:

1. MATERIAL: COPPER TUBING
2. FINISH: TIN PLATED. FOR UNPLATED VERSION ADD SUFFIX "BR" TO CATALOG NUMBER ex. YA45-2NBR.
3. CATALOG # PT6515 ADAPTOR IS REQUIRED TO USE "U" DIES IN Y45 SERIES TOOLS.
4. CATALOG # PUADP-1 ADAPTOR IS REQUIRED TO USE "U" DIES IN Y46 SERIES TOOLS.
5. PERMANENT DIE IN TOOLING.
6. DIMENSIONS IN BRACKETS [ ] ARE IN MILLIMETERS ROUNDED OFF TO THE NEAREST MILLIMETER, UNLESS OTHERWISE NOTED, AND ARE FOR REFERENCE ONLY.
7. FOR USE BY CUSTOMERS THAT HAVE THIS HYPRESS.™ NO NEW Y34A HYPRESSES™ ARE BEING PROCESSED. Y34A USES A--D TYPE NEST DIES.
8. CONNECTORS ARE UL LISTED; UNDRILLED VERSIONS ARE NOT UL LISTED.
9. CONNECTORS ARE CSA CERTIFIED; UNDRILLED VERSIONS ARE NOT CSA CERTIFIED.
10. FOR UNDRILLED VERSIONS ADD SUFFIX "-U" TO END OF CATALOG NUMBER. FOR UNDRILLED VERSIONS, USE D MIN. = N MAX. + E MIN. + Z MIN.
11. "X", "W-RT", "W-VT", "U", & "L" DIE SETS ARE COLOR CODED. "A", "B", AND "C" DIES ARE NOT COLOR CODED. NESTS AND INDENTOR TYPE ARE NOT COLOR CODED.
12. INDENTOR ONLY - NO NEST REQUIRED.

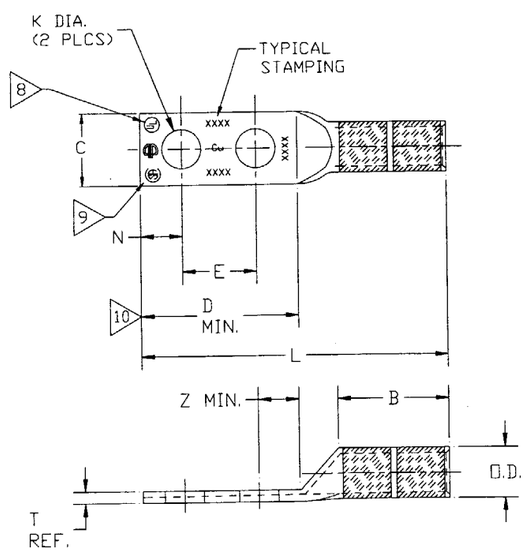

REFERENCE: SE209513

TO ORDER BURNDY PRODUCTS CALL 1-800-346-4175
MANCHESTER, NH 03109, USA
FOR PRODUCT INFO = http://www.fciconnect.com

HYLUG ™

ITEM NO: N/A

CAT NO: YA-2N (TABLE)

SCALE:	1/1	
DRAWN BY:	J.MICHAUD	11/18/94
CHECKER:	D.FILLION	11/16/94
DSN APPVL:	C.PALAGI	10/24/94
MFG APPVL:	N/A	--
QC APPVL:	C.ACKERMAN	11/17/94
MKT APPVL:	T.NELSON	11/10/94
PROD FAM:	--	
PROJECT #:	--	
DOCUMENT TYPE:	Sales	
REL LEVEL:	AutoCAD	

FCI

DRAWING NO	REV
SD031189	A

SIZE D

SHEET 7 OF 10

Series V8

FLOTECT® Vane Operated Flow Switch

Field adjustable — 1 to 6 inch pipe. Leak proof body.

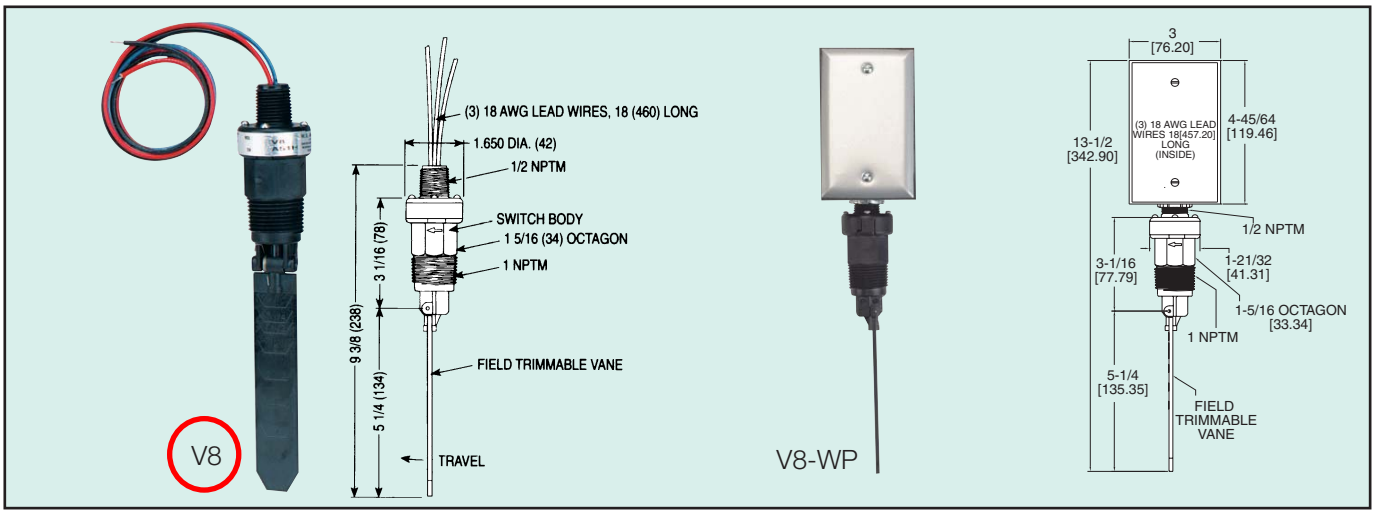

V8 Flotect Protects Equipment: Operation is simple and dependable. In most applications, the switch is normally off while there is sufficient flow of liquid or air. When flow stops, the vane spring moves the vane, actuating a single pole double throw switch rated at 5A 120/250 VAC to start or stop motor, pump, engine, etc. Operate a damper or valve; shut down a burner or actuate an alarm or signal, protecting unattended equipment from damage or loss of production.

The V8 Flotect® Flow Switch has a leak proof body and vane constructed of tough durable polyphenylene sulfide (equivalent to RYTON®) which has excellent chemical resistance. The full size trimmable vane is provided with molded-in graduations allowing for installation in a 1 inch through 6 inch pipe. Operating pressures are up to 150 PSIG (10 Bar) and temperatures to 212°F (100°C). The V8 flow switch can be used in various chemical processes, industrial systems and similar applications where process conditions are compatible with polyphenylene sulfide, ceramic 8 and 316SS. The V8 Flotect control is UL recognized as an industrial motor controller per UL standard 508, suitable for mounting in a protected environment.

Cold Water Flow Rates Approximate actuation/deactuation **GPM** upper, **LPM** lower		**Air Flow Rates** Approximate actuation/deactuation **SCFM** upper, **NM³/H** lower	
Pipe Size		**Pipe Size**	
1"	10.8/9.1 40.9/34.6	1"	39/32.6 66.3/55.4
1¼"	9.8/8.3 37.2/31.4	1¼"	37.5/32.2 63.7/54.7
1½"	8.6/6.8 32.4/25.7	1½"	33.4/26.7 56.7/45.4
2"	10.9/8.8 41.2/33.4	2"	43/36.8 73.1/62.5
3"	12.9/8.9 48.8/33.5	3"	52.7/38.9 89.6/66
4"	21.1/13.8 79.7/52.2	4"	87.6/63.6 148.9/108.1
6"	45/33 170.2/124.7	6"	168.6/137.4 286.5/233.4

APPLICATIONS

Applications are chemical processing, air conditioning, refrigeration, heating systems, cooling lines, machinery, liquid transfer systems, water treatment, food processing, and machine tools. Also, other applications compatible with the materials of construction.

PHYSICAL DATA

Temperature Limit: 212°F (100°C) maximum.
Operating Pressure: 150 psig (10 Bar)
Piping Connection: 1" NPT installed in tee or bushing (not supplied).
Electrical Rating: One SPDT snap action switch 5 A, 125/250 VAC.
Wire: 18 AWG 18" long (460mm).
Overall Length: 9.375 inches (238mm).
Switch Body: Molded Polyphenylene Sulfide (PPS)
Wetted Materials of Construction: Polyphenylene Sulfide, Ceramic 8 magnet, 316SS pin and spring.
Vane: Field trimmable to fit most applications.
Installation: Install with index arrow in direction of flow.
Weight: 4.5 oz.(0.13 kg)

STOCKED MODEL

V8 Flow Switch .....

OPTIONS:

Gold Plated Contacts, for dry circuits. Rated 1A @ 125 VAC; 1A resistive, 0.5A inductive @ 30 VDC. To order add suffix -MV. Example: **V8-MV** . . . . . .

Inconel® Option. Inconel® replaces standard 316 SS wetted parts. Wetted parts are Inconel®, ceramic 8, and Polyphenylene Sulfide. To order add suffix -INC.
Example: **V8-INC** . . . . . .

Weatherproof Enclosure. Optional housing is aluminum and provides weatherproof protection for electrical wiring. To order add suffix -WP.
Example: **V8-WP** . . . . . .

Suggested Specifications:

Automatic Polyphenylene Sulfide plastic flow switch shall be vane operated to actuate a single pole, double throw snap switch. Motion of the vane shall actuate switch by action of a magnet which controls the switch inside the one piece leak proof switch body. Control shall be suitable for pressure up to 150 psig (10 Bar) and temperature to 212°F (100°C). Switch shall be W.E. Anderson Model No. V8.

Dwyer Instruments, Inc. P.O. Box 373/Michigan City, Indiana 46361/Phone 219 879-8000/Fax 219 872-9057 • U.K. Phone (01494)-461707 • Australia Phone (02) 9756-5355

Series 1900

Compact Low Differential Pressure Switches

Set Points from 0.07" to 20" W.C. Repetitive Accuracy within 3%

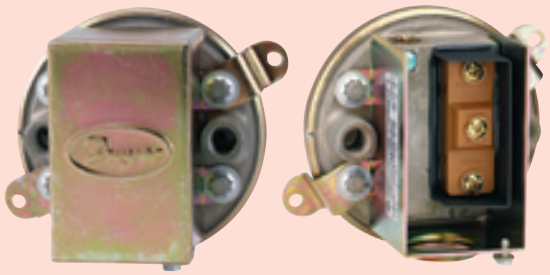

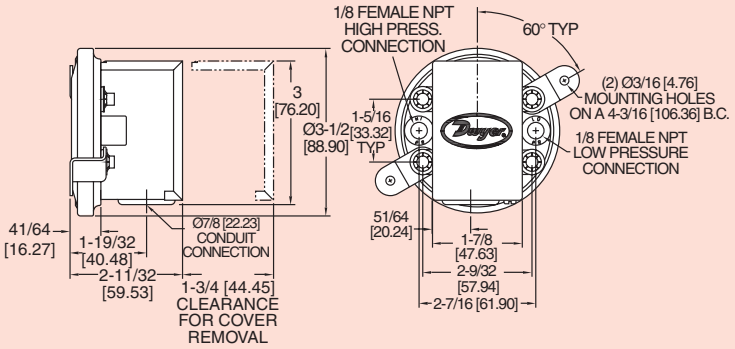

Series 1910 pressure switch. All pressure and electrical connections and set point adjustments are on one side for easy installation.

Series 1910 switch with conduit enclosure off. Shows electric switch and set point adjustment screw.

The Dwyer-engineered force-motion amplifier increases the leverage of diaphragm movement and results in a switch with excellent sensitivity and repeatability.

Our most popular series combines advanced design and precision construction to make these switches able to perform many of the tasks of larger, costlier units. Designed for air conditioning service, they also serve many fluidics, refrigeration, oven and dryer applications. For air and non combustible compatible gases, Series 1900 switches have set points from 0.07 to 20˝ (1.8 to 508 mm) w.c. Set point adjustment is easy with range screw located inside conduit enclosure. Internal location helps prevent tampering. UL, CE, CSA listed, and FM approved.

SPECIAL MODELS AND ACCESSORIES

MANUAL RESET MODEL 1900 MR includes special snap switch which latches on pressure increase above the setpoint. Switch must be manually reset after pressure drops below the setpoint. To order, change base model to 1900 and add MR suffix after range number. Example: 1900-10-MR. Available on -1, -5,-10 or -20 ranges only. Option is not UL, CSA or FM listed

A-399 Duct Pressure Monitor Kit — For use with standard or manual reset model switches. Includes mounting flange, tubing and adapters

A-329 Street Ell — Brass adapter for applications requiring right angle connections. Two required for differential pressures

Weatherproof Housing

16 ga. steel enclosure with gasketed cover (NEMA 4, IP66) for wet or oily conditions. Withstands 200 hour salt spray test. Wt. 5 lbs. (2.3 kg). Switch must be factory installed. Change 1910 base number to 1911 and add -WP suffix. Example: 1911-1-WP.

Explosion-Proof Housing

Cast iron base with brass cover. Rated Class I, Div. 1 & 2, Groups D; Class II, Div. 1 & 2, Groups E,F,G; Class III and NEMA 7, 9 NEMA 3. (7 lbs). Switch must be factory installed. Change model to 1911 and add -EXPL suffix. Example: 1911-1-EXPL.

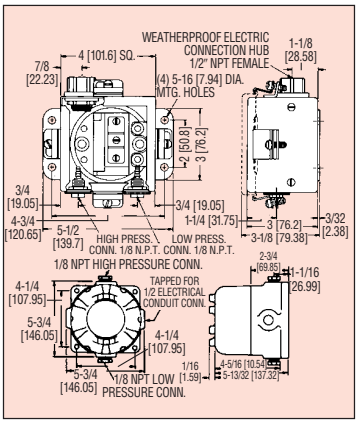

SPECIFICATIONS

Service: Air and non-combustible, compatible gases.
Wetted Materials: Consult Factory.
Temperature Limits: -30 to 180°F (-34 to 82.2°C).
Pressure Limits: 45˝ w.c. (11.2 kPa) continuous, 10 psig (68.95 kPa) surge.
Switch Type: Single-pole double-throw (SPDT).
Repeatability: ±3%.
Electrical Rating: 15 A @ 120-480 VAC, 60 Hz. Resistive 1/8 HP @125 VAC, 1/4 HP @ 250 VAC, 60 Hz. Derate to 10 A for operation at high cycle rates.
Electrical Connections: 3 screw type, common, normally open and normally closed.
Process Connections: 1/8˝ female NPT.
Mounting Orientation: Diaphragm in vertical position. Consult factory for other position orientations.
Set Point Adjustment: Screw type inside conduit enclosure.
Weight: 1lb, 4.5 oz (581 g).
Agency Approvals: CE , UL, CSA, FM.

CAUTION: FOR USE ONLY WITH AIR OR COMPATIBLE GASES.

ATEX (Approval Pending) Housing, Model 1911- CN. Explosion-proof housing, EExd II B T6 IP6S. Change base number to 1911 and add -CN suffix.
Example: 1911-1-CN.

SERIES 1910 SWITCHES — STOCKED MODELS OPERATING RANGES, DEADBANDS

Model Number	Operating Range, Inches W.C.	Approximate Dead Band	
		At Min. Set Point	At Max. Set Point
1910-00	0.07 to 0.15	0.04	0.04
1910-0	0.15 to 0.55	0.10	0.10
1910-1	0.40 to 1.6	0.15	0.16
1910-5	1.40 to 5.5	0.30	0.30
1910-10	3.0 to 11.75	0.40	0.40
1910-20	4.0 to 20.0	0.40	0.50

Dwyer Instruments, Inc./P.O. Box 373/Michigan City, IN 46361/Phone 219 879-8000/Fax 219 872-9057 • U.K. Phone (+44) (0)1494-461707 • Australia Phone 61 2 4272-2055

152
Aug.02, 2006

STANDARD FILTER HOUSINGS

- **Ideal for a wide range of applications, including residential, commercial and industrial**
- **Available in 10" and 20" sizes to meet your needs**
- **Optional pressure-relief/bleed button on inlet side of cap**
- **Thick walls for increased strength**
- **Leak-proof sealing with top-seated Buna-N O-ring**
- **Available with clear and blue sumps**

Standard filter housings are manufactured of a durable polypropylene or clear Styrene-Acrylonitrile (SAN). All are equipped with 3/4" NPT inlet and outlet ports.

Reinforced polypropylene housings have excellent chemical resistance and are ideal for many residential, commercial and industrial applications. Clear sumps are manufactured from a clear, FDA-compliant Styrene-Acrylonitrile (SAN) and offer on-site examination of the cartridge.

Standard filter housings are available in both 10" and 20" lengths and will accommodate a wide range of 2½" to 2⅞" diameter cartridges.

PENTEK FILTRATION

Pure Quality.™

STANDARD
Filter Housings

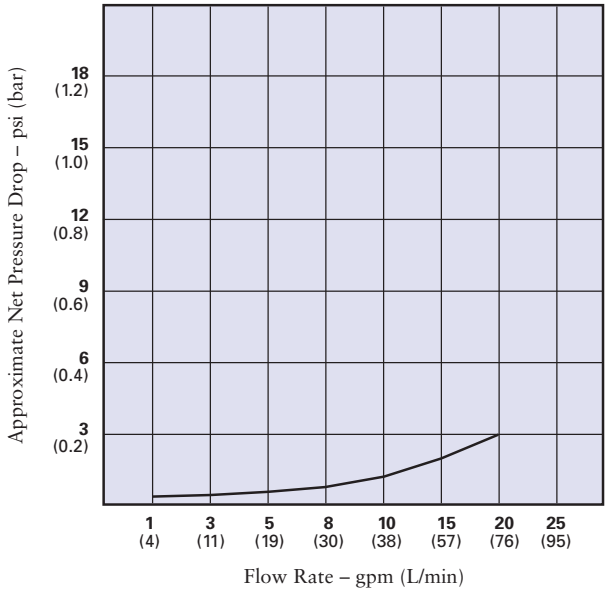

NSF. COMPONENT

The 150001, 150002, 150067, 150068, 150071, 150072, 150435 and 150436 are Tested and Certified by NSF International to NSF/ANSI Standard 42 for material and structural integrity requirements only.

Housing Specifications and Performance Data

Model	Maximum Dimensions	Initial ΔP (psi) @ Flow Rate (gpm)
#10 Blue	12-1/4" x 5-1/8" (311 mm x 130 mm)	1 psi @ 10 gpm (0.1 bar @ 38 L/min)
#10 Clear	12-5/8" x 5-1/4" (321 mm x 133 mm)	1 psi @ 10 gpm (0.1 bar @ 38 L/min)
#20 Blue	22-3/8" x 5-1/8" (568 mm x 130 mm)	1 psi @ 10 gpm (0.1 bar @ 38 L/min)

Materials of Construction

- **Housing** — Polypropylene (Blue), Styrene Acrylonitrile (Clear)
- **Cap** — Reinforced Polypropylene
- **Button Assembly** — 300-series Stainless Steel, EPDM and Polypropylene
- **O-Ring** — Buna-N
- **Maximum Temperature** — 125°F (51.7°C)
- **Maximum Pressure** — 125 psi (8.62 bar)

CAUTION: Protect against freezing to prevent cracking of the filter and water leakage.

PENTEK FILTRATION

ISO-9001 REGISTERED MANUFACTURER

502 Indiana Avenue • P.O. Box 1047 • Sheboygan, Wisconsin 53082-1047
Customer Service: 800-645-0267 • Fax: 888-203-7361 • supportspecialist@pentekfiltration.com
International: 920-457-9435 • Fax: 920-457-2417 • international@pentekfiltration.com
www.pentekfiltration.com

Pentair Water Treatment

© 2004 Pentair Water Treatment

Printed in U.S.A. 01/04 310051

Pall Corporation

CLARIS® Series Filter Cartridges

High Consistency Polypropylene Melt Blown Cartridge

- Graded Pore Structure Enhances Dirt Holding Capacity
- E-core, an Extruded Fibrous Core, Provides Excellent Strength
- Unique Proprietary Process
- Easy and Safe Cartridge Incineration and Disposal
- All Polypropylene Construction
- Free of Surfactants, Binders, and Adhesives
- NSF Certified
- Plastic and Metal Spring Assembly End Configurations Available

Performance Specifications

Filter Grades:
1, 3, 5, 10, 20, 30, 50, 75 µm

Maximum Differential Pressure:
50 psid (3.45 bar) @ ambient
25 psid (1.72 bar) @ 140˚F (60˚C)

Recommended Change Out Differential Pressure[1]:
35 psid (2.4 bar)

FDA Listed Materials:
Manufactured from materials, which are listed for food contact applications in Title 21 of the U.S. **Code of Federal Regulations**. Product in compliance with EU Directive 2002/72/EC for plastic in food contact (in stimulants A, B, C and D).

Toxicity:
All polypropylene components meet the specifications for biological safety as per the **USP** for Class VI-121˚C plastics (gaskets/O-rings excluded).

Purity:
Claris Series filter cartridges are free of surfactants, anti-static agents, binders, and adhesives.

Product Specifications

Materials of Construction:

Filter Media:	Polypropylene
End Caps[2]:	Polypropylene
Extended Core[2]:	Stainless Steel
Extruded Core:	Polypropylene
Gaskets/O-rings[2]:	Silicone Elastomer, Buna N, Viton[3] A, EPDM, Santoprene[4]

Dimensions (nominal):

Outside Diameter:	2 ½" (6.4 cm)
Inside Diameter:	1" (2.7 cm)
Lengths:	9 ¾" (24.8 cm), 9 ⅞" (25.1 cm), 10" (25.4 cm), 19 ½" (49.5 cm), 19 ⅘" (50.3 cm), 20" (50.8 cm), 29 ¼" (74.3 cm), 29 ½" (74.9 cm), 29 ¾" (75.6 cm), 30" (76.2 cm), 39" (99.1 cm), 40" (102 cm), 50" (127 cm)

NSF
COMPONENT

This Claris Series filter cartridge is tested and Certified by NSF International under ANSI/NSF Standard 42 for materials only.

[1] - Provided that the maximum differential pressure is not exceeded based on temperature limits defined above.

[2] - These components are not NSF certified.

[3] - Registered trademark of DuPont Dow.

[4] - Registered trademark of Advanced Elastomer Systems.

Typical Flow vs. Differential Pressure for Application Sizing

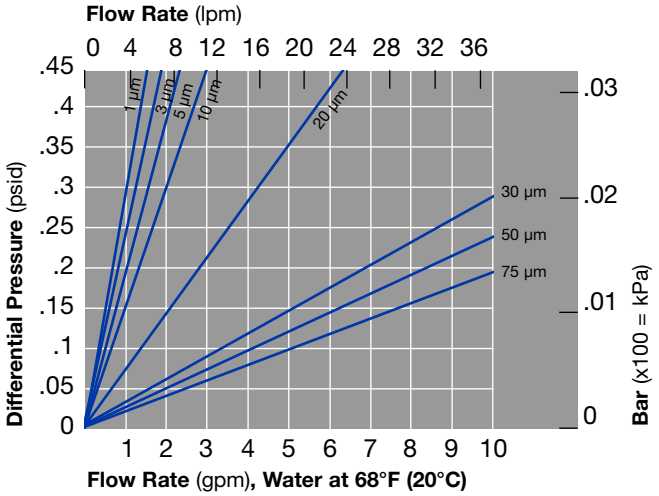

Flow rate is per 10" (25.4 cm) cartridge. For liquids other than water, multiply differential pressure by fluid viscosity (cP).

Part Numbers/Ordering Information

CLR ■ – ● ▼ ◆ (e.g. CLR 3–20DOES)

Code ■	Filter Grades[5]
1	1 µm
3	3 µm
5	5 µm
10	10 µm
20	20 µm
30	30 µm
50	50 µm
75	75 µm

Code ●	Cartridge Lengths (nominal)
9.75	9.75"
9.875	9.875"
10	10"
19.5	19.5"
19.8	19.8"
20	20"
29.25	29.25"
29.5	29.5"
29.75	29.75"
30	30"
39	39"
40	40"
50	50"

Code ▼	End Configurations
Blank	DOE industrial (no end caps)
DOE	DOE with elastomer gasket seals & end caps
H21	DOE, Santoprene gasket seal
1X	DOE industrial, 1" (2.54 cm) stainless steel extended core
M3	SOE flat closed end, external 222 O-rings (retrofits other manufacturers' Code 0)[6]
M8	SOE fin end, external 222 O-rings (retrofits other manufacturers' Code 5)[6]
M18	SOE flat closed end, external 222 O-ring
XK	SOE plastic spring assembly, saw cut end
SI	SOE metal spring/polypropylene cap, saw cut end

Code ◆	Gasket/O-ring Materials
S	Silicone
N	Buna N
E	EPDM
V	Viton A

[5] - Based on typical application usage.

[6] - For details, contact Pall Corporation.

Pall Corporation

2200 Northern Boulevard
East Hills, New York 11548-1289

1.800.FILTERS toll free
516.484.5400 phone
516.484.3216 fax
information@pall.com e-mail

Visit us on the Web at www.pall.com

Pall Corporation has offices and plants throughout the world in locations including: Argentina, Australia, Austria, Belgium, Brazil, Canada, China, France, Germany, Hong Kong, India, Indonesia, Ireland, Italy, Japan, Korea, Malaysia, Mexico, the Netherlands, New Zealand, Norway, Poland, Puerto Rico, Russia, Singapore, South Africa, Spain, Sweden, Switzerland, Taiwan, Thailand, United Kingdom, United States, and Venezuela. Distributors are located in all major industrial areas of the world.

© Copyright 2004, Pall Corporation. Pall, PALL and Claris are trademarks of Pall Corporation. ® Indicates a Pall trademark registered in the USA. *Filtration. Separation. Solution.SM* is a service mark of Pall Corporation.

Bulletin #1251-8C 8/04 5M ASP

#10 Big Blue®

#20 Big Blue®

BIG BLUE® FILTER HOUSINGS

- **Large capacity housing suitable for high flow applications**
- **Available in 10" and 20" sizes to meet your needs**
- **Optional pressure relief/bleed on inlet side of cap**
- **Accepts 4½" diameter cartridges**

Big Blue® filter housings offer the versatility to meet all of your large-capacity filtration needs, including high-flow and heavy-sediment applications. The extra large housing allows for greater cartridge capacity, reducing the number of vessels required for high flow-rate applications. Sumps are constructed of durable reinforced polypropylene and are available in both 10" and 20" lengths.

The high-flow polypropylene (HFPP) cap is available with 3/4", 1" or 1½" NPT inlet and outlet ports. The 1¼" internal port allows a greater volume of liquid to pass through the HFPP cap more rapidly.

Big Blue® housings are compatible with a broad range of chemicals and are available with or without an optional pressure relief button. They accept a wide variety of 4½" diameter cartridges in either 10" or 20" lengths.

PENTEK™ FILTRATION

Pure Quality.™

BIG BLUE®

Filter Housings

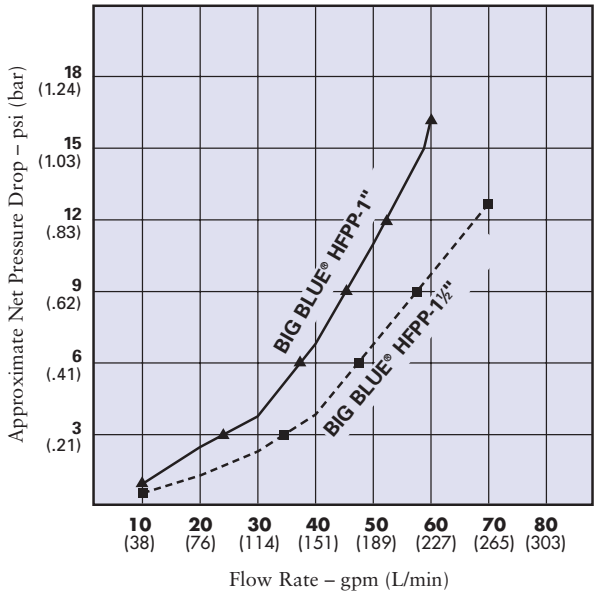

NSF. COMPONENT

The 150233, 150234, 150235, 150236, 150237, 150238, 150239, 150240, 150467 and 150469 are Tested and Certified by NSF International to NSF/ANSI Standard 42 for material and structural integrity requirements only.

Housing Specifications and Performance Data

Model	Maximum Dimensions	Initial ΔP (psi) @ Flow Rate (gpm)
10" BB–3/4"	13-1/8" x 7-1/4" (333 mm x 184 mm)	2 psi @ 15 gpm (0.1 bar @ 57 L/min)
10" BB–1"	13-1/8" x 7-1/4" (333 mm x 184 mm)	1 psi @ 15 gpm (0.1 bar @ 57 L/min)
10" BB–1-1/2"	13-5/8" x 7-1/4" (346 mm x 184 mm)	1 psi @ 20 gpm (0.1 bar @ 76 L/min)
20" BB–3/4"	23-3/8" x 7-1/4" (594 mm x 184 mm)	2 psi @ 15 gpm (0.1 bar @ 57 L/min)
20" BB–1"	23-3/8" x 7-1/4" (594 mm x 184 mm)	1 psi @ 15 gpm (0.1 bar @ 57 L/min)
20" BB–1-1/2"	23-7/8" x 7-1/4" (606 mm x 184 mm)	1 psi @ 20 gpm (0.1 bar @ 76 L/min)

Materials of Construction

- **Housing** Polypropylene
- **Cap** Polypropylene (HFPP)
- **Button Assembly** 300-series Stainless Steel, EPDM and Polypropylene
- **O-Ring** Buna-N
- **Maximum Temperature** 100˚F (37.8˚C)
- **Maximum Pressure** #10BB – 100 psi (6.9 bar) #20BB – 90 psi (6.2 bar)

CAUTION: Protect against freezing to prevent cracking of the filter and water leakage.

PENTEK FILTRATION

ISO-9001 REGISTERED MANUFACTURER

502 Indiana Avenue • P.O. Box 1047 • Sheboygan, Wisconsin 53082-1047
Customer Service: 800-645-0267 • Fax: 888-203-7361 • supportspecialist@pentekfiltration.com
International: 920-457-9435 • Fax: 920-457-2417 • international@pentekfiltration.com
www.pentekfiltration.com

Pentair Water Treatment

© 2004 Pentair Water Treatment

Printed in U.S.A. 01/04 310053

1″ Dial Size Pocket Bi-Metal

- 5″ stem length
- .142″ stem diameter
- Complete with pocket case and clip
- Standard with plastic crystal and recalibration feature.

CATALOG NUMBER	STANDARD RANGES
1R05A	40 to 160°F in 2° divs.
1R05B	25 to 125°F in 1° divs.
1R05C	0 to 220°F in 2° divs.
1R05D	50 to 550°F in 5° divs.
1R05E	-50 to 100°C in 2° divs.
1R05F	-10 to 110°C in 2° divs.
1R05G	0 to 150°C in 2° divs.
1R05H	0 to 250°C in 5° divs.

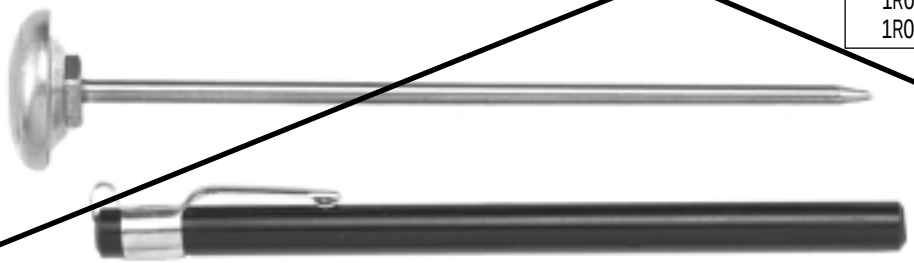

MODEL 1R05

2″ Dial Size

MODEL 2R08

MODEL 2T02

STANDARD FEATURES

- All Stainless Steel Construction
- Accurate to ± 1% of Scale Range
- Dual Scale (Both °F and °C) Ranges

CATALOG NUMBER	DUAL SCALE (BOTH °F AND °C) FAHRENHEIT ON OUTER – CELSIUS ON INNER SCALE	TYPE
2R08A	-40 to 160°F in 2° divs. and -40 to 72°C in 1° divs.	8″ Plain Stem With Recalibration Feature
2R08B	25 to 125°F in 1° divs. and -4 to 52°C in ½° divs.	
2R08J	0 to 180°F in 2° divs. and -18 to 83°C in 1° divs.	
2R08C	0 to 220°F in 2° divs. and -18 to 105°C in 1° divs.	
2R08K	50 to 400°F in 5° divs. and 10 to 106°C in 2° divs.	
2R08D	50 to 550°F in 5° divs. and 10 to 290°C in 5° divs.	
2T02A	-40 to 160°F in 2° divs. and -40 to 72°C in 1° divs.	2½″ Stem 1/4 NPT Fixed Thread
2T02C	0 to 220°F in 2° divs. and -18 to 105°C in 1° divs.	
2T04A	-40 to 160°F in 2° divs. and -40 to 72°C in 1° divs.	4″ Stem 1/4 NPT Fixed Thread
2T04B	25 to 125°F in 1° divs. and -4 to 52°C in ½° divs.	
2T04C	0 to 220°F in 2° divs. and -18 to 105°C in 1° divs.	

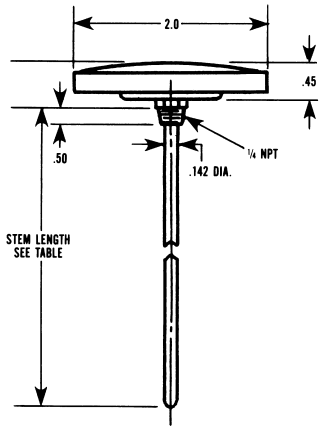

MOUNTING DIMENSIONS
TYPE 2T

HOW TO ORDER

SPECIFY 5 DIGIT CATALOG NUMBER FROM ABOVE TABLES.

Custom Metal Sheath Thermocouples

ALLTEMP SENSORS

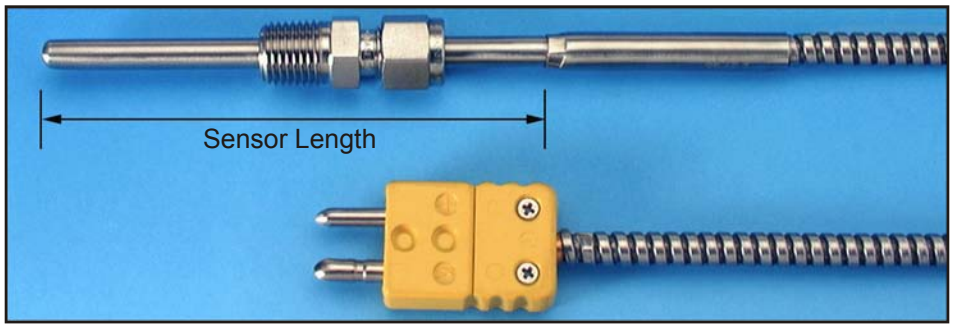

Step 1:

Code	Termination
BE-	Bare End 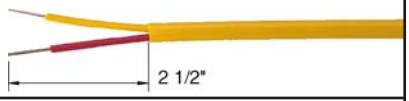
SM-	Standard Male Plug
SF-	Standard Female Jack
HSM-	High Temp Standard Male Plug
HSF-	High Temp Standard Male Jack
MM-	Mini Male Plug
MF-	Mini Female Jack
HMM-	High Temp Mini Male Plug
HMF-	High Temp Mini Female Jack
SPL-	Spade Lugs (uncompensated)
SP-	Special (specify)

Step 2:

Code	Lead Insulation
F-	Fiberglass (482°C*)
P-	Polyvinyl Chloride (PVC)(105°C*)
T-	Teflon (204°C*)
AF-	Armoured Fiberglass (482°C*)
AP-	Armoured Polyvinyl Chloride (105°C*)
AT-	Armoured Teflon (204°C*)
TAF-	Teflon Coated Armour over Fiberglass (204°C*)
TAT-	Teflon Coated Armour over Teflon (204°C*)
PAP-	PVC Coated Armour over PVC (105°C*)
SSF-	Braided SS over Fiberglass (482°C*)
SSP-	Braided SS over Polyvinyl Chloride (105°C*)
SST-	Braided SS over Teflon (204°C*)
SP-	Special (specify)
X-	No Leadwire Required
*=Maximum Temperature Rating	

Step 3:

Leadwire Length in inches

Step 4:

Code	Process Fitting
FX-	Fixed
AS-	Adjustable (Stainless steel ferrule)
AT-	Adjustable (Teflon ferrule)
SL-	Spring Loaded Fitting Available in 1/2" NPT or 3/4" NPT for 3/16", 1/4" & 6mm Sensors Only
SP-	Special (specify)
X-	No Fitting Required

Custom Metal Sheath Thermocouples

Step 5:

Code	Fitting Size
16-	1/16” NPT
18-	1/8” NPT
14-	1/4” NPT
12-	1/2” NPT
34-	3/4” NPT
X-	No Fitting Required
SP-	Special (specify)

Step 6:

Code	Sheath Material
R	316 SS
P	304 SS
J	Inconel 600
Q	310 SS
SP-	Special (specify)

Step 7:

Code	Sensor Diameter
01	1/100 inch (.010)(not avail. in dual)
02	1/50 inch (.020)(not avail. in dual)
04	1/25 inch (.040)(not avail. in dual)
16	1/16 inch (.063)
18	1/8 inch (.125)
36	3/16 inch (.188)
14	1/4 inch (.250)
38	3/8 inch (.375)
12	1/2 inch (.500)
SP-	Special (specify)

Step 8:

Code	Junction
G	Grounded
U	Ungrounded
DG	Dual Grounded
DU	Dual Ungrounded
E	Exposed

Step 9:

Code	Thermocouple Type
J	Iron - Constantan
K	Chromel - Alumel
T	Copper - Constantan
E	Chromel - Constantan
N	Nicrosil - Nisil
For Special Limits add suffix - SL, eg. JSL, KSL.	

Step 10:

Sensor Length in Inches

Step 11:

Code	Options
NBN	90° Bend, specify “Y” 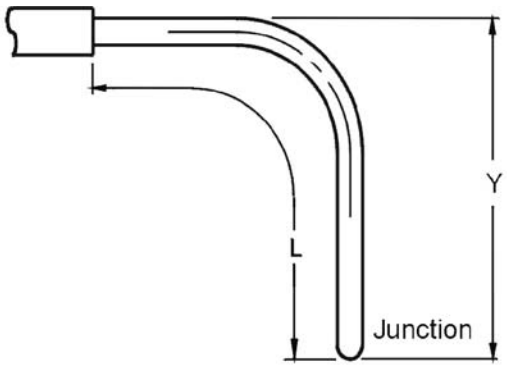
SR	Strain Relief Spring (not available with armour)
RC	Retractable Cord (not available with armour)
ILT	Inline Transition (3/16” OD and up) 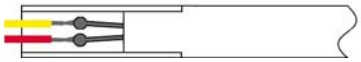

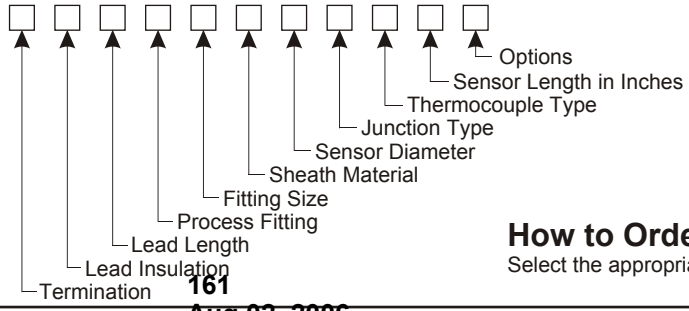

How to Order

Select the appropriate symbol from each of the tables listed.

PLAST-O-MATIC

PRODUCT DATA

CATALOG PRH

New! Thermoplastic Pressure Regulator Permits Downstream Pressure Settings up to 125 PSI!

Designed for Higher Flow Capacities, and... Achieved with Less System Pressure Loss!

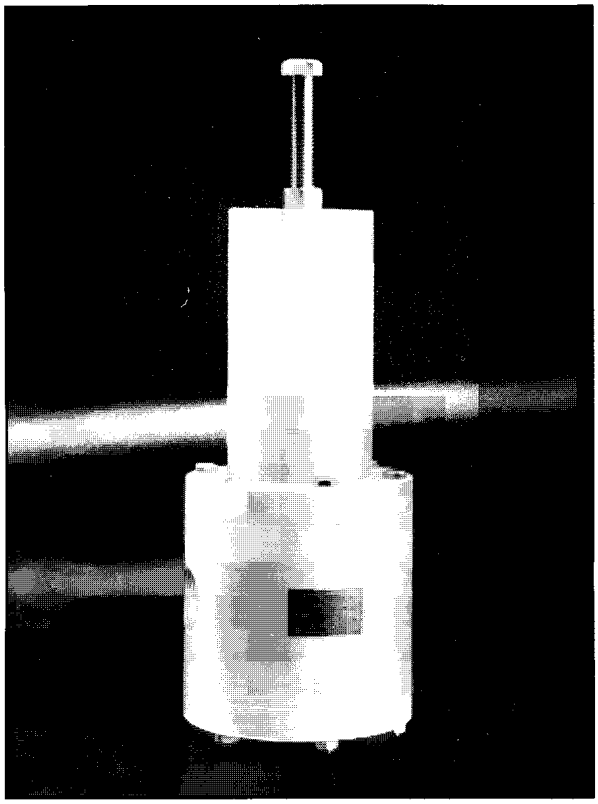

Superior Features of Series PRH Regulator:

- Converts varying inlet pressure up to 150 PSI, to a stabilized, lower pre-set downstream pressure.
- This protects sensitive downstream instruments, tubing & filters against damage from overpressure/pressure surges; permits the entire system to operate safely and effectively.
- Downstream pressure settings adjustable from 30 PSI to 125 PSI.
- Large surface area of its frictionless rolling diaphragm provides exceptional sensitivity.
- Free movement of the diaphragm on a balanced shaft assures smooth accurate performance and reliable sealing for millions of cycles.
- Double U-cups prevent leakage along the shaft and eliminates the possibility of "creep."
- For corrosive and ultra-pure liquid applications.
- Sizes: l/4", l/2", 3/4", l", l-1/2", 2" & 3".

Materials of Construction & Piping Connections:

The standard connections are female **NPT** threaded ports. Socket, flanged and spigot connections are also available. Standard body materials are PVC, Natural Polypropylene, Teflon@ PTFE and Kynar® PVDF. Standard seal materials are Viton®, EPDM and Buna-N. Some Kynar PVDF components are used in the Natural Polypropylene and Teflon models for strength.

Pressure Regulator Selection:

In the selection of a liquid pressure regulator, flow capacity with minimum system pressure loss are critical criteria, but it should be recognized that all similar-size competitive regulators do not provide similar performance levels. The new Series PRH regulators provide not only higher set pressures and flow capacities with each model, but these are achieved with less pressure losses than with similar size competitive regulators. These lower pressure drop-offs can be seen from the performance curve charts shown on the next page.

1364 Pompton Ave., Cedar Grove, NJ 07009-1095 (973) 256-3000 • Fax: (973) 256-4745
• www.plastomatic.com

Series PRH Pressure Regulator

DESIGN:

Plast-0-Matic Series PRH Pressure Regulators are designed to handle corrosive and ultra-pure liquids with inlet pressures up to 150 PSI at 75°F. Standard downstream set pressure range is 30 to 125 PSI. The normally-open regulators incorporate a poppet seat at the valve orifice to prevent sticking and affecting the sensing of the downstream line pressure. Also, one piece body construction and dual U-cup shaft seals help to eliminate internal leakage that could cause the set pressure to creep beyond a safe limit. A unique, large-surface, rolling diaphragm seal isolates the spring chamber from downstream pressure sensing liquid. This unique design, in conjunction with a pressure balanced shaft, assures smooth performance and stable control. **CAUTION:** Avoid quick closing valves downstream of a regulator to eliminate "water hammer" shock that can cause breakage.

OPERATION:

Series PRH pressure regulators prevent downstream pressure from exceeding the desired set pressure. Regulator will remain closed as long as set pressure is maintained. As equipment or valves downstream of the regulator begin to open and demand flow, the downstream pressure begins to fall and the regulator begins to open. As valves or equipment downstream open further, the pressure regulator continues to open until its maximum opening is reached. As the process is reversed, downstream pressure begins to increase and the regulator starts closing. When the downstream pressure again reaches set pressure the regulator closes bubble-tight. **IMPORTANT:** It should be noted from the preceding explanation that a pressure regulator does not maintain a specific downstream pressure, but only prevents the downstream pressure from exceeding a set point.

TYPICAL PERFORMANCE CURVES OF FLOW vs. DROP-OFF FROM SET PRESSURE

Drop-off is the difference between the pressure regulator set pressure and the downstream pressure. Performance curves chart at right identifies the high flow capacities and the low pressure drop-off of Plast-0-Matic regulators which result in their greater sensitivity, finer adjustability and superior accuracy as compared to competitive models.

TYPICAL 3/4" PRESSURE REGULATOR PERFORMANCE CURVES
FLOW CAPACITY (GPM) vs. PRESSURE DROP-OFF (PSI).
COMPARISON OF REPRESENTATIVE PLAST-0-MATIC MODELS WITH COMPETITORS "A", "B" & "C"

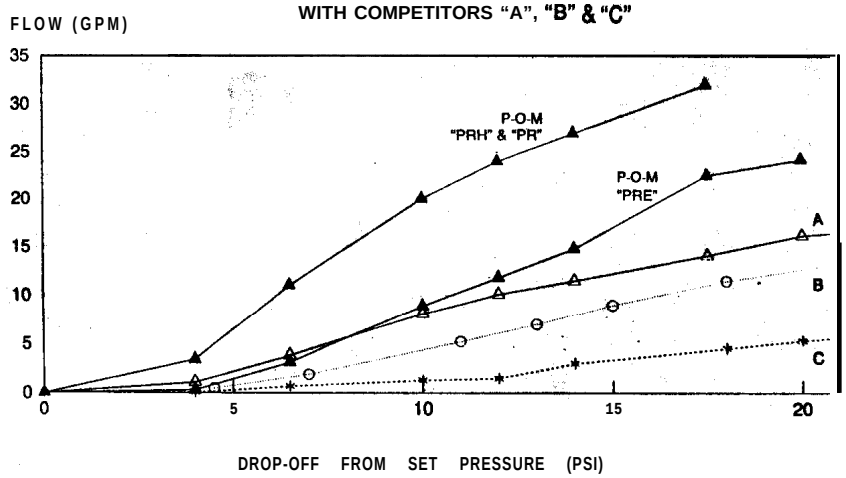

DIMENSIONS:

SERIES PRH PRESSURE REGULATOR DIMENSIONS

DIM		SIZE NPT or BSP						
		1/4	1/2	3/4	1	1 1/2	2	3
A	inch	2	2 1/2	2 7/8	2 7/8	2 7/8	2 7/8	5 1/4
	mm	51	64	73	73	73	73	133
B	inch	1 3/8	1 1/16	15/16	15/16	15/16	15/16	4
	mm	35	27	24	24	24	24	102
C	inch	4 1/4	4	7 1/2	7 1/2	8	9 3/8	11 5/8
	mm	108	102	195	195	203	238	295
D	inch	1 1/4	2	2 13/16	2 7/8	3 3/8	5 1/8	6 3/8
	mm	32	51	71	73	86	130	162
E	inch	2	2 1/2	4 1/2	4 1/2	5	7	8
	mm	51	64	114	114	127	178	203

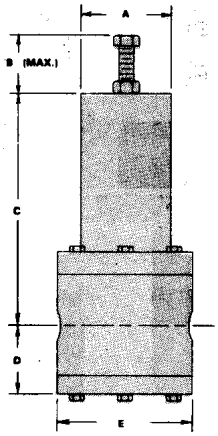

SERIES PRH
MODEL NUMBERS & MAXIMUM FLOW RATES

VALVE SIZE	MODEL NUMBERS BUNA-N Seals	MODEL NUMBERS Viton® Seals	FLOW RATES (GPM)*
1/4"	PRH025B	PRH025V	5
1/2"	PRH050B	PRH050V	10
3/4"	PRH075B	PRH075V	35
1"	PRH100B	PRH100V	50
1 1/2"	PRH150B	PRH150V	70
2"	PRH200B	PRH200V	100
3"	PRH300B	PRH300V	200

For EPDM seals change "B" (or "V") to "EP"
*Maximum Recommended

NOTE: Refer to Catalog PR & PRE for information on other Plast-0-Matic pressure regulator models.

PLAST-®-MATIC
VALVES, INC.
1364 Pompton Ave., Cedar Grove, NJ 07009-1095
(973) 256-3000 • Fax: (973) 256-4745
www.plastomatic.com

163
August 2, 2006

AUTHORIZED PLAST-0-MATIC DISTRIBUTOR

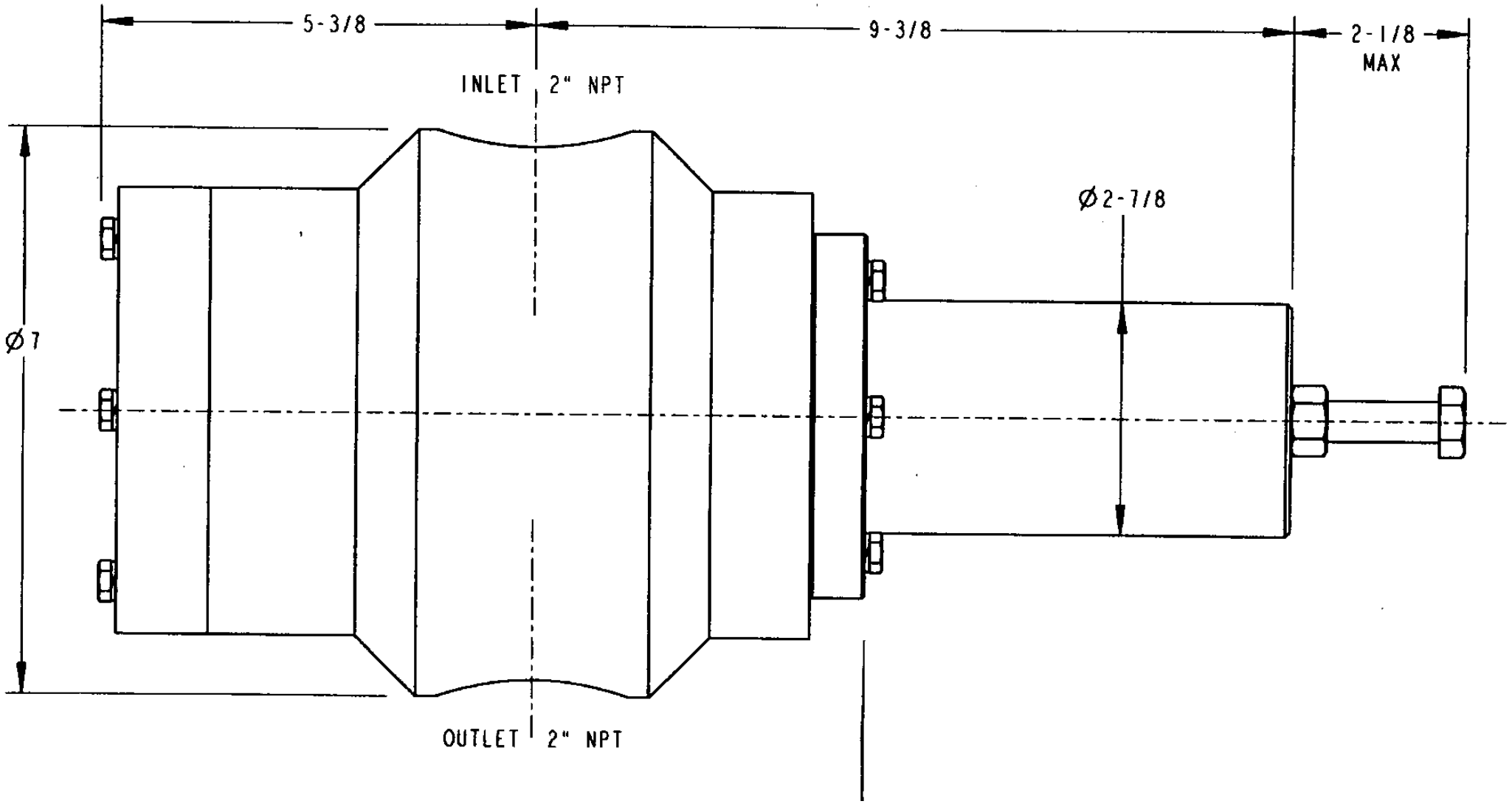
5-3/8
9-3/8
2-1/8
MAX
INLET 2" NPT
Ø2-7/8
Ø7
OUTLET 2" NPT

Section
9

EQUIPMENT & PIPING LAYOUT

REV	DATE	DESCRIPTION	BY DRAWN	CHECKED BY	APPROVED BY
0	08/02/06	ISSUED FOR APPROVAL	CM	JPM	
1	01/08/07	UPDATED & ITEMS ADDED PER CUSTOMER INPUT	JMP	JPM	

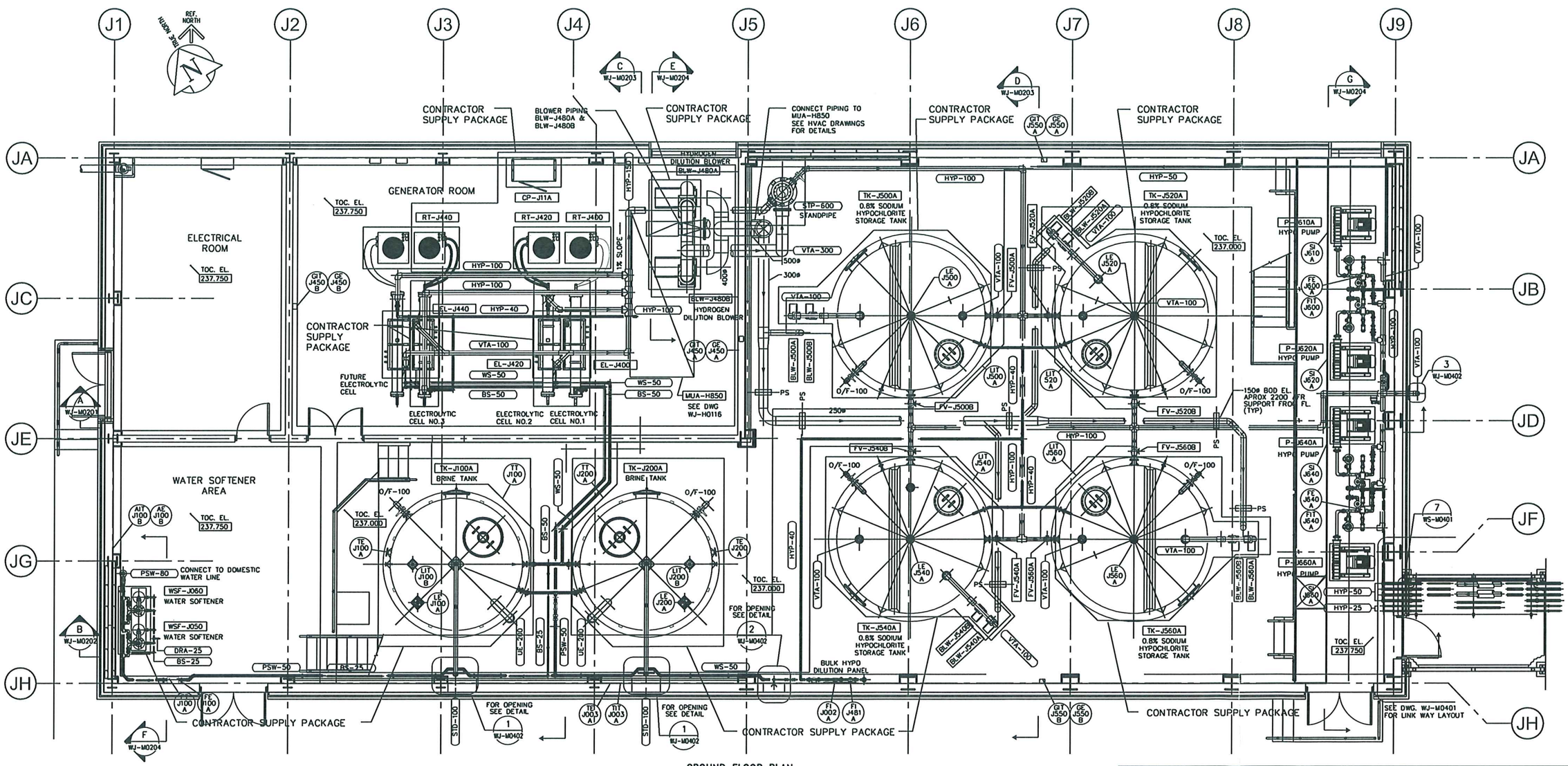

GROUND FLOOR PLAN
1:50

NOTES:
1. 600mm ø FRP STAND PIPE. SECURE TO NORTH AND WEST WALLS OF HYPO TANK AREA.
2. BLOWER PIPING INSTALLATION INCLUDES CONNECTION TO BLOWERS SUPPLIED IN CONTRACTOR SUPPLY PACKAGE.

SCALE 1:50 METRES 0 1 2 3 4 5
SCALE 1:1 MILLIMETRES 0 20 40 60 80 100

APEGM
Certificate of Authorization
CH2M HILL Canada Ltd.
No. 1441 Expiry: April 30, 2007

PRELIMINARY
NOT FOR CONSTRUCTION

SEVERN TRENT SERVICES
CLORTEC
2660 COLUMBIA STREET, CALIFORNIA 90503
TELEPHONE No: (310) 618-9700
FAX No: (310) 618-9339
E-MAIL:
WEB SITE: www.severntrentservices.com

UNLESS OTHERWISE NOTED
TOLERANCES:

TYPE:	INCHES	[MM]
FRACTIONS	± 1/8"	
.X	± .1"	± 2.5
.XX	± .02"	± .51
.XXX	± .005"	± .127
ANGLES	± 1°	

NOTICE OF CONFIDENTIALITY
THIS DOCUMENT CONTAINS PROPRIETARY INFORMATION THAT IS AND SHALL REMAIN THE PROPERTY OF CLORTEC AND IS TO BE RETURNED IMMEDIATELY UPON REQUEST. ITS CONTENTS MAY NOT BE REPRODUCED, DISTRIBUTED, CIRCULATED, OR DISCLOSED TO THIRD PARTIES. RECIPIENT WILL NOT USE THIS INFORMATION FOR PURPOSES OTHER THAN INTENDED WITHOUT PRIOR WRITTEN CONSENT OF CLORTEC.

CITY OF WINNIPEG
WATER TREATMENT PLANT

(X3) CT-1500 (680Kgs/Day)
RACKS ON-SITE HYPOCHLORITE GENERATOR SYSTEM
EQUIPMENT & PIPING LAYOUT

SCALE:	CLORTEC JOB No:	SIZE:	REV:
1:96	CPG0465	B	1
DWG No: CPG0465-ML-01		SHEET: 1 OF 1	

Earth Tech (Canada) Inc.

Reviewed for general conformance with design intent. Responsibility for detailed design in the shop drawings rests with the Contractor.

Responsibility for verification and correlation of field dimensions, fabrication process, techniques of construction, installation and coordination of all parts of the work rests with the Contractor.

REVIEWED ✓

REVIEWED AS MODIFIED

REVISE AND RE-SUBMIT

NOT REVIEWED

Project No. 79538-C28-16

Date: 31/1/07 By: M. Jackson

DESIGN DATA

TANK CONTENTS:	BRINE
SPECIFIC GRAVITY:	1.2
DESIGN PRESSURE	ATMOSPHERIC
WORKING PRESSURE	ATMOSPHERIC
WORKING TEMPERATURE	AMBIENT
WEIGHT EMPTY:	4500 LBS

PRECISIONEERING
303 NANTUCKET BLVD. SCARBOROUGH, ONTARIO

SHOP ORDER: TW6575-1 DATE MFD.: 2006
CUSTOMER: METCON SALES & ENGINEERING LIMITED
PURCHASE ORDER: 108075 EQUIP. NO.: TK-J200A
DESCRIPTION: 12'-0" x 15'-0" BRINE KING
WORKG. PRESS.: ATMOSPHERIC WORKG. TEMP.: AMBIENT
MATERIAL: ISOPHTHALIC

TANK NAMEPLATE

PRECISIONEERING STANDARD NAMEPLATE (FULL SIZE)

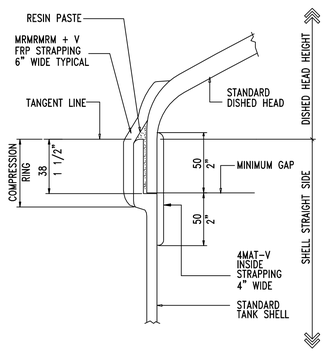

SHELL TO HEAD JOINT

STANDARD A S T M

SIZE LB.	A	B	t	T	C	D	E	F	G
3000	18"	10"	1/4"	1/4"	12"	4"	3"	1 1/2"	2"
	457	254	6	6	304	102	76	38	51

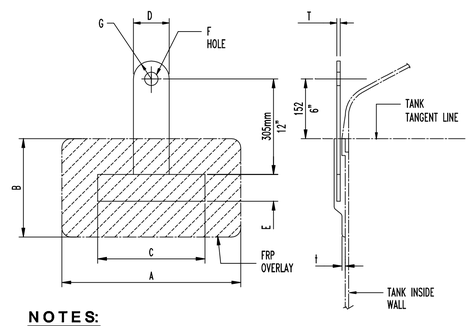

NOTES:

1. MATERIAL - 304SS
2. REMOVE ALL BURRS, SHARP EDGES AND ROUND ALL CORNERS.

STANDARD LIFTING LUG DETAIL

	tFW (AT BOTTOM)	tHLUR	tBS	tKSB
	.135	.270 3(MR)M	.120 MRM	.135 3REV
	.180	.360 4(MR)M	FOR 12' & UNDER	.180 4REV
	.225	.450 5(MR)M		.225 5REV
	.270	.540 6(MR)M	.280 3(MR)M	.270 6REV
	.315	.630 7(MR)M	FOR 13 1/2'	.315 7REV
	.360	.720 8(MR)M		.360 8REV
	.405	.810 10(MR)M		.405 9REV

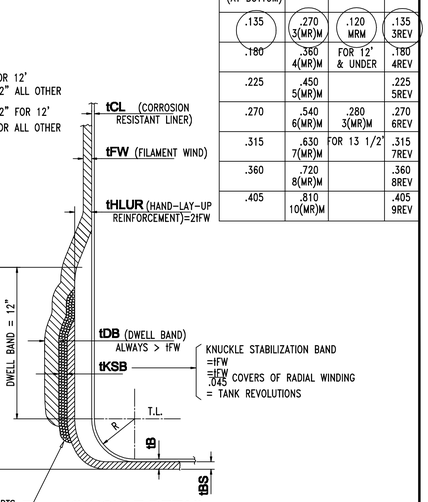

KNUCKLE DETAIL

STANDARD A S T M

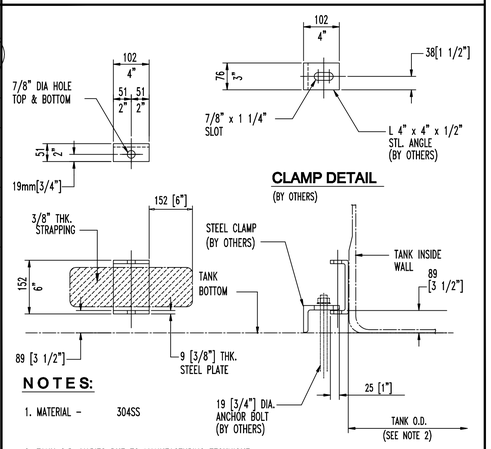

NOTES:

1. MATERIAL - 304SS
2. TANK O.D. VARIES DUE TO MANUFACTURING TECHNIQUE. DO NOT INSTALL ANCHOR BOLTS UNTIL TANK IS IN POSITION TO ENSURE PROPER ANCHOR BOLT LOCATION.

STANDARD HOLD DOWN LUG DETAIL

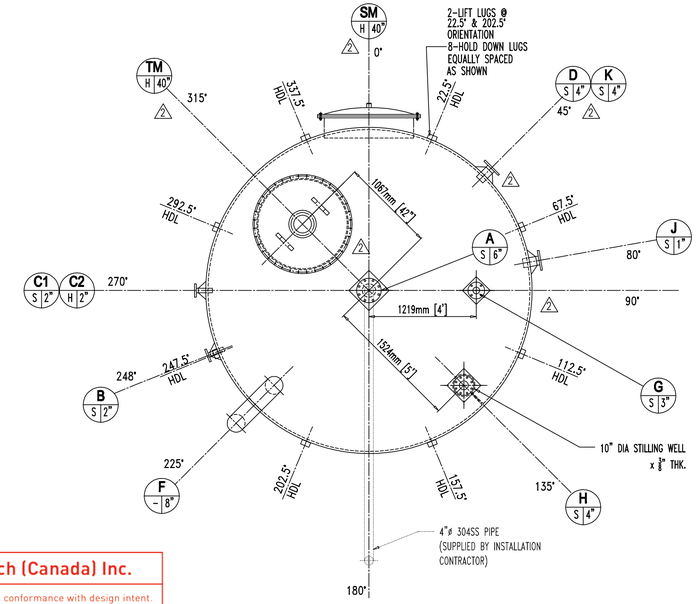

ORIENTATION PLAN

Earth Tech (Canada) Inc.

Reviewed for general conformance with design intent. Responsibility for detailed design in the shop drawings rests with the Contractor.

Responsibility for verification and correlation of field dimensions, fabrication process, techniques of construction, installation and coordination of all parts of the work rests with the Contractor.

REVIEWED
REVIEWED AS MODIFIED
REVISE AND RE-SUBMIT
NOT REVIEWED
Project No.
Date: By:

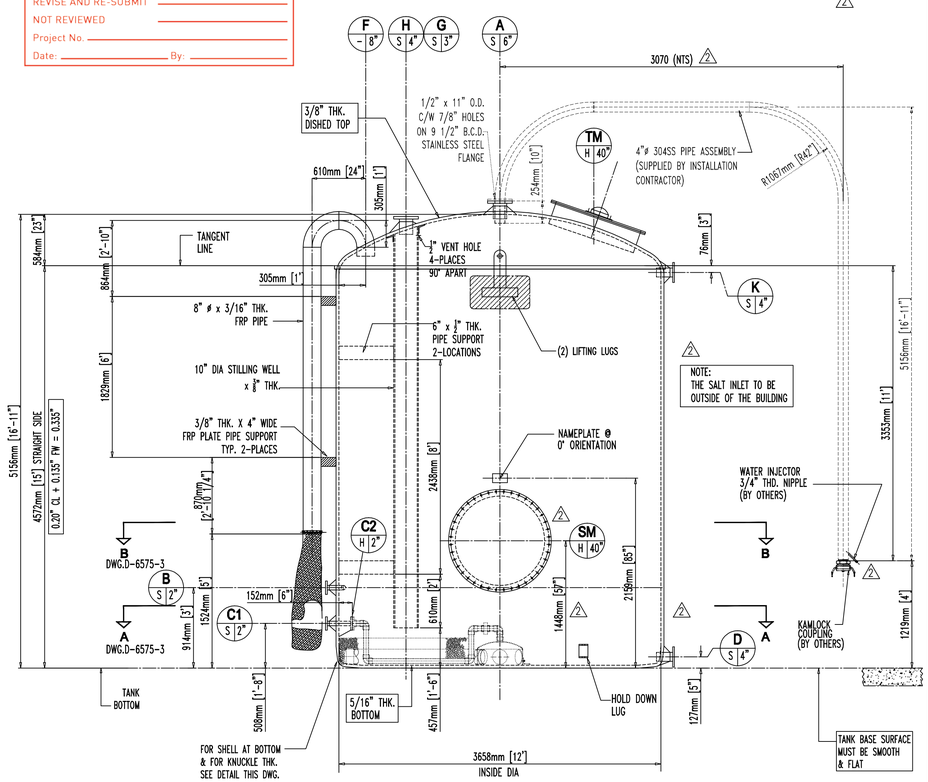

ELEVATION

ELEVATION VIEW IS FOR REFERENCE LOCATION ONLY FOR TRUE ORIENTATION REFER TO PLAN VIEWS

3/8" = 1'-0"

NOZZLE SCHEDULE

SHOP ORDER NO. TW6575-1 | DRAWING NO. D-6575-1 | REV 2

MARK	SIZE	DRILLING	RATING	CONN TYPE	NOZ PROJ	STRAP THK.	GUSSET	INTERNAL PIPE	MFG. CODE	NECK LENGTH	DESCRIPTION	Q.C. CHECK
A	150 [6"]	150 LB.	150PSI	FIG. 6	6"	1/4"	[P]	–	SPUN	8"	SALT INLET	
B	50 [2"]	150 LB.	150PSI	FIG. 6	6"	3/16"	[P]	YES	SPUN	8"	WATER INLET	
C1	50 [2"]	150 LB.	150PSI	FIG. 6	6"	3/16"	[P]	YES	SPUN	8"	BRINE OUTLET (OUTSIDE FLG.)	
C2	50 [2"]	150 LB.	150PSI	FIG. 6	6"	3/16"	[B]	YES	HLU	8"	BRINE OUTLET (INSIDE FLG.)	
D	100 [4"]	150 LB.	150PSI	FIG. 6	6"	1/4"	[P]	SCREEN	SPUN	8"	DRAIN C/W INTERNAL SCREEN	
E	deleted	2										
F	200 [8"]	PIPE	25PSI	FIG. 6	–	5/16"	–	EXTERNAL	HLU	–	VENT	
G	75 [3"]	150 LB.	150PSI	FIG. 6	–	3/16"	[P]	–	FRP	8"	SALT LEVEL SENSOR	
H	100 [4"]	150 LB.	150PSI	FIG. 6	6"	3/16"	[P]	–	SPUN	8"	BRINE LEVEL SENSOR	
J	25 [1"]	150 LB.	150PSI	FIG. 6	6"	3/16"	[P]	–	SPUN	8"	TEMP PROBE	
K	100 [4"]	150 LB.	150PSI	FIG. 6	6"	3/16"	[P]	–	SPUN	8"	OVERFLOW	
TM	1016 [40"]	DUCT	STD		–	9/16"	–	–	HLU	–	TOP MANWAY	
SM	1016 [40"]	STD	10PSI	FIG. 6	6"	7/8"	–	–	HLU	–	SIDE MANWAY	

BLIND FLANGES & COVERS

ITEM	SIZE	DRILLING	RATING	THK	DESCRIPTION	GASKET	BOLTS
1	1016 [40"]	STD	10PSI	STD	SIDE MANWAY ' SM'	1/8" NEOPRENE	304 SS
2	1016 [40"]	SEE DWG	DUCT	STD	TOP MANWAY ' TM'	1/8" NEOPRENE	304SS

NOZZLE MARK NO. — A; FLANGE MFG. CODE — S; NOZZLE SIZE — 4"

FLANGE MFG. CODE: S = SPUNCAST; H = HAND LAY UP (HLU); C = COUPLING (FRP/PVC); – = OTHERS

NOZZLE MARK

FIG. 6 — F.F. ASTM D3299 FIG. 6
FIG. 5 — F.F. ASTM D3299 FIG. 5

NOZZLE TYPE

FLANGE HOLES: BOLT HOLES STRADDLE TANK MAJOR CENTERLINES UNLESS NOTED OTHERWISE.

MATING FLANGE: FIBERGLASS FLANGES ON TANK MUST ALWAYS BE CONNECTED TO FLAT FACE FLANGES ON EXTERNAL PIPING DO NOT CONNECT TO RAISED FACE FLANGES

FLANGE BOLT TORQUE: STANDARD BOLT TORQUE FOR FIBERGLASS FLANGES

CONSTRUCTION DETAILS

CORROSION LINER REINFORCING	1-C GLASS + 4 MAT			
PRECISIONEERING RESIN CONTROL CODE (SEE NAME PLATE)	LINER	4817	COLOR	CLEAR
	STRUCTURAL	4817	COLOR	GREY
	OUTER SKIN	.	COLOR	.
SPECIFICATION	CGSB 41-GP-22 & ASTM D3299			

QUALITY CONTROL

BARCOL HARDNESS	MINIMUM	TOP HEAD	SHELL	BOTTOM
THICKNESS	TOP HEAD	SHELL	BOTTOM	MANWAY BUILT-UP

INTERIOR CLEAN

INSPECTED BY: WITNESSED BY:
DATE: DATE:
GENERAL ORIENTATION DETAILED ORIENTATION

LAMINATE SEQUENCE

THK.	HLU LAMINATE
1/4	V – 4M. 2M. H
5/16	V – 4M. M R M. H
3/8	V – 4M. 2(MR) M. H

HEAD TO SHELL JOINT: 2M+V x 4" WIDE=INSIDE; 4M+V x 4" WIDE=OUTSIDE; SEE DETAILS THIS DWG.

NOTE:
S = SYNTHETIC VEIL
V = C – GLASS VEIL
M = 1 1/2 oz CHOPPED STRAND MAT
R = WOVEN ROVING 24 OZ
H = HOT COAT

TANK REQUIREMENTS

LAMINATE LEVEL	STD.	LIFTING LUGS	YES
HYDROTEST	--	HOLD DOWN LUGS	YES
STEAM CURE	YES	PYRAMID GUSSETS [P]	YES
BPO/DMA	--	BLADE GUSSETS [B]	--
POST CURE	--	SIGHTGLASS	--
CALIBRATION SCALE	--	FRP LADDER	--
TRANSLUCENT STRIP	--	STEEL LADDER	--
SAVE CUT-OUTS	--	PLATFORM	--

- TO LIFT TANK, USE CRANE AND SPREADER BAR.
- ANGLE BETWEEN TANGENT LINE AND LIFTING CABLE MUST BE 65° OR GREATER
- IF NO SPREADER BAR AVAILABLE EXTEND CABLES MORE THAN ONE TANK DIAMETER

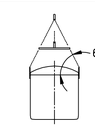

TANK HANDLING INSTRUCTIONS

READ THIS DRAWING WITH DWG. D-6575-3 & 4

CERTIFIED FOR PRODUCTION
BY:
DATE:

DO NOT SCALE THIS DRAWING USE DIMENSIONS ONLY

BY	DATE	REVISION	NO
WVI	19JAN07	LADDER DELETED, NOZZLE 'E' DELETED , SIDE MANWAY CHANGED TO 40" DIA, TOP MANWAY & NOZZLE RELOCATED AS SHOWN SALT INLET PIPING REVISED AS NOTED	2
WVI	25AUG06	REVISED PER CUSTOMER COMMENTS	1
WVI	.	ISSUED FOR CUSTOMERS APPROVAL	0

THE INFORMATION AND KNOW HOW ON THIS DRAWING ARE CONFIDENTIAL AND MAY NOT BE USED OR REPRODUCED WITHOUT WRITTEN PERMISSION OF PRECISIONEERING

DRAWN: W Inumerable
CHECKED:
DATE: 5 AUG 2006
SCALE: N T S

PRECISIONEERING
303 NANTUCKET BLVD. SCARBOROUGH ONTARIO M1P 2P2 Email sales@PRECISIONEERING.COM

FRP BRINE TANK FOR
METCON SALES & ENGINEERING LIMITED

CAD FILE NO:	SIZE	PURCHASE ORDER NO.	SHOP ORDER NO.	DRAWING NO.	REV
TW6575-1	D	108075	TW6575-1	D-6575-1	2

CUSTOMER REFERENCE DWG.: .

DESIGN DATA

TANK CONTENTS:	BRINE
SPECIFIC GRAVITY:	1.2
DESIGN PRESSURE	ATMOSPHERIC
WORKING PRESSURE	ATMOSPHERIC
WORKING TEMPERATURE	AMBIENT
WEIGHT EMPTY:	4500 LBS

PRECISIONEERING
303 NANTUCKET BLVD. SCARBOROUGH, ONTARIO

SHOP ORDER: TW6575-2 DATE MFD.: 2006
CUSTOMER: METCON SALES & ENGINEERING LIMITED
PURCHASE ORDER: 108075 EQUIP. NO.: TK-J100A
DESCRIPTION: 12'-0" x 15'-0" BRINE KING
WORKG. PRESS.: ATMOSPHERIC WORKG. TEMP.: AMBIENT
MATERIAL: ISOPHTHALIC

TANK NAMEPLATE

PRECISIONEERING STANDARD NAMEPLATE (FULL SIZE)

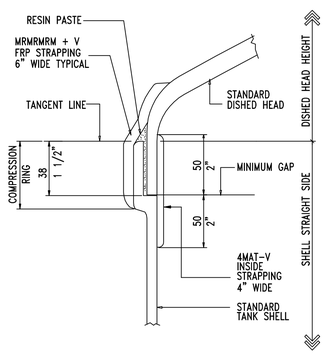

SHELL TO HEAD JOINT

STANDARD A S T M

SIZE LB.	A	B	t	T	C	D	E	F	G
3000	18"	10"	1/4"	1/4"	12"	4"	3"	1 1/2"	2"
	457	254	6	6	304	102	76	38	51

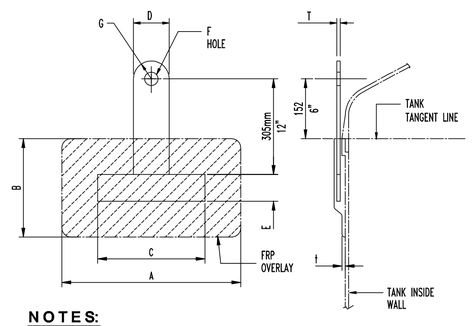

NOTES:

1. MATERIAL - 304SS
2. REMOVE ALL BURRS, SHARP EDGES AND ROUND ALL CORNERS.

STANDARD LIFTING LUG DETAIL

	tFW (AT BOTTOM)	tHLUR	tBS	tKSB
	.135	.270 3(MR)M	.120 MRM	.135 3REV
	.180	.360 4(MR)M	FOR 12' & UNDER	.180 4REV
	.225	.450 5(MR)M		.225 5REV
	.270	.540 6(MR)M	.280 3(MR)M	.270 6REV
	.315	.630 7(MR)M	FOR 13 1/2'	.315 7REV
	.360	.720 8(MR)M		.360 8REV
	.405	.810 10(MR)M		.405 9REV

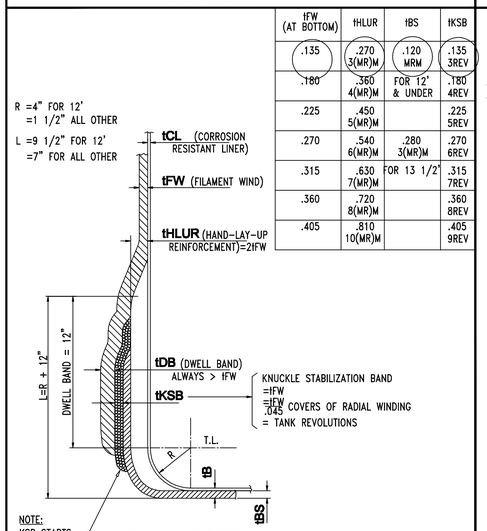

KNUCKLE DETAIL

STANDARD A S T M

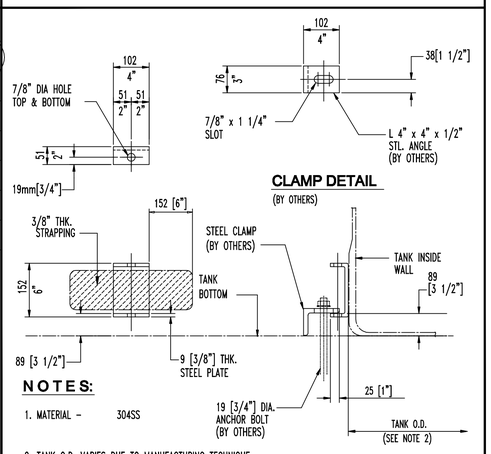

NOTES:

1. MATERIAL - 304SS
2. TANK O.D. VARIES DUE TO MANUFACTURING TECHNIQUE. DO NOT INSTALL ANCHOR BOLTS UNTIL TANK IS IN POSITION TO ENSURE PROPER ANCHOR BOLT LOCATION.

CLAMP DETAIL

(BY OTHERS)

STANDARD HOLD DOWN LUG DETAIL

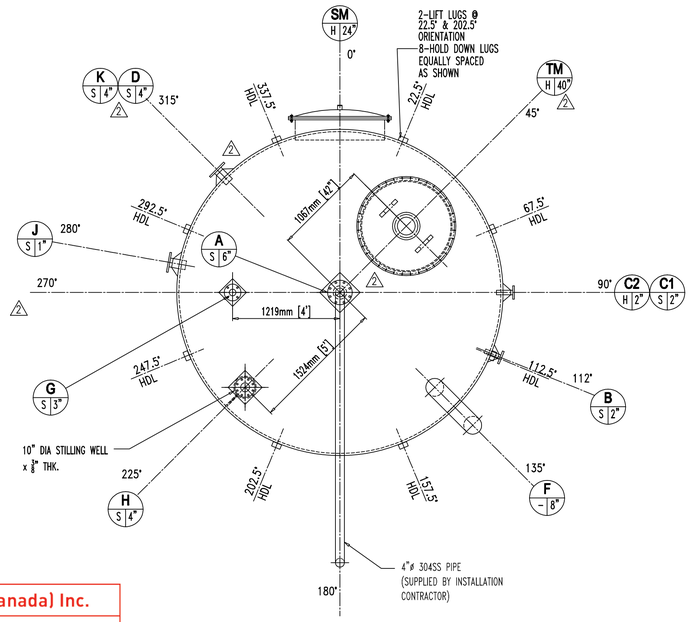

ORIENTATION PLAN

Earth Tech (Canada) Inc.

Reviewed for general conformance with design intent. Responsibility for detailed design in the shop drawings rests with the Contractor.

Responsibility for verification and correlation of field dimensions, fabrication process, techniques of construction, installation and coordination of all parts of the work rests with the Contractor.

REVIEWED
REVIEWED AS MODIFIED
REVISE AND RE-SUBMIT
NOT REVIEWED
Project No.
Date: By:

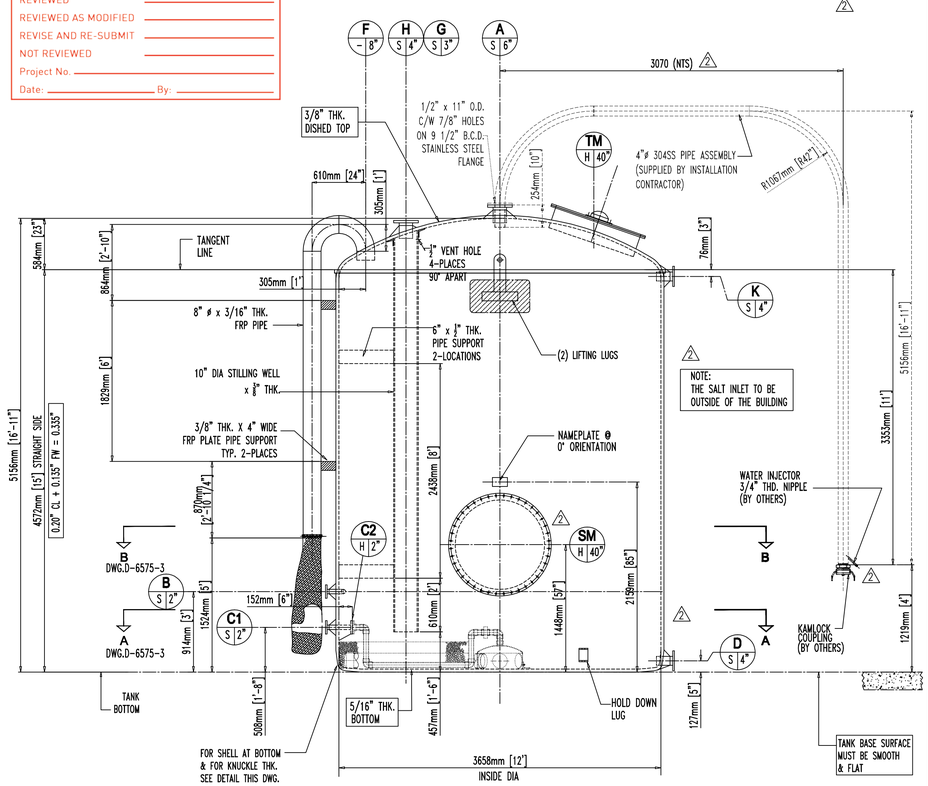

ELEVATION

ELEVATION VIEW IS FOR REFERENCE LOCATION ONLY FOR TRUE ORIENTATION REFER TO PLAN VIEWS

3/8" = 1'-0"

NOZZLE SCHEDULE

SHOP ORDER NO. TW6575-2 | DRAWING NO. D-6575-2 | REV 2

MARK	SIZE	DRILLING	RATING	CONN TYPE	NOZ PROJ	STRAP THK.	GUSSET	INTERNAL PIPE	MFG. CODE	NECK LENGTH	DESCRIPTION	Q.C. CHECK
A	150 [6"]	150 LB.	150PSI	FIG. 6	6"	1/4"	[P]	–	SPUN	8"	SALT INLET	
B	50 [2"]	150 LB.	150PSI	FIG. 6	6"	3/16"	[P]	YES	SPUN	8"	WATER INLET	
C1	50 [2"]	150 LB.	150PSI	FIG. 6	6"	3/16"	[P]	YES	SPUN	8"	BRINE OUTLET (OUTSIDE FLG.)	
C2	50 [2"]	150 LB.	150PSI	FIG. 6	6"	3/16"	[B]	YES	HLU	8"	BRINE OUTLET (INSIDE FLG.)	
D	100 [4"]	150 LB.	150PSI	FIG. 6	6"	1/4"	[P]	SCREEN	SPUN	8"	DRAIN C/W INTERNAL SCREEN	
E	DELETED											
F	200 [8"]	PIPE	25PSI	FIG. 6	–	5/16"	–	EXTERNAL	HLU	–	VENT	
G	75 [3"]	150 LB.	150PSI	FIG. 6	–	3/16"	[P]	–	FRP	8"	SALT LEVEL SENSOR	
H	100 [4"]	150 LB.	150PSI	FIG. 6	6"	3/16"	[P]	–	SPUN	8"	BRINE LEVEL SENSOR	
J	25 [1"]	150 LB.	150PSI	FIG. 6	6"	3/16"	[P]	–	SPUN	8"	TEMP PROBE	
K	100 [4"]	150 LB.	150PSI	FIG. 6	6"	3/16"	[P]	–	SPUN	8"	OVERFLOW	
TM	1016 [40"]	DUCT	STD		–	9/16"	–	–	HLU	–	TOP MANWAY	
SM	1016 [40"]	STD	10PSI	FIG. 6	6"	7/8"	–	–	HLU	–	SIDE MANWAY	

BLIND FLANGES & COVERS

ITEM	SIZE	DRILLING	RATING	THK	DESCRIPTION	GASKET	BOLTS
1	1016 [40"]	STD	10PSI	STD	SIDE MANWAY ' SM'	1/8" NEOPRENE	304 SS
2	1016 [40"]	SEE DWG	DUCT	STD	TOP MANWAY ' TM'	1/8" NEOPRENE	304SS

NOZZLE MARK NO. — A; FLANGE MFG. CODE — S 4"; NOZZLE SIZE

FLANGE MFG. CODE
S = SPUNCAST
H = HAND LAY UP (HLU)
C = COUPLING (FRP/PVC)
– = OTHERS

NOZZLE MARK

FIG. 6 — F.F. ASTM D3299 FIG. 6
FIG. 5 — F.F. ASTM D3299 FIG. 5

NOZZLE TYPE

FLANGE HOLES
BOLT HOLES STRADDLE TANK MAJOR CENTERLINES UNLESS NOTED OTHERWISE

MATING FLANGE
FIBERGLASS FLANGES ON TANK MUST ALWAYS BE CONNECTED TO FLAT FACE FLANGES ON EXTERNAL PIPING DO NOT CONNECT TO RAISED FACE FLANGES

FLANGE BOLT TORQUE
STANDARD BOLT TORQUE FOR FIBERGLASS FLANGES

CONSTRUCTION DETAILS

CORROSION LINER REINFORCING	1-C GLASS + 4 MAT			
PRECISIONEERING RESIN CONTROL CODE (SEE NAME PLATE)	LINER	4817	COLOR	CLEAR
	STRUCTURAL	4817	COLOR	GREY
	OUTER SKIN	.	COLOR	.
SPECIFICATION	CGSB 41-GP-22 & ASTM D3299			

QUALITY CONTROL

BARCOL HARDNESS	MINIMUM	TOP HEAD	SHELL	BOTTOM
THICKNESS	TOP HEAD	SHELL	BOTTOM	MANWAY BUILT-UP

INTERIOR CLEAN

INSPECTED BY: | WITNESSED BY:
DATE: | DATE:
GENERAL ORIENTATION | DETAILED ORIENTATION

LAMINATE SEQUENCE

THK.	HLU LAMINATE
1/4	V – 4M. 2M. H
5/16	V – 4M. M R M. H
3/8	V – 4M. 2(MR) M. H

HEAD TO SHELL JOINT: 2M+V x 4" WIDE=INSIDE; 4M+V x 4" WIDE=OUTSIDE; SEE DETAILS THIS DWG.

NOTE:
S = SYNTHETIC VEIL
V = C – GLASS VEIL
M = 1 1/2 oz CHOPPED STRAND MAT
R = WOVEN ROVING 24 OZ
H = HOT COAT

TANK REQUIREMENTS

LAMINATE LEVEL	STD.	LIFTING LUGS	YES
HYDROTEST	--	HOLD DOWN LUGS	YES
STEAM CURE	YES	PYRAMID GUSSETS [P]	YES
BPO/DMA	--	BLADE GUSSETS [B]	--
POST CURE	--	SIGHTGLASS	--
CALIBRATION SCALE	--	FRP LADDER	--
TRANSLUCENT STRIP	--	STEEL LADDER	--
SAVE CUT-OUTS	--	PLATFORM	--

- TO LIFT TANK, USE CRANE AND SPREADER BAR.
- ANGLE BETWEEN TANGENT LINE AND LIFTING CABLE MUST BE 65° OR GREATER
- IF NO SPREADER BAR AVAILABLE EXTEND CABLES MORE THAN ONE TANK DIAMETER

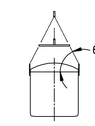

TANK HANDLING INSTRUCTIONS

READ THIS DRAWING WITH DWG. D-6575-3 & 4

CERTIFIED FOR PRODUCTION
BY:
DATE:

DO NOT SCALE THIS DRAWING USE DIMENSIONS ONLY

BY	DATE	REVISION	NO
WVI	19JAN07	LADDER DELETED, NOZZLE 'E' DELETED , SIDE MANWAY CHANGED TO 40" DIA, TOP MANWAY & NOZZLE RELOCATED AS SHOWN SALT INLET PIPING REVISED AS NOTED	2
WVI	25AUG06	REVISED PER CUSTOMER COMMENTS	1
WVI	.	ISSUED FOR CUSTOMERS APPROVAL	0

THE INFORMATION AND KNOW HOW ON THIS DRAWING ARE CONFIDENTIAL AND MAY NOT BE USED OR REPRODUCED WITHOUT WRITTEN PERMISSION OF PRECISIONEERING

DRAWN	W Inumerable
CHECKED	
DATE	5 AUG 2006
SCALE	N T S

PRECISIONEERING
303 NANTUCKET BLVD. SCARBOROUGH ONTARIO M1P 2P2 Email sales@PRECISIONEERING.COM

FRP BRINE TANK FOR
METCON SALES & ENGINEERING LIMITED

CAD FILE NO:	SIZE	PURCHASE ORDER NO.	SHOP ORDER NO.	DRAWING NO.	REV
TW6575-2	D	108075	TW6575-2	D-6575-2	2

CUSTOMER REFERENCE DWG.: .

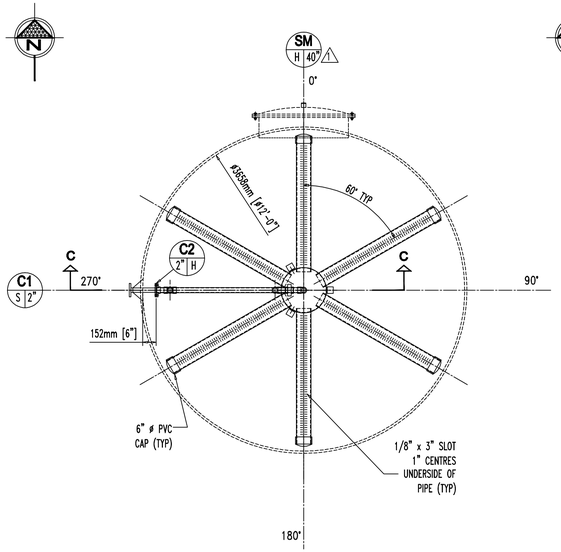

SECTION A-A

DWG. D-6575-1

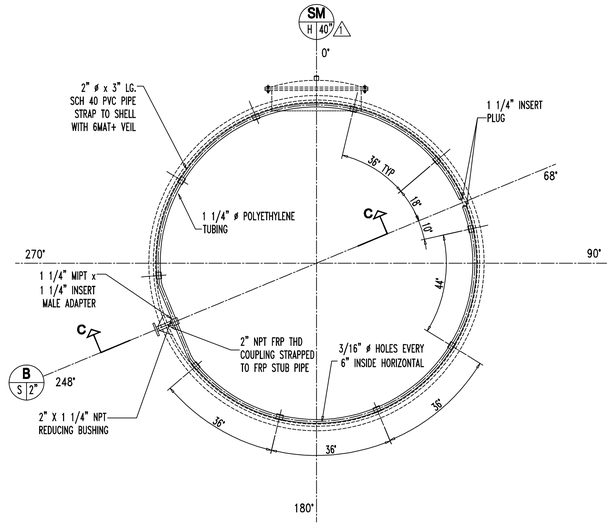

SECTION B-B

DWG. D-6575-1

DIMENSIONS IN INCHES								
A	PSI	B	C	D	E	F	H	BOLTS
I.D.		WALL THK.	O.D.	FLANGE THK.	COVER THK.	HOLE NO/ DIA.	B.C.D.	QUANTITY DIA. & LENGTH
1016 40	DUCT	6 1/4	1127 44 3/8	16 5/8	16 5/8 FLAT	(36)11 (36)7/16	1092 43	36 - 9 x 64 36 - 3/8 x 2 1/2

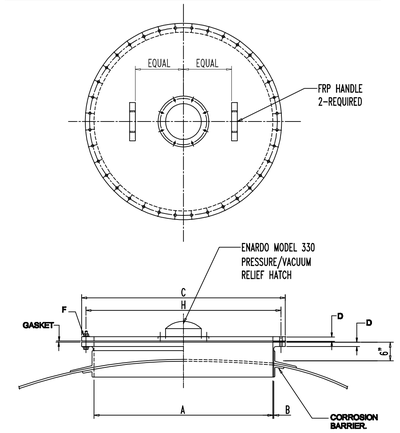

TOP MANWAY

DIMENSIONS IN INCHES								
A	PSI	B	C	D	E	F	H	BOLTS
I.D.		WALL THK.	O.D.	FLANGE THK.	COVER THK.	HOLE DIA.	B.C.D.	QUANTITY DIA. & LENGTH
1016 40	10	9 3/8	1168 46	25 1	13 1/2	19 3/4	1118 44	40- 5/8 X 3 1/2

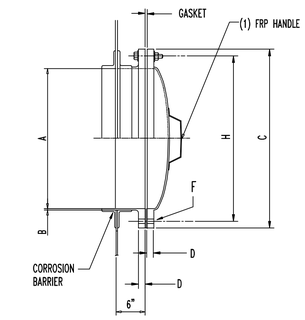

⚠ DETAIL OF SIDE MANWAY

NOTE TO CUSTOMER

QUARTZ FILTER BED (SUPPLIED & INSTALLED BY OTHERS) REQUIRED FOR GRANULATED SALT OR A FINE GRADE OF SOLAR SALT ONLY,
TO CONSIST OF 5" LAYER-.125" X .25" AT TOP
AND 7" LAYER-.25" X .50" AT BOTTOM.
QUARTZ FILTER BED TO COVER ENTIRE BOTTOM OF TANK.
IF ROCK SALT IS USED DO NOT USE QUARTZ ROCK FILTER BED.

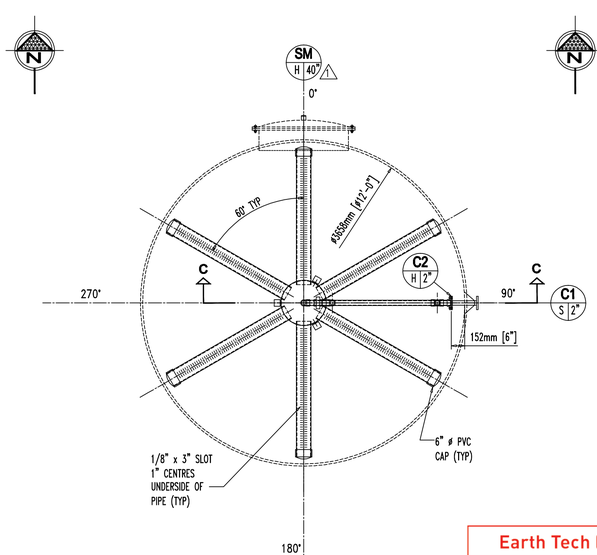

SECTION A-A

DWG. D-6575-2

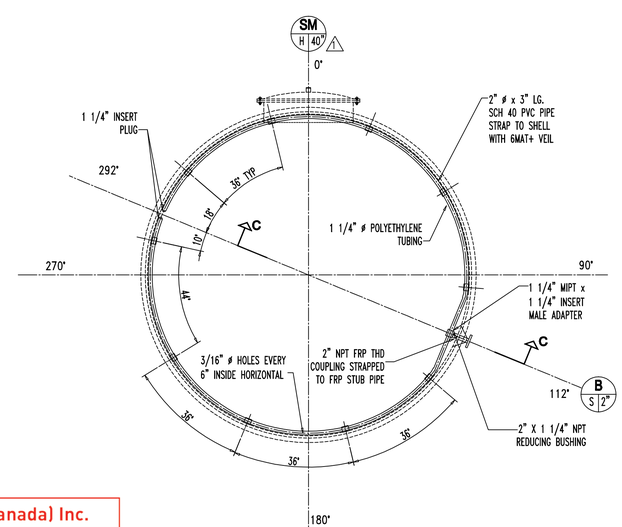

SECTION B-B

DWG. D-6575-2

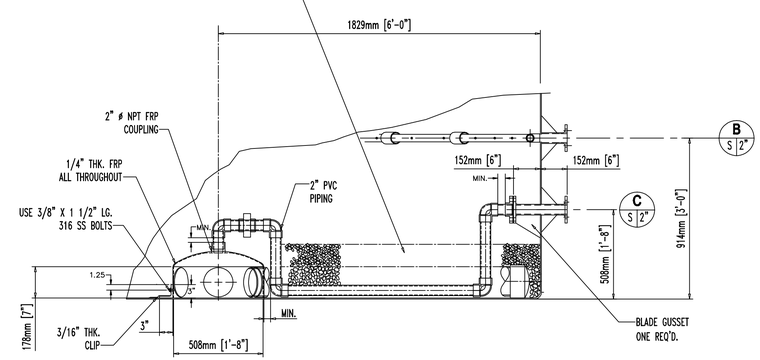

SECTION C-C

3/8" = 1'-0"

Earth Tech (Canada) Inc.

Reviewed for general conformance with design intent. Responsibility for detailed design in the shop drawings rests with the Contractor.

Responsibility for verification and correlation of field dimensions, fabrication process, techniques of construction, installation and coordination of all parts of the work rests with the Contractor.

REVIEWED _____
REVIEWED AS MODIFIED _____
REVISE AND RE-SUBMIT _____
NOT REVIEWED _____
Project No. _____
Date: _____ By: _____

CERTIFIED
FOR PRODUCTION
BY:.....
DATE: .....

NO	REVISION	DATE	BY
1	MANWAY SIZE CHANGED TO 40" DIA	19JAN07	WVI
0	ISSUED FOR CUSTOMERS APPROVAL	.	WVI

DO NOT SCALE THIS DRAWING
USE DIMENSIONS ONLY

THE INFORMATION AND KNOW HOW ON THIS DRAWING ARE CONFIDENTIAL AND MAY NOT BE USED OR REPRODUCED WITHOUT WRITTEN PERMISSION OF PRECISIONEERING

DRAWN	W Inumerable
CHECKED	
DATE	5 AUG 2006
SCALE	N T S
CAD FILE NO3 TW6575-3	SIZE D
CUSTOMER REFERENCE DWG. .	PURCHASE ORDER NO. 108075

PRECISIONEERING
303 NANTUCKET BLVD. SCARBOROUGH ONTARIO M1P 2P2 Email sales@PRECISIONEERING.COM

FRP BRINE TANK FOR
METCOM SALES & ENGINEERING LIMITED

SHOP ORDER NO.	DRAWING NO.	REV
TW6575	D-6575-3	1

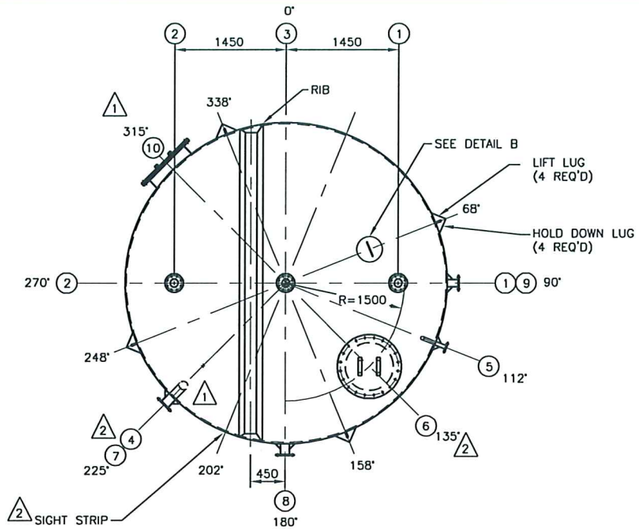

PLAN VIEW

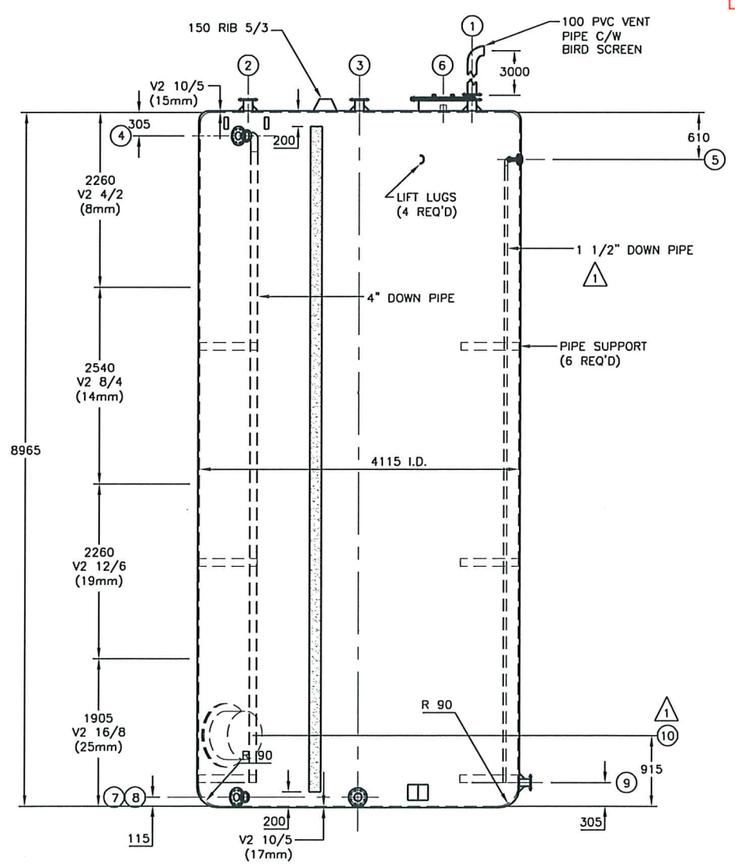

ELEVATION

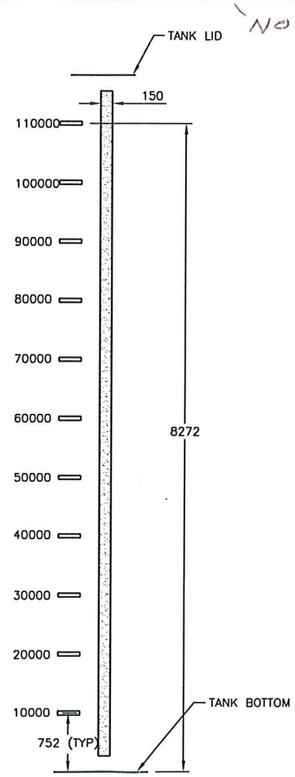

SIGHT STRIP DETAIL

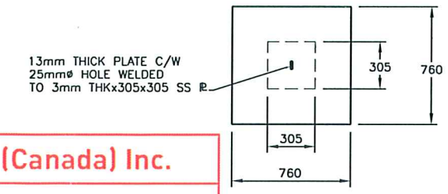

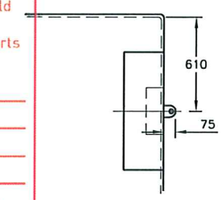

LIFT LUG DETAIL
(4 REQ'D)

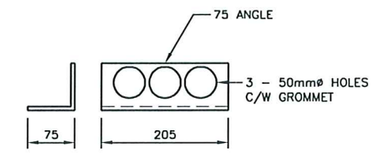

DETAIL B
ELECTRICAL CONDUIT
SUPPORT

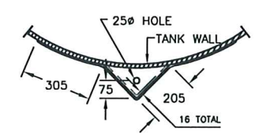

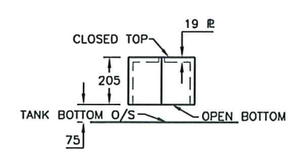

HOLD DOWN LUG DETAIL
(4 REQ'D)

FITTING SCHEDULE

ITEM	DESCRIPTION	JNT TYP	FLANGE I.D.	FLANGE O.D.	FLANGE THK	B/F THK	DRILLING
1	AIR OUTLET	F	4"	9 1/2"	5/8"	5/8"	8- 5/8"ø HOLES ON 7 1/2" B.C.D. C/W 1/2"ø BOLTS & GSKT.
2	AIR INLET	F	4"	9 1/2"	5/8"		8- 5/8"ø HOLES ON 7 1/2" B.C.D.
3	LEVEL SENSOR	F	4"	9 1/2"	5/8"		8- 5/8"ø HOLES ON 7 1/2" B.C.D.
4	OVERFLOW	F	4"	9 1/2"	5/8"		8- 5/8"ø HOLES ON 7 1/2" B.C.D.
5	DILUTED HYPO	F	1 1/2"	5 1/2"	1/2"		4- 5/8"ø HOLES ON 3 7/8" B.C.D.
6	MANHOLE	F	24"	32 1/2"	1"		20- 3/4"ø HOLES ON 29 1/2" B.C.D. C/W 5/8"ø BOLTS & GSKT.
7	DRAIN	F	4"	9 1/2"	5/8"		8- 5/8"ø HOLES ON 7 1/2" B.C.D.
8	HYPO OUT	F	4"	9 1/2"	5/8"		8- 5/8"ø HOLES ON 7 1/2" B.C.D.
9	HYPO IN	P	3"	8"	5/8"		4- 5/8"ø HOLES ON 6" B.C.D.
10	MANHOLE	F	24"	32 1/2"	1"		20- 3/4"ø HOLES ON 29 1/2" B.C.D. C/W 5/8"ø BOLTS & GSKT.

Earth Tech (Canada) Inc.

Reviewed for general conformance with design intent. Responsibility for detailed design in the shop drawings rests with the Contractor.

Responsibility for verification and correlation of field dimensions, fabrication process, techniques of construction, installation and coordination of all parts of the work rests with the Contractor.

REVIEWED
REVIEWED AS MODIFIED
REVISE AND RE-SUBMIT
NOT REVIEWED
Project No. 79538 - C2816
Date: 5/2/07 By:

NO COMMENT

GENERAL NOTES:

LINER: 2 LAYERS OF SYNTHETIC "NEXUS" VEIL & 2 PLIES 1.5 OZ. MAT AOC-F010 VINYL ESTER RESIN. BPO CURED
STRUCTURE: ALTERNATE PLIES OT 1.5 OZ. MAT & 24 OZ. WOVEN ROVING TO SPECIFIED THICKNESS WITH VINYL ESTER AOC-F010 RESIN.
FINISH: LAST MAT/ROVING/MAT & RESIN RICH FLOOD COAT TO BE AOC-K022 VINYL ESTER FIRE RETARDANT RESIN C/W 3-5% ANTIMONY TRIOXIDE & PIGMENTED GREY.
CURING: TANK TO BE POST CURED AT 160°F FOR 6 HRS.
MANHOLE BOLTS: TYPE 316 ST.STL.
MANHOLE GASKET: 1/4" THICK BLACK NEOPRENE 50 DURO.
FITTINGS: ALL FITTINGS TO BE FULL FACE FLANGE DRILL TO 150 LB ANSI BOLT CIRCLE. HOLES TO STRADDLE CENTER LINES.
BOLT TORQUE: UP TO 8" FLANGE: 40 ft.lb.
10" TO 24" FLANGE: 100 ft.lb.
CONSTRUCTION STANDARD: CGSB 41.22-93
VISUAL ACCEPTANCE: CGSB 41.22-93 LEVEL 3
QUALITY ASSURANCE: CSA CAN 3 Z299.4
DESIGN PRESSURE: HYDROSTATIC ONLY S.G. = 1.0
APPROXIMATE SHIPPING WEIGHT: 3500 KG

ALL DIMENSIONS TO INSIDE OF TANK

STRUCTURAL GLASS LTD. RESERVES PROPRIETORY RIGHTS ON THIS DRAWING OR ANY PART OF THE INFORMATION CONTAINED THEREON. THIS DRAWING SHALL BE CONSIDERED CONFIDENTIAL MATERIAL AND IS NOT TO BE USED FOR COMPETITIVE BIDDING NOR FOR USE WITH ANY PROCUREMENTS OTHER THAN FROM STRUCTURAL GLASS LTD.

3		
2	CLIENT REVISIONS	JAN.31/07
1	CLIENT REVISIONS	AUG 15/06
	REVISION	DATE

Structural Glass Ltd.
Fibreglass Fabricator Winnipeg, Canada

CUSTOMER NAME: METCON

HYPOCHLORITE TANK
J500 A (NW TANK)

DRAWN S.P.	CLIENT NO.		
DATE JULY 25/06	SCALE N.T.S.	PROJECT NO.	DRAWING NO. 2236

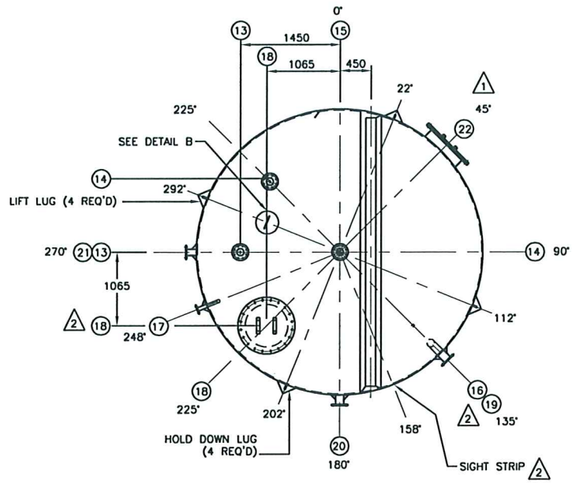

PLAN VIEW

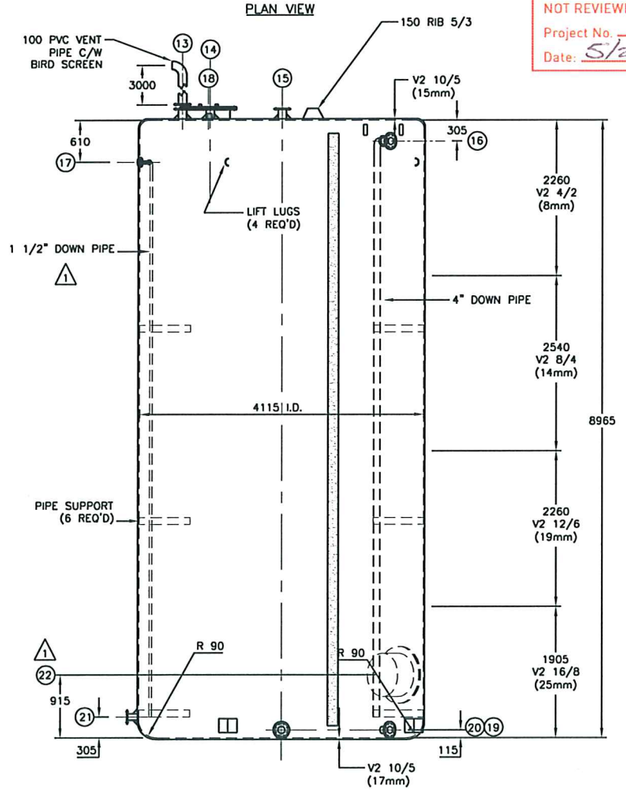

ELEVATION

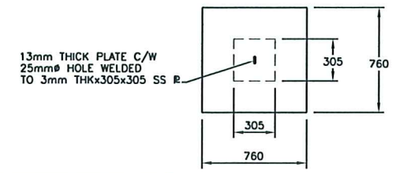

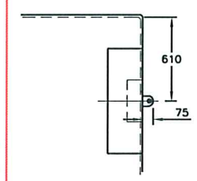

LIFT LUG DETAIL
(4 REQ'D)

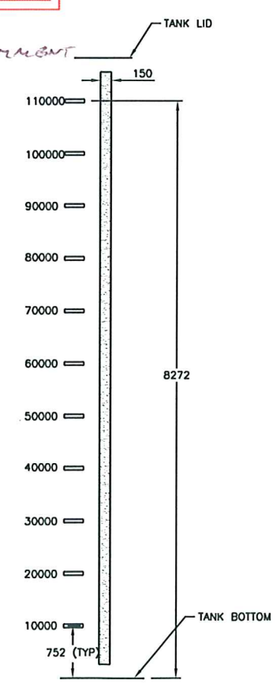

SIGHT STRIP DETAIL

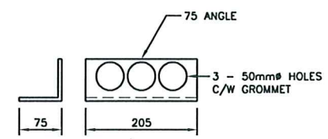

DETAIL B
ELECTRICAL CONDUIT SUPPORT

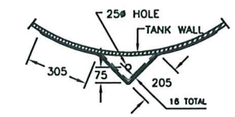

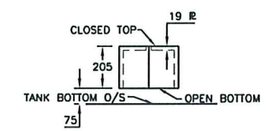

HOLD DOWN LUG DETAIL
(4 REQ'D)

FITTING SCHEDULE

ITEM	DESCRIPTION	JNT TYP	FLANGE I.D.	FLANGE O.D.	FLANGE THK	B/F THK	DRILLING
13	AIR OUTLET	F	4"	9 1/2"	5/8"	5/8"	8- 5/8"ø HOLES ON 7 1/2" B.C.D. C/W 1/2"ø BOLTS & GSKT.
14	AIR INLET	F	4"	9 1/2"	5/8"		8- 5/8"ø HOLES ON 7 1/2" B.C.D.
15	LEVEL SENSOR	F	4"	9 1/2"	5/8"		8- 5/8"ø HOLES ON 7 1/2" B.C.D.
16	OVERFLOW	F	4"	9 1/2"	5/8"		8- 5/8"ø HOLES ON 7 1/2" B.C.D.
17	DILUTED HYPO	F	1 1/2"	5 1/2"	1/2"		4- 5/8"ø HOLES ON 3 7/8" B.C.D.
18	MANHOLE	F	24"	32 1/2"	1"		20- 3/4"ø HOLES ON 29 1/2" B.C.D. C/W 5/8"ø BOLTS & GSKT.
19	DRAIN	F	4"	9 1/2"	5/8"		8- 5/8"ø HOLES ON 7 1/2" B.C.D.
20	HYPO OUT	F	4"	9 1/2"	5/8"		8- 5/8"ø HOLES ON 7 1/2" B.C.D.
21	HYPO IN	P	3"	8"	5/8"		4- 5/8"ø HOLES ON 6" B.C.D.
22	MANHOLE	F	24"	32 1/2"	1"		20- 3/4"ø HOLES ON 29 1/2" B.C.D. C/W 5/8"ø BOLTS & GSKT.

Earth Tech (Canada) Inc.

Reviewed for general conformance with design intent. Responsibility for detailed design in the shop drawings rests with the Contractor.

Responsibility for verification and correlation of field dimensions, fabrication process, techniques of construction, installation and coordination of all parts of the work rests with the Contractor.

REVIEWED _____
REVIEWED AS MODIFIED _____
REVISE AND RE-SUBMIT _____
NOT REVIEWED _____
Project No. 79538-C28 16
Date: 5/2/07 By: [illegible]

No Comment

GENERAL NOTES:

LINER: 2 LAYERS OF SYNTHETIC "NEXUS" VEIL & 2 PLIES 1.5 OZ. MAT AOC-F010 VINYL ESTER RESIN. BPO CURED
STRUCTURE: ALTERNATE PLIES OT 1.5 OZ. MAT & 24 OZ. WOVEN ROVING TO SPECIFIED THICKNESS WITH VINYL ESTER AOC-F010 RESIN.
FINISH: LAST MAT/ROVING/MAT & RESIN RICH FLOOD COAT TO BE AOC-K022 VINYL ESTER FIRE RETARDANT RESIN C/W 3-5% ANTIMONY TRIOXIDE & PIGMENTED GREY.
CURING: TANK TO BE POST CURED AT 160°F FOR 6 HRS.
MANHOLE BOLTS: TYPE 316 ST.STL.
MANHOLE GASKET: 1/4" THICK BLACK NEOPRENE 50 DURO.
FITTINGS: ALL FITTINGS TO BE FULL FACE FLANGE DRILL TO 150 LB ANSI BOLT CIRCLE. HOLES TO STRADDLE CENTER LINES.
BOLT TORQUE: UP TO 8" FLANGE: 40 ft.lb.
10" TO 24" FLANGE: 100 ft.lb.
CONSTRUCTION STANDARD: CGSB 41.22-93
VISUAL ACCEPTANCE: CGSB 41.22-93 LEVEL 3
QUALITY ASSURANCE: CSA CAN 3 Z299.4
DESIGN PRESSURE: HYDROSTATIC ONLY S.G. = 1.0
APPROXIMATE SHIPPING WEIGHT: 3500 KG

ALL DIMENSIONS TO INSIDE OF TANK

STRUCTURAL GLASS LTD. RESERVES PROPRIETORY RIGHTS ON THIS DRAWING OR ANY PART OF THE INFORMATION CONTAINED THEREON. THIS DRAWING SHALL BE CONSIDERED CONFIDENTIAL MATERIAL AND IS NOT TO BE USED FOR COMPETITIVE BIDDING NOR FOR USE WITH ANY PROCUREMENTS OTHER THAN FROM STRUCTURAL GLASS LTD.

3		
2	CLIENT REVISIONS	JUN 31/07
1	CLIENT REVISIONS	AUG 15/06
	REVISION	DATE

Structural Glass Ltd.
Fibreglass Fabricator Winnipeg, Canada

CUSTOMER NAME: METCON

HYPOCHLORITE TANK
J520A (NE TANK)

DRAWN S.P.	CLIENT NO.		
DATE JULY 25/06	SCALE N.T.S.	PROJECT NO.	DRAWING NO. 2237

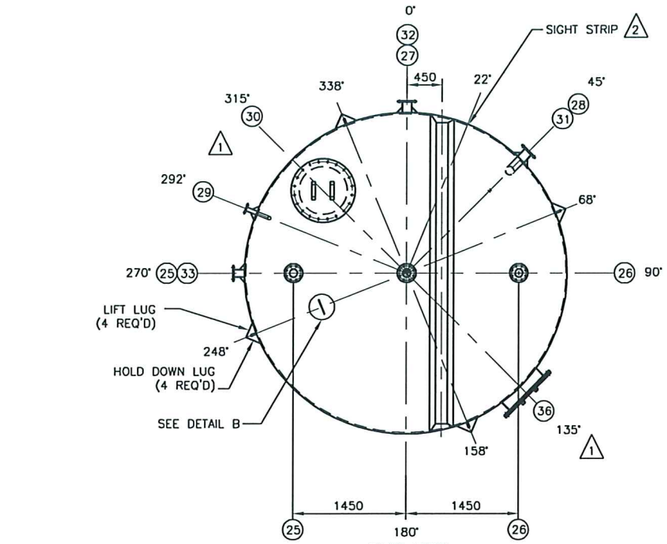

PLAN VIEW

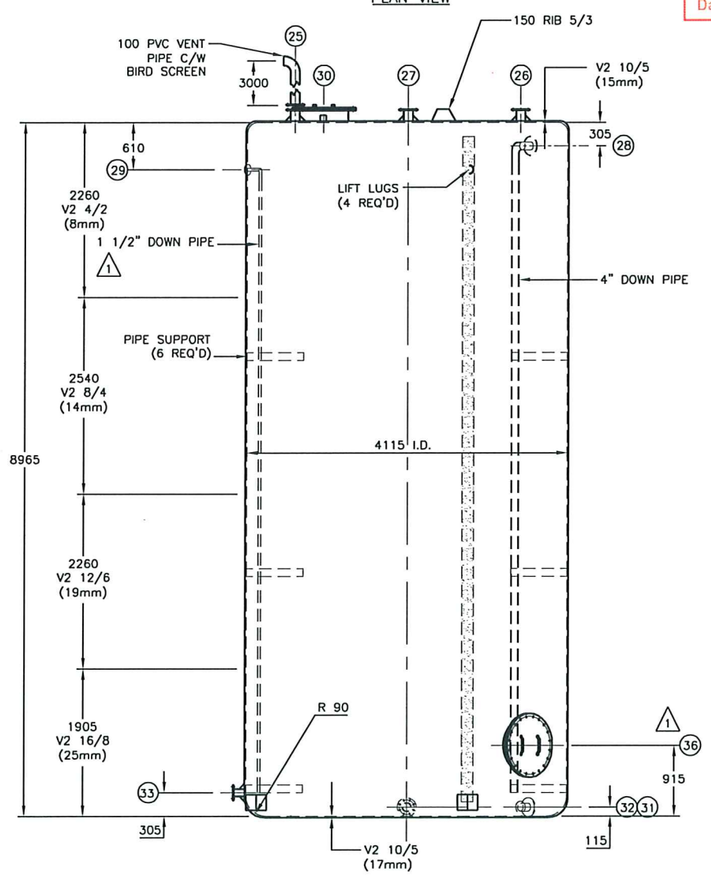

ELEVATION

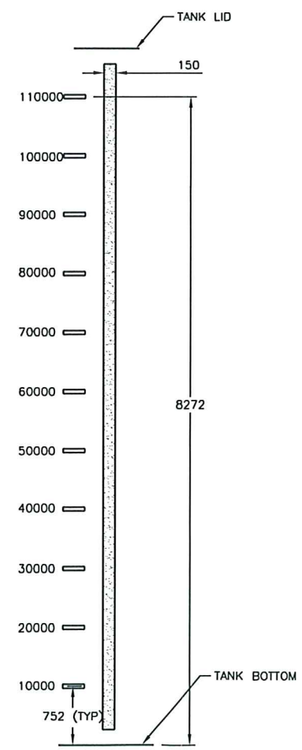

2 SIGHT STRIP DETAIL

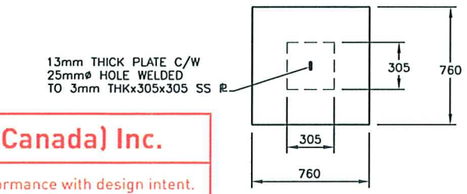

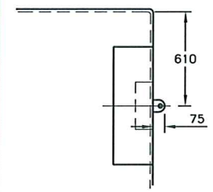

LIFT LUG DETAIL
(4 REQ'D)

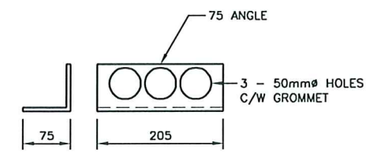

DETAIL B
ELECTRICAL CONDUIT
SUPPORT

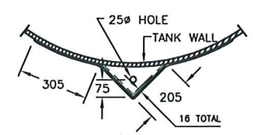

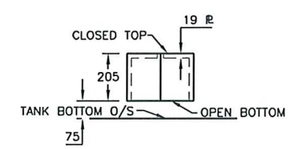

HOLD DOWN LUG DETAIL
(4 REQ'D)

Earth Tech (Canada) Inc.

Reviewed for general conformance with design intent. Responsibility for detailed design in the shop drawings rests with the Contractor.

Responsibility for verification and correlation of field dimensions, fabrication process, techniques of construction, installation and coordination of all parts of the work rests with the Contractor.

REVIEWED _____

REVIEWED AS MODIFIED _____

REVISE AND RE-SUBMIT _____

NOT REVIEWED _____

Project No. 79538-C&I 16

Date: 5/2/07 By: [illegible]

NO COMMENT

FITTING SCHEDULE

	ITEM	DESCRIPTION	JNT TYP	FLANGE I.D.	FLANGE O.D.	FLANGE THK	B/F THK	DRILLING
	25	AIR OUTLET	F	4"	9 1/2"	5/8"		8- 5/8"ø HOLES ON 7 1/2" B.C.D. C/W 1/2"ø BOLTS & GSKT.
	26	AIR INLET	F	4"	9 1/2"	5/8"		8- 5/8"ø HOLES ON 7 1/2" B.C.D.
	27	LEVEL SENSOR	F	4"	9 1/2"	5/8"		8- 5/8"ø HOLES ON 7 1/2" B.C.D.
	28	OVERFLOW	F	4"	9 1/2"	5/8"		8- 5/8"ø HOLES ON 7 1/2" B.C.D.
	29	DILUTED HYPO	F	1 1/2"	5 1/2"	1/2"		4- 5/8"ø HOLES ON 3 7/8" B.C.D.
	30	MANHOLE	F	24"	32 1/2"	1"		20- 3/4"ø HOLES ON 29 1/2" B.C.D. C/W 5/8"ø BOLTS & GSKT.
	31	DRAIN	F	4"	9 1/2"	5/8"		8- 5/8"ø HOLES ON 7 1/2" B.C.D.
	32	HYPO OUT	F	4"	9 1/2"	5/8"		8- 5/8"ø HOLES ON 7 1/2" B.C.D.
	33	HYPO IN	P	3"	8"	5/8"		4- 5/8"ø HOLES ON 6" B.C.D.
2	34	OMITTED						
	35	OMITTED						
1	36	MANHOLE	F	24"	32 1/2"	1"		20- 3/4"ø HOLES ON 29 1/2" B.C.D. C/W 5/8"ø BOLTS & GSKT.

GENERAL NOTES:

LINER: 2 LAYERS OF SYNTHETIC "NEXUS" VEIL & 2 PLIES 1.5 OZ. MAT AOC-F010 VINYL ESTER RESIN. BPO CURED
STRUCTURE: ALTERNATE PLIES OT 1.5 OZ. MAT & 24 OZ. WOVEN ROVING TO SPECIFIED THICKNESS WITH VINYL ESTER AOC-F010 RESIN.
FINISH: LAST MAT/ROVING/MAT & RESIN RICH FLOOD COAT TO BE AOC-K022 VINYL ESTER FIRE RETARDANT RESIN C/W 3-5% ANTIMONY TRIOXIDE & PIGMENTED GREY.
CURING: TANK TO BE POST CURED AT 160°F FOR 6 HRS.
MANHOLE BOLTS: TYPE 316 ST.STL.
MANHOLE GASKET: 1/4" THICK BLACK NEOPRENE 50 DURO.
FITTINGS: ALL FITTINGS TO BE FULL FACE FLANGE DRILL TO 150 LB ANSI BOLT CIRCLE. HOLES TO STRADDLE CENTER LINES.
BOLT TORQUE: UP TO 8" FLANGE: 40 ft.lb.
10" TO 24" FLANGE: 100 ft.lb.
CONSTRUCTION STANDARD: CGSB 41.22-93
VISUAL ACCEPTANCE: CGSB 41.22-93 LEVEL 3
QUALITY ASSURANCE: CSA CAN 3 Z299.4
DESIGN PRESSURE: HYDROSTATIC ONLY S.G. = 1.0
APPROXIMATE SHIPPING WEIGHT: 3500 KG

ALL DIMENSIONS TO INSIDE OF TANK

STRUCTURAL GLASS LTD. RESERVES PROPRIETORY RIGHTS ON THIS DRAWING OR ANY PART OF THE INFORMATION CONTAINED THEREON. THIS DRAWING SHALL BE CONSIDERED CONFIDENTIAL MATERIAL AND IS NOT TO BE USED FOR COMPETITIVE BIDDING NOR FOR USE WITH ANY PROCUREMENTS OTHER THAN FROM STRUCTURAL GLASS LTD.

3		
2	CLIENT REVISIONS	JAN.31/07
1	CLIENT REVISIONS	AUG 13/06
	REVISION	DATE

Structural Glass Ltd.
Fibreglass Fabricator Winnipeg, Canada

CUSTOMER NAME: METCON

HYPOCHLORITE TANK
TK-J560A (SE TANK)

DRAWN S.P.	CLIENT NO.		
DATE JULY 25/06	SCALE N.T.S.	PROJECT NO.	DRAWING NO. 2238

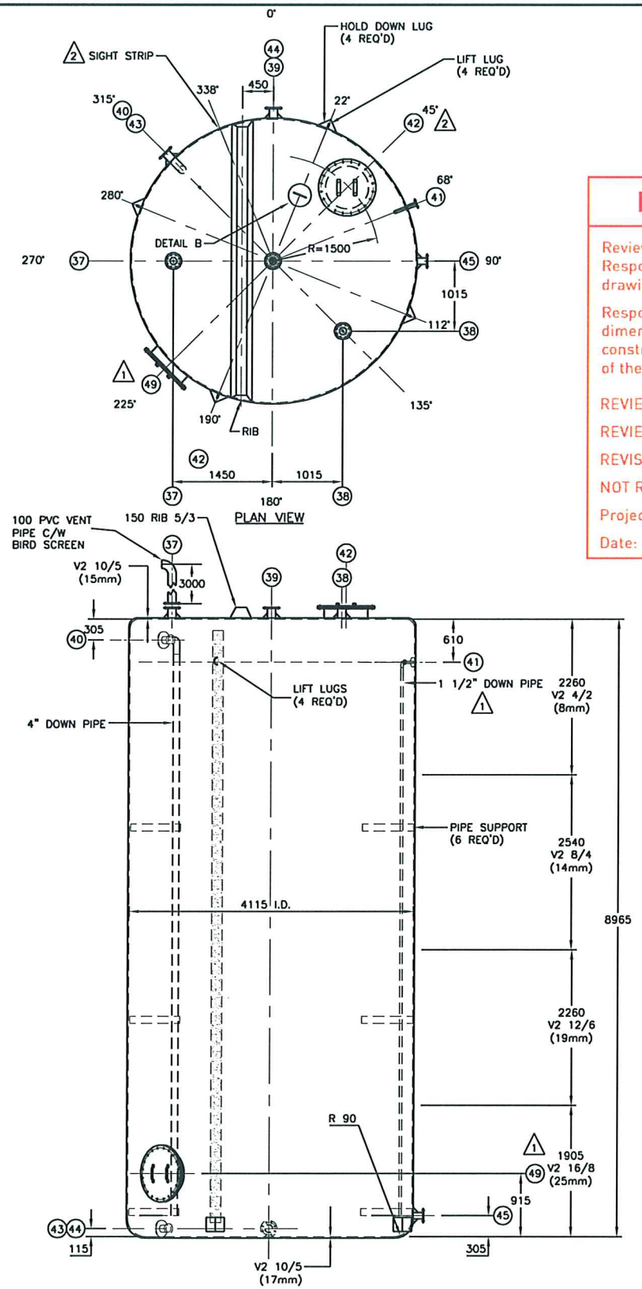

ELEVATION

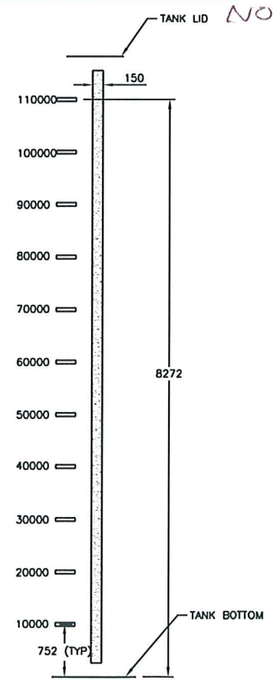

SIGHT STRIP DETAIL

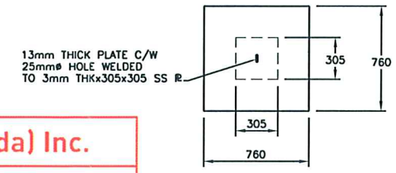

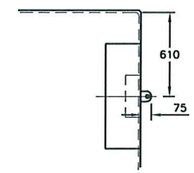

LIFT LUG DETAIL
(4 REQ'D)

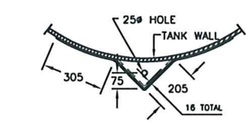

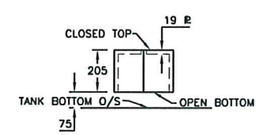

HOLD DOWN LUG DETAIL
(4 REQ'D)

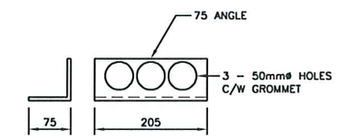

DETAIL B
ELECTRICAL CONDUIT SUPPORT

Earth Tech (Canada) Inc.

Reviewed for general conformance with design intent. Responsibility for detailed design in the shop drawings rests with the Contractor.

Responsibility for verification and correlation of field dimensions, fabrication process, techniques of construction, installation and coordination of all parts of the work rests with the Contractor.

REVIEWED
REVIEWED AS MODIFIED
REVISE AND RE-SUBMIT
NOT REVIEWED
Project No. 79538-C28-16
Date: 5/2/07 By: M. Tak

NO COMMENT

FITTING SCHEDULE

	ITEM	DESCRIPTION	JNT TYP	FLANGE I.D.	FLANGE O.D.	FLANGE THK	B/F THK	DRILLING
	37	AIR OUTLET	F	4"	9 1/2"	5/8"	5/8"	8- 5/8"ø HOLES ON 7 1/2" B.C.D. C/W 1/2"ø BOLTS & GSKT.
	38	AIR INLET	F	4"	9 1/2"	5/8"		8- 5/8"ø HOLES ON 7 1/2" B.C.D.
	39	LEVEL SENSOR	F	4"	9 1/2"	5/8"		8- 5/8"ø HOLES ON 7 1/2" B.C.D.
	40	OVERFLOW	F	4"	9 1/2"	5/8"		8- 5/8"ø HOLES ON 7 1/2" B.C.D.
	41	DILUTED HYPO	F	1 1/2"	5 1/2"	1/2"		4- 5/8"ø HOLES ON 3 7/8" B.C.D.
	42	MANHOLE	F	24"	32 1/2"	1"		20- 3/4"ø HOLES ON 29 1/2" B.C.D. C/W 5/8"ø BOLTS & GSKT.
	43	DRAIN	F	4"	9 1/2"	5/8"		8- 5/8"ø HOLES ON 7 1/2" B.C.D.
	44	HYPO OUT	F	4"	9 1/2"	5/8"		8- 5/8"ø HOLES ON 7 1/2" B.C.D.
	45	HYPO IN	P	3"	8"	5/8"		4- 5/8"ø HOLES ON 6" B.C.D.
	46	OMITTED						
2	47	OMITTED						
	48	OMITTED						
1	49	MANHOLE	F	24"	32 1/2"	1"		20- 3/4"ø HOLES ON 29 1/2" B.C.D. C/W 5/8"ø BOLTS & GSKT.

GENERAL NOTES:

LINER: 2 LAYERS OF SYNTHETIC "NEXUS" VEIL & 2 PLIES 1.5 OZ. MAT AOC-F010 VINYL ESTER RESIN. BPO CURED
STRUCTURE: ALTERNATE PLIES OF 1.5 OZ. MAT & 24 OZ. WOVEN ROVING TO SPECIFIED THICKNESS WITH VINYL ESTER AOC-F010 RESIN.
FINISH: LAST MAT/ROVING/MAT & RESIN RICH FLOOD COAT TO BE AOC-K022 VINYL ESTER FIRE RETARDANT RESIN C/W 3-5% ANTIMONY TRIOXIDE & PIGMENTED GREY.
CURING: TANK TO BE POST CURED AT 160°F FOR 6 HRS.
MANHOLE BOLTS: TYPE 316 ST.STL.
MANHOLE GASKET: 1/4" THICK BLACK NEOPRENE 50 DURO.
FITTINGS: ALL FITTINGS TO BE FULL FACE FLANGE DRILL TO 150 LB ANSI BOLT CIRCLE. HOLES TO STRADDLE CENTER LINES.
BOLT TORQUE: UP TO 8" FLANGE: 40 ft.lb.
10" TO 24" FLANGE: 100 ft.lb.
CONSTRUCTION STANDARD: CGSB 41.22-93
VISUAL ACCEPTANCE: CGSB 41.22-93 LEVEL 3
QUALITY ASSURANCE: CSA CAN 3 Z299.4
DESIGN PRESSURE: HYDROSTATIC ONLY S.G. = 1.0
APPROXIMATE SHIPPING WEIGHT: 3500 KG

ALL DIMENSIONS TO INSIDE OF TANK

STRUCTURAL GLASS LTD. RESERVES PROPRIETORY RIGHTS ON THIS DRAWING OR ANY PART OF THE INFORMATION CONTAINED THEREON. THIS DRAWING SHALL BE CONSIDERED CONFIDENTIAL MATERIAL AND IS NOT TO BE USED FOR COMPETITIVE BIDDING NOR FOR USE WITH ANY PROCUREMENTS OTHER THAN FROM STRUCTURAL GLASS LTD.

	REVISION	DATE
3		
2	CLIENT REVISIONS	JUL 31/07
1	CLIENT REVISIONS	AUG 15/06

Structural Glass Ltd.
Fibreglass Fabricator Winnipeg, Canada

CUSTOMER NAME: METCON

HYPOCHLORITE TANK
J540A (SW TANK)

DRAWN S.P.	CLIENT NO.		
DATE JULY 25/06	SCALE N.T.S.	PROJECT NO.	DRAWING NO. 2239

SEC. 12:
INSTRUMENTATION

METCON
SALES & ENGINEERING LIMITED

Project Name: **CITY OF WINNIPEG-ONSITE HYPOCHLORITE GENERATION EQUIPMENT**
Project No: **06-ES5564**
Date: **August 2006**

SUBMITTAL DRAWINGS

Section 12

INSTRUMENTATION

Instrument Specification Sheets

Bill of Materials

Brochures and Catalogue Sheets:

- ABB Magmaster Flowmeter
- HACH Hardness Monitor
- ASCO Solenoid Valve
- SmartBob Salt Level
- E&H Brine Level Switch
- ABB Temperature Transmitter
- Siemens Ultrasonic Level Transmitter
- Crowncon Hydrogen Gas Detector
- Flygt Float Switch
- FRP Stands

Prepared by: **Metcon**

INSTRUMENTATION SPECIFICATION SHEETS

Metcon Sales & Engineering
PROJECT NAME: CITY OF WINNIPEG
ONSITE HYPOCHLORITE GENERATION EQUIPMENT
Project No.06-ES5564
Date: Aug.2006

INSTRUMENT SPECIFICATION SHEETS INDEX

Item No.	EQUIPMENT DESCRIPTION	ASSOC TAG No. IDENTIFIERS	ISS No. ISS-	NUMBER OF SHEETS	REVISION No.
1	HARDNESS MONITOR	AE/AT	A-1	1	0
2	GAS DETECTION	AE/AT	A-2	1	0
3	ELECTRIC VALVE ACTUATOR	FV	C-1	2	0
4	MAGNETIC FLOWMETER	FE/FIT	F-1	2	0
5	ULTRASONIC LEVEL TRANSMITTER	LE/LIT	L-1	2	0
6	REMOTE ON DEMAND LEVEL TRANSMITTER	LE/LIT	L-2	2	0
7	VIBRATION LEVEL SWITCH	LS	LS-1	2	0
8	FLOAT TYPE LEVEL SWITCH	LS	LS-2	1	0
9	PRESSURE INDICATOR	PI	PI-1	2	0
10	SOLENOID VALVES	FV	SV-1	2	0
11	TEMPERATURE TRANSMITTER	TE/TT	T-1	2	0
12	ALARM BEACON	XA	XA-1	2	0

Earth Tech (Canada) Inc.

Reviewed for general conformance with design intent. Responsibility for detailed design in the shop drawings rests with the Contractor.

Responsibility for verification and correlation of field dimensions, fabrication process, techniques of construction, installation and coordination of all parts of the work rests with the Contractor.

REVIEWED _____
REVIEWED AS MODIFIED ✓
REVISE AND RE-SUBMIT _____
NOT REVIEWED _____
Project No. C28/16/79538
Date: 11/9/06 By: M. Foulsen

Metcon Sales & Engineering
PROJECT NAME: CITY OF WINNIPEG
ONSITE HYPOCHLORITE GENERATION EQUIPMENT
Project No.06-ES5564
Date: Jan. 2007

HARDNESS MONITOR

ISS-A-1 Rev.2

	1	**MANUFACTURER**	HACH
	2	**MODEL No.**	APA 6000 Low Range
	3	**TYPE**	COLORIMETRIC
	4		
	5	**TAG No.**	AE/AT J001B
	6	**RANGE**	0.05 to 10 ppm
G	7	**CYCLE TIME**	4 min.
E	8	**CALIBRATION CYCLE**	35 min.
N	9	**ENCLOSURE RATING**	NEMA 4X
E	10	**ENCLOSURE MATERIAL**	Plastic
R	11	**OPERATING TEMPERATURE**	5 to 50 Gr.C
A	12	**INLET PRESSURE**	36 to 700 Kpa
L	13	**SAMPLE FILTER INLET**	6mm (1/4") NPT male or female
	14	**DRAIN FITTING**	12mm (1/2") NPT barbed hose fitting
	15	**ACCURACY**	+/- 5% of reading or +/-0.05ppm
			whichever is greater
	16	**REPEATABILITY**	+/- 3% of reading or +/- 0.03ppm
			whichever is greater
	17	**ANALOG OUTPUTS**	Two 4-20 mA
	18	**ALARMS**	Two SPDT relays (rated 5 Amps at 230 VAC)
	19	**POWER SUPPLY**	120 VAC / 60 Hz
	20	**CERTIFICATION**	NRTL certified to CSA and UL

Earth Tech (Canada) Inc.

Reviewed for general conformance with design intent. Responsibility for detailed design in the shop drawings rests with the Contractor.

Responsibility for verification and correlation of field dimensions, fabrication process, techniques of construction, installation and coordination of all parts of the work rests with the Contractor.

REVIEWED ✓
REVIEWED AS MODIFIED
REVISE AND RE-SUBMIT
NOT REVIEWED
Project No. 79535-C28-16
Date: 31/1/07 By: M. Jordan

Metcon Sales & Engineering
PROJECT NAME: CITY OF WINNIPEG
ONSITE HYPOCHLORITE GENERATION EQUIPMENT
Project No.06-ES5564
Date: Aug.2006

GAS DETECTION

ISS-A-2

	1	**MANUFACTURER**	~~CROWNCON~~ CROWCON
	2	**MODEL No.**	Flamgard Plus
	3	**TYPE**	Flammable gas detector
SENSOR	4		
	5	**TAG No.**	See page 2
	6	**TYPE**	Catalytic bead
	7	**MATERIAL**	316SS
	8		
	9		
TRANSMITTER	10	**TAG No.**	See page 2
	11	**MODEL No.**	Flamgard Plus
	12	**OUTPUT**	4-20 mA
	13	**LOCAL DISPLAY**	3-digit LCD
	14	**ENCLOSURE RATING**	IP65
	15	**ENCLOSURE MATERIAL**	Marine Grade Alloy
	16	**REPEATABILITY**	+/- 2% FSD
	17	**AMBIANT TEMPERATURE**	-10 to +50 Gr.C
	18	**CALIBRATION METHOD**	Via magnetically operated buttons
	19	**POWER SUPPLY**	10-30 VDC, 210 mA
	20	**APPROVALS**	ULC Class 1 Div.1 Groups B,C,D

NOTE

CROWCON RECOMMEND THE USE OF A COLLECTOR CONE FOR LIGHTER THAN AIR GASES, PLEASE SUPPLY.

Metcon Sales & Engineering
PROJECT NAME: CITY OF WINNIPEG
ONSITE HYPOCHLORITE GENERATION EQUIPMENT
Project No.06-ES5564
Date: Aug.2006

GAS DETECTION

ISS-A-2A

Item	INST. TAG No.	DESCRIPTION	P&ID DWG No.	TRANSMITTER MODEL No.	Output	SERVICE DATA			
						Gas	Eng Units	LEVEL	
								High	High High
1	AE/AIT J450A	Cells Area	CPG0465-I-01-4	Flamgard Plus	4-20 mA	Hydrogen	ppm	1%	2%
2	GE/~~GIT~~ J550A	Sodium Hypochlorite Tanks Area	CPG0465-I-01-5	Flamgard Plus	4-20 mA	Hydrogen	ppm	1%	2%

AE/AIT

Metcon Sales & Engineering
PROJECT NAME: CITY OF WINNIPEG
ONSITE HYPOCHLORITE GENERATION EQUIPMENT
Project No.06-ES5564
Date: Aug.2006

ELECTRIC VALVE ACTUATOR

ISS-C-1

	1	**MANUFACTURER**	Chemline
	2	**MODEL No.**	See page 2
	3	**TYPE**	Reversible Rotory Unit
A	4	**TAG No.**	See page 2
C	5	**VOLTAGE**	120 VAC / 60 Hz
T	6	**HOUSING MATERIAL**	Plastic
U	7	**HOUSING RATING**	NEMA 4X
A	8	**TORQUE**	300 in.lb
T	9	**LIMIT SWITCHES**	2 (for Open and Close)
O	10	**APPROVALS**	CSA
R	11		
P	12		
R	13	**VALVE TYPE**	Ball Isolation Valve
O	14	**VALVE SERVICE**	Sodium Hypochlorite 0.8%
C	15	**VALVE SIZE**	See page 2
E	16		
S	17		
S	18		

Metcon Sales & Engineering
PROJECT NAME: CITY OF WINNIPEG
ONSITE HYPOCHLORITE GENERATION EQUIPMENT
Project No.06-ES5564
Date: Aug.2006

ELECTRIC VALVE ACTUATOR

ISS-C-1A

Item	INST. TAG No.	DESCRIPTION	P&ID DWG No.	MODEL No.	ACTUATOR ACTION	LINE SIZE mm	LIMIT SWITCH	CONTROL MODE
1	FV J600A	Sodium Hypo Dosing System	06-ES5564-P01	QB1T020-2LS	OPEN/CLOSE	50	YES	HAND/OFF/AUTO
2	FV J620A	Sodium Hypo Dosing System	06-ES5564-P01	QB1T020-2LS	OPEN/CLOSE	50	YES	HAND/OFF/AUTO
3	FV J640A	Sodium Hypo Dosing System	06-ES5564-P01	QB1T020-2LS	OPEN/CLOSE	50	YES	HAND/OFF/AUTO
4	FV J660A	Sodium Hypo Dosing System	06-ES5564-P01	QB1T020-2LS	OPEN/CLOSE	50	YES	HAND/OFF/AUTO
5	FV J665A	Sodium Hypo Dosing System	06-ES5564-P01	QB1T020-2LS	OPEN/CLOSE	25	YES	HAND/OFF/AUTO

Metcon Sales & Engineering
PROJECT NAME: CITY OF WINNIPEG
ONSITE HYPOCHLORITE GENERATION EQUIPMENT
Project No.06-ES5564
Date: Aug.2006

MAGNETIC FLOWMETERS

ISS-F-1

	1	**MANUFACTURER**	ABB
	2	**MODEL No.**	See page 2
	3	**TYPE**	Electro Magnetic Flowmeter
ELEMENT	4	**TAG No.**	See page 2
	5	**SERVICE**	See page 2
	6	**LINE SIZE**	See page 2
	7	**CONNECTION TYPE**	Flanged
	8	**CONNECTION RATING**	150 lb.
	9	**CONNECTION MATERIAL**	Carbon Steel
	10	**TUBE MATERIAL**	316SS
	11	**LINING MATERIAL**	See page 2
	12	**ELECTRODE MATERIAL**	See page 2
	13	**PROTECTION CLASS**	IP 67 (NEMA 6)
	14	**FINISH**	Painted
TRANSMITTER	15	**TAG No.**	See page 2
	16	**MOUNTING**	Integral
	17	**OUTPUT**	4-20 Ma
	18	**INDICATOR TYPE**	LCD
	19	**INDICATOR RANGE**	Engineering Units
	20	**ENGINEERING UNITS**	See page 2
	21	**MAX VELOCITY**	See page 2
	22	**TOTALIZER PULSE OUTPUT**	See page 2
	23	**AREA CLASIFICATION**	See page 2
	24	**FINISH**	Standard Enamel
	25	**POWER SUPPLY**	120VAC / 60 Hz
	26	**APPROVALS**	CSA
	27	**ENCLOSURE**	NEMA 4

NOTE

*1) ENSURE THAT PULSE O/P IS INCLUDED FOR FLOW TOTAL COUNT TO PLC.

2) WHY ARE THERE 2 DIFFERENT MODELS USED.

Metcon Sales & Engineering
PROJECT NAME: CITY OF WINNIPEG
ONSITE HYPOCHLORITE GENERATION EQUIPMENT
Project No.06-ES5564
Date: Aug.2006

MAGNETIC FLOWMETERS

ISS-F-1A

Item	INST. TAG No.	DESCRIPTION	P&ID DWG No.	TRANSM. MODEL No.	SENSOR TAG No.	SENSOR MODEL No	LINING MATERIAL	ELECTRODE MATERIAL	TOTAL PULSE	LINE SIZE	PROCESS DATA FLUID	PROCESS DATA FLOW (L/hr)
1	FIT J001A	Water Softening System	CPG0465-I-01-3	EH130311	FE J001A	MFE500314	Elastomer	316 SS	Yes	50	Water	11,000
2	FIT J600A	Sodium Hypo Dosing System	06-ES5564-P01	COPA-XE	FE J600A	FXE 4000	PTFE	Hasteloy C4	Yes	50	Sodium Hypo	10,500
3	FIT J620A	Sodium Hypo Dosing System	06-ES5564-P01	COPA-XE	FE J600A	FXE 4000	PTFE	Hasteloy C4	Yes	50	Sodium Hypo	10,500

Metcon Sales & Engineering
PROJECT NAME: CITY OF WINNIPEG
ONSITE HYPOCHLORITE GENERATION EQUIPMENT
Project No.06-ES5564
Date: Aug.2006

ULTRASONIC LEVEL TRANSMITTER

ISS-L-1

	1	**MANUFACTURER**	Siemens Milltronics
	2	**MODEL No.**	MultiRanger
	3	**TYPE**	Non - Contact Ultrasonic
GENERAL	4	**SERVICE**	See page 2
	5	**TANK TYPE**	See page 2
	6	**TANK MATERIAL**	FRP
	7	**AGITATION (Y or N)**	No
	8	**CABLE TYPE**	2-core copper conductor,twisted
	9	**CABLE LENGTH**	30 m
	10		
SENSOR	11		
	12	**TAG No.**	See page 2
	13	**MODEL No.**	ST-H
	14	**CONNECTION TYPE**	50mm thread
	15	**SENSOR MATERIAL**	Base and Lid made of ETFE
	16		
TRANSMITTER	17	**TAG No.**	See page 2
	18	**OUTPUT**	4-20 mA
	19	**ENCLOSURE RATING**	NEMA 4X
	20	**ENCLOSURE MATERIAL**	Polycarbonate
	21	**LOCAL DISPLAY**	LCD
	22	**ACCURACY**	0.25% of range or 6 mm whichever is greater
	23	**AMBIANT TEMPERATURE**	-20 to +50 Gr.C
	24	**ALARM CONTACTS**	2 Form "A" / 1 Form"C" - rating 5A at 250VAC
	25	**POWER SUPPLY**	120VAC / 60 Hz
	26	**APPROVALS**	CSA
	27		
PROCESS	28		
	29	**FLUID LOWER**	See page 2
	30	**FLUID UPPER**	Air
	31	**PRESSURE**	Atmospheric
	32	**TEMPERATURE**	10-25 Gr.C
	33		
	34		

1) NOT CLEAR HERE HOW TRANSDUCER IS MOUNTED. INSIDE OF STORAGE TANKS IS ZONE 1, THEREFORE FOLLOW DIRECTIONS IN MANUALS ETC FOR MOUNTING INSTRUCTIONS.

Metcon Sales & Engineering
PROJECT NAME: CITY OF WINNIPEG
ONSITE HYPOCHLORITE GENERATION EQUIPMENT
Project No.06-ES5564
Date: Aug.2006

ULTRASONIC
LEVEL TRANSMITTER

ISS-L-1A

Item	INST. TAG No.	DESCRIPTION	P&ID DWG No.	TRANSMITTER MODEL No.	SENSOR TAG No.	SENSOR MODEL	PROCESS DATA			
							FLUID	TANK m	LEVEL MIN	MAX
1	LIT J100A	Brine Tank TK-J100A	CPG0465-I-01-3	200	LE J100A	ST-H	Brine	5.15	0.2	4
2	LIT J200A	Brine Tank TK-J200A	CPG0465-I-01-3	200	LE J200A	ST-H	Brine	5.15	0.2	4
3	LIT J500A	Sodium Hypo Tank TK-J500A	CPG0465-I-01-5	200	LE J500A	ST-H	Sodium Hypo	8.96	0.2	8
4	LIT J520A	Sodium Hypo Tank TK-J520A	CPG0465-I-01-6	200	LE J520A	ST-H	Sodium Hypo	8.96	0.2	8
5	LIT J540A	Sodium Hypo Tank TK-J540A	CPG0465-I-01-6	200	LE J540A	ST-H	Sodium Hypo	8.96	0.2	8
6	LIT J560A	Sodium Hypo Tank TK-J560A	CPG0465-I-01-6	200	LE J560A	ST-H	Sodium Hypo	8.96	0.2	8

Metcon Sales & Engineering

PROJECT NAME: CITY OF WINNIPEG

ONSITE HYPOCHLORITE GENERATION EQUIPMENT

Project No.06-ES5564

Date: Aug.2006

REMOTE ON DEMAND LEVEL TRANSMITTER

ISS-L-2

	1	**MANUFACTURER**	BinMaster
	2	**MODEL No.**	SmartBob II
	3	**TYPE**	Remote on Demand
GENERAL	4		
	5	**SERVICE**	Salt
	6	**TANK HEIGHT**	5.15 m
	7	**TANK MATERIAL**	FRP
	8	**AGITATION (Y or N)**	No
	9		
	10		
REMOTE UNIT	11	**TAG No.**	See page 2
	12	**MODEL No.**	SBR II
	13	**ACCURACY**	0.25 %
	14	**ENCLOSURE MATERIAL**	Polypropylene
	15	**ENCLOSURE RATING**	NEMA 4X
	16	**CABLE TYPE**	316 SS, 1.6 mm dia. Nylon Coated
	17	**CABLE LENGTH**	5 m
	18	**TEMPERATURE**	-45 to +85 Gr.C
	19	**POWER SUPPLY**	120VAC / 60 Hz
	20	**APPROVALS**	Class II, Div. 1, Groups E, F, G
	21		
REMOTE START UNIT	22		
	23		
	24		
	25		
	26	**TAG No.**	See page 2
	27	**MODEL No.**	RSU-1
	28	**OUTPUT**	4-20 mA
	29	**ENCLOSURE RATING**	NEMA 4X
	30	**ALARM CONTACTS**	2 Form "A" / 1 Form"C" - rating 5A at 250VAC
	31	**POWER SUPPLY**	16 VAC
	32	**APPROVALS**	ULC
	33		
	34		
	35		
	36		
	37		
	38		

Metcon Sales & Engineering
PROJECT NAME: CITY OF WINNIPEG
ONSITE HYPOCHLORITE GENERATION EQUIPMENT
Project No.06-ES5564
Date: Aug.2006

ISS-L-2A

REMOTE ON DEMAND
LEVEL TRANSMITTER

Item	INST. TAG No.	DESCRIPTION	P&ID DWG No.	REMOTE UNIT TAG No.	REMOTE UNIT MODEL	PROCESS DATA			
						SERVICE	TANK m	LEVEL MIN	LEVEL MAX
1	LIT J100B	Brine Tank TK-J100A	CPG0465-I-01-3	LE J100A	SBR II	Salt	5.15	1	5.15
1	LIT J200B	Brine Tank TK-J200A	CPG0465-I-01-3	LE J200A	SBR II	Salt	5.15	1	5.15

Metcon Sales & Engineering

PROJECT NAME: CITY OF WINNIPEG

ONSITE HYPOCHLORITE GENERATION EQUIPMENT

Project No.06-ES5564

Date: Aug.2006

VIBRATION LEVEL SWITCH

ISS-LS-1

	1	**MANUFACTURER**	Endress & Hauser
	2	**MODEL No.**	Liquiphant FLT50H
	3	**TYPE**	Vibration
S	4	**SERVICE**	Brine
W	5	**DESIGN**	Compact
I	6	**ACTUATION**	High
T	7	**SWITCH MOUNTING**	25 mm Flange
C	8	**PROBE LENGTH**	66.5 mm
H	9	**TUNING FORK MATERIAL**	316 SS
	10	**HOUSING MATERIAL**	Polycarbonate
	11	**PROCESS TEMPERATURE**	-50 to +150 gr.C
	12	**PRESSURE**	up to 10,000 Kpa
E	13		
L	14		
E	15	**MODEL No.**	FEL 54
C	16	**RELAYS OUTPUT**	2 Relays
T	17	**CABLE ENTRY**	12 mm NPT
R	18	**DEGREE OF PROTECTION**	NEMA 4X
O	19	**POWER SUPPLY**	24 VDC
N	20	**APPROVALS**	CSA
I	21		
C	22		
S	23		

Metcon Sales & Engineering
PROJECT NAME: CITY OF WINNIPEG
ONSITE HYPOCHLORITE GENERATION EQUIPMENT
Project No.06-ES5564
Date: Aug.2006

VIBRATION LEVEL SWITCH

ISS-LS-1A

Item	INST. TAG No.	DESCRIPTION	P&ID DWG No.	ELECTRONICS MODEL No.	ACTUATION	SERVICE LIQUID
1	LS J100A	Brine Tank TK-J100A	CPG0465-I-01-3	FEL 54	High	Brine
2	LS J200A	Brine Tank TK-J200A	CPG0465-I-01-3	FEL 54	High	Brine

Metcon Sales & Engineering

PROJECT NAME: CITY OF WINNIPEG

ONSITE HYPOCHLORITE GENERATION EQUIPMENT

Project No.06-ES5564

Date: Aug.2006

PRESSURE INDICATORS

ISS-PI-1

GAUGE	1	**MANUFACTURER**	Ashcroft
	2	**TAG No.**	See page 2
	3	**MODEL No.**	45 1279 AA 04L
	4	**TYPE**	C-Tube
	5	**BOURDON TUBE MATERIAL**	Bronze
	6	**SOCKET MATERIAL**	Brass
	7	**INSTRUMENT CONNECTION**	12 mm
	8	**DIAL SIZE**	114 mm
	9	**LIQUID-FILLED**	Glycerine
	10	**ACCURACY**	+/- 0.5%
	11	**PRESSURE RANGE**	0-1100KPa (0 - 160psi)
ISOLATOR	12	**MANUFACTURER**	Chemline
	13	**MODEL No.**	SIA005005PG
	14	**BODY MATERIAL**	PVC
	15	**DIAPHRAGM**	Teflon PTFE bonded EPDM
	16	**INLET SIZE**	12 mm
	17	**INSTRUMENT CONNECTION**	12 mm
	18	**WORKING PRESSURE**	1035 Kpa (150 psi)
	19		

Metcon Sales & Engineering
PROJECT NAME: CITY OF WINNIPEG
ONSITE HYPOCHLORITE GENERATION EQUIPMENT
Project No.06-ES5564
Date: Aug.2006

PRESSURE INDICATORS

ISS-PI-1A

Item	INST. TAG No.	DESCRIPTION	P&ID DWG No.	SERVICE MODEL	PROCESS DATA PRESSURE		GAUGE RANGE
					MIN	MAX	
1	PI J600A	Sodium Hypo Pump P J600A	06-ES5564-P01	Sodium Hypo 0.8%	0	349 KPa	0 to 1100 KPa
2	PI J620A	Sodium Hypo Pump P J620A	06-ES5564-P01	Sodium Hypo 0.8%	0	349 KPa	0 to 1100 KPa
3	PI J640A	Sodium Hypo Pump P J640A	06-ES5564-P01	Sodium Hypo 0.8%	0	349 KPa	0 to 1100 KPa
4	PI J660A	Sodium Hypo Pump P J660A	06-ES5564-P01	Sodium Hypo 0.8%	0	349 KPa	0 to 1100 KPa

Metcon Sales & Engineering

PROJECT NAME: CITY OF WINNIPEG

ONSITE HYPOCHLORITE GENERATION EQUIPMENT

Project No.06-ES5564

Date: Aug.2006

SOLENOID VALVES

ISS-SV-1

GENERAL	1	**MANUFACTURER**	ASCO
	2	**MODEL No.**	8210G100
	3	**TYPE**	Pilot operated
	4	**SERVICE**	Water
	5	**TAG No.**	See page 2
	6		
	7		
VALVE BODY	8		
	9		
	10	**TYPE**	2-way
	11	**BODY SIZE**	50 mm
	12	**ORIFICE SIZE**	44 mm
	13	**BODY MATERIAL**	Brass
	14	**SPRING MATERIAL**	302 SS
	15		
	16		
	17		
PROCESS	18		
	19	**MIN. OPERATING DIFFERENTIAL**	30 KPa
	20	**MAX. OPERATING DIFFERENTIAL**	900 KPa
	21	**TEMPERATURE RANGE**	0 to 52 gr.C
	22	**Kv FLOW FACTOR**	36.86
	23		
	24		
SOLENOID	25		
	26		
	27	**ENCLOSURE**	NEMA 4X
	28	**VOLTAGE**	120VAC / 60Hz
	29	**SHADING COIL MATERIAL**	Copper
	30	**APPROVALS**	CSA
	31		
	32		

Metcon Sales & Engineering
PROJECT NAME: CITY OF WINNIPEG
ONSITE HYPOCHLORITE GENERATION EQUIPMENT
Project No.06-ES5564
Date: Aug.2006

ISS-SV-1A

SOLENOID VALVES

Item	INST. TAG No.	DESCRIPTION	P&ID DWG No.	MODEL No.	INPUT SIGNAL	ACTION N/O - N/C	SERVICE
1	FV J100A	Brine Tank TK-J100A	CPG0465-I-01-3	8210G100	120VAC	N/C	Water
2	FV J200A	Brine Tank TK-J200A	CPG0465-I-01-3	8210G100	120VAC	N/C	Water

Metcon Sales & Engineering

PROJECT NAME: CITY OF WINNIPEG

ONSITE HYPOCHLORITE GENERATION EQUIPMENT

Project No.06-ES5564

Date: Aug.2006

TEMPERATURE TRANSMITTER

ISS-T-1

	1	**MANUFACTURER**	ABB
	2	**MODEL No.**	SensyTEMP Quick
	3	**TYPE**	RTD and integral transmitter
E	4	**TAG No.**	See page 2
L	5	**MODEL No.**	sENSYtEMP Quick V10711331
E	6	**SERVICE**	Brine
M	7	**ELEMENT TYPE**	RTD, 3 wire
E	8	**MOUNTING**	Tank Wall
N	9	**RESISTANCE**	100 Ohms @ 0 gr.C
T	10	**MATERIAL**	SS
	11	**DEGREE OF PROTECTION**	IP67 (NEMA 6)
T	12		
R	13		
A	14	**TAG No.**	See page 2
N	15	**OUTPUT**	4-20 mA, temperature linear
S	16	**AMBIANT TEMPERATURE**	-20 to +100 gr.C
M	17	**AMBIANT TEMPERATURE**	-45 to +85 gr.C
I	18	**POWER SUPPLY**	24 VDC
T	19	**DEGREE OF PROTECTION**	IP67 (NEMA 6)
T	20	**APPROVALS**	CSA
E	21		
R	22		

Metcon Sales & Engineering
PROJECT NAME: CITY OF WINNIPEG
ONSITE HYPOCHLORITE GENERATION EQUIPMENT
Project No.06-ES5564
Date: Aug.2006

TEMPERATURE TRANSMITTER

ISS-T-1A

Item	INST. TAG No.	DESCRIPTION	P&ID DWG No.	SENSOR TAG No.	SENSOR MODEL	PROCESS DATA		
						FLUID	TEMPERATURE	
							MIN	MAX
1	TT J100A	Brine Tank TK-J100A	CPG0465-I-01-3	TT J100A	V10711331	Brine	0.5	25
2	TT J200A	Brine Tank TK-J100A	CPG0465-I-01-3	TT J200A	V10711331	Brine	0.5	25

Metcon Sales & Engineering

PROJECT NAME: CITY OF WINNIPEG

ONSITE HYPOCHLORITE GENERATION EQUIPMENT

Project No.06-ES5564

Date: Aug.2006

ALARM BEACON

ISS-XA-1

	1	**MANUFACTURER**	Tork
	2	**MODEL No.**	Tork Alert TA52 N5
	3	**TYPE**	Rotating Beacon
	4	**NOMINAL VOLTAGE**	120VAC/60 Hz - 0.36 Amps
E	5		
L	6	**TAG No.**	See page 2
E	7	**FEATURES**	See page 2
M	8	**COLOR**	Red
E	9	**MATERIAL**	Cast Aluminium Alloy
N	10	**TEMPERATURE**	See page 2
T	11	**APPROVALS**	See page 2

Metcon Sales & Engineering
PROJECT NAME: CITY OF WINNIPEG
ONSITE HYPOCHLORITE GENERATION EQUIPMENT
Project No.06-ES5564
Date: Aug.2006

ISS-XA-1A

ALARM BEACON

Item	INST. TAG No.	DESCRIPTION	P&ID DWG No.	MODEL No.	MOUNTING	AREA LOCATION	COLOR	AREA CLASSIFICATION	TEMPERATURE RANGE
1	XA J100A	Indoor Alarm Beacon	CPG0465-I-01-4	Tork Alert-TA52EX*N5	In any angle position	Indoor	Red	ULC, Class 1,Div 1	0 to +50 Gr. C.
2	XA J200A	Outdoor Alarm Beacon	CPG0465-I-01-3	Tork Alert-TA52*N5	Vertically with base at bottom	Outdoor	Red	NEMA 4X	-10 to +50 Gr. C.

BILL OF MATERIALS

METCON SALES & ENGINEERING LIMITED

JOB NAME: **CITY OF WINNIPEG**
JOB NUMBER: **06-ES5564**
DATE: **AUGUST 15, 2006**

INSTRUMENTATION

BILL OF MATERIALS:

1. ELECTROMAGNETIC FLOWMETER

Qty. One(1) ***Electromagnetic Flowmeter***

Tags: FE/FIT J001A,

- Manufacturer:	ABB
- Model:	Magmaster
- Type:	Electromagnetic

Element:

- Model:	MFE50034181XX4EH
- Service:	Water
- Line Size:	50 mm
- Connection Type:	Flange
- Connection Rating:	150lb.
- Flange material:	Carbon Steel
- Tube Material:	SS
- Lining Material:	Suitable for potable water
- Electrodes Material:	316 SS
- Built in grounding electrodes:	Grounding rings are not required
- Protection Class:	IP67 (NEMA 6)
- Approval:	NSF
- Fluid Temperature:	-25 to +130 gr. C
- Weight:	10 kg
- Length:	200 mm

Transmitter:

- Model:	EH130311
- Mounting:	Integral
- Housing Material:	Glass-loaded polypropylene
- Analogue Output:	4-20 mA
- Totalizer Pulse Output:	Yes
- Measuring Range:	0 to 20,000 L/hr
- Power Supply	120 VAC / 60Hz
- Electrical connections:	12mm (1/2") NPT
- Display:	2-line display
- Accuracy:	0.15% of range
- Ambient Temperature:	-20 to +60 gr.C
- Protection Class:	IP65 (NEMA 4)
- Approval:	CSA
- Dimensions:	242.5 mm L x 161.5 H x 70 mm D

METCON SALES & ENGINEERING LIMITED
JOB NAME: **CITY OF WINNIPEG**
JOB NUMBER: **06-ES5564**
DATE: **JANUARY 17, 2007**

INSTRUMENTATION
REVISION 2
BILL OF MATERIALS:

2. **HARDNESS MONITOR**

Qty. One(1) ***HARDNESS MONITOR***
Tag: AE/AT J001B

- Manufacturer:	Hach
- Model:	APA 6000 Low Range
- Analysis method:	Colorimetric
- Range:	0.05 to10 ppm (expressed as mg/L CaCO3)
- Accuracy:	+/- 5% of reading or +/- 0.05ppm whichever is greater
- Repeatability:	+/- 3% of reading or +/- 0.03ppm whichever is greater
- Cycle Time:	4 min.
- Analog Outputs:	Two 4-20 mA
- Alarms:	Two SPDT relay (rated 5 amps at 230 VAC)
- Weight:	25.5 Kg
- Dimensions:	627 mm (L) x 522 mm (H) x 527 mm (D)
- Enclosure:	Plastic
- Enclosure rating:	NEMA 4X
- Sample Filter Inlet :	6 mm (1/4") NPT male or female
- Drain Fitting:	12 mm (1/2") NPT barbed hose fitting
- Operating Temperature:	5 to 50 gr. C
- Inlet Pressure:	36 to 700 KPa (2.5 to 100 psi)
- Power:	120 VAC/60 Hz
- Certification:	NRTL certified to CSA and UL

- C/w installation kit
- C/w maintenance kit
- C/w One month supply of reagents

3. SOLENOID VALVES

Qty. Two(2) ***SOLENOID VALVES***

Tags: FV J100A - Brine Tank TK-J100A
FV J200A - Brine Tank TK-J200A

- Manufacturer:	ASCO-Red Hat
- Model:	8210G100
- Type :	2-way Pilot Operated
- Service:	Water
- Body Size:	50 mm
- Orifice Size:	44 mm
- Body Material:	Brass
- Spring Material:	302 SS
Process:	
- Min. Operating Diff.:	30KPA
- Max. Operating Diff.:	900KPA
- Temperature Range:	0 to +52 Celsius
- Kv Factor:	36.86
Solenoid:	
- Enclosure:	NEMA 4X
- Voltage:	120VAC / 60 Hz
- Action:	N/C Normally Closed
- Approvals:	CSA

4. SALT LEVEL TRANSMITTERS

Qty. Two (2) ***LEVEL TRANSMITTER***

Tags: LE/LIT J100B - Brine Tank TK-J100A
LE/LIT J200B - Brine Tank TK-J200A

- Manufacturer:	BinMaster
- Model:	Smart Bob II
- Type:	Remote on demand level measurement unit

Smart Bob Remote Unit:

- Model:	SBR II
- Measuring Range:	27.5 m
- Measuring principle:	SBR II lowers a weighted Bob to the surface of the salt, measuring the distance. Slack in the cable is detected when the Bob reaches the surface, causing the motor to reverse and retract the Bob. The retract distance is also measured for diagnostic purposes to assure that the Bob fully retracts.
- Power requirements:	120VAC / 60Hz
- Power Consumption:	12 VA Continuous, 48 VA Intermittent
- Current Draw:	0.1 A Continuous, 0.4 A Intermittent
- Temperature:	- 40 to +85 Celsius
- Accuracy:	0.25%
- Repeatability:	0.03 m
- Resolution:	0.4 cm
- Communication:	RS485 Half Duplex
- Wiring Distance:	1220 m
- Enclosure Material:	Polypropylene
- Enclosure:	NEMA 4X
- Mounting:	75 mm (3") Floor Flange
- Conduit Entry:	19 mm (3/4") NPT
- Weight:	11.35 kg
- Width:	400 mm
- Height:	375 mm
- Depth:	190 mm
- Air Purge Entry:	6 mm (1/4") NPT
- Cable:	5 m, 316 SS 1.6 mm Diameter, Nylon Coated
- Approvals:	Class II, Div. 1, Groups E, F, G

Smart Bob Remote Start Unit:

- Model:	RSU-1
- Power requirements:	16VAC (From a transformer 120VAC / 16 VAC)
- Communication with SBR II:	RS485 Half Duplex
- Wiring Distance:	1220 m
- RS485 Cable:	Twisted pair with shield
- Enclosure:	NEMA 4X
- Approvals:	ULC
- Analogue Output:	4-20 mA

- C/w one (1) Wall Transformer 120VAC/16VAC

5. BRINE LEVEL SWITCHES

Qty. Two(2) ***LEVEL SWITCHES***

Tags: LS J100A - Brine Tank TK-J100A
LS J200A - Brine Tank TK-J200A

- Manufacturer:	Endress & Hauser
- Model:	Liquiphant FLT50 H
- Measuring principle:	Vibration

Switch

- Service:	Brine
- Design:	Compact
- Process Temperature:	-50 to +150 gr.C
- Pressure:	up to 10,000KPa
- Actuation:	High
- Switch Mounting:	25 mm flange
- Probe length:	66.5 mm
- Tuning fork material:	316 SS
- Weight:	- 1 kg
- Material (housing):	- Polycarbonate

Electronics:

- Model:	FEL 54
- Relays Output:	2 Relays
- Degree of Protection	NEMA 4X
- Cable Entry:	12mm (1/2") NPT
- Housing length:	141 mm
- Power Supply:	24 VDC
- Approvals:	CSA,

6. BRINE TEMPERATURE TRANSMITTERS

Qty. Two(2) ***TEMPERATURE TRANSMITTERS***

Tags: TE/TT J100A - Brine Tank TK-J100A
TE/TT J200A - Brine Tank TK-J200A

- Manufacturer:	ABB
- Model:	SensyTemp Quick V10711331
- Type:	RTD and integral transmitter

Element:

- Type:	RTD, 3 wire
- Mounting:	Tank Wall
- Resistance:	100 Ohms @ 0gr.C
- Process Connection:	12 mm(1/2") NPT
- Element length:	150 mm
- Connection End:	Type B,
- Degree of protection:	IP 67 (NEMA 6)
- Cable Entry:	Rapid Connection Technology
- Response Time:	4 Sec
- Material:	- SS

Head Transmitter:

- Output:	4-20 mA, temperature linear
- Power Supply:	24 VDC
- Measuring Range:	-20 to +100 gr.C
- Ambient Temperature:	-45 to +85 gr.C
- Degree of Protection:	IP67
- Approvals:	CSA,

7. ULTRASONIC LEVEL TRANSMITTERS

Qty. Six(6) ***ULTRASONIC LEVEL TRANSMITTER***

Tags: LE/LIT J100A - Brine Tank TK-J100A
LE/LIT J200A - Brine Tank TK-J200A
LE/LIT J500A - Sodium Hypo Tank TK-J500A
LE/LIT J520A - Sodium Hypo Tank TK-J520A
LE/LIT J540A - Sodium Hypo Tank TK-J540A
LE/LIT J560A - Sodium Hypo Tank TK-J560A

- Manufacturer: Siemens - Milltronics
- Model: Multiranger 200
- Measuring principle: Ultrasonic

Transmitter:

- Measuring Range: 0.3 to 15 m
- Analogue Output: 4-20 mA
- Relays Output: 2 Form "A"/ 1 Form "C' – rating 5A at 250VAC
- Accuracy: 0.25% of range or 6mm whichever is greater
- Resolution: 0.1% of range or 2mm whichever is greater
- Temperature compensation: -50 to +150 gr.C
  - Integral temperature sensor
- Installation Condition: - Indoor
- Ambient Temperature: - 20 to +50 Celsius
- Design: - Wall Mounted
- Size: 160 mm (L) x 240 mm (H) x 91 mm (D)
- Weight: - 1.37 kg
- Material (housing): - Polycarbonate
- Degree of Protection (housing): - IP65/NEMA 4X

Electrical Connection:

- Transducer and analogue output signal: 2-core copper conductor, twisted, with shield and drain conductor 0.5 to 0.75mm^2 (22 to 18 AWG)
- Max. separation between transducer and transceiver: 365 m

Display: 100 x 40 mm multi-block LCD with backlighting
Programming: Hand-held programmer
Power Supply: 110VAC/60 Hz/1ph – 36VA (17W)
Approval: CSA

Sensor:

- Model: ST-H
- Range: 0.3 to 10 m
- Measuring principle: Ultrasonic transducer
- Measuring Range: 0.3 to 10 m
- Output: Frequency - 44 kHz
- Beam Angle: 12 Degree
- Temperature compensation: Compensated by Integral temperature sensor

- Pressure:	Normal Atmospheric pressure
- Ambient Temperature:	- 40 to +73 Celsius
- Weight:	1.37 kg
- Material (Enclosure):	Base and lid made of ETFE
- Process Connection:	50 mm (2") NPT
- Degree of Protection (housing):	- IP68
- Cable Connection:	2-core shielded/twisted, 0.5mm^2 (20AWG), PVC sheath
- Cable length:	30 m
- Approvals:	CSA, FM Class 1, Div.1

8. HYDROGEN DETECTORS

Qty. Two(2) ***HYDROGEN DETECTORS***

Tags: AE/AIT J450A - Cells Area
~~GE/GIT~~ AE/AIT J550A - Sodium Hypochlorite Tanks Area

- Manufacturer:	Crowncon	
- Model:	Flamgard Plus	
- Hydrogen Range:	0-100% LEL	
- Size:	200 mm H x 115 mm W x 115 mm D	
- Weight:	2.2 kg	
- Enclosure Material:	Junction Box:	Marine grade alloy
	Sensor housing:	316 SS
- Ingress Protection (housing):	IP65	
- Cable entries:	12 mm (½") NPT	
- Power Supply:	10-30 VDC, 210mA	
- Operating Temperature:	- 10 to +55 Celsius	
- Humidity:	0 to 99% RH non-condensing	
- Display:	3-digit LCD back-lit display	
- Calibration Method:	Via magnetically operated buttons	
- Analogue Output:	4-20 mA (3 wire)	
- Terminals:	Suitable for up to 1.5 mm^2 cable	
- Sensor Type:	Catalytic bead	
- Repeatability:	+/-2 % FSD	
- Zero drift:	+/-2 % FSD, 6 months	
- Response time:	T90< 10 sec, typically	
- Hazardous area zones:	Zone 1 or Zone 2	
- Approval:	ULC Class 1 Div.1 Groups B, C, D	

Qty. One(1) *Hydrogen 2% (50% LEL) 103 Liter*
Qty. One(1) *Regulator 0.5 LPM Male (58 & 103 Liter)*
Qty. One(1) *Calibration Adapter*

9. ALARM BEACONS

Qty. One(1) ***INDOOR BEACON***

Tag: XA J100 A

- Manufacturer:	Tork
- Model:	Tork Alert TA52EX*N5
- Type:	Rotating Beacon
- Dimensions: Height:	343 mm
Diameter:	225 mm
- Mounting:	Operates in any angle position 12mm conduit
- Nominal Voltage:	120 VAC/ 60 Hz - 0.36 Amps
- Flashes per minute:	80-90 FPM
- Color:	Red
- Material:	Body, Base and lens guard- cast aluminium alloy
- Ambient Temperature:	- 15 to +65 Celsius
- Classification:	Class 1, Div. 1, Group C, D

Qty. One(1) ***OUTDOOR BEACON***

Tag: XA J200 A

- Manufacturer:	Tork
- Model:	Tork Alert TA52*N5
- Type:	
- Dimensions: Height:	165 mm
Diameter:	143 mm
- Mounting:	Vertically with base at bottom 12mm conduit
- Nominal Voltage:	120 VAC/ 60 Hz - 0.21 Amps
- Flashes per minute:	80-90 FPM
- Color:	Red
- Dome Material:	Acrylic
- Ambient Temperature:	- 15 to +65 Celsius
- Rating:	NEMA 4X

10. LEVEL SWITCH

Qty. One(1) ***LEVEL SWITCH – Room Containment Area Sump***

Tag: LS J550A

NOT ACCEPTABLE

- Manufacturer:	Flygt
- Model:	ENM-10
- Type:	Float
- Actuation:	High
- Switch mounting:	FRP Stand
- Switch Rest State:	Normally Closed on normal Level
- Liquid Temperature:	0 to +60 gr.C
- Liquid Density:	0.95 to 1.1 g/cm^3
- Weight:	2 kg
- Regulator Length:	162 mm
- Diameter:	100mm
- Materials:	
- Body:	Polypropylene
- Bending Relief:	EPDM rubber
- Cable:	special compound PVC
- Output:	1 Form C relay contact (rated 250 VAC, 10 Amps)
- Degree of Protection	IP68
- Electrical Connection:	Integral Cable
- Cable Length:	20 m
- Approvals:	CSA,

11. FRP STANDS

Qty. Two (2) *FRP Stands (Dwg. 06-ES5564 M-03)*

- One for each Brine Tank
- Height: 1610 mm
- C/w 400 mm x 600 mm HDPE board to accommodate:
  - one (1) Ultrasonic Level Transmitter
  - one (1) Smart Bob Remote Start Unit

Qty. Four (4) *FRP Stands (Dwg. 06-ES5564 M-04)*

- One for each Sodium Hypochlorite Tank
- Height: 1610 mm
- C/w 400 mm x 600 mm HDPE board to accommodate:
  - one (1) Ultrasonic Level Transmitter
  - one (1) Junction Box
  - one (1) Differential Pressure Switch

Qty. One (1) *FRP Stand (Dwg. 06-ES5564 M-05)*

- For the Float Switch , mounted in Room Containment Area Sump
- Height: 510 mm

Earth Tech (Canada) Inc.

Reviewed for general conformance with design intent. Responsibility for detailed design in the shop drawings rests with the Contractor.

Responsibility for verification and correlation of field dimensions, fabrication process, techniques of construction, installation and coordination of all parts of the work rests with the Contractor.

REVIEWED _____

REVIEWED AS MODIFIED ✓

REVISE AND RE-SUBMIT _____

NOT REVIEWED _____

Project No. C28/16/79538

Date: 11/9/06 By: M. Poulsen

MAG MASTER FLOWMETER

Data Sheet
SS/MAG/WW_14

Electromagnetic Flowmeter

MagMaster – Water & Waste Water Version

- **Industry-specific design**
  - suitable for all applications found in the water and waste water industries
- **Widest flow range, highest accuracy**
  - diameters from 15mm to 2200mm (0.5 to 84 in.)
  - sizes up to 2600mm (102 in.) are available to special order
- **Submersible sensor**
  - suitable for flooded chambers and pits
- **Buriable sensor**
  - eliminates chambers and ensures fast, low-cost installation
- **Hazardous area approvals**
  - FM, CSA, ATEX
  - ideal for waste water treatment works
- **Built-in earthing (grounding) electrode**
  - eliminates the need for earthing (grounding) flanges
- **2-year warranty as standard**
  - high-quality product guarantees reliable maintenance-free operation
- **CalMaster compatible**
  - in situ verification of flow meter calibration
- **Remote Communications**
  - including Profibus DP v0

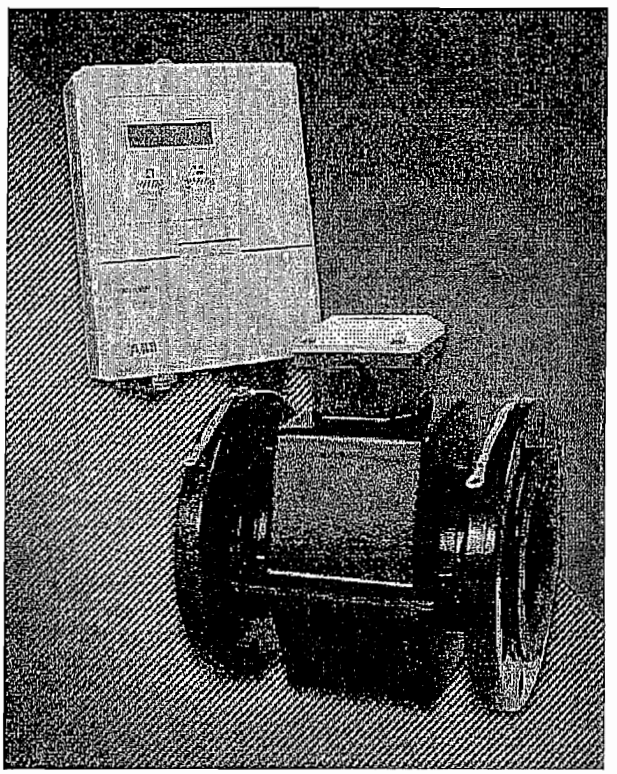

MagMaster – bringing unsurpassed flowmetering performance to the Water and Waste Water industries

ABB

Setting the Standard

Designed specifically to target the diverse applications found in the supply and treatment of both potable and waste water, MagMaster sets new levels of accuracy, reliability and low cost of ownership.

MagMasters ground-breaking design guarantees long-term calibration stability, coupled with the wide range of sizes, 15 to 2600mm (0.5 to 102 in.), choice of lining and electrode material quickly established MagMaster as the de facto industry standard electromagnetic flow meter.

Class-leading Flow Performance

The combination of sensors with ultra-linear magnetics, proven technology, signal processing and sensor drive results in unsurpassed accuracy and an operable flow range of 1500:1. MagMaster's class-leading performance ensures reliable and accurate measurement over the widely varying flow rates, including minimal night flows, which occur in typical water and waste water systems.

Assured Quality

MagMaster is designed and manufactured in accordance with international quality procedures (ISO 9001) and all flowmeters are calibrated on nationally-traceable calibration rigs to provide the end user with complete assurance of both quality and performance of the meter.

Calibration Verification

CalMaster is the world's first in situ calibration verification system. The system allows the calibration of MagMaster electromagnetic flow meters to be verified without the need for 'wet calibration'. The complex series of tests automatically performed by CalMaster is completed and a certificate produced without costly excavation of the sensor or disruption to the water supply. A complete solution to the regulatory requirement for routine verification and traceability of electromagnetic flow meters.

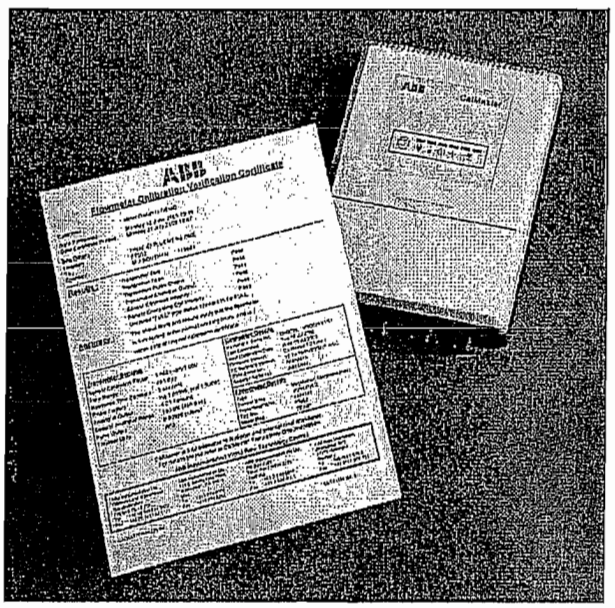

For further information on CalMaster refer to the brochure PB/CALMASTER

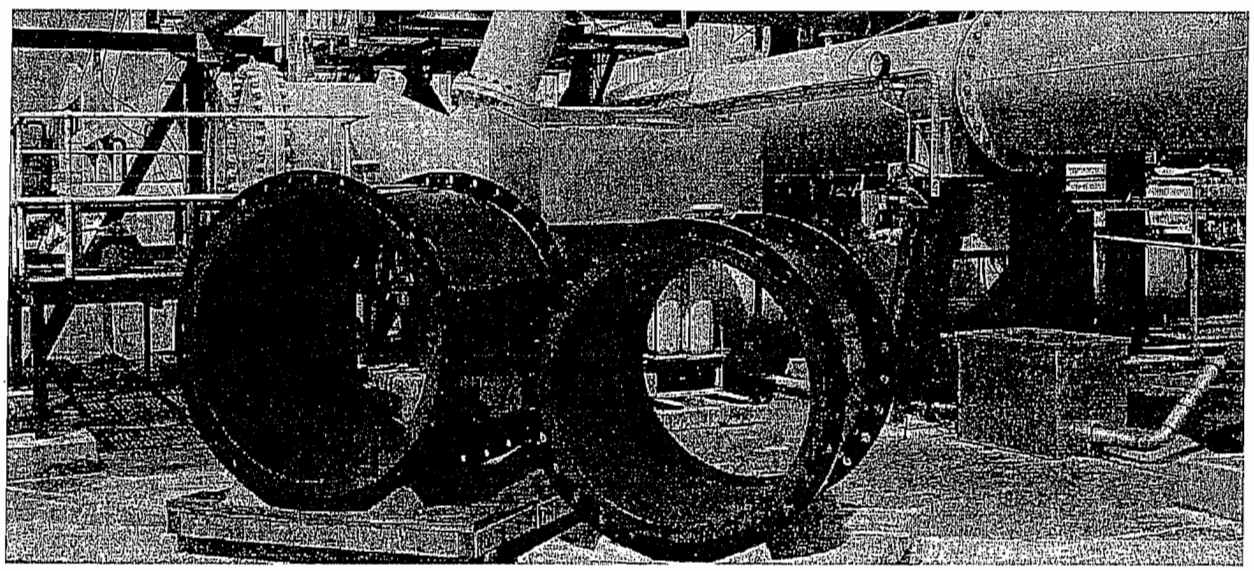

ABB operated national and internationally accredited flow calibration facilities in the UK, USA, Australia, Germany and India.

Electronic Display Unit

- Comprehensive display
- Forward, reverse and net totals
- 4 digital outputs: forward pulse, reverse pulse, alarm 1 and alarm 2
- 2 analog outputs (output 2 optional)
- Communications: serial data (RS232), HART and Profibus DP v0

MagMaster is available with integral or remote transmitters, configuration is achieved either with a configurator of via the optional integral keypad. The software features multi-level password protection to prevent unauthorized configuration changes. In the 2-line display only variant, display data can only be changed using a magnetic wand, no operational parameters can be changed without the use of a configurator and appropriate passwords.

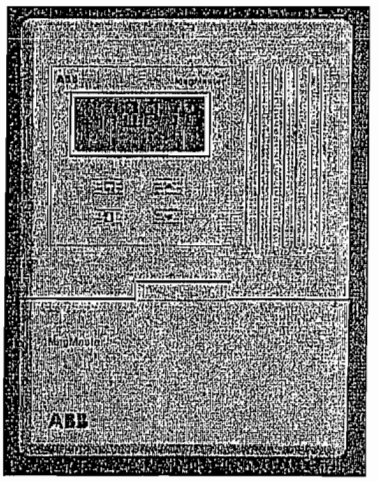

Wall-mount Version

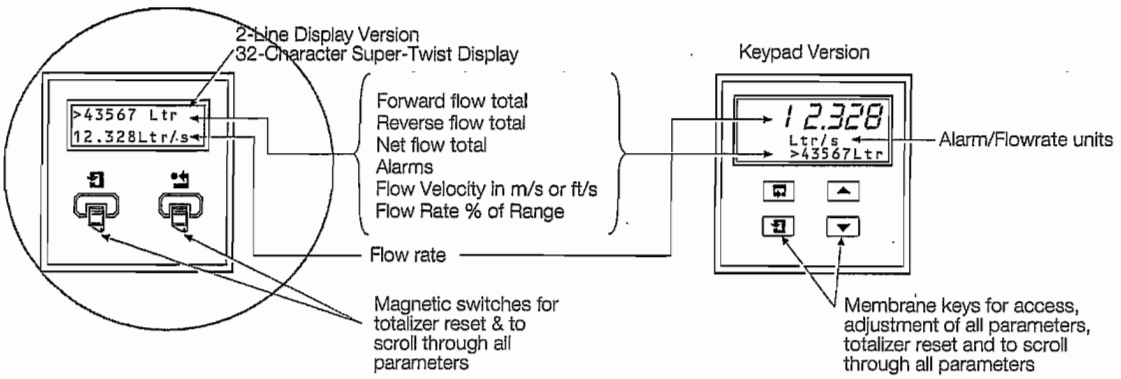

Programming Options

- Local hand-held configurator (for example PSION Workabout)
- Integral keypad
- HART
- Personal computer

Easy, Low-cost Installation

MagMaster sensors rugged and robust construction ensure a long, maintenance-free life under the arduous conditions experienced in the water and waste water industry. The sensors are fully submersible, meeting the requirements of IP68 (NEMA6P) enabling installation in flooded chambers or metering pits.

MagMaster sensors in all sizes are buriable. Installation merely involves excavating to the underground pipe, fitting the sensor, cabling back to the transmitter and then backfilling the hole. No metering chambers or pits are required to the installation is simple, fast and low cost.

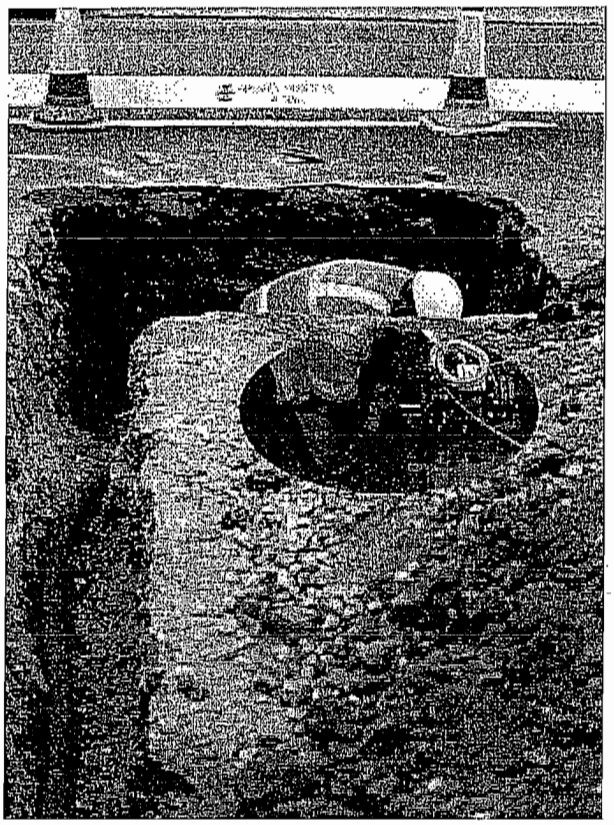

Underground Installation of MagMaster

International Approvals

Alternative versions of MagMaster are available for general locations with FM Approval/CSA Certification and for Hazardous Area locations to ATEX, FM and CSA Standards. A brief summary of these Hazardous Area versions is given below, covering the safety designation inside the pipe. No external safety barriers are required.

SENSOR	INSIDE PIPE	TRANSMITTER LOCATION
FM & CSA HAZARDOUS AREA APPROVAL – CLASS 1, DIV. 2, GROUPS A B C D		
FM APPROVED	INTRINSICALLY SAFE ELECTRODES	REMOTE ONLY IN HAZARDOUS AREA
CSA CERTIFIED		REMOTE ONLY IN HAZARDOUS AREA
CSA CERTIFIED	NON INCENDIVE	INTEGRAL AND REMOTE IN HAZARDOUS AREA
ATEX — II 2 (i) G EEx e m ia IIC T4		
ZONE 1	ZONE 0	REMOTE TRANSMITTER IN SAFE AREA

Specification – Sensor

Sizes

Sizes mm (in.)	Flow Range	
	Minimum	Maximum*
	m ³/h (US g/min)	m ³/h (US g/min)
15 (0.6)	0.005 (0.021)	6 (28)
20 (0.8)	0.009 (0.038)	11 (50)
25 (1)	0.014 (0.059)	17 (77)
40 (1.6)	0.035 (0.15)	45 (197)
50 (2)	0.053 (0.23)	71 (311)
65 (2.5)	0.089 (0.40)	119 (525)
80 (3)	0.136 (0.59)	181 (796)
100 (4)	0.21 (0.94)	283 (1243)
150 (6)	0.47 (2.10)	640 (2797)
200 (8)	0.84 (3.73)	1130 (4974)
250 (10)	1.32 (5.83)	1770 (7771)
300 (12)	1.91 (8.4)	2540 (11190)
350 (14)	2.60 (11)	3460 (15230)
400 (16)	3.39 (15)	4520 (19890)
450 (18)	4.29 (19)	5730 (25180)
500 (20)	5.3 (23)	7070 (31090
600 (24)	7.6 (33)	10180 (44760)
700 (28)	14 (46)	13850 (60920)
760 (30)	16 (52)	15900 (69930)
800 (31)	18 (60)	18100 (79560
900 (35)	23 (75)	22900 (100700)
1000 (39)	28 (93)	28300 (124300)
1050 (41)	31 (112)	34200 (150400)
1200 (47)	41 (134)	40700 (179000)
1400 (55)	55 (182)	55400 (243700)
1500 (59)	64 (208)	63600 (279700)
1600 (63)	72 (238)	72400 (318300)
1800 (71)	92 (302)	91600 (402800)
2000 (79)	113 (372)	113100 (497400)
2200 (87)	136 (451)	137000 (602000)

* Based on $10ms^{-1}$ ($33fts^{-1}$), but instrument capability in excess of $15ms^{-1}$ ($50fts^{-1}$)

Accuracy (under forward flow reference conditions)

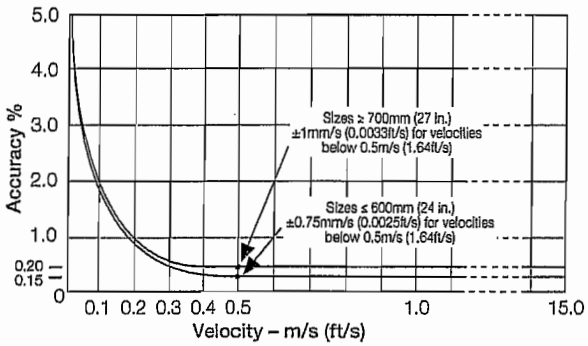

Analog output	Additional < ±0.008mA
Temperature effect	
Transmitter	<±0.08% of reading/10°C
	Analog output – Additional
	<±0.08% of reading/10°C
Power supply variation	Negligible
Pressure effect	<0.15% over the operating range of the equipment

...Specification – Sensor

Wetted Material

Lining

Suitable for potable water and waste water
(all materials UKWFBS listed)
Contact factory for non-standard materials

Electrodes

Stainless steel 316
Contact factory for non-standard materials

Flanges

Carbon steel

Pressure limitations

≤600mm as flange rating

≥700mm 6, 10 or 16 bar

Environmental protection

IP68 (NEMA6P)

Buriable to 5m (16 ft) depth

Pressure equipment directive 97/23/EC

This product is applicable in networks for the supply, distribution and discharge of water and associated equipment and is therefore exempt.

Conductivity

≥5µS/cm

End connections

PN6	ANSI B16-5 Class 150
PN10	ANSI/AWWA C207 Class B & D
PN16	AS2129 Table 'C'
	or BS10/AS2129 Table 'D' & 'E'

Electronic Display Unit

Mounting

Integral with sensor

~~OR~~

~~Remote up to 100m (325 ft)~~
~~Longer lengths available on request~~

Housing

IP65 (NEMA4)

Glass-loaded polypropylene, polycarbonate window ULVO rated

Electrical connections

20mm glands, or accepts
½ in. NPT connections

~~**Sensor cable**~~

~~ABB cable supplied as standard~~

~~Armored version available on request~~

Power supply*

Voltage Type	Voltage Range (V) Absolute rating	Frequency (Hz)	VA
AC	85 to 265	47 to 440	<20
~~DC~~	~~11 to 40~~	~~–~~	~~<20~~

*Power supply fully isolated

Liquid Sensing

Drives output to zero with an empty pipe

Languages

Operation in English, French, German, Spanish, Italian, Dutch plus others on application

Temperature Ranges

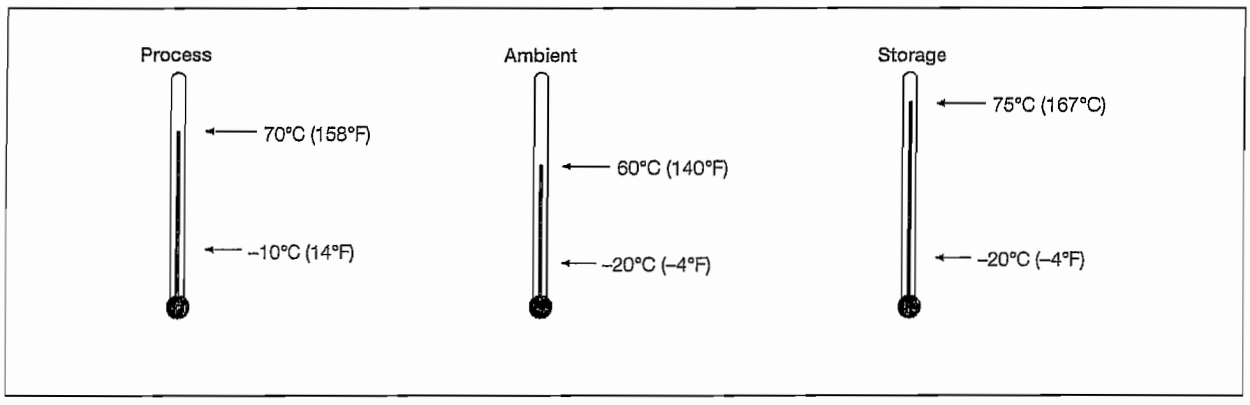

Output/Inputs

Common

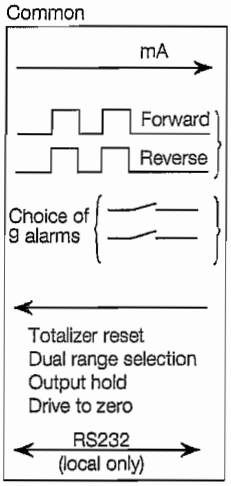

<21mA, 16V

<800Hz, <35V open collector square wave, or fixed pulse width <2.5s, 250mA

<35V, >250mA open collector

Contact closure or logic input

9-pin D-connector (PC compatible)

Optional (For blind & 2-line display units)

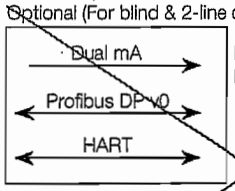

Dual analog (optional)
Non-active output is 4mA or 0mA

Optional (For keypad units)

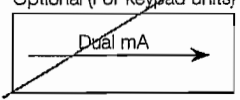

Dual analog
Non-active output is 4mA or 0mA

Galvanic isolation to 50V DC between analog pulse/alarm and earth/ground

Mounting

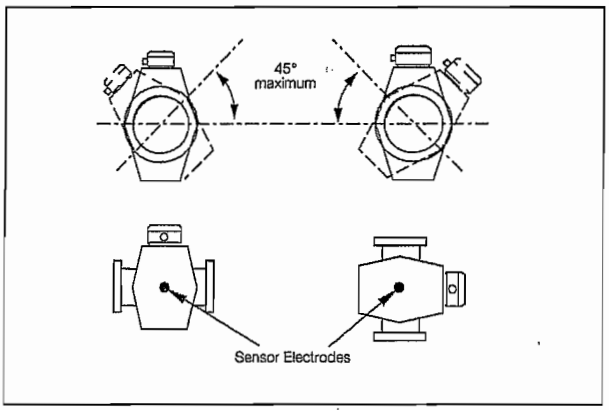

Pipe Connections

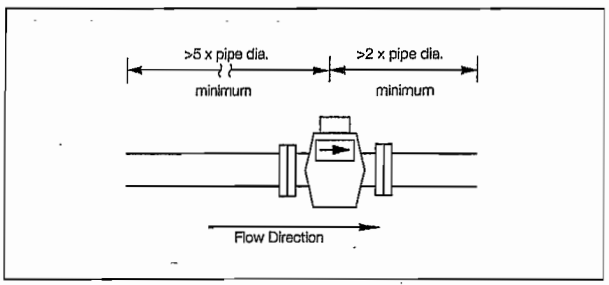

Sensor Specification (nominal dimensions)

15 to 2200mm (0.5 to 84 in.)

Meter Size mm	Flange Size			Length A mm (in.)	Approximate Weight kg (lb)
	Metric Flanges (DN)	BS10 Flanges (in.)	AWWA C207 Flanges (NPS)		
15	15	1/2	1/2		
20	20	3/4	3/4		7 (15)
25	25	1	1		
40	40	1 1/2	1 1/2	200 (7.9)*	9 (20)
50	50	2	2		10 (23)
65	65	2 1/2	2 1/2		18 (40)
80	80	3	3		18 (40)
100	100	4	4	250 (9.8)*	24 (54)
150	150	6	6	300 (11.8)*	38 (84)
200	200	8	8	350 (13.8)**	55 (121)
250	250	10	10	450 (17.7)**	88 (194)
300	300	12	12	500 (19.7)**	128 (282)
350	350	14	14	550 (21.7)**	100 (220)
400	400	16	16	600 (23.6)**	115 (253)
450	450	18	18	698 (27.5)**	160 (352)
500	500	20	20	768 (30.2)**	217 (455)
600	600	24	24	918 (36.1)**	315 (693)
700	700	27	28	700 (27.6)***	
760	760	30	30	762 (30)***	430 (945)
800	800	–	–	800 (31.5)***	
900	900	36	36	900 (35.4)***	540 (1190)
1000	1000	39	39	1000 (39.4)***	720 (1585)
1050	1050	42	42	1067 (42)***	880 (1930)
1200	1200	48	48	1200 (47.2)***	1000 (2160)
1400	1400	54	54	1400 (55.1)***	1450 (3190)
1500	1500	60	60	1524 (59)***	1370 (3000)
1600	1600	66	66	1600 (63)***	2000 (4400)
1800	1800	72	72	2250 (88.6)***	2400 (5280)
2000	2000	78	78	2500 (98.4)***	3200 (7040)
2200	2200	84	84	2750 (110)***	4200 (9300)

*Typical tolerance +0/–3mm
**Typical tolerance +0/–5mm
***Typical tolerance +0/–10mm

Dimensions in mm (in.)

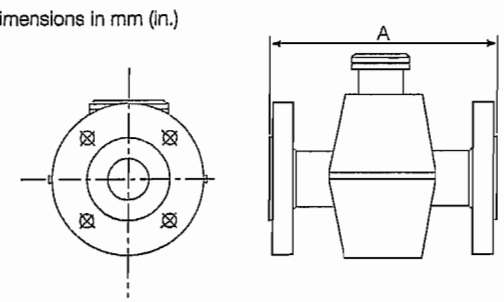

Overall Dimensions

Terminal Box – Sensor Mounted

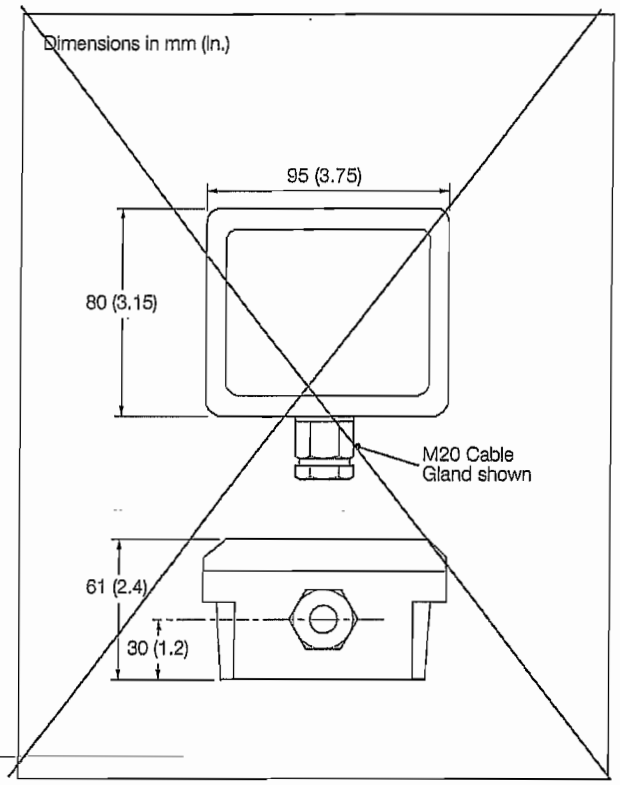

IP65/NEMA4 Remote Electronic Display Unit

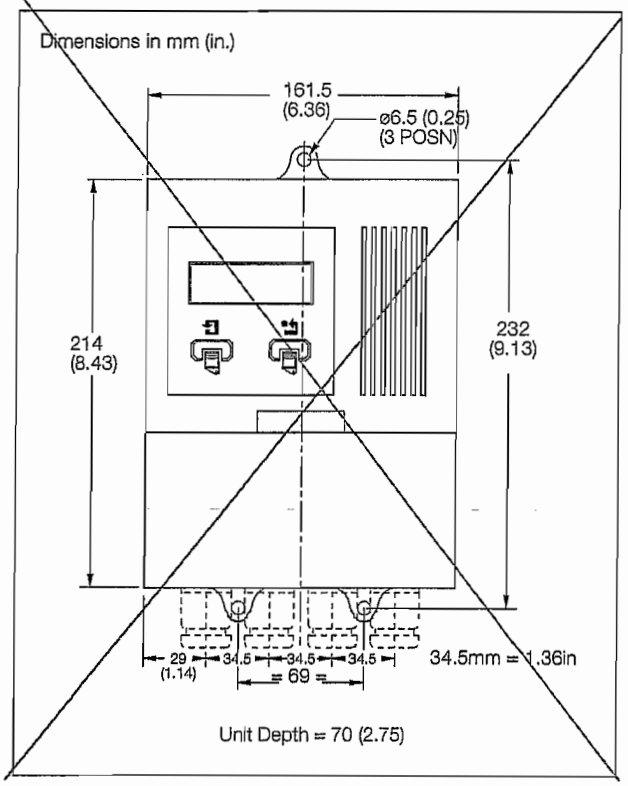

Integral Electronic Display Unit (mounted on Sensor)

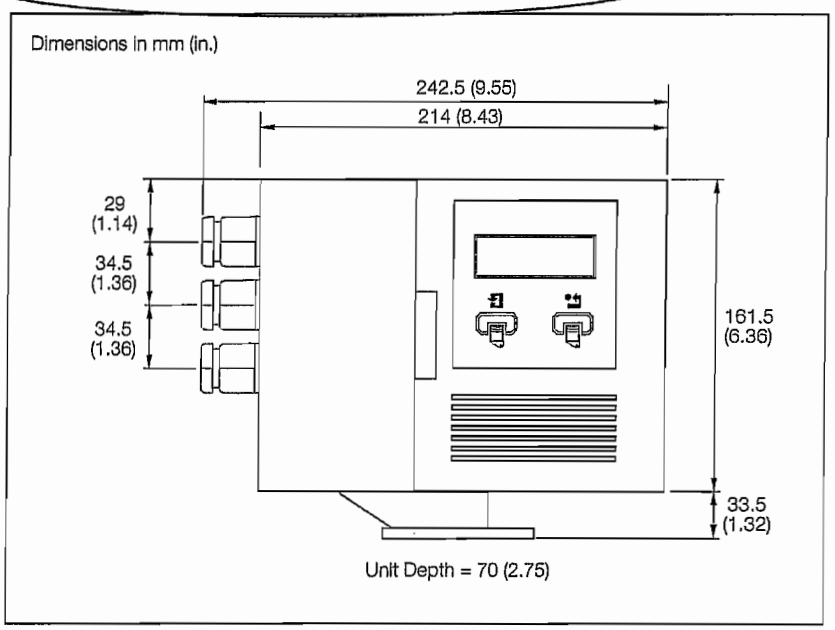

Electrical Connections

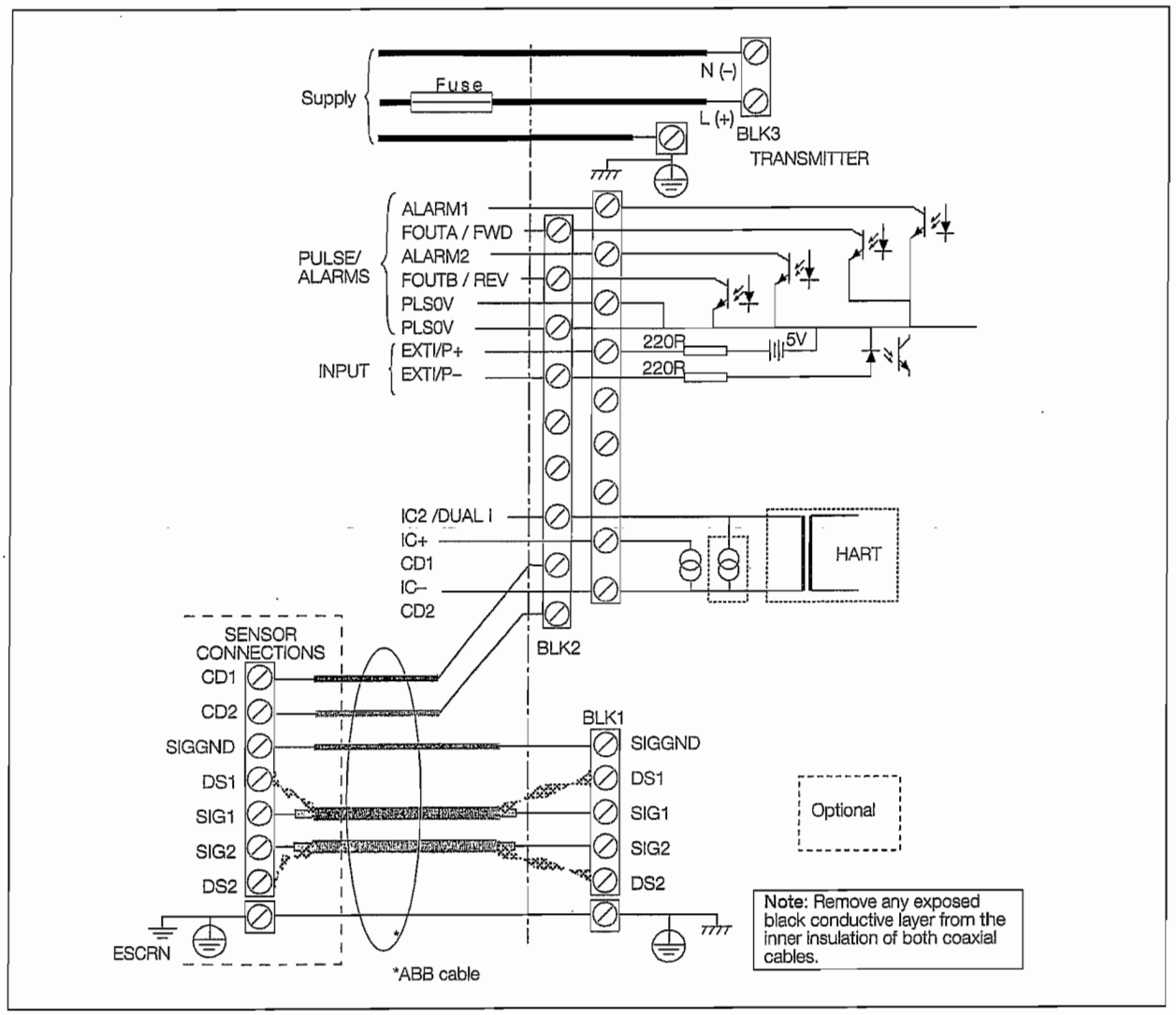

Ordering Information

Sensor Ordering Code	MF XXXX	X	X	X	X	0	X	XX	X	XX
Calibrated Bore										
No sensor (Transmitter only)	E000									
15mm (1/2 in.)	E150									
20mm (3/4 in.)	E200									
25mm (1 in.)	E250									
40mm (1 1/2 in.)	E400									
50mm (2 in.)	E500									
65mm (2 1/2 in.)	E650									
80mm (3 in.)	F800									
100mm (4 in.)	F101									
150mm (6 in.)	F151									
200mm (8 in.)	F201									
250mm (10 in.)	F251									
300mm (12 in.)	F301									
350mm (14 in.)	F351									
400mm (16 in.)	F401									
450mm (18 in.)	F451									
500mm (20 in.)	F501									
600mm (24 in.)	F601									
700mm (28 in.)	F701									
760mm (30 in.)	F761									
800mm (31 in.)	F801									
900mm (35 in.)	F901									
1000mm (39 in.)	F102									
1050mm (41 in.)	F112									
1200mm (47 in.)	F122									
1400mm (55 in.)	F142									
1500mm (59 in.)	F152									
1600mm (63 in.)	F162									
1800mm (71 in.)	E182									
2000mm (79 in.)	E202									
2200mm (87 in.)	E222									
≥2400mm (94 in.) – apply to Sales Office										
End Connections – Flanged		0								
None (Transmitter only)		1								
PN16, fully rated		C								
PN16, 10 bar rated 700mm to 2200mm		B								
PN16, 6 bar rated 700mm to 2200mm		5								
PN10, fully rated		8								
PN6, fully rated 700mm to 2200mm		3								
ANSI B 16.5 class 150, fully rated ≤24 in.		U								
ANSI/AWWA C207 class B fully rated 27 in. to 66 in.		V								
ANSI/AWWA C207 class D fully rated 27 in. to 66 in.		F								
AS2129 Table C fully rated ≤24 in.		L								
AS2129 Table D fully rated ≤66 in.		7								
BS10/AS2129 Table E, fully rated ≤48 in.		K								
BS10 Table D fully rated ≤66 in.		Z								
AS4087 Class 16										
Lining Material			0							
None (Transmitter only)			4							
Elastomer suitable for potable water and waste water – WRAS (UK) Listed			F							
Elastomer suitable for potable water and waste water – ACS (France) Approved										
Others on application										
Electrodes				0						
None (Transmitter only)				1						
316 Stainless Steel (suitable for water and waste water)										
Others on application										
Sensor Build Standard					0					
Transmitter only					1					
General					8					
FM/CSA – GENERAL										
Calibration							0			
Transmitter only							1			
Standard 3-point, with pressure test							2			
8-point, with pressure test							5			
UKAS, with pressure test							A			
Standard 3-point, no pressure test							B			
8-point, no pressure test							D			
UKAS, no pressure test							I			
Standard 3-point; CalMaster Fingerprint & disk; No pressure test							J			
Standard 3-point; CalMaster Fingerprint & disk; With pressure test										
Cable Length – User-specified length in 10m increments (90m max.) (Must be '00' for glanding digit 4)								XX		
Glanding									0	
None (Transmitter only)									1	
20mm plastic gland (sensor cable fitted and potted)									4	
Conduit entry: 1/2 in. NPT (Blanked) – all North American versions (cable length to be '00')									5	
20mm plastic. Cable not fitted.									7	
20mm armor. Cable not fitted.										
Transmitter										EH
Sensor-mounted MagMaster Transmitter, ≤400mm (16 in.) only										ER
Remote MagMaster Transmitter										

Ordering Information

Transmitter Ordering Code	X	X	X	X	X	X	X
Power Supply							
None - Sensor only	0						
95V to 240V AC nominal, 47 to 440Hz	1						
11V to 40V DC (Max)	3						
Display							
None (or sensor only)		0					
2-Line Display		3					
3-Line Display with keypad (no HART)		4					
Output Options							
Standard outputs (or sensor only)			0				
Dual current output			1				
HART communications			2				
Profibus DP v0			8				
Transmitter Build Standard							
None (or sensor only)				0			
GENERAL				1			
FM/CSA–GENERAL				3			
Display Orientation							
None (or sensor only)					0		
Standard					1		
Other please enquire							
Language							
None (or sensor only)						0	
English						1	
French						2	
German						3	
Spanish						4	
Italian						5	
Dutch						6	
Labelling							
Factory allocated (internal only)							X

ABB has Sales & Customer Support expertise in over 100 countries worldwide

www.abb.com

The Company's policy is one of continuous product improvement and the right is reserved to modify the information contained herein without notice.

Printed in UK (05.06)

© ABB 2006

SS/MAG/WW issue 14

ABB Limited
Oldends Lane, Stonehouse
Gloucestershire
GL10 3TA
UK
Tel: +44 (0)1453 826661
Fax: +44 (0)1453 829671

ABB Inc.
125 E. County Line Road
Warminster
PA 18974
USA
Tel: +1 215 674 6000
Fax: +1 215 674 7183

Earth Tech (Canada) Inc.

Reviewed for general conformance with design intent. Responsibility for detailed design in the shop drawings rests with the Contractor.

Responsibility for verification and correlation of field dimensions, fabrication process, techniques of construction, installation and coordination of all parts of the work rests with the Contractor.

REVIEWED ✓

REVIEWED AS MODIFIED

REVISE AND RE-SUBMIT

NOT REVIEWED

Project No. C28/16/79538

Date: 11/9/06 By: M. Yank

HACH HARDNESS MONITOR

APA 6000™ Low-Range Hardness Analyzer

The Hach APA 6000 Low-Range Hardness Analyzer uses USEPA-approved calmagite chemistry to accurately and continuously measures up to two sample streams. It can operate unattended for one month and requires little maintenance. Use it to makes water-softening systems more efficient and less costly.

Features and Benefits

Accurate and Continuous Monitoring of Soluble Hardness

Hach's patented* APA 6000™ Low-Range Hardness Analyzer accurately and continuously measures up to two sample streams for low levels (50 µg/L to 10 mg/L) of soluble hardness. Using a precise colorimetric method, the instrument performs an analysis every four minutes. It delivers continuous, accurate, and dependable performance with minimal cost for operation and maintenance.

** U.S. Patent 5849592*

Optimize Softener Performance

The APA 6000 Low-Range Hardness Analyzer is designed specifically for reliable and continuous analysis at low concentrations. Use it to establish an automatic system for monitoring softener performance in industrial, ultrapure, and water treatment processes.

Industrial and Ultrapure Water Applications

The APA 6000 Hardness Analyzer can be used to monitor both influent and effluent in industrial applications and water treatment processes including demineralizer effluent, boiler feed-water, boiler water, and process water. It is also appropriate for monitoring hardness in ultrapure processes used by pharmaceutical, electronic chip, and cosmetics manufacturers.

Easy to Use

The interface of the APA 6000 Hardness Analyzer is menu-driven with on-screen prompting, self-test diagnostics, security provisions, and flexible data logging options. Simple menus (available in English, French, German or Spanish) guide the user through each step of operation.

Automatic 2-Stream Analysis

Two separate sample streams can be monitored with the APA 6000 Hardness Analyzer when used with additional sample sequencing kits.

Operation

Fluid Handling

The Hach APA 6000 Low-Range Hardness Analyzer uses patented Carrierless Sequential Injection Analysis (CSIA) for fluid handling. Analysis is fast and consumption of both reagents and sample is low. By using the sample as the dispersion carrier, a separate carrier liquid is unnecessary. The required sample volume is about 1% of that required by other analyzers.

Components

The APA 6000 Hardness Analyzer is made up of six primary components: autoburette, multi-position valve, mixing chamber, colorimetric detector, AquaTrend® Interface, and the external case.

Measurement Procedure

In a typical measurement cycle, the autoburette dispenses accurate volumes of sample, standard, and reagent through the multi-position valve into the mixing chamber. From the mixing chamber, sample and reagent are dispensed to the colorimetric detector, which produces a precise reading of the sample's hardness concentration.

Maintenance

Separate, spill-containing compartments on each side of the instrument contain all chemical reagents and standards. Solutions can be changed without opening the enclosure and influencing the internal temperature of the instrument.

Specifications*

Range
50 µg/L to 10.0 mg/L soluble hardness (calcium and magnesium ions) as $CaCO_3$

Accuracy
Better than ±5% of reading or ±50 µg/L, whichever is greater

Repeatability
Better than ±3% of reading or ±30 µg/L, whichever is greater

Cycle Time
Less than 4 minutes

Calibration Cycle (typical)
Normal 35 minutes

Sample Temperature Range
5 to 50°C (41 to 122°F)

Sample Flow
100 to 1000 mL/min. maximum at basic water conditioning filter; 6 mL/min. maximum, filtered to 22 µm or less at sample inlet block

Inlet Pressure
2.5 to 100 psig at basic water conditioning filter; 0.5 to 30 psig at sample inlet block

Volume: 100 mL minimum; filtered to 22 µm or better

Sample Filter Inlet
1/4" NPT male or female

Drain Fitting
1/2" NPT barbed hose fitting

Outputs
Two 4-20 mA outputs suitable for recorders. Output span programmable over any portion of the 0 to 10 mg/L range (130 Vac isolation from earth ground).

Alarms
Two SPDT relays with contacts rated for 5A resistive load at 230 Vac. Additional relays available with optional Signal Output Modules.

Network Connectivity
AquaTrend™ network, using the Lonworks® protocol

Data Communication Distance
Maximum node-to-node distance:
400 m (1312 ft.)

Maximum total wire length:
500 m (1640 ft.)

Certification
NRTL certified to UL and CSA standards and CE approved

Power Requirements
95 to 240 Vac, 50/60 Hz

Enclosure
NEMA-4X(indoor)/IEC 529 (IP66) with provision for air purge. Reagent enclosure is drip-proof.

Dimensions
522 x 627 x 526 mm (21 x 25 x 21in.)

Weight
56 lbs (25.5 kg)

**Specifications subject to change without notice.*

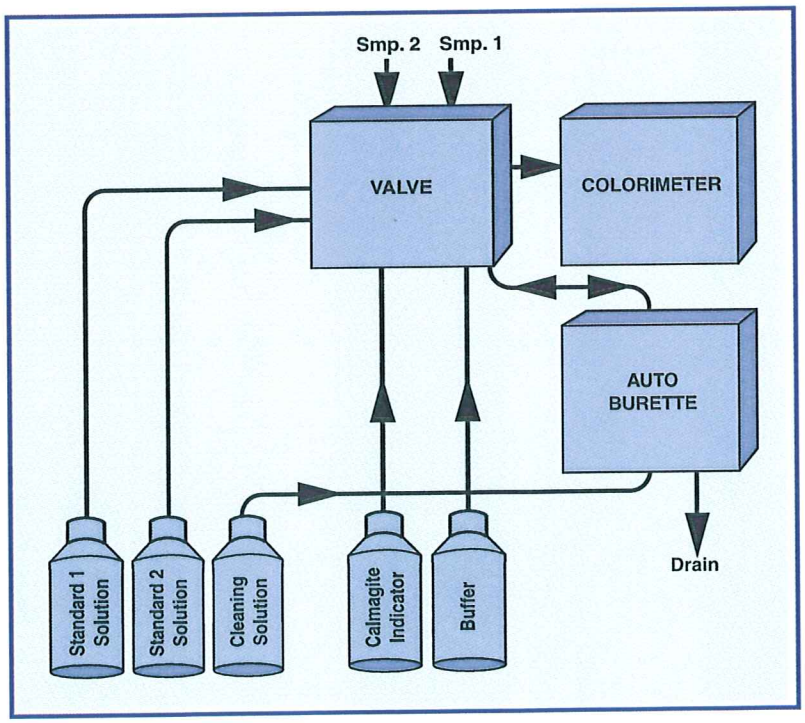

The multi-position valve directs the flow of samples, reagents, and standards through the instrument for hardness analysis every four minutes.

Engineering Specifications

1. The hardness analyzer shall be a continuous-reading analyzer that utilizes calmagite and Mg-EDTA for colorimetric measurement of hardness at a wavelength of 520 nm.
2. The measurement range shall be 50 to 10,000 µg/L (parts per billion) total soluble hardness as $CaCO_3$.
3. The analyzer accuracy shall be ±5% of reading or ±50 µg/L, whichever is greater; precision shall be ±3% of reading or ±30 µg/L, whichever is greater.
4. The analyzer shall display data in a numeric or graphical format.
5. The analyzer shall be capable of automatic calibration, cleaning and self-priming.
6. The analyzer shall provide for continuous purge for sample to drain to assure fresh sample to the analyzer and reduce analysis lag time.
7. Two user-selectable recorder/controller outputs of 4-20 mA, with expansion capability up to 14, shall be provided.
8. Recorder output span shall be user-adjustable over the entire span of the analyzer.
9. User-defined alarms may be programmed for sample concentration alarms, analyzer system warning and analyzer system shutdown. Two unpowered SPDT relays, also with expansion capability up to 14, shall be provided for internal alarms.
10. Two relay contacts shall be rated for 5A resistive load at 230 Vac.
11. The analyzer components shall be housed in a NEMA-4X (indoor)/IEC 529 (IP66) plastic enclosure designed for bench, wall or panel mounting. Standards and reagents shall be isolated from analyzer electronics in separate plastic containers.
12. Power requirement shall be 95 to 240 Vac, 50/60 Hz. The analyzer shall be warranted for one full year against defects in materials and workmanship and shall include a 30-day supply of standards and reagents.
13. The analyzer shall be designed to meet UL 3101-1, CSA C22.2 No. 1010.1 and EN61010-1 (IEC 1010-1) safety standards. The analyzer shall also comply with Class A limits for radio and noise emission as specified by the FCC and EN55011 (CISPR11).
14. The analyzer shall be Hach model APA 6000 Low-Range Hardness Analyzer.

Dimensions

The APA 6000 Low-Range Hardness Analyzer should be installed as close as possible to the sampling point. The instrument will respond faster to changes in sample concentration.

FRONT VIEW

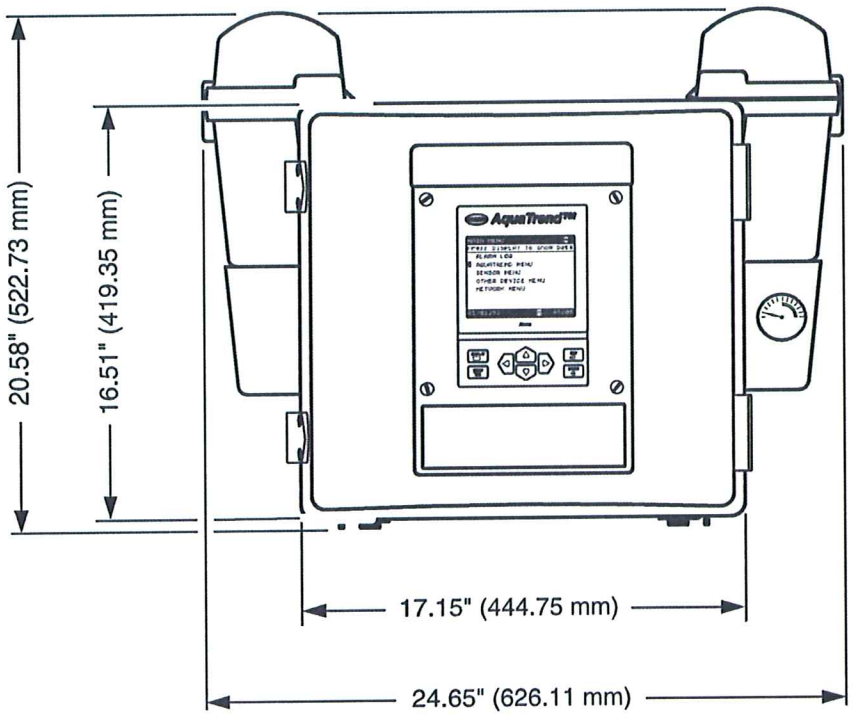

SIDE VIEW

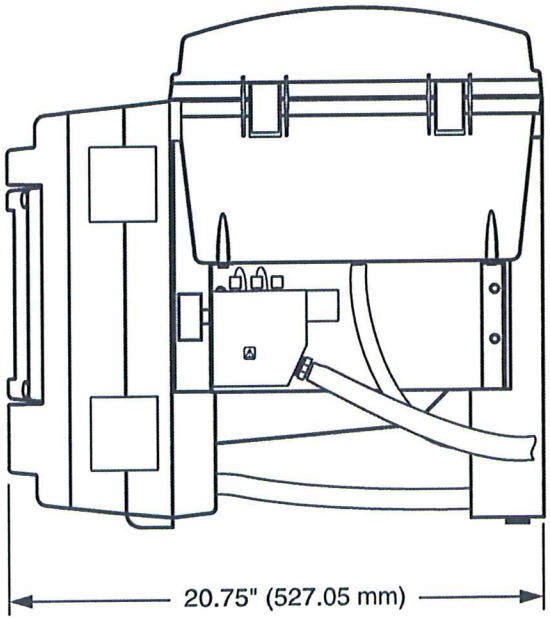

Ordering Information

The APA 6000 Low-Range Hardness Analyzer is supplied with an Installation Kit, Maintenance Kit, Basic Sample Conditioning Kit, Manual, Quick Reference Card, and a 1-month supply of reagents.

51002-10 APA 6000 Low Range Hardness Analyzer with integral AquaTrend® Interface and Reagents, 50 to 10,000 µg/L

Reagents

26958-53 Reagent 1, Hardness Indicator Solution, 1 L

26957-53 Reagent 2, Hardness Buffer Solution, 1 L

26962-53 Standard 1, Hardness Standard Solution, 0 mg/L, 1 L

26963-53 Standard 2, Hardness Standard Solution, 5 mg/L, 1 L

28764-53 Cleaning Solution, APA 6000, 1 L

60019-00 Reagent set, Low Range Hardness

60020-00 Standards set, Low Range Hardness

Optional Accessories

46306-00 Power Cord, 120 Vac

46308-00 Power Cord, 240 Vac

51068-00 Automatic Air Backflush Kit (120 Vac)

51068-01 Automatic Air Backflush Kit (230 Vac)

52074-00 Serial I/O Module

51250-00 Signal Output Module

52400-00 Digital Display Module

51200-00 Remote AquaTrend

52010-00 PS1201 Power Supply

51339-00 APA 6000 Micor Filter System, 115 V

51339-02 APA 6000 Micro Filter System, 230 V

Cables

52157-XX 22-gauge, 2-conductor cable, communication only, available in 50, 100, 250, 500, and 1000 foot increments only.

52158-XX 20-gauge, 4-conductor cable, available in 50, 100, 250, 500, and 1000 foot increments only.

At Hach, it's about learning from our customers and providing the right answers. It's more than ensuring the quality of water—it's about ensuring the quality of life. When it comes to the things that touch our lives... Keep it pure. Make it simple. Be right.

For current price information, technical support, and ordering assistance, contact the Hach office or distributor serving your area.

In the United States, contact:

HACH COMPANY World Headquarters
P.O. Box 389
Loveland, Colorado 80539-0389
U.S.A.
Telephone: 800-227-4224
Fax: 970-669-2932
E-mail: orders@hach.com
www.hach.com

U.S. exporters and customers in Canada, Latin America, sub-Saharan Africa, Asia, and Australia/New Zealand, contact:

HACH COMPANY World Headquarters
P.O. Box 389
Loveland, Colorado 80539-0389
U.S.A.
Telephone: 970-669-3050
Fax: 970-461-3939
E-mail: intl@hach.com
www.hach.com

In Europe, the Middle East, and Mediterranean Africa, contact:

HACH LANGE GmbH
Willstätterstraße 11
D-40549 Düsseldorf
GERMANY
Tel: +49 (0) 211 5288-0
Fax: +49 (0) 211 5288-143
E-mail: info@hach-lange.de
www.hach-lange.com

Lit. No. 1584
XXXX Printed in U.S.A.
©Hach Company, 2005. All rights reserved.
In the interest of improving and updating its equipment, Hach Company reserves the right to alter specifications to equipment at any time.

HACH®

Be Right™

ASCO SOLENOID VALVES

ASCO® Red-Hat®

Pilot Operated

General Service Solenoid Valves

Brass or Stainless Steel Bodies

3/8" to 2 1/2" NPT

NC

NO

2/2 SERIES 8210

Features

- Wide range of pressure ratings, sizes, and resilient materials provide long service life and low internal leakage.
- High Flow Valves for liquid, corrosive, and air/inert gas service.
- Industrial applications include:
  - Car wash
  - Laundry equipment
  - Air compressors
  - Industrial water control
  - Pumps

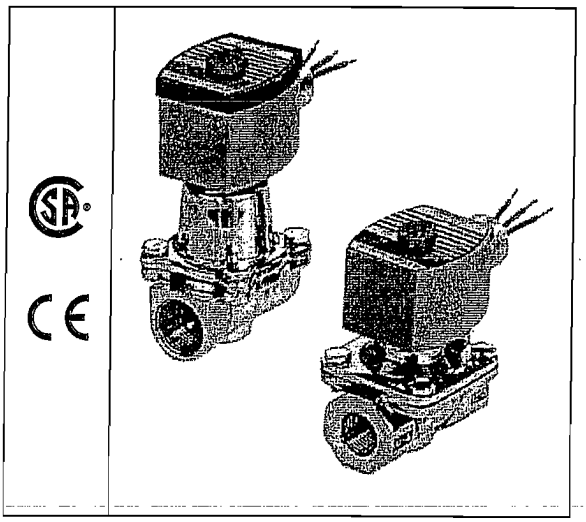

Construction

Valve Parts in Contact with Fluids		
Body	Brass	304 Stainless Steel
Seals and Discs	NBR or PTFE	
Disc-Holder	PA	
Core Tube	305 Stainless Steel	
Core and Plugnut	430F Stainless Steel	
Springs	302 Stainless Steel	
Shading Coil	Copper	Silver

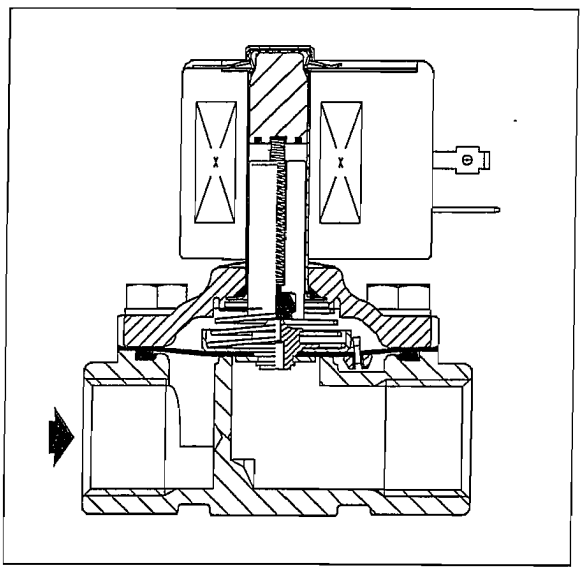

Electrical

Standard Coil and Class of Insulation	Watt Rating and Power Consumption				Spare Coil Part Number			
	DC	AC			General Purpose		Explosionproof	
	Watts	Watts	VA Holding	VA Inrush	AC	DC	AC	DC
F	-	6.1	16	40	238210	-	238214	-
F	11.6	10.1	25	70	238610	238710	238614	238714
F	16.8	16.1	35	180	272610	97617	272614	97617
F	-	17.1	40	93	238610	-	238614	-
F	-	20	43	240	99257	-	99257	-
F	-	20.1	48	240	272610	-	272614	-
H	30.6	-	-	-	-	74073	-	74073
H	40.6	-	-	-	-	238910		238914

Standard Voltages: 24, 120, 240, 480 volts AC, 60 Hz (or 110, 220 volts AC, 50 Hz). 6, 12, 24, 120, 240 volts DC. Must be specified when ordering. Other voltages available when required.

Solenoid Enclosures

Standard: Red-Hat II - Watertight, Types 1, 2, 3, 3S, 4, and 4X; Red-Hat - Type I.
Optional: Red-Hat II - Explosionproof and Watertight, Types 3, 3S, 4, 4X, 6, 6P, 7, and 9; Red-Hat - Explosionproof and Watertight, Types 3, 4, 4X, 7, and 9.
(To order, add prefix "EF" to catalog number, except Catalog Numbers 8210B57, 8210B58, and 8210B59. Valves not available with Explosionproof enclosures.)
See Optional Features Section for other available options.

Nominal Ambient Temperature Ranges:

~~Red-Hat II/~~
Red-Hat AC: 32°F to 125°F (0°C to 52°C)
~~Red-Hat II DC: 32°F to 104°F (0°C to 40°C)~~
Red-Hat DC: 32°F to 77°F (0°C to 25°C)
(104°F/40°C occasionally)
Refer to Engineering Section for details.

Approvals:

CSA certified Red-Hat II meets applicable CE directives.
Refer to Engineering Section for details.

ASCO®

Specifications (Metric units)

Pipe Size (ins.)	Orifice Size (mm)	Kv Flow Factor (m3/h)	Operating Pressure Differential (bar) Min.	Max. AC Air-Inert Gas	Max. AC Water	Max. AC Light Oil @ 300 SSU	Max. DC Air-Inert Gas	Max. DC Water	Max. DC Light Oil @ 300 SSU	Max.Fluid Temp. °C AC	Max.Fluid Temp. °C DC	Brass Body Catalog Number	Brass Body Constr. Ref. No. ④	Brass Body UL ⑤ Listing	Stainless Steel Body Catalog Number	Stainless Steel Body Constr. Ref. No. ④	Stainless Steel Body UL ⑤ Listing	Watt Rating/ Class of Coil Insulation ⑦ AC	Watt Rating/ Class of Coil Insulation ⑦ DC
NORMALLY CLOSED (Closed when de-energized), NBR or PTFE ② Seating																			
3/8	10	1.29	①	10	9	-	3	3	-	81	65	8210G73 ③	1P	●	8210G36 ③	1P	●	6.1/F	11.6/F
3/8	16	2.57	0	10	10	-	3	3	-	81	65	8210G93	5D	○	-	-	-	10.1/F	11.6/F
3/8	16	2.57	0.3	14	10	9	9	7	7	81	65	8210G1	6D	○	-	-	-	6.1/F	11.6/F
3/8	16	2.57	0.3	21	21	21	-	-	-	79	-	8210G6	5D	○	-	-	-	17.1/F	-
1/2	11	1.89	①	10	9	-	3	3	-	81	65	8210G15 ③	2P	●	8210G37 ③	2P	●	6.1/F	11.6/F
1/2	16	3.43	0	10	10	-	3	3	-	81	65	8210G94	5D	○	-	-	-	10.1/F	11.6/F
1/2	16	3.43	0	10	10	9	3	3	-	79	65	-	-	-	8210G87	7D	●	17.1/F	11.6/F
1/2	16	3.43	0.3	14	10	9	9	7	7	81	65	8210G2	6D	○	-	-	-	6.1/F	11.6/F
1/2	16	3.43	0.3	21	21	21	-	-	-	79	-	8210G7	5D	○	-	-	-	17.1/F	-
1/2	19	3.43	0.3	-	21	-	-	21	-	81	52	8210G227	5D	○	-	-	-	17.1/F	40.6F
3/4	16	3.86	0	10	10	9	3	3	-	79	65	-	-	-	8210G88	7D	●	17.1/F	11.6/F
3/4	19	4.29	0.3	9	9	9	7	6	5	81	65	8210G9	9D	○	-	-	-	6.1/F	11.6/F
3/4	19	4.29	0	10	10	-	3	3	-	81	65	8210G95	8D	○	-	-	-	10.1/F	11.6/F
3/4	19	5.57	0.3	17	10	7	9	9	9	81	65	8210G3	11D	○	-	-	-	6.1/F	11.6/F
3/4	19	5.14	0	-	-	-	14	12	12	-	25	8210B26 ② ‡	10P	-	-	-	-	-	30.6/H
3/4	19	5.14	0	24	21	14	-	-	-	92	-	8210G26 ② ‡	40P	●	-	-	-	16.1F	-
1	25	11.14	0	-	-	-	7	7	6	-	25	8210B54 ‡	31D	-	8210D89	15D	-	-	30.6/H
1	25	11.14	0	10	9	9	-	-	-	81	-	8210G54	41D	●	8210G89	45D	●	16.1/F	-
1	25	11.14	0.3	10	10	7	9	9	9	81	65	8210G4	12D	○	-	-	-	6.1/F	11.6/F
1	25	11.57	0	21	16	8	-	-	-	92	-	8210G27 ‡	42P	●	-	-	-	20.1/F	-
1	25	11.57	0.7	21	21	21	-	-	-	79	-	8210G78 ②	13P	-	-	-	-	17.1/F	-
1 1/4	29	12.86	0	-	-	-	7	7	6	-	25	8210B55 ‡	32D	-	-	-	-	-	30.6/H
1 1/4	29	12.86	0	10	9	9	-	-	-	81	-	8210G55	43D	●	-	-	-	16.1/F	-
1 1/4	29	12.86	0.3	10	10	7	9	9	9	81	65	8210G8	16D	○	-	-	-	6.1/F	11.6/F
1 1/2	32	19.29	0	-	-	-	7	7	6	-	25	8210B56 ‡	33D	-	-	-	-	-	30.6/H
1 1/2	32	19.29	0	10	9	9	-	-	-	81	-	8210G56 ‡	44D	●	-	-	-	16.1/F	-
1 1/2	32	19.29	0.3	10	10	7	9	9	9	81	65	8210G22	18D	●				6.1/F	11.6/F
2	44	36.86	0.3	10	9	6	3	3	3	81	65	8210G100	20P	●	-	-	-	6.1/F	11.6/F
2 1/2	44	38.57	0.3	10	9	6	3	3	3	81	65	8210G101	21P	●				6.1/F	11.6/F
NORMALLY OPEN (Open when de-energized), NBR Seating (PA Disc-Holder, except as noted)																			
3/8	16	2.57	0.0	10	10	9	9	9	6	81	65	8210G33	23D	●	-	-	-	10.1/F	11.6/F
3/8	16	2.57	0.3	17	14	14	17	14	14	81	81	8210G11 ⑧ ⑨	39D	●	-	-	-	10.1/F	11.6/F
1/2	16	3.43	0	10	10	9	9	9	6	81	65	8210G34	23D	●	-	-		10.1/F	11.6/F
1/2	16	2.57	0	10	10	7	9	9	6	81	65	-	-	-	8210G30	37D	●	10.1/F	11.6/F
1/2	16	3.43	0.3	17	14	14	17	14	14	81	81	8210G12 ⑧ ⑨	39D	●	-	-	-	10.1/F	11.6/F
3/4	19	4.71	0	10	10	9	9	9	6	81	65	8210G35	25D	●	-	-	-	10.1/F	11.6/F
3/4	16	2.57	0	10	10	7	9	9	6	81	65	-	-	-	8210G38	38D	●	10.1/F	11.6/F
3/4	19	5.57	0.3	-	-	-	17	14	14	-	81	8210C13	24D	●	-	-	-	-	16.8/F
3/4	19	5.57	0.3	17	14	14	-	-	-	81	-	8210G13	46D	●	-	-	-	16.1/F	-
1	25	11.14	0	9	9	9	-	-	-	81	-	8210B57 ⑥ ⑩	34D	●	-	-	-	20/F	-
1	25	11.14	0.3	-	-	-	9	9	9	-	81	8210D14	26D	●	-	-	-	-	16.8/F
1	25	11.14	0.3	10	10	9	-	-	-	81	-	8210G14	47D	●	-	-	-	16.1/F	-
1 1/4	29	12.86	0	9	9	9	-	-	-	81	-	8210B58 ⑥ ⑩	35D	●	-	-	-	20/F	-
1 1/4	29	12.86	0.3	-	-	-	9	9	9	-	81	8210D18	28D	●	-	-	-	-	16.8/F
1 1/4	29	12.86	0.3	10	10	9		-	-	81	-	8210G18	48D	●	-	-	-	16.1/F	-
1 1/2	32	19.29	0	9	9	9	-	-	-	81	-	8210B59 ⑥ ⑩	36D	●	-	-	-	20/F	-
1 1/2	32	19.29	0.3	-	-	-	9	9	9	-	81	8210D32	29D	●	-	-	-	-	16.8/F
1 1/2	32	19.29	0.3	10	10	9	-	-	-	81	-	8210G32	49D	●	-	-	-	16.1/F	-
2	44	36.86	0.3	-	-	-	9	9	9	-	65	8210103	30P	●	-	-	-	-	16.8/F
2	44	36.86	0.3	9	9	9	-	-	-	81	-	8210G103	50P	●	-	-	-	16.1/F	-
2 1/2	44	38.57	0.3	-	-	-	9	9	9	-	65	8210104	27P	●	-	-	-	-	16.8/F
2 1/2	44	38.57	0.3	9	9	9	-	-	-	81	-	8210G104	51P	●	-	-	-	16.1/F	-

Notes:
① 0.3 bar on Air; 0.0 bar on Water.
② Valve provided with PTFE main disc.
③ Valve includes Ultem (G.E. trademark) piston.
④ Letter "D" denotes diaphragm construction; "P" denotes piston construction.
⑤ ○ Safety Shutoff Valve; ● General Purpose Valve.
Refer to Engineering Section (Approvals) for details.
⑥ Valves not available with Explosionproof enclosures.
⑦ On 50 hertz service, the watt rating for the 6.1/F solenoid is 8.1 watts.
⑧ AC construction also has PA seating.
⑨ No disc-holder.
⑩ Stainless Steel disc-holder.
‡ Must have solenoid mounted vertical and upright.

ASCO®

Dimensions: inches (mm)

Constr. Ref. No.		H	K	L	P	W
1*	ins.	3.85	3.00	1.91	3.41	1.69
	mm	98	76	49	87	43
2*	ins.	4.17	3.25	2.28	3.63	1.69
	mm	106	83	58	92	43
13	ins.	4.44	3.22	3.75	4.18	5.81
	mm	113	82	95	106	147
5	ins.	3.84	2.31	2.75	3.28	2.28
	mm	98	59	70	83	58
6*	ins.	3.38	1.94	2.75	2.80	2.28
	mm	86	49	70	71	58
7	ins.	4.19	2.50	2.81	3.47	2.39
	mm	106	64	71	88	61
8	ins.	4.13	2.47	2.81	3.44	2.29
	mm	105	63	71	87	58
9*	ins.	3.66	2.10	2.81	2.96	2.28
	mm	93	53	71	75	58
10*①	ins.	5.25	X	2.81	4.59	2.31
	mm	133	X	71	117	59
11*	ins.	4.16	2.66	3.84	3.52	2.75
	mm	106	68	98	89	70
12	ins.	5.64	3.15	3.75	4.01	3.36
	mm	143	80	95	102	85
15*	ins.	5.34	X	3.75	4.47	3.84
	mm	136	X	95	114	98
16	ins.	5.64	3.15	3.66	4.01	3.56
	mm	143	80	93	102	90
18	ins.	6.11	3.30	4.38	4.16	3.92
	mm	155	84	111	106	100
20*	ins.	7.33	3.71	5.06	4.57	4.87
	mm	186	94	129	116	124
21*	ins.	7.33	3.71	5.50	4.57	4.87
	mm	186	94	140	116	124
23	ins.	4.35	2.65	2.75	3.79	2.28
	mm	110	67	70	96	58
24	ins.	5.06	X	3.78	4.44	2.75
	mm	129	X	96	113	70
25	ins.	4.64	2.81	2.81	3.94	2.28
	mm	118	71	71	100	58
26	ins.	6.53	X	3.75	4.91	3.19
	mm	166	X	95	125	81
27	ins.	8.22	X	5.50	5.47	4.87
	mm	209	X	140	139	124
28	ins.	6.53	X	3.66	4.91	3.19
	mm	166	X	93	125	81
29	ins.	7.03	X	4.38	5.06	4.40
	mm	179	X	111	129	112

① Valves must be mounted with solenoid vertical and upright.
* DC dimensions slightly larger.

Constr. Refs. 1, 2

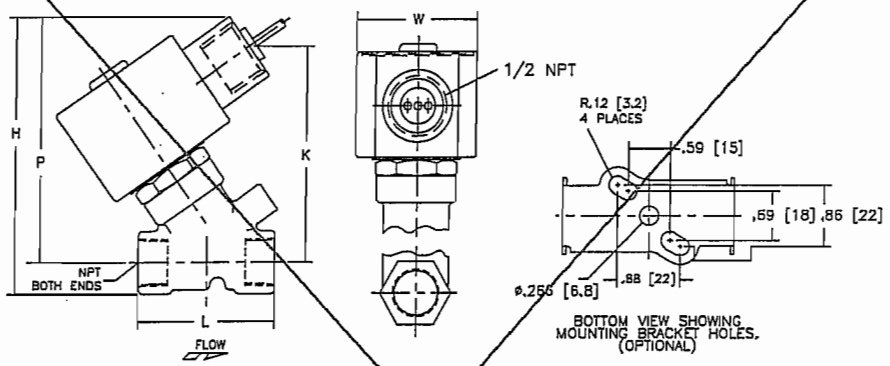

Constr. Ref. 13

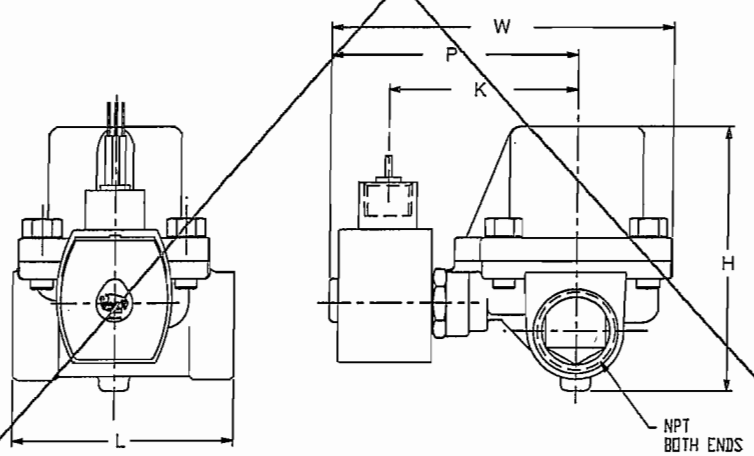

Constr. Refs. 5-9, 11, 20, 21, 23 , 25, 37,38

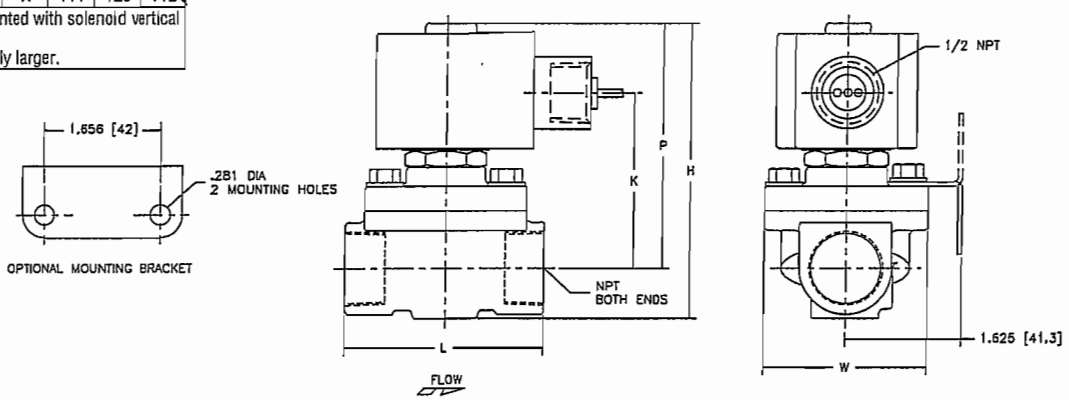

Installation & Maintenance Instructions

2–WAY INTERNAL PILOT–OPERATED SOLENOID VALVES
NORMALLY OPEN OPERATION
2″ OR 2½″ NPT

SERIES
8210
8211

Form No.V6297R2

NOTICE: See separate solenoid installation and maintenance instructions for information on: Wiring, Solenoid Temperature, Cause of Improper Operation, Coil or Solenoid Replacement.

DESCRIPTION

Series 8210 valves are 2–way normally open, internal pilot operated solenoid valves designed for general service. These valves are made of rugged forged brass and have an integral adjustable bleed device for controlling the opening and closing speed of the piston. Series 8210 valves are supplied with general purpose solenoid enclosure.

Series EF8210 or 8211 valves are the same as Series 8210 except they are provided with an explosionproof/watertight solenoid enclosure.

OPERATION

Normally Open: Valve is open when solenoid is de–energized; closed when energized.

IMPORTANT: Minimum operating pressure differential required is 5 psi.

Adjustable Bleed Device

Series 8210 valves have an integral adjustable bleed device for controlling the opening and closing speed of the piston. When valve leaves the factory, the bleed adjusting screw (metering pin) has been preset to provide quick shockless closing for most applications. If faster or slower closing is required, adjust the screw (metering pin) as follows:

1. Turn metering pin in (clockwise) as far as possible without over tightening. Then back out metering pin (counterclockwise) two complete turns. From this point, adjustments may be made to suit system.
2. Turn metering pin clockwise for slower closing.
3. Turn metering pin counterclockwise for faster closing.

INSTALLATION

Check nameplate for correct catalog number, pressure, voltage, frequency, and service. Never apply incompatible fluids or exceed pressure rating of the valve. Installation and valve maintenance to be performed by qualified personnel.

Future Service Considerations

Provision should be made for performing seat leakage, external leakage, and operational tests on the valve with a nonhazardous, noncombustible fluid after disassembly and reassembly.

Temperature Limitations

For maximum valve ambient and fluid temperatures, refer to chart below. Check catalog number prefix on nameplate to determine the maximum temperatures.

Watt Rating / AC/DC	Catalog Number Prefix	Solenoid Class	Maximum Ambient Temp.	Maximum Fluid Temp.
15.4 or 16.1 / AC	None, KF, SF or SC	F	125°F (51.7°C)	180°F (82°C)
	HT, KH, ST or SU	H	140°F (60°C)	180°F (82°C)
16.8 / DC	None or HT	F or H	77°F (25°C)	150°F (65°C)

Positioning

This valve is designed to perform properly when mounted in any position. However, for optimum life and performance, the solenoid should be mounted vertically and upright to reduce the possibility of foreign matter accumulating in the solenoid base sub–assembly area.

Piping

Connect piping or tubing to valve according to markings on valve body. Apply pipe compound sparingly to male pipe threads only. If applied to valve threads, the compound may enter the valve and cause operational difficulty. Avoid pipe strain by properly supporting and aligning piping. When tightening the pipe, do not use valve or solenoid as a lever. Locate wrenches applied to valve body or piping as close as possible to connection point.

⚠ CAUTION: To protect the solenoid valve, install a strainer or filter, suitable for the service involved, in the inlet side as close to the valve as possible. Clean periodically depending on service conditions. See ASCO Series 8600, 8601 and 8602 for strainers.

MAINTENANCE

⚠ WARNING: To prevent the possibility of personal injury or property damage, turn off electrical power, depressurize valve, and vent fluid to a safe area before servicing the valve.

Note: It is not necessary to remove the valve from the pipeline for repairs.

© Automatic Switch Co. MCMXCVIII All Rights Reserved. Printed in U.S.A.

Cleaning

All solenoid valves should be cleaned periodically. The time between cleanings will vary depending on the medium and service conditions. In general, if the voltage to the coil is correct, sluggish valve operation, excessive noise or leakage will indicate that cleaning is required. In the extreme case, faulty valve operation will occur and the valve may fail to open or close. Clean strainer or filter when cleaning the valve.

Preventive Maintenance

- Keep the medium flowing through the valve as free from dirt and foreign material as possible.
- While in service, the valve should be operated at least once a month to ensure proper opening and closing.
- Depending on the medium and service conditions, periodic inspection of internal valve parts for damage or excessive wear is recommended. Thoroughly clean all parts. If parts are worn or damaged, install a complete ASCO Rebuild Kit.

Causes of Improper Operation

- **Incorrect Pressure:** Check valve pressure. Pressure to valve must be within range specified on nameplate.
- **Excessive Leakage:** Disassemble valve and clean all parts. If parts are worn or damaged, install a complete ASCO Rebuild Kit.

Valve Disassembly

1. Disassemble valve in an orderly fashion. Use exploded views for identification and placement of parts.
2. Remove solenoid; see separate instructions.
3. Unscrew solenoid base sub–assembly using special wrench adapter supplied in Rebuild Kit (Wrench Adapter Kit Order No. K218950).
4. Remove solenoid base sub–assembly, core, plugnut assembly, and solenoid base gasket.
5. Unscrew adapter and remove disc holder assembly, disc holder spring, and adapter gasket.
6. For normal maintenance, it is not necessary to remove the valve seat. However, if valve seat removal is required, use a 7/16″ socket wrench.
7. Dislodge retainer from metering pin passageway. Then remove metering pin with gasket by turning it in a counterclockwise direction. Remove metering pin gasket from metering pin.
8. Remove bonnet screw, valve bonnet, piston spring, piston assembly, support, lip seal, body gasket, and body passage gasket.
9. Remove aspirator tube and disc with disc gasket from piston.
10. All parts are now accessible to clean or replace. If parts are worn or damaged, install a complete ASCO Rebuild kit.

Valve Reassembly

1. Reassemble valve using exploded views for identification and placement of parts.
2. Lubricate the solenoid base gasket, body gasket, body passage gasket, metering pin gasket, and the surface of the piston which contacts the lip seal with DOW CORNING® 200 Fluid lubricant or an equivalent high–grade silicone fluid.
3. Lubricate disc and disc gasket with DOW CORNING® 111 Compound lubricant or an equivalent high–grade silicone grease.
4. Position body gasket, body passage gasket, and support in valve body.
5. Install aspirator tube and disc with disc gasket in piston.
6. Position lip seal, flanged end out, onto piston assembly. Install piston assembly with lip seal into support in valve body cavity.
7. Replace piston spring, valve bonnet, and bonnet screws. Torque bonnet screws in a crisscross manner to 144± 15 in–lbs [16,3 ± 1,7 Nm].
8. Replace valve seat with a small amount of thread compound on the seat threads. Torque valve seat to 65 ± 15 in–lbs [7,3 ± 1,7 Nm].
9. Install metering pin with metering pin gasket into valve body. Replace retainer and refer to ***Adjustable Bleed Device*** section for metering pin adjustment.
10. Install adapter gasket, disc holder spring, disc holder assembly and adapter. Torque adapter to 175 ± 25 in–lbs [19,8 ± 2,8 Nm].
11. Replace solenoid base gasket, plugnut assembly, core (small end up) and solenoid base sub–assembly. Torque adapter to 175 ± 25 in–lbs [19,8 ± 2,8].
12. Replace solenoid base gasket, plugnut assembly, retainer and refer to ***Adjustable Bleed Device*** section for metering pin adjustment.
13. Install solenoid, see separate instructions and make electrical hookup.

⚠ WARNING: To prevent the possibility of personal injury or property damage, check valve for proper operation before returning to service. Also perform internal seat and external leakage tests with a nonhazardous, noncombustible fluid.

14. Restore line pressure and electrical power supply to valve.
15. After maintenance is completed, operate the valve a few times to be sure of proper operation. A metallic *click* signifies the solenoid is operating.

ORDERING INFORMATION FOR ASCO REBUILD KITS

Parts marked with an asterisk (*) in the exploded view are supplied in Rebuild Kits. When Ordering Rebuild Kits for ASCO valves, order the Rebuild Kit number stamped on the valve nameplate. If the number of the kit is not visible, order by indicating the number of kits required, and the Catalog Number and Serial Number of the valve(s) for which they are intended.

Torque Chart

Part Name	Torque Value in Inch–Pounds	Torque Value in Newton–Meters
Solenoid Base Sub–Assembly	175 ± 25	19,8 ± 2,8
Bonnet Screws	144 ± 15	16,3 ± 1,7
Valve Seat	65 ± 15	7,3 ± 1,7

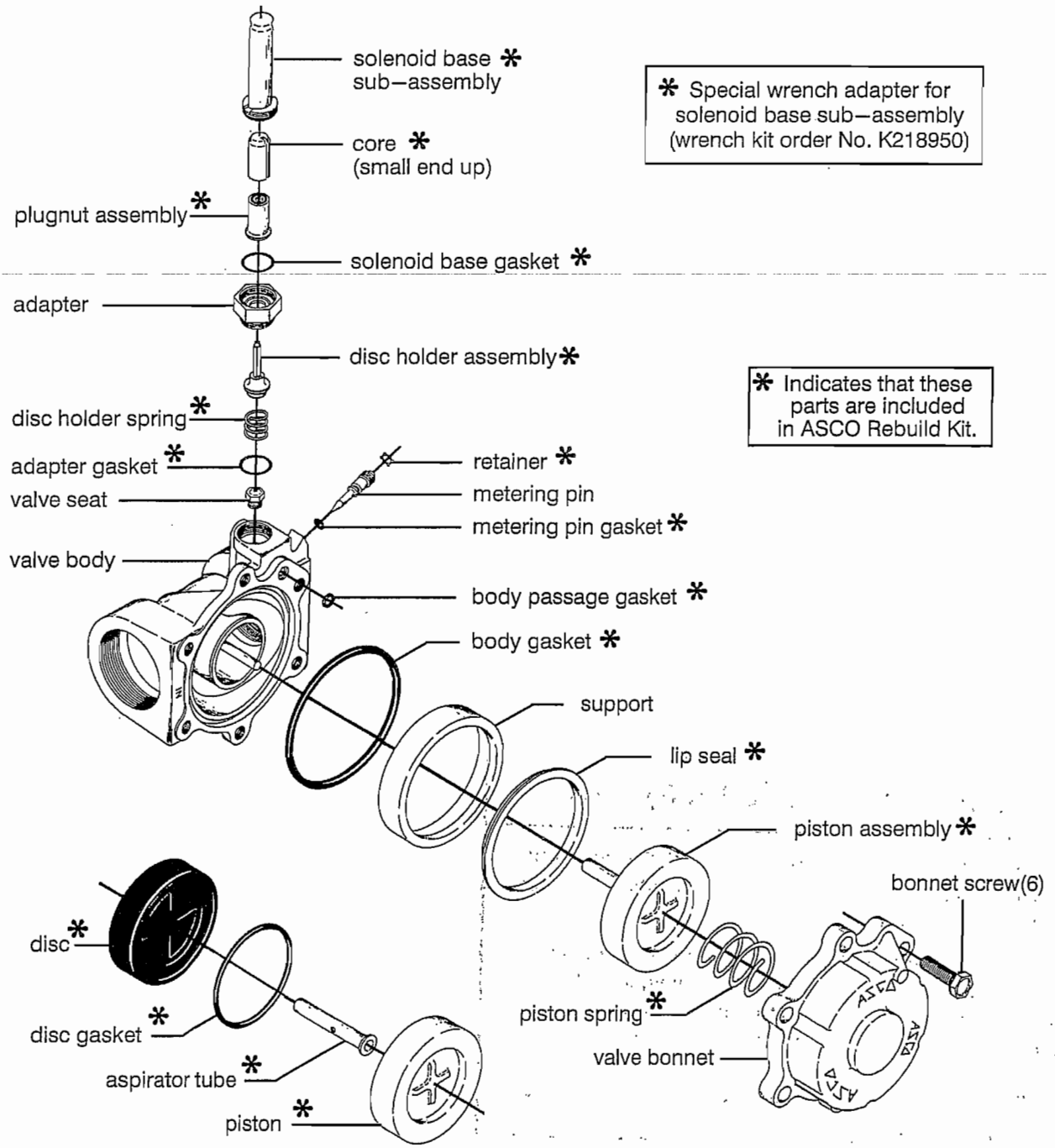

Figure 1. Series 8210 Valve without solenoid.

ASCO Valves Automatic Switch Co. 50–60 Hanover Road, Florham Park, New Jersey 07932

Earth Tech (Canada) Inc.

Reviewed for general conformance with design intent. Responsibility for detailed design in the shop drawings rests with the Contractor.

Responsibility for verification and correlation of field dimensions, fabrication process, techniques of construction, installation and coordination of all parts of the work rests with the Contractor.

REVIEWED ✓

REVIEWED AS MODIFIED

REVISE AND RE-SUBMIT

NOT REVIEWED

Project No. C28/16/79538

Date: 11/9/06 By: [illegible]

SMART BOB LEVEL SENSOR

Smart Bob II

Inventory Measurement System

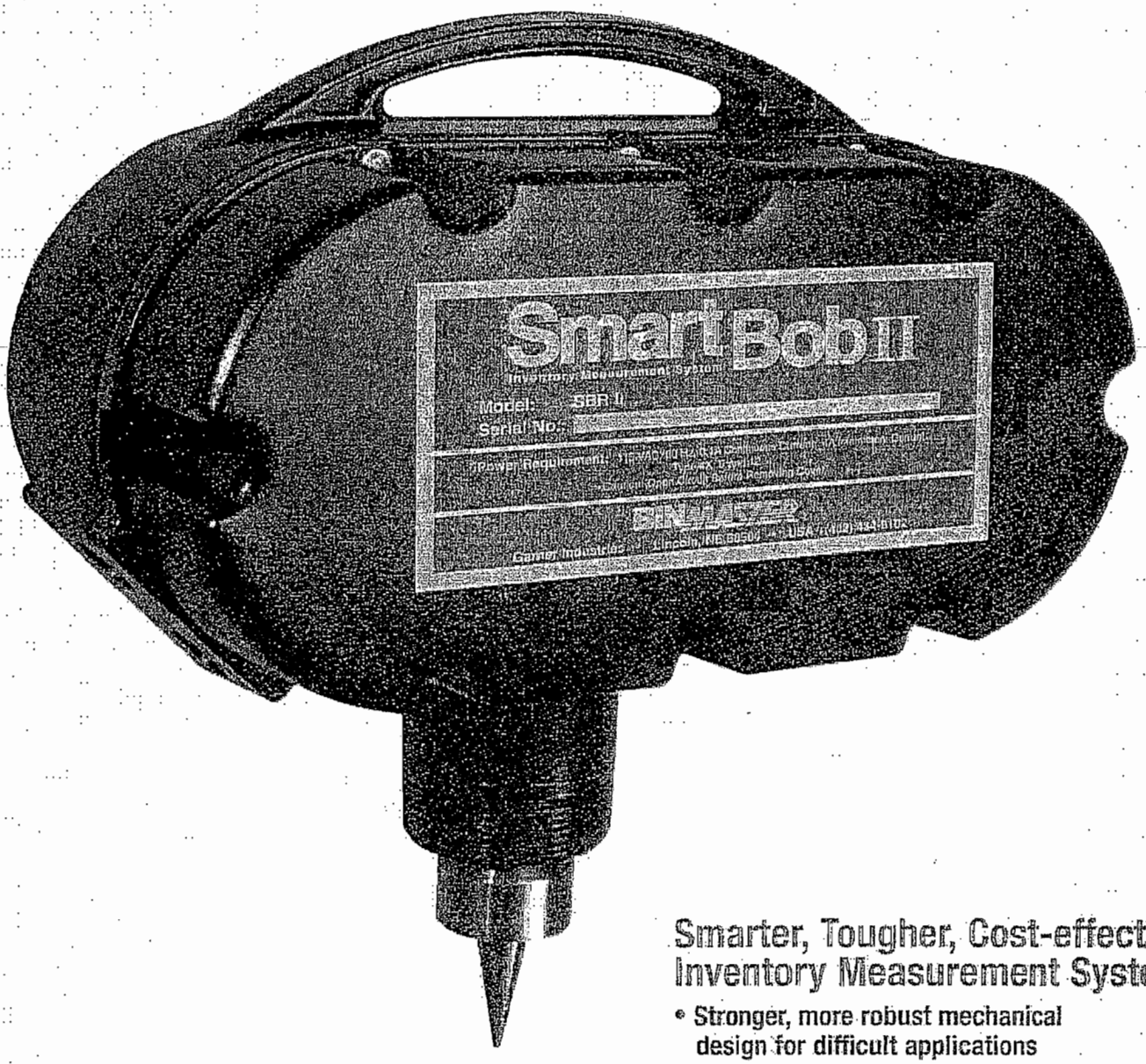

Smarter, Tougher, Cost-effective Inventory Measurement System.

- Stronger, more robust mechanical design for difficult applications
- New sleek, strong, and lightweight molded Polypropylene housing
- Enhanced electronics for expanded diagnostics and communication capabilities
- No field calibration or adjustment
- Powerful Windows-based PC program
- Measurement range: up to 150 feet
- Two year warranty

There's nothing remotely like it.

New SmartBob II Design

Combines technological advances and common sense to give you the strongest and smartest inventory measurement system on the market. The new, robust design of its Remote Sensor (SBR II) will provide years of maintenance-free service in vessels up to 150 feet. It's built tough to cut through demanding applications where sonic pulses or high frequency signals can be stopped dead in their tracks.

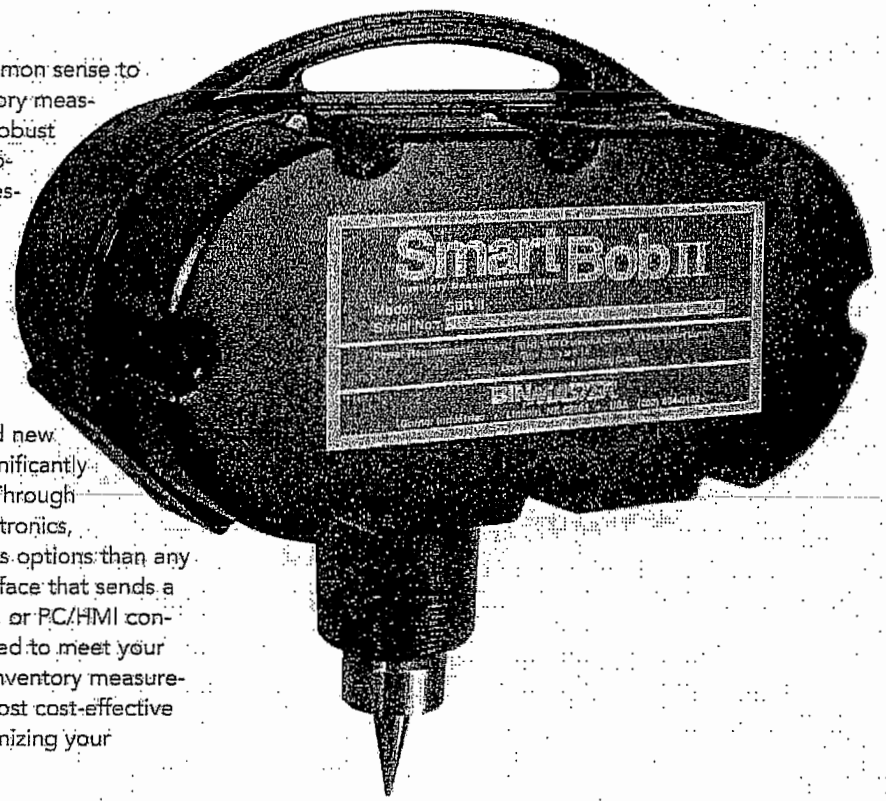

Real Smart

We've refined our technology and designed new innovations into SmartBob II to create a significantly advanced inventory measurement system. Through digital signal processing and advanced electronics, SmartBob II gives you more communications options than any other system. From a simple PLC/DCS interface that sends a 4-20mA output to our push-button console, or PC/HMI controlled system, SmartBob II can be configured to meet your specific application. We've made the best inventory measurement system even smarter, providing the most cost-effective and easiest-to-implement solution for maximizing your inventory control.

And Versatile, Too

SmartBob II handles the demands of virtually any application, thanks to a wide range of accessory options. SmartBob II can be outfitted with angled mounting flanges for sloped roofs, an assortment of sensor probes, and a specially-designed Pneumatic Air Sweep, which is useful in applications where any liquid or foreign material must be removed before the line enters the mechanical cavity of the remote.

Proven Applications

SmartBob technology has done it all. Whether it's chunk coal in a coal-fired power plant or fine granular solids in a plastic processor's material storage silo, SmartBob II technology can handle it. Airborne dust, echo, steam, temperature changes or material densities pose no problem to SmartBob II. This system is capable of measuring all your liquid, large granular, or powders and dry bulk solids applications.

World-Class Customer Service

BinMaster employees put the needs of our customers at the center of all we do. We're proud of our 40-year history of service, quality and integrity. You can depend on us.

How SmartBob II Works

When SmartBob II's remote is commanded to take a measurement, the motor releases stainless steel cable from the supply pulley, causing the weighted sensor probe to quickly descend from the top of the vessel to the surface of the material.

During the descent, the remote measures the length of cable dispensed. A microcontroller counts the pulses from an internal encoder that produces 80 pulses per foot. When the sensor probe touches the material surface, measurement information is transmitted, and pulse generation is momentarily stopped. The absence of these pulses immediately causes the motor to reverse and retract the sensor probe to its neutral position at the top of the vessel.

When the sensor probe is fully retracted, the probe's cap seats in a specially designed sealed flange. An electronic torque control reduces motor torque during the last 12 inches of the retract cycle. This assures maximum pull strength throughout the entire measurement cycle, and a soft stop to protect the motor. The retract distance is also measured and compared to the descend measurement to assure the sensor probe has fully retracted.

Electronic Features

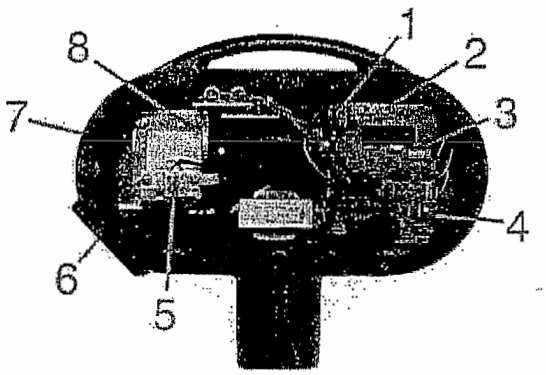

1. Removable wiring terminals make for easy installation.
2. Test buttons to cycle remote from top of storage vessel.
3. Dip switch panel to set each remote with an individual address.
4. Protected optical sensor wheel that pulses at 80 times per foot.
5. Can be powered by either 110 or 16 VAC.
6. Dual conduit entries.
7. Water and dust proof sealed electrical cavity designed for easy access.
8. Heavy duty direct drive reversible motor with electronic torque control provides maximum pull strength throughout the measurement cycle.

Mechanical Features

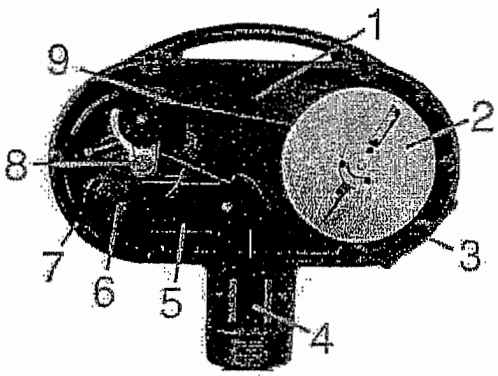

1. Electronics completely sealed from the mechanical cavity.
2. Cable leveling supply pulley eliminates cable overlap and tangling.
3. Air purge connection standard.
4. Cleaning brush cavity with removable plate for easy access.
5. Pulley scraper keeps timing pulley channels free of any foreign materials.
6. Sealed bearings, for trouble-free operation.
7. Fool-proof captive pulley system eliminates cable from jumping off pulleys.
8. Idler arm brake with adjustable spring tension design to stop the sensor probe from sinking or sliding down the angle of repose.
9. Stainless Steel cable with 270-lb Tensile strength, stronger than any other brand on the market.

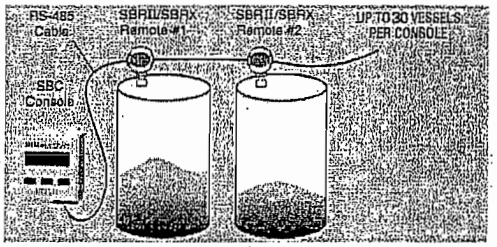

Push Button Console Controlled System

System runs manually from a SBC Console which can control from 1 to 30 SmartBob II Remotes. A measurement is initiated with a push of a button, giving accurate inventory readings in feet-of-product, feet-to-product, and percent full. The last measurement on each remote is stored in a non-volatile memory.

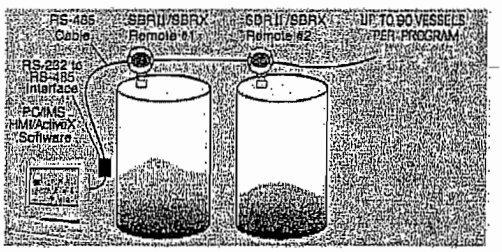

PC/ActiveX Controlled SmartBob System

System is designed to work in conjunction with an IBM compatible personal computer using BinMaster's Inventory Management System (IMS) software. This system can control from 1 to 90 SmartBob II Remotes. The software provides a graphical representation of the measurement in distance, weight and percent full. The IMS software also provides current inventory, inventory history, alarms, date/time, measurement scheduling capabilities, and alarm set-points. An ActiveX control is also available to provide serial communication capability to talk to SmartBob II hardware directly from an HMI software package.

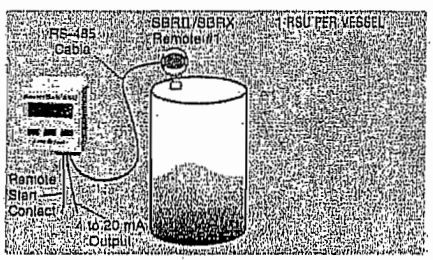

PLC/DCS Controlled SmartBob System

System designed for a simple interface between the SmartBob II Remote and a PLC or DCS system. The PLC/DCS can initiate a measurement by providing a dry contact closure to the BinMaster Remote Start Unit (RSU). The PLC/DCS can then retrieve the measurement from an analog 4-20mA current loop output from the RSU. The RSU will also provide a remote display. One RSU is required for each SBR II Remote in the system.

1. SBC Console:

A push-button console with LCD readout used to manually operate up to 30 SmartBob II remotes. Console readout includes distance of product, distance to product, and percent full.

2. Remote Start Unit (RSU):

Designed to be a simple interface between the SmartBob II remote and a PLC/DCS System using an analog 4-20mA current loop output.

3. Remote Display Unit (RDU):

A listening device that provides an external display at each vessel while maintaining control of the system from a central location. The RDU also provides a 4-20mA current loop output.

4. Inventory Management Software (IMS):

The industry's most powerful Windows-based PC program, designed to intelligently manage inventory in up to 90 vessels. Software provides graphical representation of the measurement in distance, weight, volume, and percent full. Also provides current inventory, inventory history, alarms, date/time, measurement scheduling capabilities, and alarm set points.

5. ActiveX™ Control:

ActiveX™ Control provides direct serial communication capability to talk to SmartBob II hardware from an HMI (Human Machine Interface) software package. HMI includes such software packages as Wonderware Intouch™, Intellution iFix™, Rockwell software RSView32™, and others. HMI packages have incorporated ActiveX capability into their software to take advantage of a wide variety of ActiveX controls. Other software packages such as Microsoft Visual Basics and Internet Explorer may use ActiveX to communicate with the SmartBob II.

6. Pneumatic Air Sweep:

The SmartBob II may use an air sweep to remove foreign objects off the cable while the remote is actively retracting the sensor probe before it can enter into the mechanical cavity. For interface measurement and other special applications.

7. Mounting Flanges:

SmartBob II comes standard with a flat mounting flange, but can be ordered with angled mounting flanges (5°, 10°, or 30°) for use mounting on sloped-roof vessels.

8. Standard Spike Sensor Probe:

SmartBob II is shipped with a cast Stainless Steel sensor probe. Spike is designed for granulars with angle of repose, and also can be used to torpedo through a liquid to find and measure submersed solids in an interface application.

9. Inverted Cone:

Hollow Stainless Steel inverted cone is designed for liquids and light bulk solids and powders. Teflon® coated cone is available for sticky or corrosive materials.

10. Digestible Bottle:

Polyethylene bottle can be filled with material compatible with the material stored in the vessel. It is called a digestible bottle because it can pass through a rotary valve or screw conveyor.

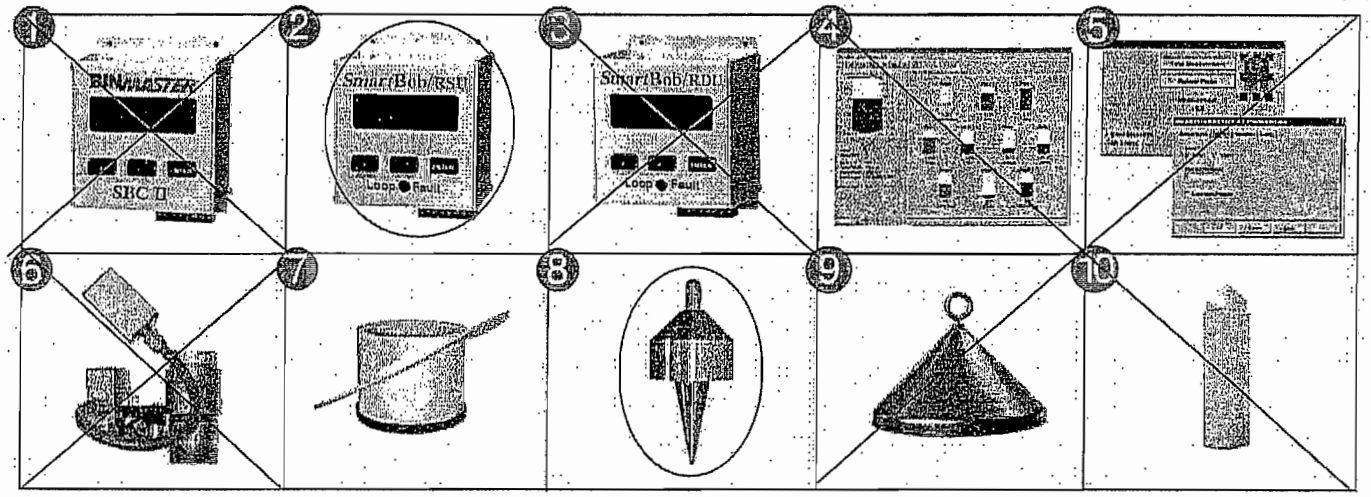

BINMASTER®

Taking Control...To A Higher Level

Division of Garner Industries
4200 North 48th Street
Lincoln, NE 68504
Fax (402) 434-9133
(402) 434-9102
www.binmaster.com

For more information call 1-800-278-4241

ActiveX, Windows '95, '98, NT, Visual Basic and Internet Explorer are trademarks or registered trademarks of Microsoft Corporation.

Intellution and iFix are trademarks or registered trademarks of Intelution.

Genesis32 and Graphwork 32 are trademarks or registered trademarks of Icenics.

Wonderware and Wonderware Intouch are trademarks or registered trademarks of Wonderware Corporation.

RSView32 is a trademark or registered trademark of Rockwell Software, Inc

Simplicity is a trademark or registered trademark of GE.

BINMASTER®

Taking Control...To A Higher Level

SBR II
*SMART*BOB REMOTE UNIT

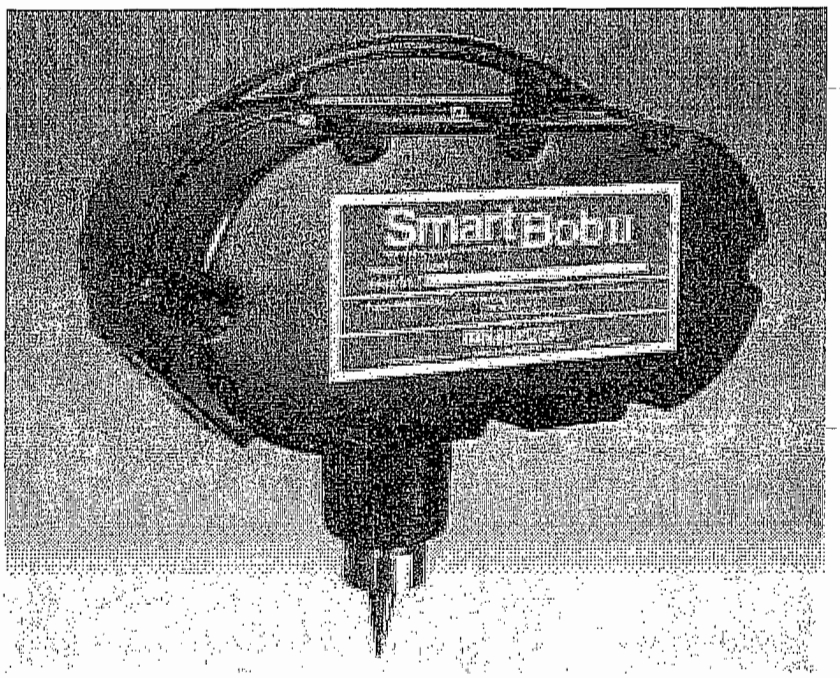

INSTALLATION and OPERATING INSTRUCTIONS
PLEASE READ CAREFULLY

BINMASTER®
Division of Garner Industries
7201 No. 98th Street - Lincoln, NE 68507-9741
(402) 434-9102 Fax (402) 434-9133
www.binmaster.com

925-0150

TABLE OF CONTENTS

SMARTBOB REMOTE UNIT

	Page #
SPECIFICATIONS	3
INTRODUCTION	4, 5
INSTALLATION	6, 7, 8, 9
TESTING THE REMOTE OPERATION	9
AIR PURGE	10
WARRANTY AND CUSTOMER SERVICE	10
STAINLESS STEEL CABLE REPLACEMENT	11, 12
PROBE OPTIONS	13
LIMITING STAINLESS STEEL CABLE	14
MOUNTING OPTIONS	15
MOUNTING TEMPLATE	16

*SMART*BOB SPECIFICATIONS

Power Requirements:	115 VAC 60 Hz (230 VAC Models are available)
Power Consumption:	12 VA Continuous 48 A Intermittent
Current Draw (RMS):	0.1 A Continuous 0.4 A Intermittent
Temperature :	-40° F to +185° F (-40° C to +85° C)
Measurement Range:	90 ft Standard 150 ft Maximum
Accuracy:	0.25%
Repeatability:	0.1 ft (0.03m)
Resolution:	0.15 inch (0.4 cm)
Communication:	RS 485 Half Duplex
Wiring Distance:	4000 ft (1220m)
Enclosure: SmartBob SBRII	Type 4X, 5, 12
Mounting:	3" NPT Floor Flange
Conduit Entry:	3/4" NPT
Weight:	25 lbs.
Width:	15 3/4"
Height:	14 3/4"
Depth:	7 1/2"
Air Purge Entry:	1/4" NPT
Cable:	316 Stainless Steel 0.063" Diameter Nylon Coated

1.0 INTRODUCTION

The BinMaster SmartBob SBR II is a remote on demand level measurement sensing unit. It is designed to work in conjunction with a Personal Computer running Windows 95/98, NT, or 2000, a BinMaster SBC console, or a BinMaster RSU (Remote Start Unit). In operation, the SBR II lowers a weighted Bob to the surface of the product, measuring the distance. A microcontroller counts the pulses from an encoder. Slack in the cable is detected when the Bob reaches the surface, causing the motor to reverse and retract the Bob. The retract distance is also measured for diagnostic purposes to assure that the Bob fully retracts.

General system diagrams showing use with a personal computer, SBC console, and an RSU controller are illustrated in Figures 1a through 1c. Inventory Management System (IMS) Software that runs on Windows 95/98, NT, or 2000 controls up to 30 SmartBob units from one location with the standard RS485 interface box. With the RS485 expansion box the IMS software can control up to 90 SmartBob Remote Units using 3 RS485 ports with up to 30 SmartBob's on each port. The IMS software also provides current inventory, extended inventory, measuring scheduling, and vendor managed inventory and site status through faxing and E-mail. The SBC is a stand alone console which can control and display measurements of up to 30 vessels. The RSU is a single vessel controller and provides 4-20 mA output for interfacing with other control systems.

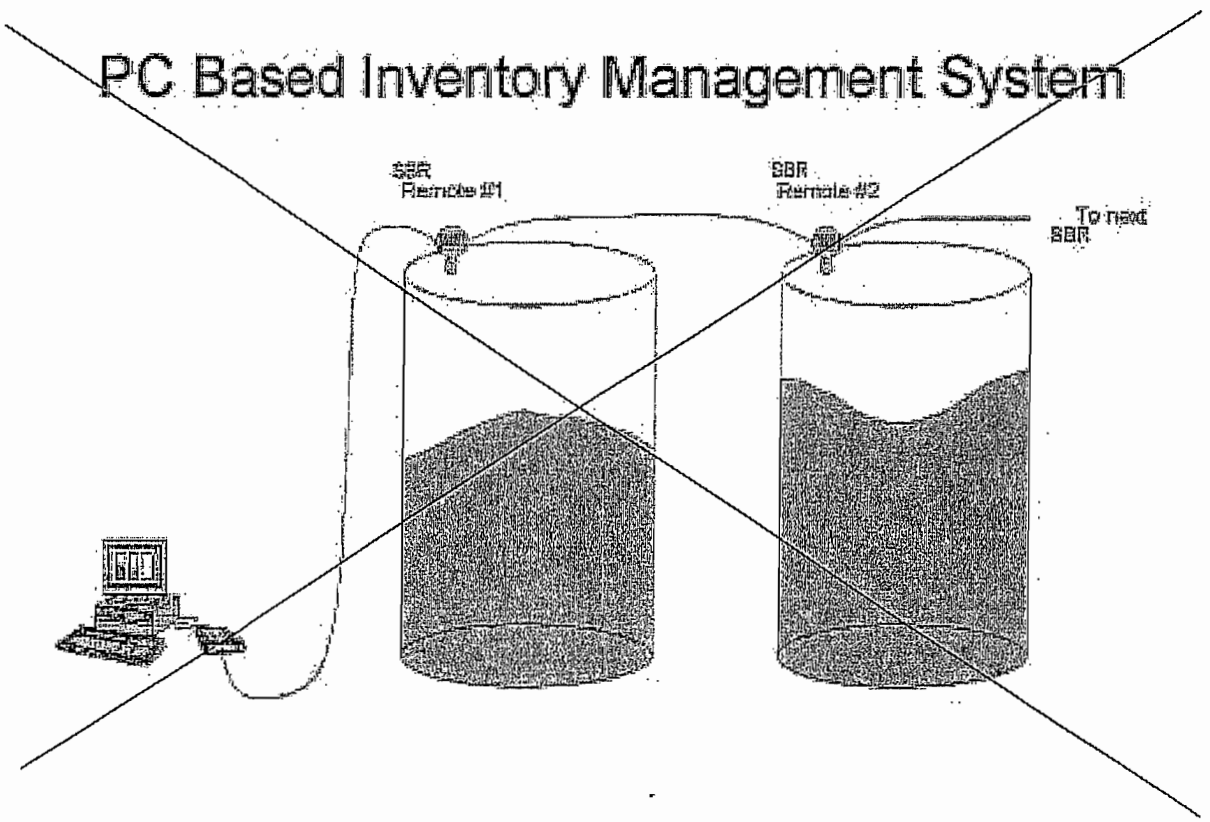

Console Driven BinBob System

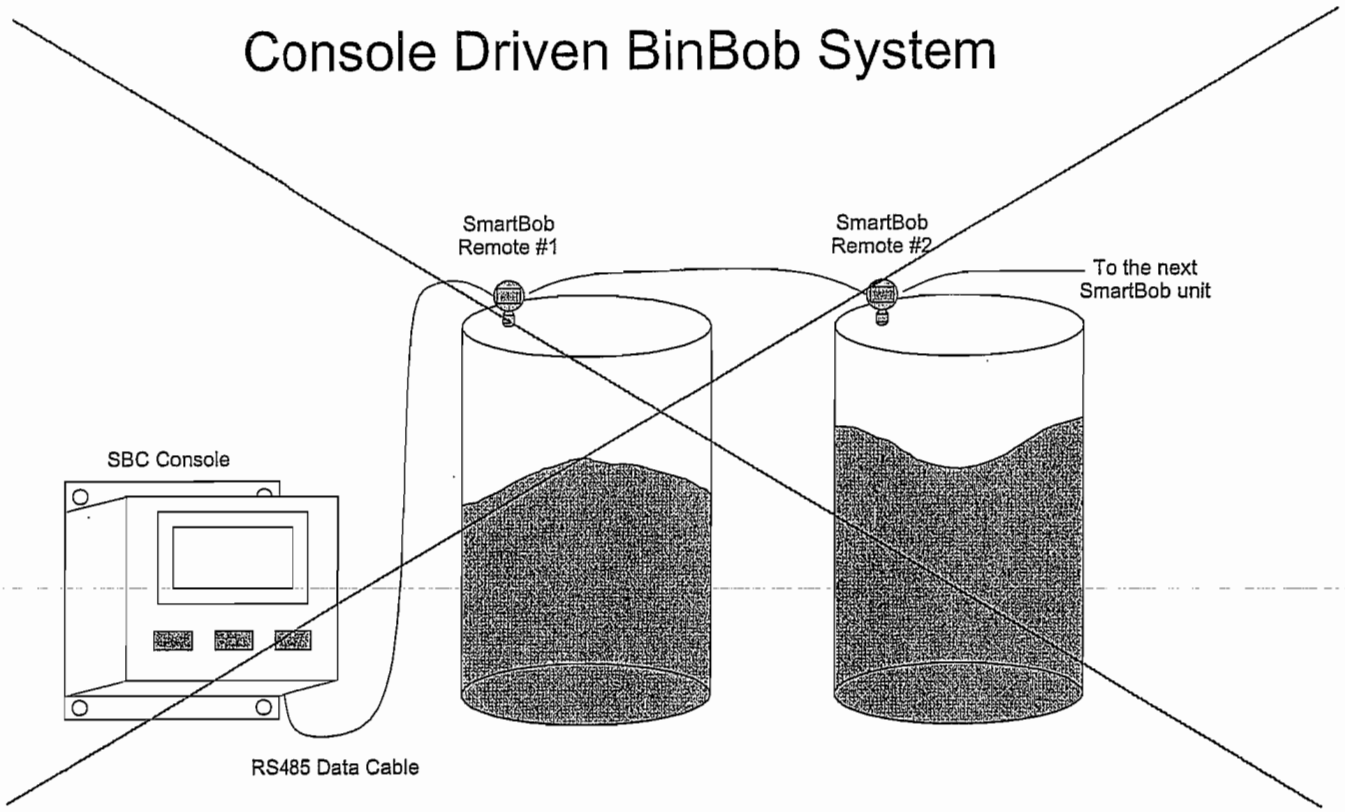

Figure 1b

RSU Controlled System

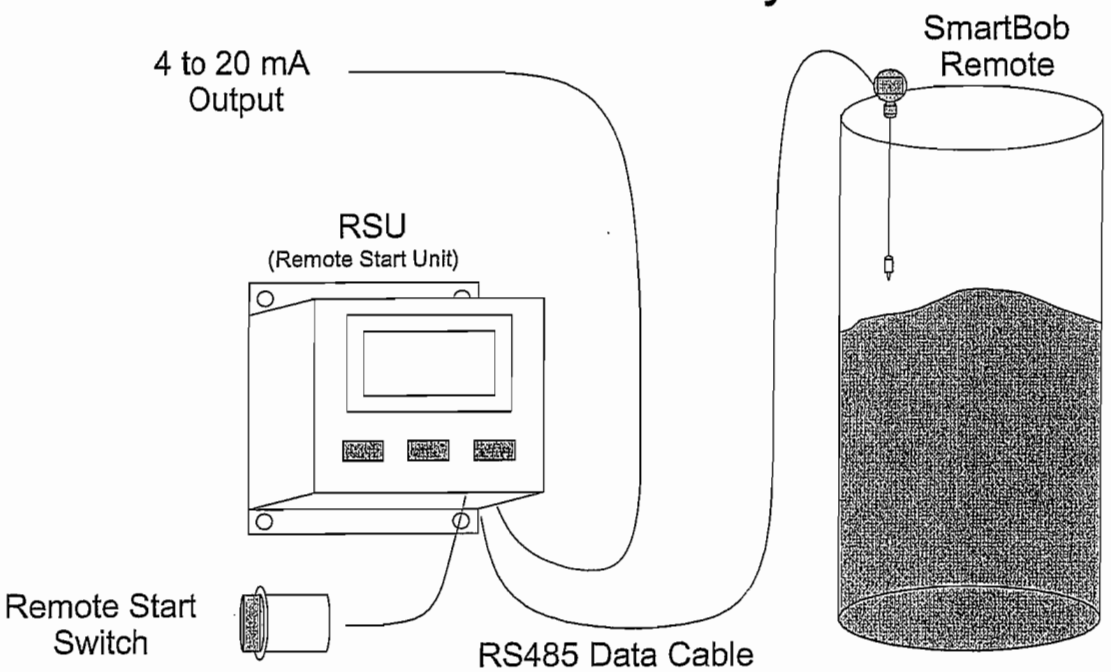

Figure 1c

2.0 INSTALLATION

2.1 LOCATION AND MOUNTING

The SmartBob remote unit is mounted on the top of the storage vessel using a 3 inch NPT coupling. If a 3 inch NPT floor flange is used, it must be on a flat level surface to provide a vertical mount for the unit. For measuring dry solids which involve an angle of repose, it is recommended that the unit be mounted 1/6th of the vessel diameter in from the side, see Figure 2. A mounting flange template is provided on last page of this manual for a standard 3 inch NPT floor flange with a 5-1/8 inch bolt circle.

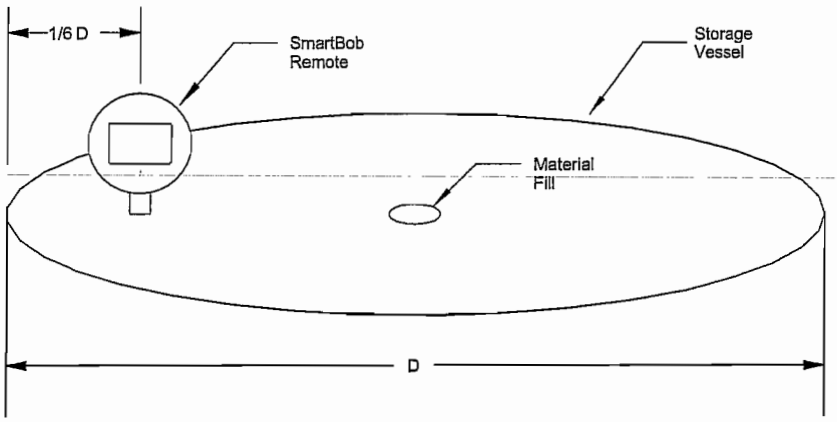

2.2 RS485 NETWORK WIRING

The SBR II remotes are connected by a shielded twisted pair cable referred to as an RS485 network. This cable must run from one remote to the next connecting each remote in a daisy-chained fashion with **no stub branch runs**. All connections should be made at the terminals on the circuit board, see Figures 3 & 4. Be careful to **maintain the proper wiring polarity** at each terminal connection. The shield on the RS485 cable must be connected to the **shield** terminal on the circuit board, not to the enclosure ground.

2.3 NETWORK TERMINATION

On each SBR II remote unit, SBC, RSU, and RS485 interface module, there is a network termination switch, labeled NTR. The two units on each end of the RS485 daisy chained network **must** have their NTR switch placed in the "ON" position. All other units on the network must have this switch set to the "OFF" position. See Figures 3.

FIGURE 4

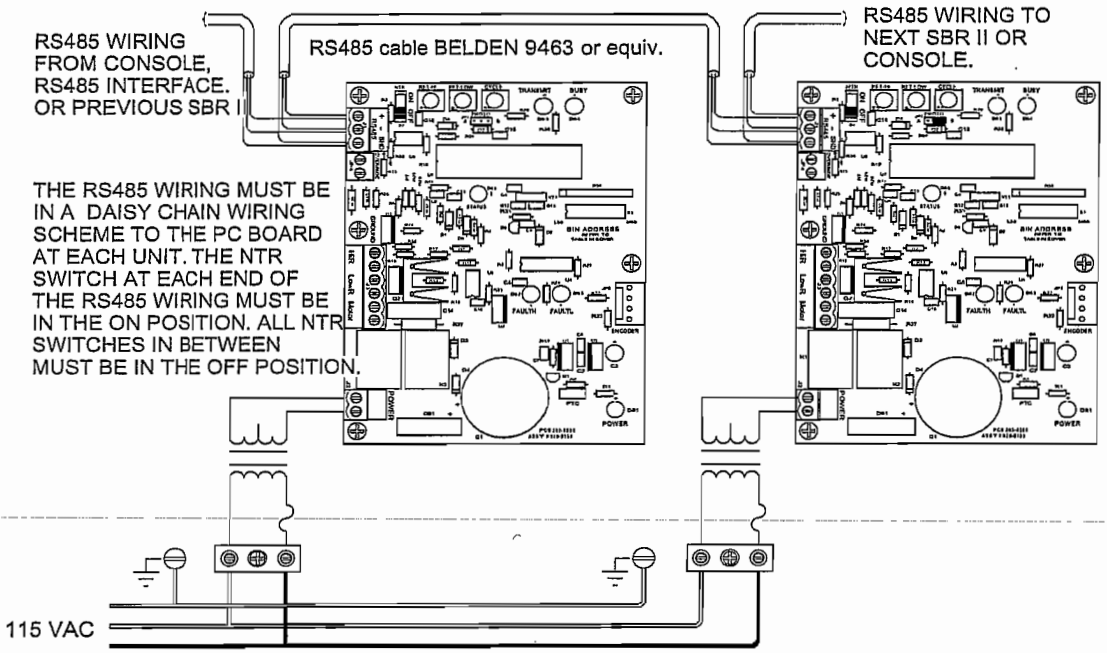

2.4 POWER WIRING

All wiring should be installed according to local and/or national codes. Refer to Figures 3 & 4 for the connection of the power wiring. The AC input power connects to the 2 pole terminal block located on the motor mount bracket. The neutral wire should be connected to the terminal on the left and the "Hot" conductor connected to the terminal on the right. The terminal on the right wires thru the fuse to the transformer.

A green ground screw is provided in the SmartBob enclosure for electrically grounding the unit. A good electrical ground must to connected to the SBR II for safety and to bleed off any static electrical charges that might built up in the SBR II. It is recommended that both the power and the RS485 communication cable be ran in metal conduit.

2.5 SETTING THE ADDRESS

The BinMaster IMS software version 1.xx can accommodate up to 30 SBR II remote units with the standard RS485 interface. IMS version 2.xx softwarecan accommodate up to 90 SBR II remote units with the RS485 expansion box by expanding to 3 RS485 ports with up to 30 remote units per port. IMS version 3.xx software can accommodate up to 130 Bins with up to 256 SBR II remote units. The SBC console can accommodate up to 30 SBR II remote units, Therefore a unique address must be set for each remote. Refer to Figure 4 and Table 1 regarding setting the address for remote. This figure and table are also located on the inside cover of the SBR II enclosure. The RSU console only operates with one SmartBob remote. The address of a remote unit operating with an RSU must be set to #1.

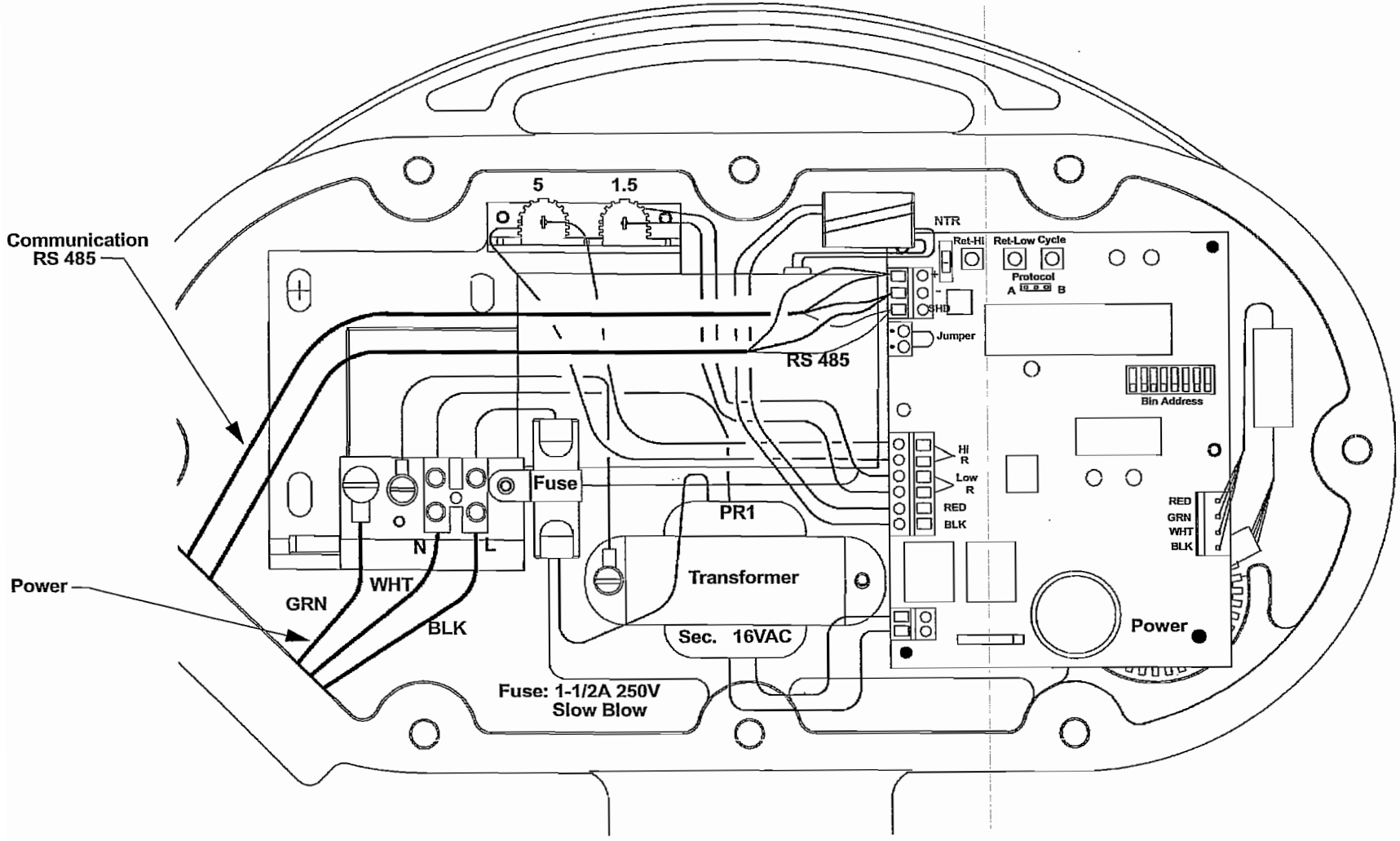

SBR II Wiring Diagram

FIGURE 3

BIN ADDRESS DIPS SWITCH

BIN ADDRESS	DIP SWITCH SETTING								BIN ADDRESS	DIP SWITCH SETTING							
	1	2	3	4	5	6	7	8		1	2	3	4	5	6	7	8
1	ON	OFF	OFF	OFF	OFF	OFF	OFF	OFF	66	OFF	ON	OFF	OFF	OFF	OFF	ON	OFF
2	OFF	ON	OFF	OFF	OFF	OFF	OFF	OFF	67	ON	ON	OFF	OFF	OFF	OFF	ON	OFF
3	ON	ON	OFF	OFF	OFF	OFF	OFF	OFF	68	OFF	OFF	ON	OFF	OFF	OFF	ON	OFF
4	OFF	OFF	ON	OFF	OFF	OFF	OFF	OFF	69	ON	OFF	ON	OFF	OFF	OFF	ON	OFF
5	ON	OFF	ON	OFF	OFF	OFF	OFF	OFF	70	OFF	ON	ON	OFF	OFF	OFF	ON	OFF
6	OFF	ON	ON	OFF	OFF	OFF	OFF	OFF	71	ON	ON	ON	OFF	OFF	OFF	ON	OFF
7	ON	ON	ON	OFF	OFF	OFF	OFF	OFF	72	OFF	OFF	OFF	ON	OFF	OFF	ON	OFF
8	OFF	OFF	OFF	ON	OFF	OFF	OFF	OFF	73	ON	OFF	OFF	ON	OFF	OFF	ON	OFF
9	ON	0FF	OFF	ON	OFF	OFF	OFF	OFF	74	OFF	ON	OFF	ON	OFF	OFF	ON	OFF
10	OFF	ON	OFF	ON	OFF	OFF	OFF	OFF	75	ON	ON	OFF	ON	OFF	OFF	ON	OFF
11	ON	ON	OFF	ON	OFF	OFF	OFF	OFF	76	OFF	OFF	ON	ON	OFF	OFF	ON	OFF
12	OFF	OFF	ON	ON	OFF	OFF	OFF	OFF	77	ON	OFF	ON	ON	OFF	OFF	ON	OFF
13	ON	OFF	ON	ON	OFF	OFF	OFF	OFF	78	OFF	ON	ON	ON	OFF	OFF	ON	OFF
14	OFF	ON	ON	ON	OFF	OFF	OFF	OFF	79	ON	ON	ON	ON	OFF	OFF	ON	OFF
15	ON	ON	ON	ON	OFF	OFF	OFF	OFF	80	OFF	OFF	OFF	OFF	ON	OFF	ON	OFF
16	OFF	OFF	OFF	OFF	ON	OFF	OFF	OFF	81	ON	OFF	OFF	OFF	ON	OFF	ON	OFF
17	ON	OFF	OFF	OFF	ON	OFF	OFF	OFF	82	OFF	ON	OFF	OFF	ON	OFF	ON	OFF
18	OFF	ON	OFF	OFF	ON	OFF	OFF	OFF	83	ON	ON	OFF	OFF	ON	OFF	ON	OFF
19	ON	ON	OFF	OFF	ON	OFF	OFF	OFF	84	OFF	OFF	ON	OFF	ON	OFF	ON	OFF
20	OFF	OFF	ON	OFF	ON	OFF	OFF	OFF	85	ON	OFF	ON	OFF	ON	OFF	ON	OFF
21	ON	OFF	ON	OFF	ON	OFF	OFF	OFF	86	OFF	ON	ON	OFF	ON	OFF	ON	OFF
22	OFF	ON	ON	OFF	ON	OFF	OFF	OFF	87	ON	ON	ON	OFF	ON	OFF	ON	OFF
23	ON	ON	ON	OFF	ON	OFF	OFF	OFF	88	OFF	OFF	OFF	ON	ON	OFF	ON	OFF
24	OFF	OFF	OFF	ON	ON	OFF	OFF	OFF	89	ON	OFF	OFF	ON	ON	OFF	ON	OFF
25	ON	OFF	OFF	ON	ON	OFF	OFF	OFF	90	OFF	ON	OFF	ON	ON	OFF	ON	OFF
26	OFF	ON	OFF	ON	ON	OFF	OFF	OFF	91	ON	ON	OFF	ON	ON	OFF	ON	OFF
27	ON	ON	OFF	ON	ON	OFF	OFF	OFF	92	OFF	OFF	ON	ON	ON	OFF	ON	OFF
28	OFF	OFF	ON	ON	ON	OFF	OFF	OFF	93	ON	OFF	ON	ON	ON	OFF	ON	OFF
29	ON	OFF	ON	ON	ON	OFF	OFF	OFF	94	OFF	ON	ON	ON	ON	OFF	ON	OFF
30	OFF	ON	ON	ON	ON	OFF	OFF	OFF	95	ON	ON	ON	ON	ON	OFF	ON	OFF
31	ON	ON	ON	ON	ON	OFF	OFF	OFF	96	OFF	OFF	OFF	OFF	OFF	ON	ON	OFF
32	OFF	OFF	OFF	OFF	OFF	ON	OFF	OFF	97	ON	OFF	OFF	OFF	OFF	ON	ON	OFF
33	ON	OFF	OFF	OFF	OFF	ON	OFF	OFF	98	OFF	ON	OFF	OFF	OFF	ON	ON	OFF
34	OFF	ON	OFF	OFF	OFF	ON	OFF	OFF	99	ON	ON	OFF	OFF	OFF	ON	ON	OFF
35	ON	ON	OFF	OFF	OFF	ON	OFF	OFF	100	OFF	OFF	ON	OFF	OFF	ON	ON	OFF
36	OFF	OFF	ON	OFF	OFF	ON	OFF	OFF	101	ON	OFF	ON	OFF	OFF	ON	ON	OFF
37	ON	OFF	ON	OFF	OFF	ON	OFF	OFF	102	OFF	ON	ON	OFF	OFF	ON	ON	OFF
38	OFF	ON	ON	OFF	OFF	ON	OFF	OFF	103	ON	ON	ON	OFF	OFF	ON	ON	OFF
39	ON	ON	ON	OFF	OFF	ON	OFF	OFF	104	OFF	OFF	OFF	ON	OFF	ON	ON	OFF
40	OFF	OFF	OFF	ON	OFF	ON	OFF	OFF	105	ON	OFF	OFF	ON	OFF	ON	ON	OFF
41	ON	OFF	OFF	ON	OFF	ON	OFF	OFF	106	OFF	ON	OFF	ON	OFF	ON	ON	OFF
42	OFF	ON	OFF	ON	OFF	ON	OFF	OFF	107	ON	ON	OFF	ON	OFF	ON	ON	OFF
43	ON	ON	OFF	ON	OFF	ON	OFF	OFF	108	OFF	OFF	ON	ON	OFF	ON	ON	OFF
44	OFF	OFF	ON	ON	OFF	ON	OFF	OFF	109	ON	OFF	ON	ON	OFF	ON	ON	OFF
45	ON	OFF	ON	ON	OFF	ON	OFF	OFF	110	OFF	ON	ON	ON	OFF	ON	ON	OFF
46	OFF	ON	ON	ON	OFF	ON	OFF	OFF	111	ON	ON	ON	ON	OFF	ON	ON	OFF
47	ON	ON	ON	ON	OFF	ON	OFF	OFF	112	OFF	OFF	OFF	OFF	ON	ON	ON	OFF
48	OFF	OFF	OFF	OFF	ON	ON	OFF	OFF	113	ON	OFF	OFF	OFF	ON	ON	ON	OFF
49	ON	OFF	OFF	OFF	ON	ON	OFF	OFF	114	OFF	ON	OFF	OFF	ON	ON	ON	OFF
50	OFF	ON	OFF	OFF	ON	ON	OFF	OFF	115	ON	ON	OFF	OFF	ON	ON	ON	OFF
51	ON	ON	OFF	OFF	ON	ON	OFF	OFF	116	OFF	OFF	ON	OFF	ON	ON	ON	OFF
52	OFF	OFF	ON	OFF	ON	ON	OFF	OFF	117	ON	OFF	ON	OFF	ON	ON	ON	OFF
53	ON	OFF	ON	OFF	ON	ON	OFF	OFF	118	OFF	ON	ON	OFF	ON	ON	ON	OFF
54	OFF	ON	ON	OFF	ON	ON	OFF	OFF	119	ON	ON	ON	OFF	ON	ON	ON	OFF
55	ON	ON	ON	OFF	ON	ON	OFF	OFF	120	OFF	OFF	OFF	ON	ON	ON	ON	OFF
56	OFF	OFF	OFF	ON	ON	ON	OFF	OFF	121	ON	OFF	OFF	ON	ON	ON	ON	OFF
57	ON	OFF	OFF	ON	ON	ON	OFF	OFF	122	OFF	ON	OFF	ON	ON	ON	ON	OFF
58	OFF	ON	OFF	ON	ON	ON	OFF	OFF	123	ON	ON	OFF	ON	ON	ON	ON	OFF
59	ON	ON	OFF	ON	ON	ON	OFF	OFF	124	OFF	OFF	ON	ON	ON	ON	ON	OFF
60	OFF	OFF	ON	ON	ON	ON	OFF	OFF	125	ON	OFF	ON	ON	ON	ON	ON	OFF
61	ON	OFF	ON	ON	ON	ON	OFF	OFF	126	OFF	ON	ON	ON	ON	ON	ON	OFF
62	OFF	ON	ON	ON	ON	ON	OFF	OFF	127	ON	ON	ON	ON	ON	ON	ON	OFF
63	ON	ON	ON	ON	ON	ON	OFF	OFF	128	OFF	OFF	OFF	OFF	OFF	OFF	OFF	ON
64	OFF	OFF	OFF	OFF	OFF	OFF	ON	OFF	129	ON	OFF	OFF	OFF	OFF	OFF	OFF	ON
65	ON	OFF	OFF	OFF	OFF	OFF	ON	OFF	130	OFF	ON	OFF	OFF	OFF	OFF	OFF	ON

2.6 EXTERNAL OVERRIDE

This feature can be used to prohibit measurements during a vessel filling cycle. The IMS software will notify the user that a measurement cannot be taken while a filling operation is in progress. Located on the SmartBob circuit board in the upper left corner (just below the RS485 terminals), is the terminal block labeled **OVERRIDE**. A connection must exist across these terminals for normal operation of the remote unit, see Figure 6. A contact on an external relay can be used to disable the remote unit during a fill cycle to prevent burying the Bob. The use of this feature is optional, if not used, leave the factory installed jumper in terminal block.

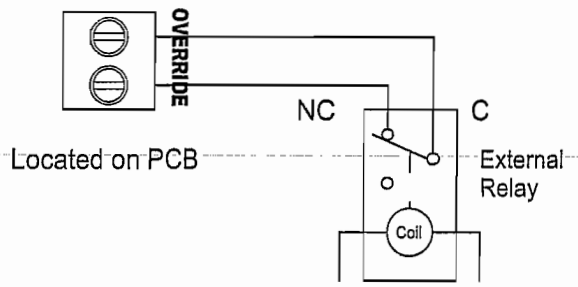

FIGURE 6

3.0 TESTING THE REMOTE OPERATION

IMPORTANT: Complete the **SmartBob INSTALLATION CHECKLIST**, included with this manual, before attempting to operate the units.

3.1 MANUAL OPERATION FROM REMOTE UNIT

Once the SmartBob Remote is installed and wired properly it can be manually cycled to verify proper operation. To perform the manual test:

- Open the electrical side of the remote unit.
- Press the CYCLE button located at the top of the printed circuit board. The unit will immediately lower the probe Bob to the surface and return.
- Replace the electrical side cover.

3.2 TROUBLESHOOTING

If the remote fails to cycle, verify that the Input Power is present at the terminal block and that the POWER LED located on the circuit board (in lower right corner), is lighted. This LED should be lighted whenever the power is present at the board terminals. If the unit still does not operate, consult the factory at 800 228-4241.

4.0 AIR PURGE SYSTEM

Located on the lower right side of each SmartBob remote unit is a 1/4" NPT air fitting. This fitting can be used to connect an external source of dry, clean air or non-combustible gas to the remote housing. By adding pressure to the remote housing that is slightly greater than that in the vessel, material and dust from the vessel is prevented from entering into the unit. The external pressure should be one (1) psi greater than the ambient pressure in the storage vessel and should be free from moisture and other contaminates.

5.0 WARRANTY AND CUSTOMER SERVICE

5.1 LIMITED WARRANTY

The manufacturer warrants this equipment for two (2) years according to the following terms:

1.) This warranty extends to the original purchaser only and commences on the date of original purchase. The original purchaser must mail to the manufacturer the "Warranty Registration" card to confirm the equipment purchase. Failure to do so may void the warranty.

2.) The manufacturer will repair or replace any part of this equipment found to be defective, provided such part is delivered prepaid, to the factory. Manufacturer's obligation is limited to the cost of material and labor to repair or replace and does not include transportation expenses.

3.) This warranty shall not apply to any product that has, in our judgement, been tampered with, altered, subject to misuse, neglect or accident. In addition, the warranty does not extend to repairs made necessary by normal wear.

4.) This warranty is in lieu of all other warranties, expressed or implied.

5.2 CUSTOMER SERVICE

BinMaster offers a toll-free Customer Service phone number, **800 228-4241**. You may call the Customer Service Department for technical and application assistance Monday through Friday from 8:00 AM to 5:00 PM Central Time. International customers call us at **(402) 434-9102** or reach us via **Fax** at **(402) 434-9133**. E-mail questions to "info@binmaster.com".

Note: This equipment has been tested and found to comply with the limits for a Class A digital device, pursuant to part 15 of the FCC Rules. These limits are designed to provide reasonable protection against harmful interference when the equipment is operated in a commercial environment. This equipment generates, uses, and can radiate radio frequency energy and, if not installed and used in accordance with the instruction manual, may cause harmful interference in which case the user will be required to correct the interference at their own expense.

Cable Replacement Instructions

1. Disconnect the power source. Remove the flat cover plate on the front of the remote housing.

NOTE: if you are replacing the entire supply pulley assembly, you should do steps 2 and 3 in reverse then skip step 4, 5 and 7

2. Remove one set of wiper brushes and thread the cable through the threaded mount and up through the brush cleaning chamber. The cable should pass in front of the remaining set of wiper brushes.

3. Thread the cable over the top of the back groove on the idler pulley then over the top of the timing pulley. Continue threading the cable around the timing pulley then around the bottom of the outside groove of the idler pulley. The cable then threads around the bottom and over the top of the idler arm pulley.

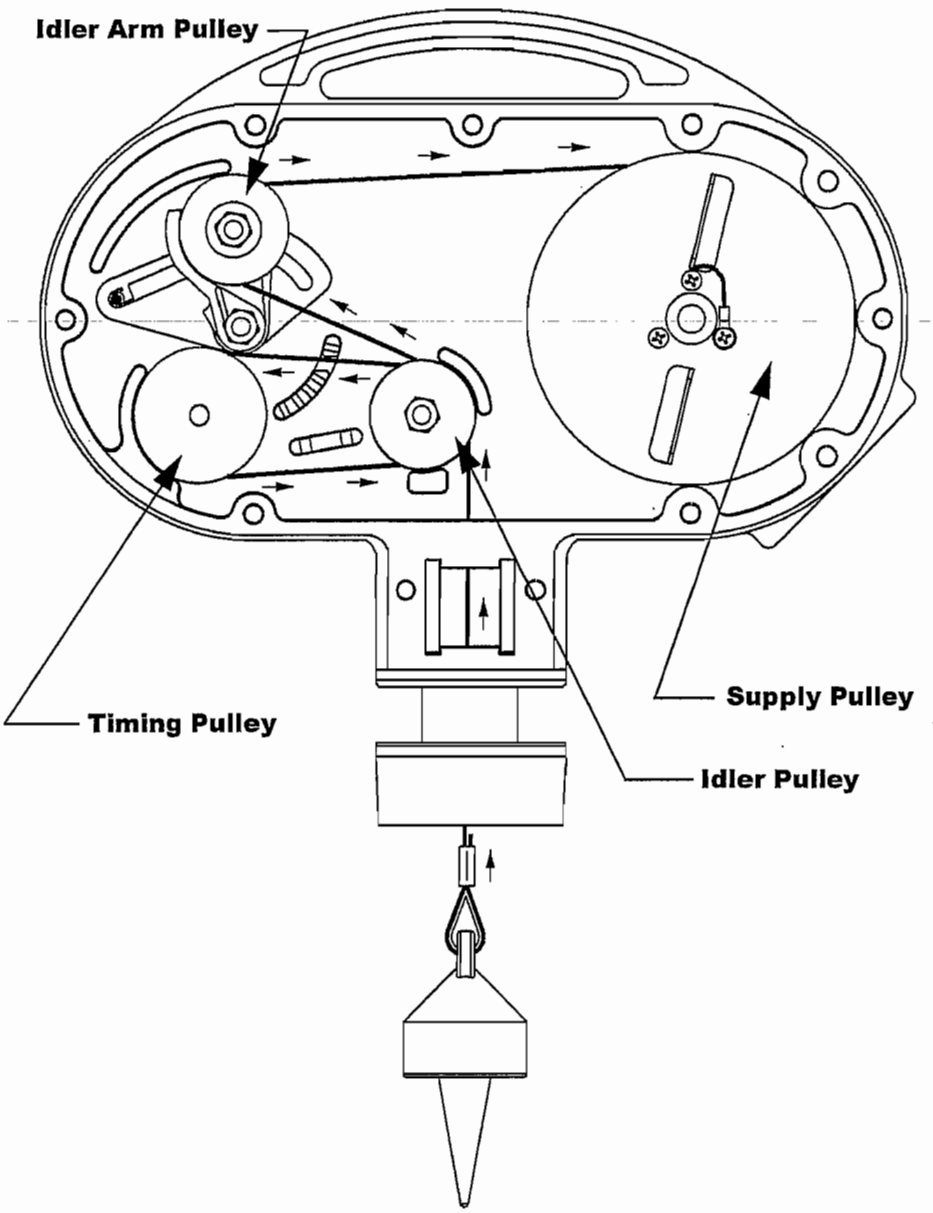

Figure 7

4. Before securing the cable to the supply pulley, crimp a sleeve on the cable about 18 inches from the end of the cable. This sleeve will limit the maximum length of cable that the unit can release. In operation, when the unit spools out all the cable, the sleeve will come in contact with the idler arm pulley and cause the unit to reverse and rewind the cable.

5. Thread the cable through the ring terminal. Strip 1/8 to 1/4 of the nylon jacket from the end of the cable. Pull the stripped end of the cable back into the ring terminal and crimp the two together. As shown in the picture, thread the ring terminal and the cable through the slot on the supply pulley flange. Fasten the ring terminal to the pulley using one of the #6 screws on the flange. This procedure will adequately ground the cable.

NOTE: At this point, you should refer to the manual instruction sheet "Limiting Stainless Steel Cable". Follow steps 2 through 6

6. Reconnect the power source.

7. Pull the cable taut. Load supply pulley by pressing (and hold) the "RET-HI" button located on the circuit board. Pressing this button will start the supply pulley turning in a clockwise direction, with the cable winding over the top. Keep the cable taut until the pulley is full. When pulley is full, release the "RET-HI" button.

8. Place the remaining wiper brush in the cleaning chamber and replace the cover.

Probe Options

BBP-1
This Polypropylene is designed for granular materials from 20 lbs. per cubic foot and greater.

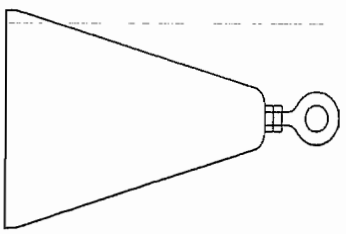

BBP-2
This Bob is a hollow inverted 6" cone made of stainless steel and is designed for bulk products with a density from 1.5 lbs. to 20 lbs. per cubic foot. This Bob may also be used in liquid applications.

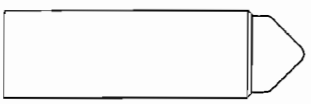

BBP-3
This Bob is designed for granular material with a density from 20 lbs. per cubic foot and greater. The BBP-3 Bob should be filled with a material that is compatible with the material that is stored in the storage bin. Total weight of the Bob when full should be 16 to 20 oz. The BBP-3 Bob is made from an engineering plastic which will not damage the material handling auger, in the unlikely event that the Bob should become separated from the unit.

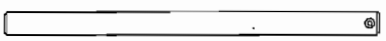

BBP-4
This submersible Bob is made of 316 stainless steel and was designed to penetrate a liquid measure the solid substance which lies at the bottom of that liquid.

Probe Options

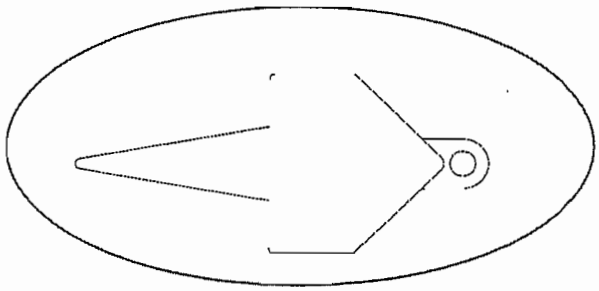

BBP-7 (Standard)
This stainless steel Bob is designed for granular materials from 20 lbs. per cubic foot and greater. This Bob is shipped standard with every SmartBob remote.

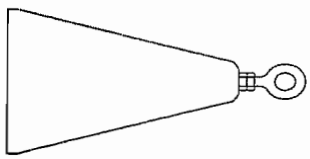

BBP-8
This Bob is a hollow inverted 4" cone made of stainless steel and is designed for bulk products with a density from 5 lbs. to 20 lbs. per cubic foot. This Bob may be used in liquid applications.

LIMITING STAINLESS STEEL CABLE
SBR II

It is important to limit the length of cable on the SBR remote, so that the bob is not lowered into an airlock, screw conveyor, or any other area that the bob might become trapped in. The SBR remote is shipped with 90' of cable unless otherwise specified. Disregard these instructions if the unit was ordered with the exact amount of cable necessary for your vessel. This procedure for limiting the cable should be done **before** the unit is installed:

1. Remove the cable from the supply pulley be pressing the "CYCLE" button on the top of the PC board. Keeping the cable taut, pull on the cable as the cable spools off the pulley. When the line is all paid out, the motor will reverse and try to rewind the cable. Hold the cable tight so it cannot rewind. The motor should now be shut off.

2. From the throat of the SBR II, measure the height of your vessel or the maximum distance you want the bob to travel into your vessel.

3. Cut the stainless steel cable at this distance.

4. Thread the stainless steel cable through the bob and thimble as shown below.

5. Insert the end of cable into the crimp and tighten the noose around the thimble. Crimp the sleeve around the cable.

6. Test crimp by pulling on the cable and bob.

7. Rewind the cable onto the supply pulley or lower the cable and bob into the vessel. To rewind onto the supply pulley: Pull the cable taut. Load the supply by pressing (and hold) the "RET-HI" button located on the circuit board. Pressing this button will start the supply pulley turning in a clockwise direction, with the cable winding over the top.

8. Continue installation of the unit on your vessel.

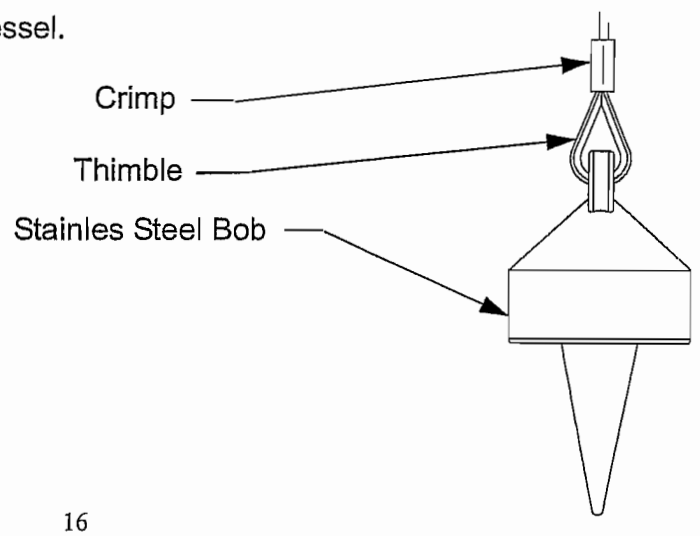

Mounting Options

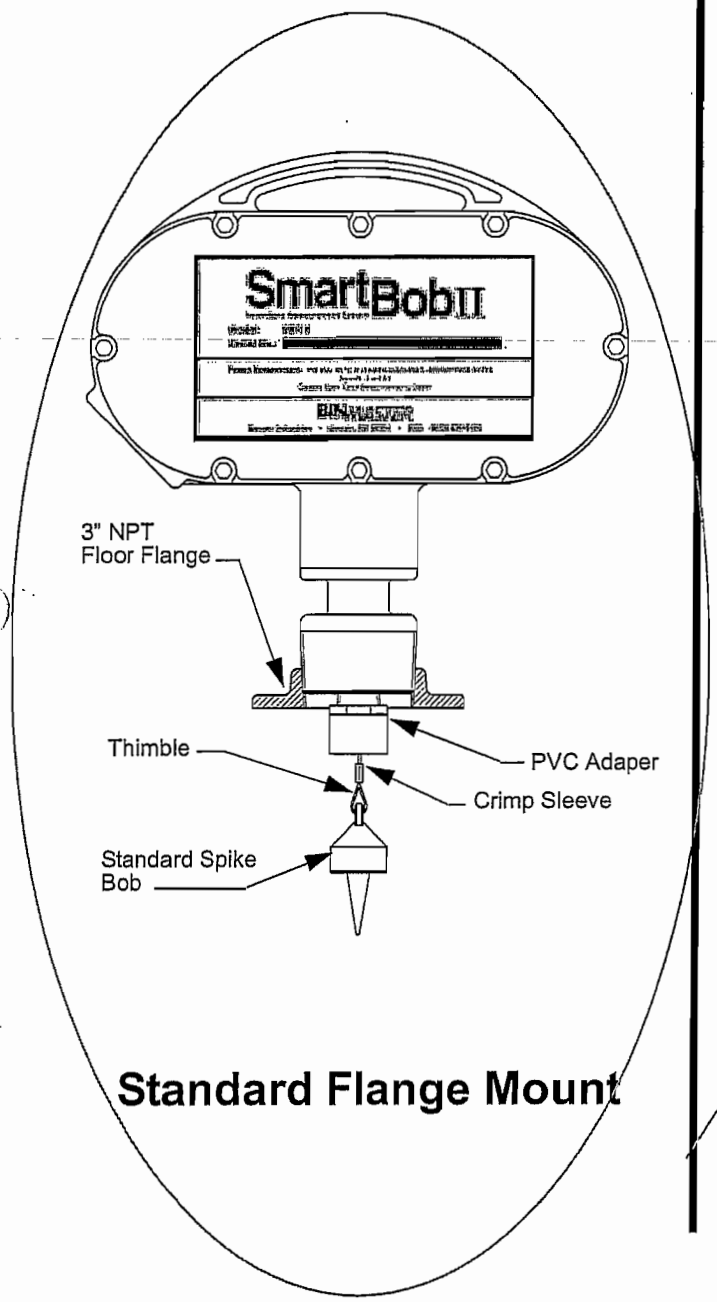

Standard Flange Mount

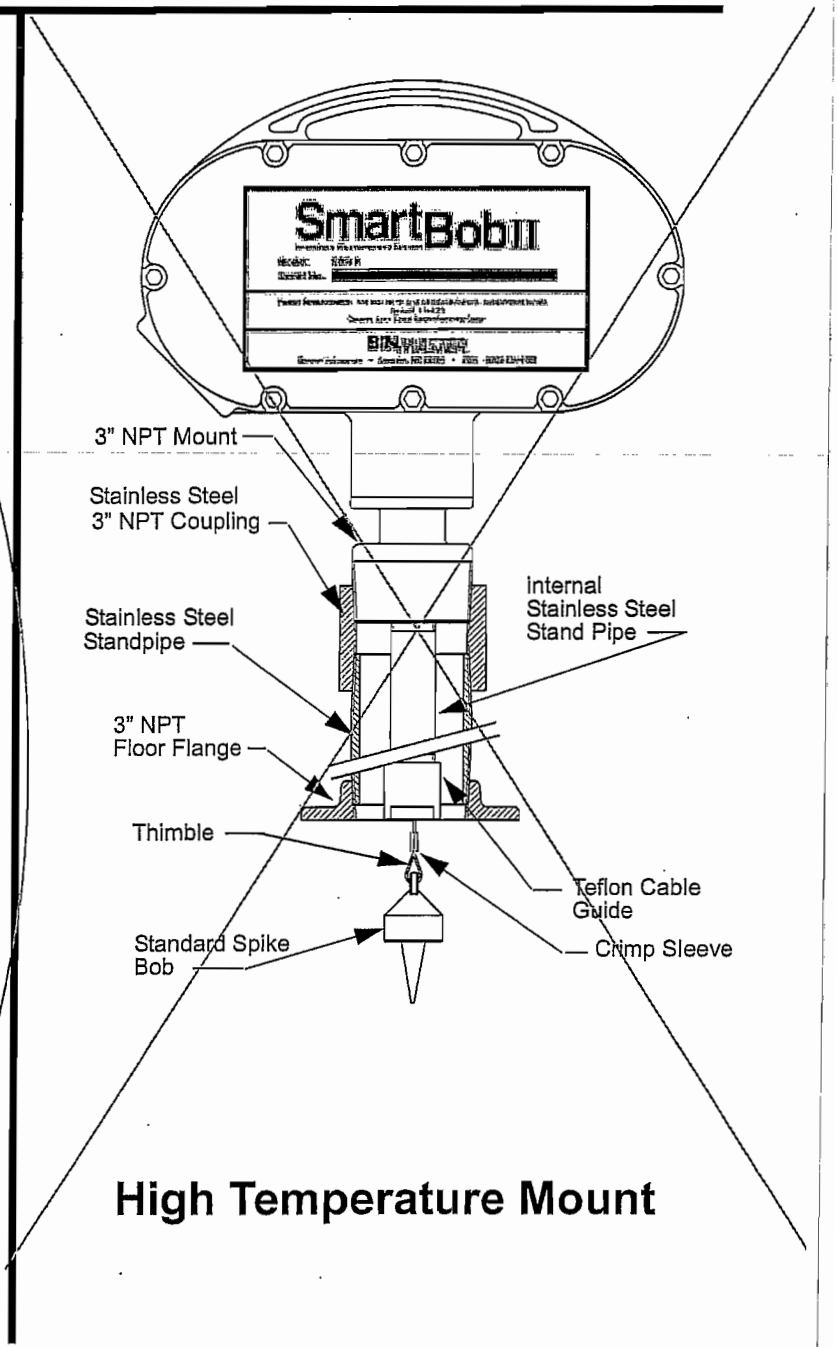

High Temperature Mount

SMARTBOB REMOTE MOUNTING TEMPLATE

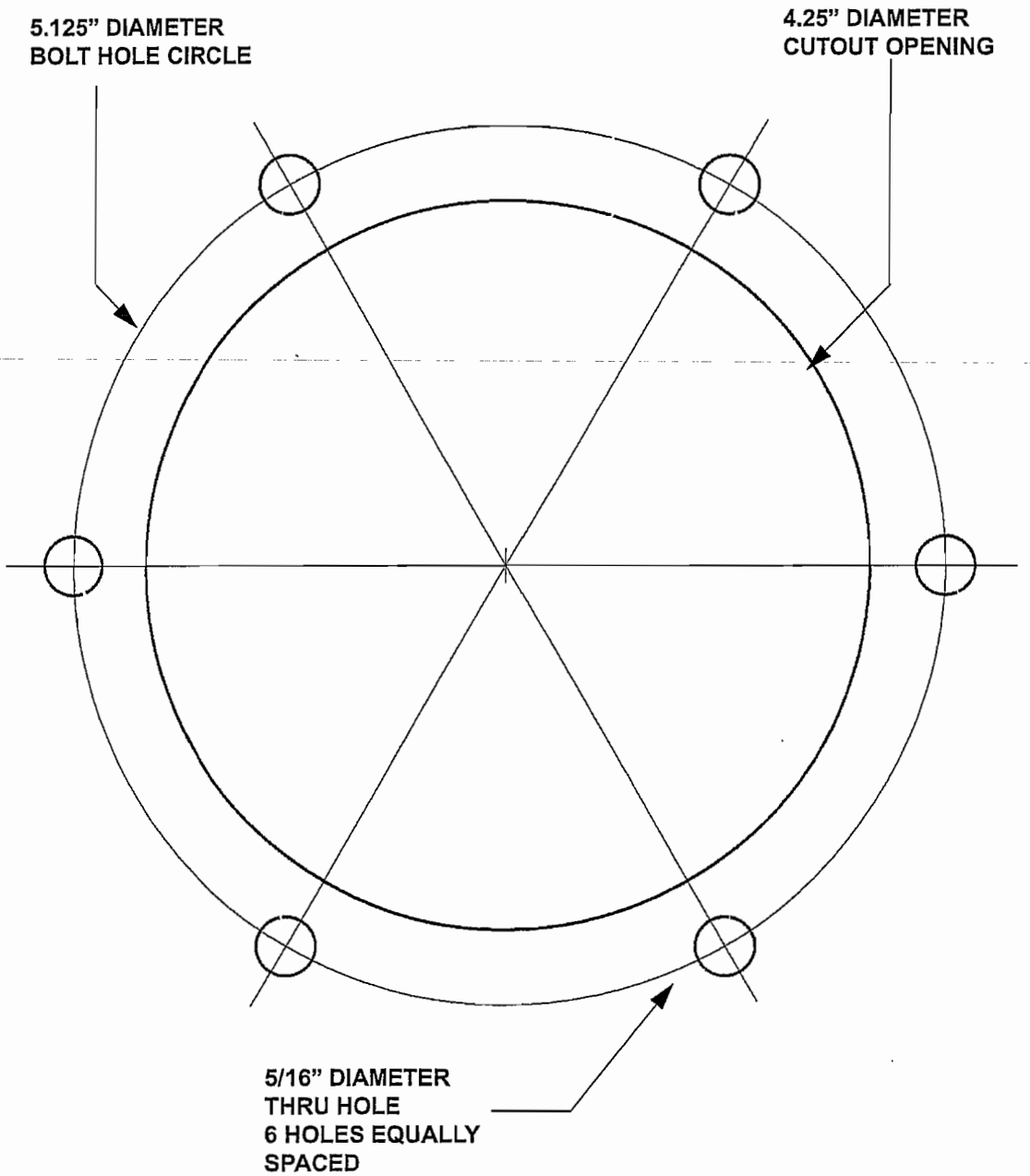

9270108.DGN

925-0150

BINMASTER®

Taking Control... To A Higher Level

*SMART*BOB
REMOTE START UNIT

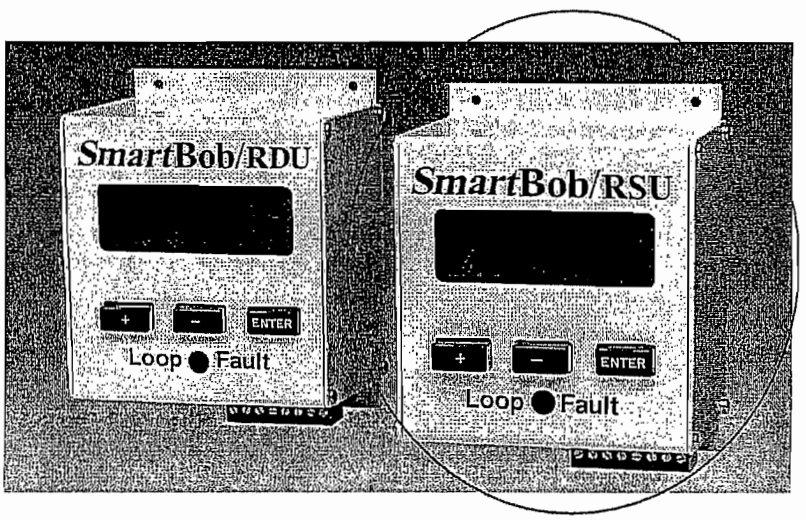

INSTALLATION and OPERATING INSTRUCTIONS
PLEASE READ CAREFULLY

BINMASTER®

Division of Garner Industries
7201 No. 98th Street P. O. Box 29709
Lincoln, NE 68507 Lincoln, NE 68529
(402) 434-9102 Fax (402)434-9133
www.binmaster.com

925-0119
Rev.2

REMOTE START UNIT

INTRODUCTION

The *Smart*Bob Remote Start Unit (RSU) is an optional accessory to the BinMaster *Smart*Bob System. The RSU provides the following enhancements to the *Smart*Bob System: an external start input, a 4-20mA current loop (analog) output, and a remote display or remote readout of the measurements. These enhancements allow for a simple interface between the *Smart*Bob System and Programmable Logic Controllers (PLC) or Distributed Control Systems (DCS). The PLC \ DCS can initiate a measurement by providing a dry contact closure to the RSU. The PLC can then retrieve the measurement from the analog 4-20mA current loop output on the RSU. The remote readout feature allows you to view the current measurement information at each vessel or in a control room away from the controlling PLC or DCS. The display provides distance to product, height of product, percentage of product in the storage vessel, and status of the bob. All measurements and user information is stored in nonvolatile memory; therefore, the information will not be lost if power is removed.

Note: This equipment has been tested and found to comply with the limits for a Class A digital device, pursuant to part 15 of the FCC Rules. These limits are designed to provide reasonable protection against harmful interference when the equipment is operated in a commercial environment. This equipment generates, uses, and can radiate radio frequency energy and, if not installed and used in accordance with the instruction manual, may cause harmful interference to radio communications. Operation of this equipment in a residential area is likely to cause harmful interference in which case the user will be required to correct the interference at his own expense.

INSTALLATION AND WIRING

The RSU requires a 16VAC-power connection, such as wall transformer P/N 388-0039, an RS-485 data connection, and an external start input. A 4-20mA current loop is also an available output to use. The wiring diagram is located directly below the pluggable terminal block on the RSU. Refer to Figure 1 on the last page on this manual for the interconnect wiring connections. The 16VAC power wires should be installed according to all local and/or national electrical codes. The recommended wire size for the power connection is 14 or 18 gauge wire. The RSU communicates with the *Smart*Bob remote via the RS-485 cable. This cable must be a good quality twisted pair with a shield. The shield must be connected to the (-) negative terminal of the 4-20mA loop. The maximum length for the RS-485 cable is 4000 feet. Please verify the polarity of the RS-485 wires during installation. The system will not work if RS-485 wires are reversed. The RSU will only communicate with one *Smart*Bob remote; therefore, the *Smart*Bob's address must be set to one (1). This is the factory default for the *Smart*Bob. Refer to the *Smart*Bob's manual on changing the bin address. The external start input is a dry contact closure e.g. a push button switch or PLC contacts. A good quality twisted pair wire is recommended. The 4-20mA output from the RSU provides a method to interface to a PLC or DCS. The maximum 4-20mA-loop resistance is **750 Ω (Ohms).** If this maximum resistance is exceeding the loop fault indicator will light. The 4-20mA output is not valid when loop fault is lit. Figure 1 on the following page illustrates how an RSU is connected to an SBR or SBRX remote unit. Figure 2 illustrated how an RSU is connected to an SBRII remote unit.

RSU Interconnect Wiring Diagram

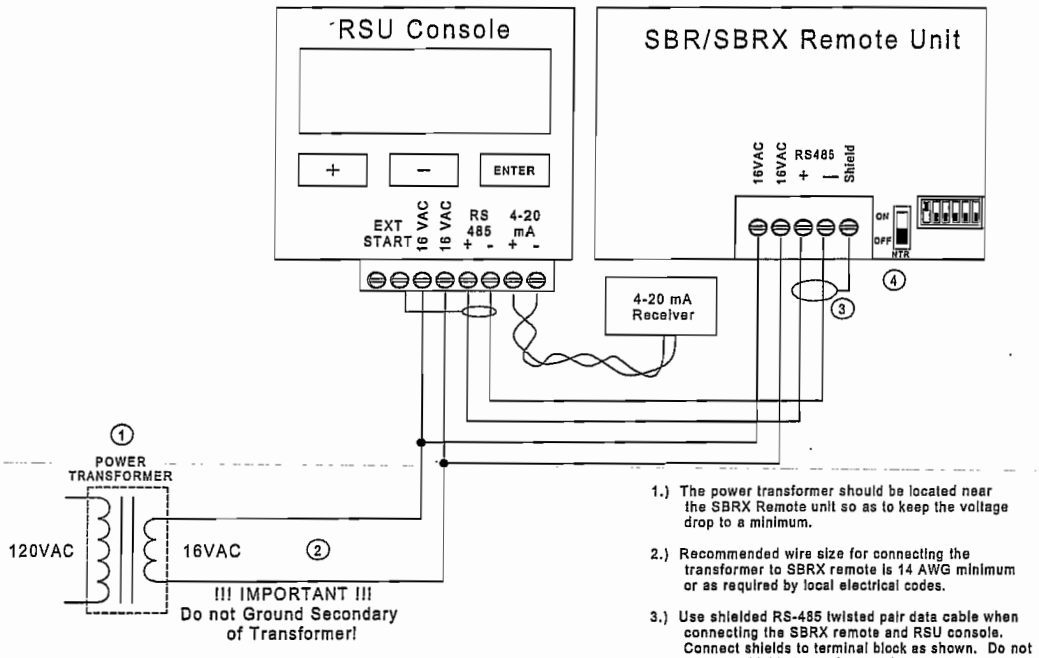

1.) The power transformer should be located near the SBRX Remote unit so as to keep the voltage drop to a minimum.

2.) Recommended wire size for connecting the transformer to SBRX remote is 14 AWG minimum or as required by local electrical codes.

3.) Use shielded RS-485 twisted pair data cable when connecting the SBRX remote and RSU console. Connect shields to terminal block as shown. Do not connect shields to earth ground.

4.) NTR (Network Termination) is in the "ON" position.

FIGURE 1

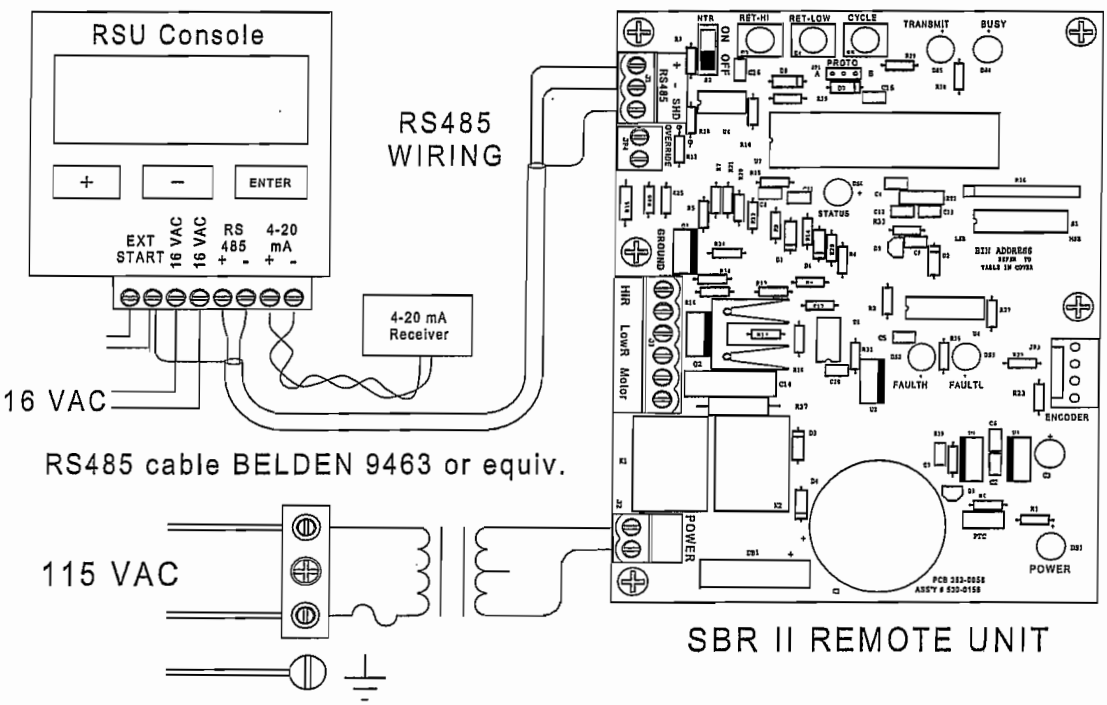

FIGURE 2

PROGRAMMING

The RSU has four programmable options, Bin Height (required), External Start Input, Internal Timer, and Units selection. A bin height must be programmed into the Remote Start Unit. This allows the RSU to correctly convert the *Smart*Bob's measurement into the 4-20mA output. The External Start Input menu has two options: momentary input and maintained input. The momentary input is edge triggered and will only take one measurement each time the PLC closes the dry contact. The maintained input is level triggered and will continue to take measurements as long as the contacts are closed. The factory default for the External Start Input is momentary. The RSU has a 24 hour Interval Timer that when enabled can be programmed to take repetitive measurements at timed intervals up to 24 hours apart. The RSU can display the measurements in either metric or English units. The default setting for measurements is feet. Also included in the RSU is test menu that can be used to calibrate the 4-20mA-loop receiver. The user can select a 4mA output or a 20mA output. **Once all programmable options have been set, the user must then select Display Mode from the Main Menu.** The RSU will then be ready to receive External Start Inputs, or start timed measurements and instruct the *Smart*Bob to execute measurements.

MENU SCREENS

Programming Menu Screens Flowchart is located in the back of this Manual and can be used as a guide through the Programming Screens. The following Menu Screen will appear at power up only if the Bin Height is set to 000.0

BINMASTER Smart Bob
Remote Start Unit
With 4-20mA Output
Press any Key

Upon pressing any key the screen will advance to the Main Menu. If a Bin Height had already been setup, the RSU would go to the DISPLAY MENU when powered up, ready to take a measurement.

Main Menu (+) Key = Setup Menu

Setup Menu (+) Key = Set Bin Height
Setup Menu (-) Key = Configuration Menu
Setup Menu (Enter) Key = Return to Main Menu

Setting Bin Height:

Pressing the "+" key at the MAIN MENU will display the SETUP MENU. Pressing the "+" at the SETUP MENU will display the BIN HEIGHT MENU. The range for the bin height is from 0.1 feet to 199.9 feet. Pressing the "+" key will increment the hundreds' decimal. Pressing the "-" key will decrement the hundreds' decimal. Pressing the "ENTER" key will accept the value for that decimal place and move the cursor to the next decimal place. Repeat the process of incrementing and/or decrementing until the correct bin height is entered. Once the tenth decimal place has been entered, a prompt will be displayed asking if the bin height is correct. Pressing the "+" key will accept the bin height and return to the SETUP MENU, pressing the "-" key will start the process of entering a bin height again.

Configuration Menu

Configuration Menu (+) Key = External Start Setup
Configuration Menu (-) Key = Units Menu
Configuration Menu (Enter) Key = Interval Timer Menu

Selecting External Start Input:

Pressing the "-" key at the SETUP MENU will display the EXTERNAL START MENU. Pressing the "+" key will select the **momentary** (edge triggered) input. Pressing the "-" will select **maintained** (level triggered) input. The momentary input will only execute one measurement for each time the input is closed. The maintained input will continue to execute repeated measurements until the input contacts are opened. Once an external start input is selected, pressing the "ENTER" key will return the SETUP MENU.

Units Menu

Pressing the "+" key at the Units Menu selects English units displayed in Feet. Pressing the "-" key at the Units Menu selects Metric units displayed in Meters. Pressing the "ENTER" key at the UNITS MENU will return to the SETUP MENU.

Interval Timer Menu

Interval Timer Menu (+) Key = Set Interval Timer
Interval Timer (-) Key = Enable Timer
Interval Timer(Enter) Key = Return to Setup Menu

Setting Interval Timer

Pressing the "+" key at the INTERVAL TIMER MENU allows you to set the repetitive time interval that the RSU will take a measurement. The interval can be set in increments of 1 minute up to a maximum of 24 hours. The time format is *hh: mm.* Use the +/- keys to increment / decrement the digits and the ENTER key to select the digit displayed and move to the next digit. After setting the hours and minutes, if the interval displayed is correct press the "+" key to accept and return to the Interval Timer Menu. The time interval set is the time from the one end of one measurement to the start of the next measurement.

ENABLE / DISABLE TIMER

Pressing the "-" key at the INTERVAL TIMER MENU is used to enable or disable the interval timer, depending on its current status. If the choice to select is ENABLE TIMER, then the timer is currently disabled and by pressing the enter key the timer well be enabled. This selection toggles to the other mode each time it is selected.

Main Menu (-) Key = Test Menu

Test Menu (+) Key = 20mA output
Test Menu (-) Key = 4mA output
Test Menu (Enter) Key = Return to Main Menu

Pressing the "-" key at the MAIN MENU will display the 4-20mA Test Menu. Pressing the "+" key will output 4mA on the current loop. The current loop can be forced to 20mA by pressing the "-" key. This test option can be used to calibrate the current loop receiver. This is an optional setup step. The RSU does not require any calibration to provide an extremely accurate (16 bit) 4-20mA output. However, this software feature can help in troubleshooting and in system setup.

Main Menu (Enter) Key = Display Mode

Display Mode:

Pressing the "ENTER" key from the MAIN MENU enters the Display Mode. When the Display Mode is selected, the RSU is ready to receive an External Start or if the INTERVAL TIMER is enabled, will take a measurement and then start timing down the interval to the next measurement. The Display Mode is the operational mode and the RSU will only accept External Start Inputs in this mode. A DISPLAY ERROR will occur if the user attempts to enter the Display Mode before setting the Bin Height or if the user selects a Bin Height of zero. The user can, at any time leave, the Display Mode and return to the MAIN MENU by pressing any key.

LOOP FAULT INDICATOR

On the RSU's front panel just below the keys, is an LED Loop Fault indicator. The LED will light if either of the following two conditions exist: (1) the 4-20mA loop is opened or (2) the loop resistance is greater than 750Ω. In either condition, a loop fault exists and the 4-20mA-output signal is invalid.

ERROR OUTPUT

The SmartBob remote measures both the distances to the product and the distance the Bob is retracted. If the difference between these distances is greater than six (6) inches, the RSU will display an error message indicating that the Bob is stuck. This error will also be reflected on the current loop output by supplying 20mA. Two error conditions can cause an output of 20mA: 1) the Bob did not fall at all, or 2) the Bob did not retract completely and the Bob is stuck. Both conditions are considered to require attention, therefore, the PLC can use this as a fault indication.

RSU MENU SCREENS FLOWCHART

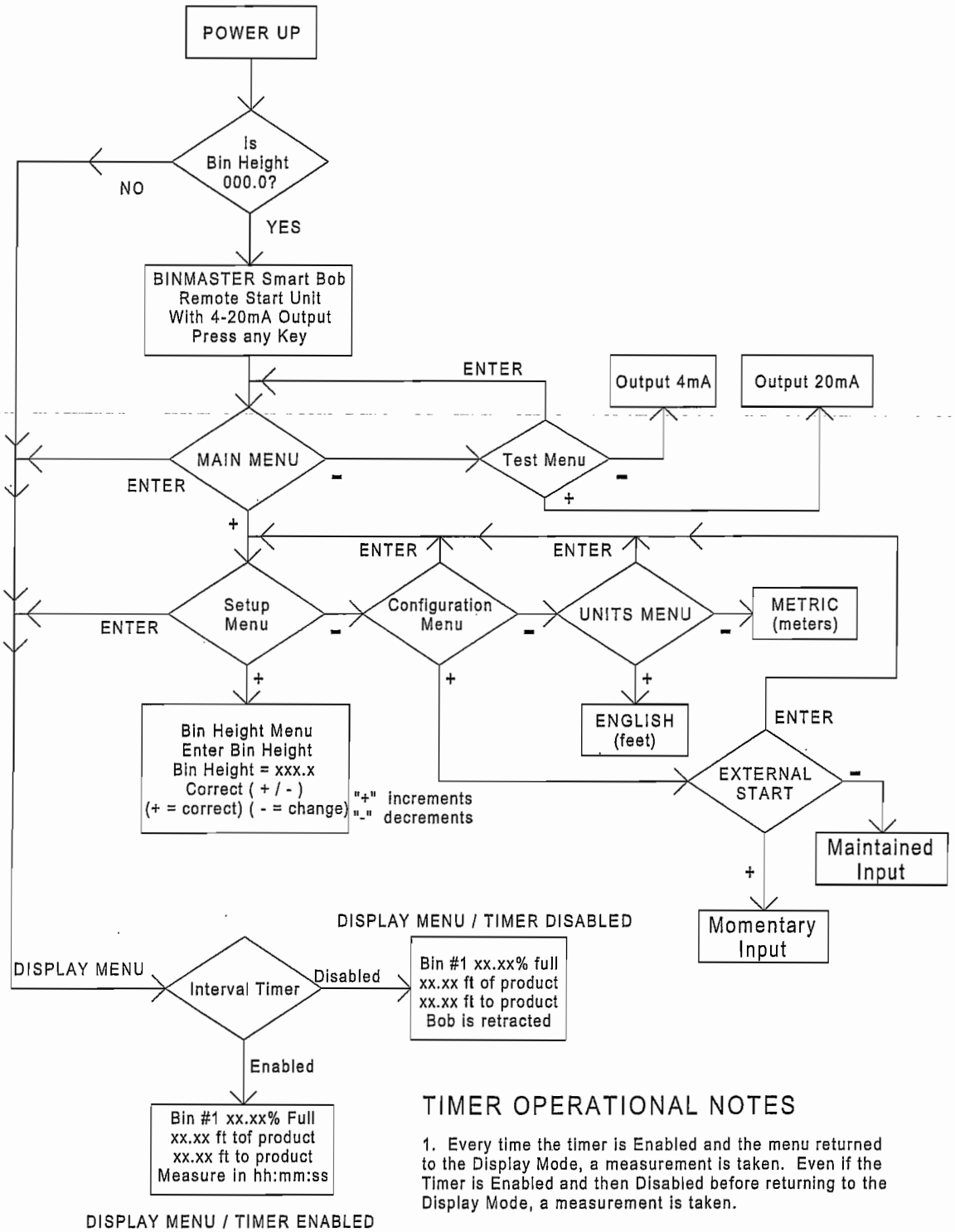

TIMER OPERATIONAL NOTES

1. Every time the timer is Enabled and the menu returned to the Display Mode, a measurement is taken. Even if the Timer is Enabled and then Disabled before returning to the Display Mode, a measurement is taken.

2. When the Timer is Disabled, the time remaining is retained in memory and when the timer is again Enabled, it begins counting down from this retained time.

BINMASTER

Taking Control . . .To A Higher Level

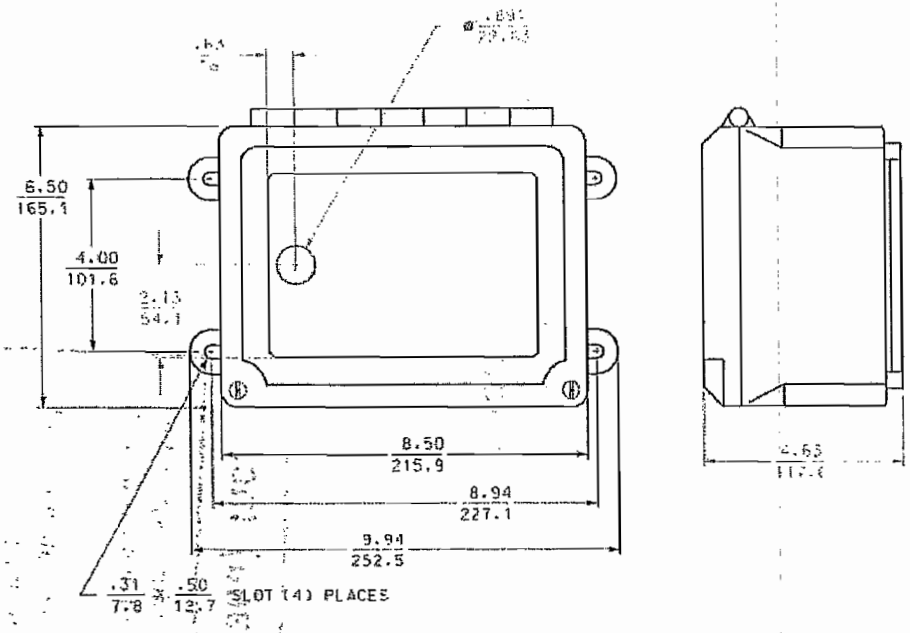

DRAWING NO.: 419-C076 TITLE: ENCLOSURE, RSU NEMA4X UNITS: IN/MM

Division of Garner Industries / 7201 North 98th St. / Lincoln NE 68507
(402) 434-5102 / Fax (402) 343-9133 / www.binmaster.com

Earth Tech (Canada) Inc.

Reviewed for general conformance with design intent. Responsibility for detailed design in the shop drawings rests with the Contractor.

Responsibility for verification and correlation of field dimensions, fabrication process, techniques of construction, installation and coordination of all parts of the work rests with the Contractor.

REVIEWED ✓

REVIEWED AS MODIFIED

REVISE AND RE-SUBMIT

NOT REVIEWED

Project No. C28/16/79538

Date: 11/9/06 By: M. Toulson

E&H BRINE LEVEL SWITCH

Level | Pressure | Flow | Temperature | Liquid Analysis | Registration | Systems Components | Services | Solutions

Technical Information

Liquiphant M FTL50(H), FTL51(H)

Vibration Limit Switch
Level limit switch for all liquids.
Suitable for use in hazardous areas, food and pharmaceuticals

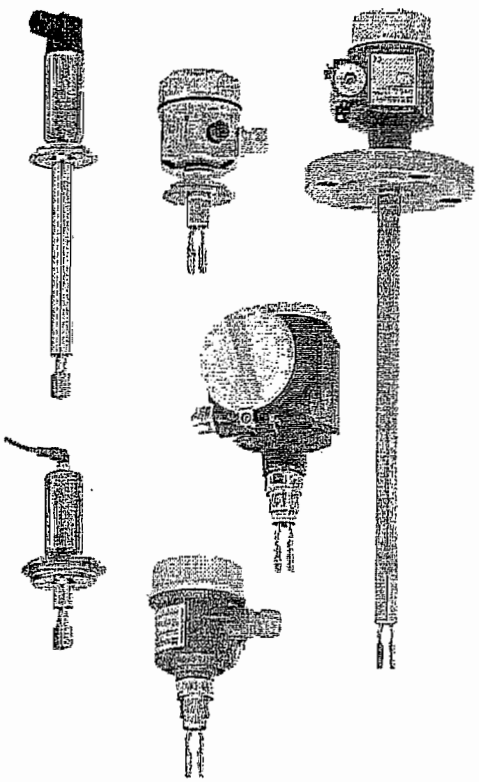

The function is not affected by flow, turbulence, bubbles, foam, vibration, bulk solids content or build-up. The Liquiphant is thus the ideal substitute for float switches.

FTL50:
Compact design, ideal for mounting in pipes and for installation in areas difficult to access

FTL51:
With extension pipe up to 3 m
(6 m on request)

FTL50H, FTL51H:
With polished tuning fork and easy-to-clean process connections and housings for food and pharmaceutical applications.

High corrosion-resistant AlloyC4 (2.4610) is available for the fork and process connections for applications in very aggressive liquids.

EEx ia, EEx de and EEx d protection enable it to be used in hazardous areas.

Your benefits

- Use in safety systems requiring functional safety to SIL2/SIL3 in accordance with IEC 61508/ IEC 61511-1
- Large number of process connections to choose from: universal usage
- Wide variety of electronics, e.g. NAMUR, relay, thyristor, PFM signal output: the right connection for every process control system
- PROFIBUS PA protocol: for commissioning and maintenance
- No calibration: quick, low-cost start-up
- No mechanically moving parts: no maintenance, no wear, long operating life
- Monitoring of fork for damage: guaranteed function
- FDA approved materials (PFA Edlon)

Application
The Liquiphant M is a level limit switch for use in all liquids
- for process temperatures of –50 °C to 150 °C
- for pressures up to 100 bar
- for viscosity up to 10000 mm^2/s
- for densities 0.5 g/cm^3 or 0.7 g/cm^3 other settings available on request
- foam detection on request

THIS SWITCH IS IDENTIFIED AS BRINE HIGH LOW SWITCH, BUT IT IS SHOWN ON BRINE TANK DWG APPROX 450MM FROM BOTTOM OF TANK AND CONFIRMED IN SALT?

Endress+Hauser
People for Process Automation

Application

Level limit detection

Maximum or minimum detection in tanks or pipes containing all kinds of liquids, including use in hazardous areas, food and pharmaceuticals

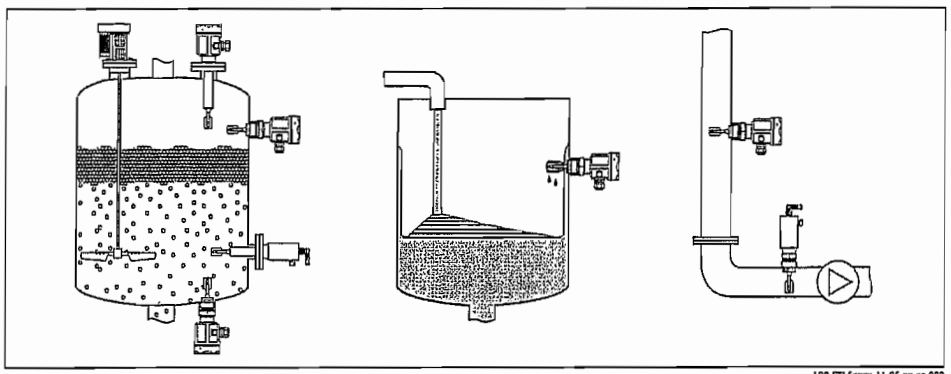

L00-FTL5xxxx-11-05-xx-xx-000

Function and system design

Measuring principle

The sensor's fork vibrates at its intrinsic frequency.
This frequency is reduced when covered with liquid. The change in frequency then activates a limit switch.

Modularity

Level limit switch
Liquiphant M FTL with electronic versions
FEL51, FEL52, FEL54

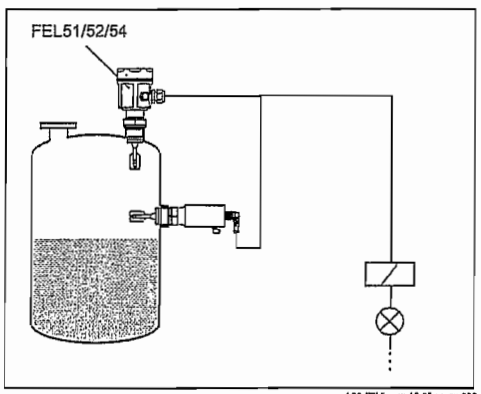

L00-FTL5xxxx-15-05-xx-xx-000

Level sensor
Liquiphant M FTL with electronic versions
FEL55, FEL56, FEL57, FEL58
for connecting to a separate switching unit or
or an isolating amplifier FEL50A
for connecting to PROFIBUS PA segment

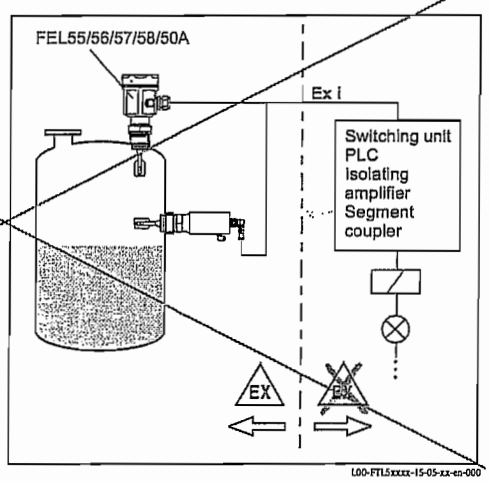

L00-FTL5xxxx-15-05-xx-en-000

Electronic versions for level limit switches	~~FEL51:~~ ~~Two-wire AC version;~~ ~~Switch the load directly into the power supply circuit via the thyristor.~~ ~~FEL52:~~ ~~Three-wire DC version;~~ ~~Switch the load via the transistor (PNP) and separate connection.~~ FEL54: Universal current version with relay output; Switch the loads via 2 floating change-over contacts.
~~**Electronic versions for level sensor**~~	~~FEL55:~~ ~~For separate switching unit; signal transmission 16/8 mA along two-wire cabling.~~ ~~FEL56:~~ ~~For separate switching unit; signal transmission L-H edge 0.6...1.0 / 2.2...2.8 mA to EN 50227 (NAMUR) along two-wire cabling.~~ ~~FEL58:~~ ~~For separate switching unit; signal transmission H-L edge 2.2...3.5 / 0.6...1.0 mA to EN 50227 (NAMUR) along two-wire cabling.~~ ~~Checking of connecting cabling and other devices by pressing a key on the electronic insert.~~ ~~FEL57:~~ ~~For separate switching unit; PFM signal transmission;~~ ~~Current pulses superposed on the power supply along the two-wire cabling.~~ ~~Cyclical checking from the switching unit without changing levels.~~ ~~FEL50A:~~ ~~For connecting to PROFIBUS PA;~~ ~~Cyclic and acyclic data exchange acc. to PROFIBUS PA Profile 3.0 Discrete Input~~
Galvanic isolation	~~FEL51, FEL52, FEL50A:~~ ~~Between sensor and power supply~~ FEL54: Between sensor and power supply and load ~~FEL55, FEL56, FEL57, FEL58:~~ ~~See Switching unit connected~~
Design	~~FTL50:~~ ~~Compact~~ ~~FTL51:~~ ~~With extension pipe~~ FTL50H: Compact, with polished tuning fork and hygienic process connections ~~FTL51H:~~ ~~With extension pipe, polished tuning fork and hygienic process connections~~

Input

Measured variable	Level (limit value)
Measuring range (detection range)	FTL50: Depends on mounting point. ~~FTL51:~~ ~~Depends on mounting point and the pipe extension. Standard 3000 mmm (up to 6000 mm on request)~~
Product density	Adjustment on the electronic insert > 0.5 g/cm³ or > 0.7 g/cm³ (other on request)

Electronic insert FEL54 (AC/DC with relay output)

Power supply

Supply voltage: 19...253 V AC, 50/60 Hz or 19...55 V DC
Power consumption: max. 1.3 W
Reverse polarity protection
Overvoltage protection FEL54: overvoltage category III

Electrical connection

Universal current connection with relay output

Power supply:
Please note the different voltage ranges for AC and DC.

Output:
When connecting an instrument with high inductance, provide a spark arrester to protect the relay contact.
A fine-wire fuse (depending on the load connected) protects the relay contact on short-circuiting.
Both relay contacts switch simultaneously.

* When jumpered, the relay output works with NPN logic.

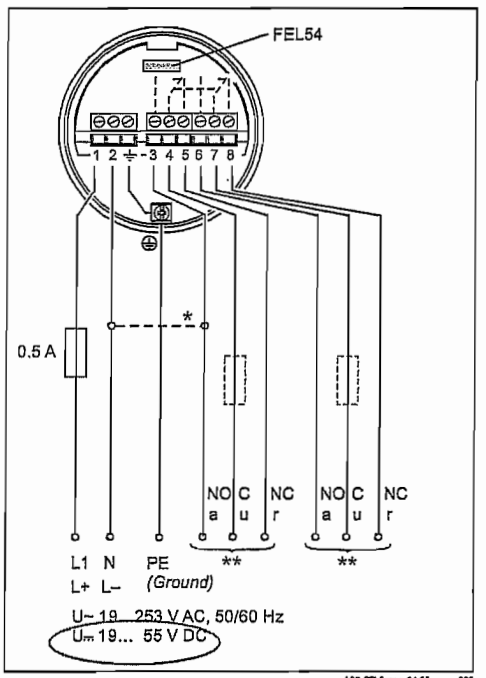

L00-FTL5xxxx-04-05-xx-xx-002

Output signal

= relay energised

= relay de-energised

= lit

= unlit

L00-FTL2xxxx-07-05-xx-xx-001

Safety mode	Level	Output signal	LEDs green	LEDs red
Max.		3 4 5 / 6 7 8	☼	●
		3 4 5 / 6 7 8	☼	☼
Min.		3 4 5 / 6 7 8	☼	●
		3 4 5 / 6 7 8	☼	☼

L00-FTL5xxxx-04-05-xx-xx-003

Signal on alarm

Output signal on power failure or in the event of damaged sensor: relay de-energised

Connectable load

- Loads switched via 2 floating change-over contacts (DPDT)
- I~ max. 6 A (EEx d 4 A), U~ max. 253 V AC; P~ max. 1500 VA, cos φ = 1, P~ max. 750 VA, cos φ > 0.7
- I⎓ max. 6 A (EEx d 4 A) to 30 V, I⎓ max. 0.2 A to 125 V
- When connecting a low-voltage circuit with double isolation according to IEC 1010 the following applies: total of voltages of relay output and power supply max. 300 V

Connection and function

Connecting cables	▪ Electronic inserts: cross-section max. 2.5 mm^2; strand in ferrule to DIN 46228 ▪ Protective earth in housing: cross-section max. 2.5 mm^2 ▪ External equipotential bonding connection on housing: cross-section max. 4 mm^2
Fail-safe mode	Minimum/maximum residual current safety selectable on electronic insert (with FEL57 on Nivotester only) Max. = maximum safety: The output switches to the power fail response when the fork is covered For use with overfill protection for example Max. = minimum safety: The output switches to the power fail response when the fork is exposed For use with dry running protection for example
Switching time	When fork is covered: approx. 0.5 s When fork is exposed: approx. 1.0 s Other switching times on request Additionally configurable for PROFIBUS PA: 0.5...60 s
Switch-on behaviour	When switching on the power supply, the output assumes the alarm signal. After max. 3 s it assumes the correct switching mode (Exception: FEL57)

Performance characteristics

Reference operating conditions	Ambient temperature: 23 °C Medium temperature: 23 °C Product density: 1 g/cm^3 (water) Viscosity: 1 mm^2/s Medium pressure p_e: 0 bar Sensor mounting: vertical from above Density switch: to > 0.7

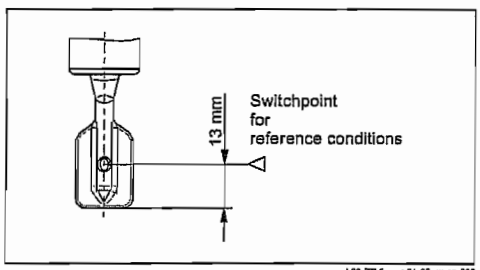

L00-FTL5xxxx-06-05-xx-en-000

Maximum measured error	Specified by mounting position: max. +/−1 mm
Repeatability	0.1 mm
Hysteresis	Approx. 2 mm
Influence of medium temperature	Max. +1.8...−2.8 mm (−50...+150 °C)
Influence of product density	Max. +4.8...−3.5 mm (0.5...1.5 g/cm^3)
Influence of medium pressure	Max. 0...−2.5 mm (−1...64 bar)

Operating conditions

Installation

Installation instructions

Switch points ▷ on the sensor depend on the mounting position, with reference to water, density 1 g/cm³, 23 °C, p_e 0 bar.

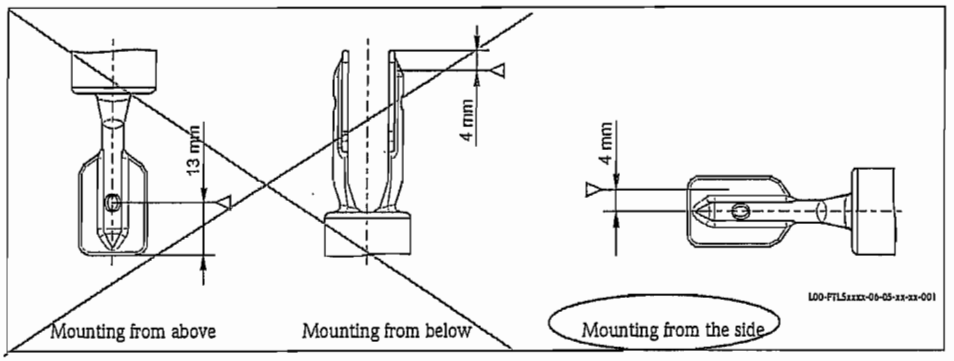

Note!
The switchpoints of the Liquiphant M are at other positions to those of the previous version Liquiphant II.

Examples of mounting

Examples of mounting with regard to the viscosity ν of the liquid and the amount of build-up

Optimum mounting, without problem even with high viscosity:

Position the fork so that the narrow edge of the tines is vertical.
This ensures that the liquid can run off easily.

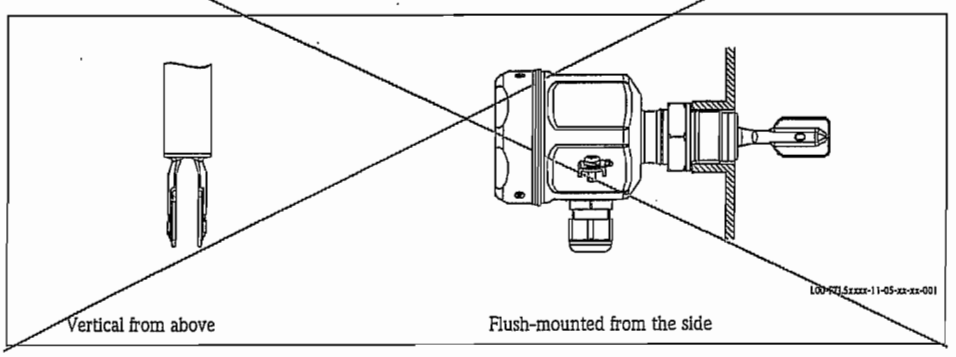

With build-up on the tank walls:

* Ensure that there is sufficient distance between the build-up expected on the tank wall and the fork.

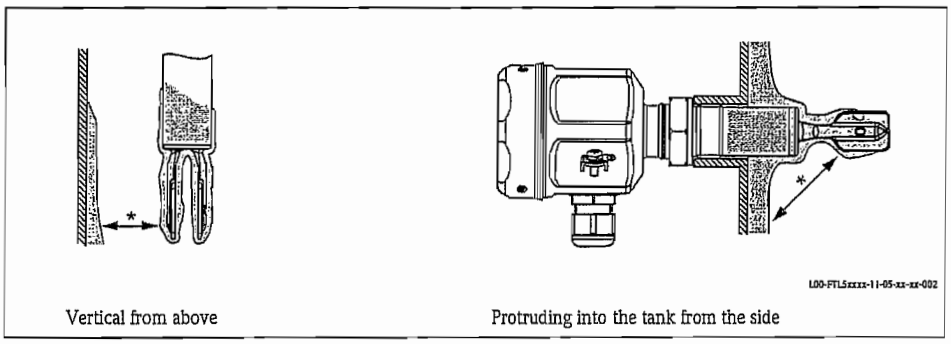

Mounting positions with low viscosity (up to 2000 mm²/s):

* Deburr the nozzle surfaces

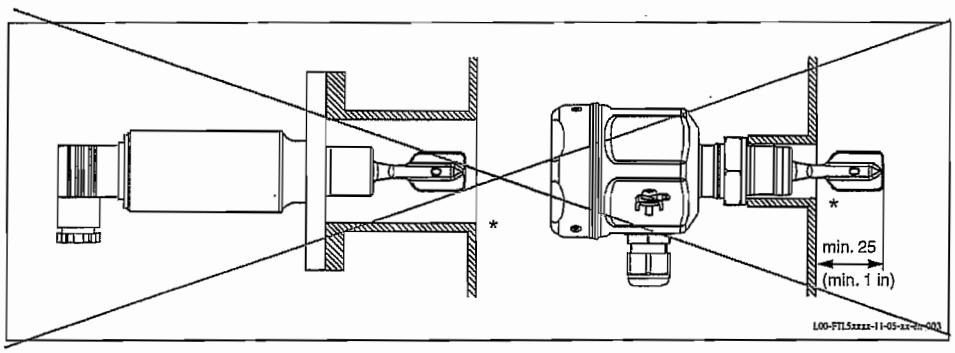

Mounting in piping from 2"

Fluid velocities up to 5 m/s for viscosity 1 mm²/s and density 1 g/cm³.
(Check the function for other operating conditions.)

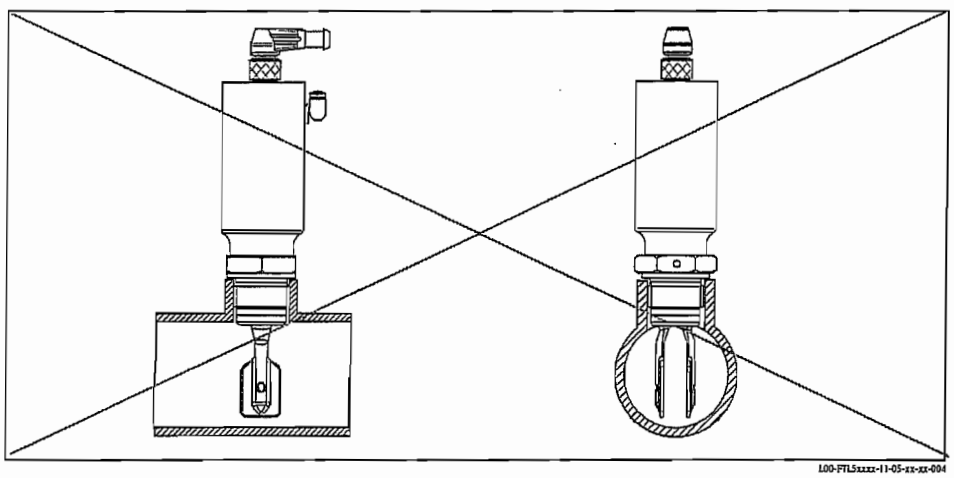

Support the Liquiphant M FTL51(H) in the event of high dynamic loads.

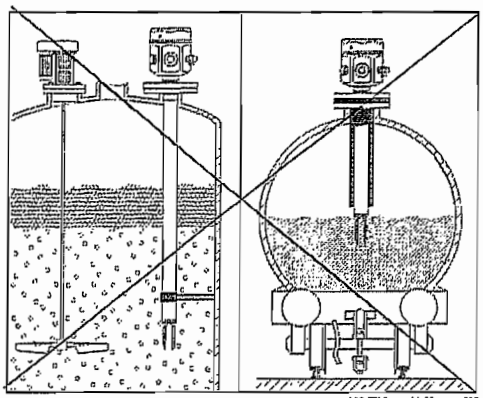

L00-FTL5xxxx-11-05-xx-xx-005

Ensure adequate space outside the tank for mounting, electrical connection and configuration.

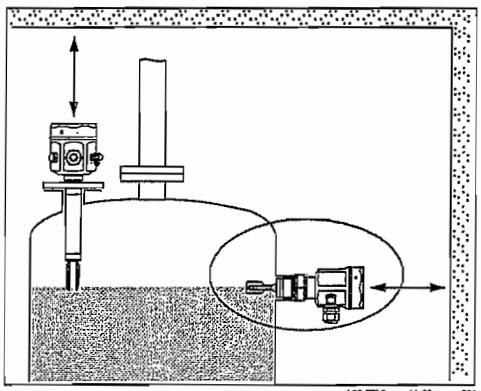

L00-FTL5xxxx-11-05-xx-xx-006

Orientation

FTL50(H) and FTL51(H) with short pipe (up to approx. 500 mm) – any position,
FTL51(H) with long pipe – vertical

Environment

Ambient temperature range

Permitted ambient temperature T_a at the housing depending on the medium temperature T_p in the tank:

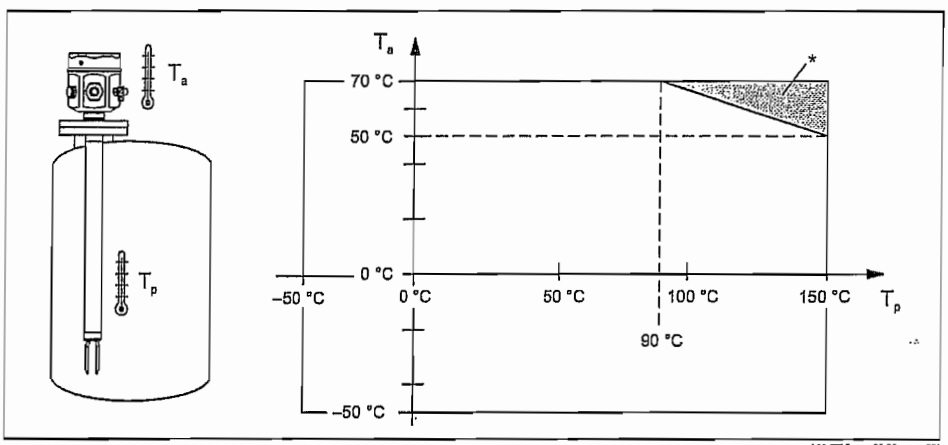

L00-FTL5xxxx-05-05-xx-xx-001

* Additional temperature range for devices with a temperature spacer or flameproof bushing

Ambient temperature limits

–50...+70 °C (function with restricted data)

Storage temperature	–50...+80 °C
Climate class	Climate protection to IEC 68, Part 2-38, Fig. 2a
Degree of protection	▪ Polyester, steel and aluminium housings: IP66/IP67 to EN 60529 ▪ Aluminium housing (EEx d, EEx de): IP66/IP68 to EN 60529 (1 m, 24 h) ▪ Compact housing: – IP65 with valve connector Pg11/NPT ½ – IP66/68 with 5m cable tail – IP66/68 with M12x1 connector (52010285) 316L (metal); – IP69k with connector (52024216), elbowed / L= 5 m, without build-in LEDs – IP69k with connector (52018763), elbowed / L= 5 m, with build-in LEDs
Vibration resistance	To IEC 68, Part 2-6 (10...55 Hz, 0.15 mm, 100 cycles)
Electromagnetic compatibility	Interference emission to EN 61326, Electrical Equipment Class B Interference immunity to EN 61326; Annex A (Industrial) and NAMUR Recommendation NE 21 (EMC) If the fork tines are joined together on account of build-up, the useful signal is attenuated to such an extent that the original EMC values can no longer be completely observed. (EN 61000-4-3 Electromagnetic fields, EN 61000-4-6 HF coupling)

Medium conditions

Medium temperature range	–50...+150 °C; for exceptions, see "Process connections"
Thermal shock	Max. 120 °C/s
Medium pressure p_e	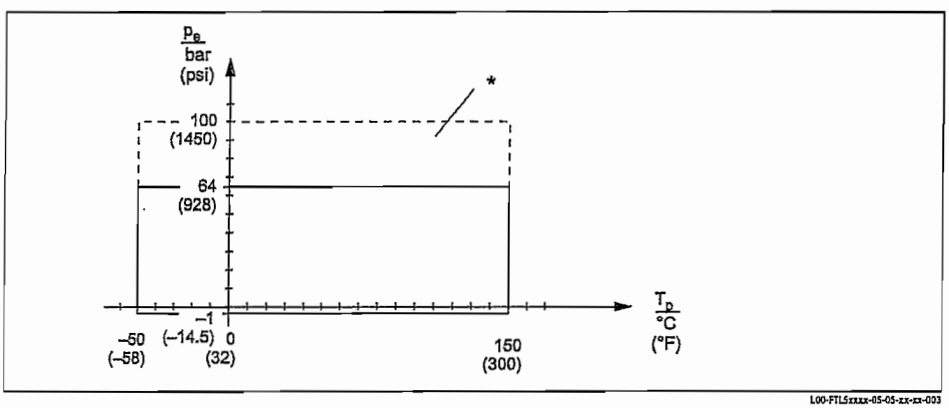 * Allowed pressure rating by selecting the "100 bar" option (see "Product structure" code 060) Exceptions see "Process connections"
Test pressure	p_e = 64 bar: max. 100 bar (1.5 times the medium pressure p_e); no function during test pressure Burst pressure of diaphragm 200 bar p_e = 100 bar: max. 150 bar (1.5 times the medium pressure p_e); no function during test pressure Burst pressure of diaphragm 400 bar
State of aggregation	Liquid

Density	0.7 g/cm^3 = delivery status 0.5 g/cm^3* adjustable over switches * Density settings for the compact housing on request
Viscosity	Max. 10000 mm^2/s
Solids content	Max. ø5 mm

Mechanical construction

Design

Summary of all electrical and mechanical versions

Plug-in electronic inserts to mount in the housing

L00-FTL5xxxx-03-05-xx-xx-000

FEL51*:	Two-wire AC connection
FEL52*:	Three-wire DC connection PNP
FEL54:	Universal current connection, 2 relay outputs
FEL55:	Output 16/8 mA for separate switching unit
FEL56:	Output 0.6...1.0 / 2.2...2.8 mA for separate switching unit (NAMUR)
FEL58*:	Output 2.2...3.5 / 0.6...1.0 mA for separate switching unit (NAMUR)
FEL57:	Output 150/50 Hz, PFM, for separate switching unit (Nivotester)
FEL50A:	Digital communication PROFIBUS PA

* Electronics also available as compact housing. The electronics cannot be exchanged!

Housing

L00-FTL5xxxx-03-05-xx-xx-019

Pipe housing
Compact (316L)

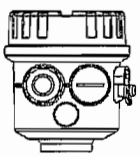

L00-FTL5xxxx-03-05-xx-xx-001

F16
Polyester (PBT)

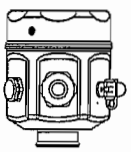

L00-FTL5xxxx-03-05-xx-xx-002

F15
Steel (316L)

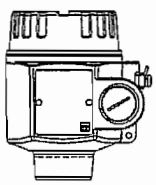

L00-FTL5xxxx-03-05-xx-xx-003

F17/F13
Aluminium
(also for EEx d),
coated

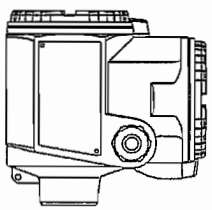

L00-FTL5xxxx-03-05-xx-xx-004

T13
Aluminium with separate
connection compartment
(also for EEx de and
EEx d), coated

Process connections

L00-FTL5xxxx-03-05-xx-xx-006

G ¾, DIN ISO 228/I
R ¾, DIN 2999
NPT ¾, ANSI B 1.20.1
(AF 32)

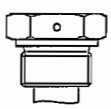

L00-FTL5xxxx-03-05-xx-xx-007

G 1, DIN ISO 228/I
R 1, DIN 2999
NPT 1, ANSI B 1.20.1
(AF 41)

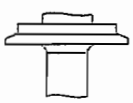

L00-FTL5xxxx-03-05-xx-xx-008

Diverse
hygienic and aseptic
connections

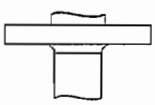

L00-FTL5xxxx-03-05-xx-xx-009

Flanges to DIN, ANSI, JIS
from DN 25 / 1"

Sensors
Compact,
with extension pipe up to 3 m (to 6 m on request)
or special length "L II" (see also page 30)

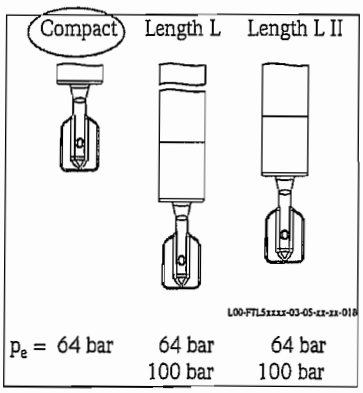

Bushings
Temperature spacer and flameproof bushing

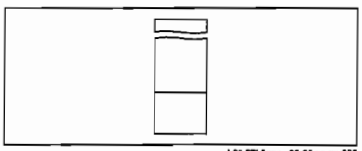

Dimensions
(in mm; 1 mm = 3.94 in)

Housing and sensor FTL50(H)

Compact housing

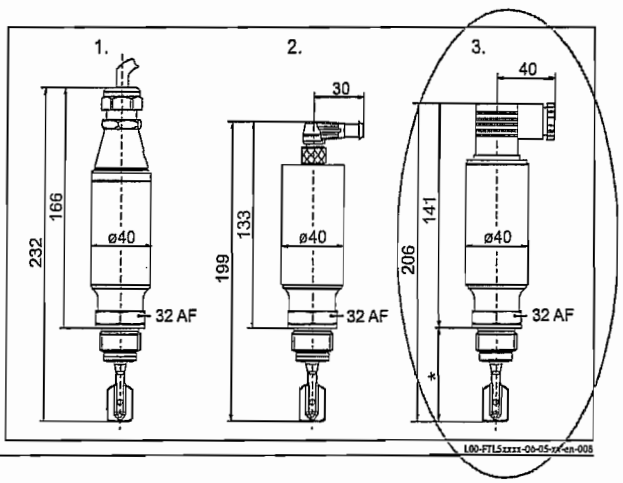

1. 5 m cable
2. M12 connector
3. PgT1/NPT ½ connector

Polyester housing

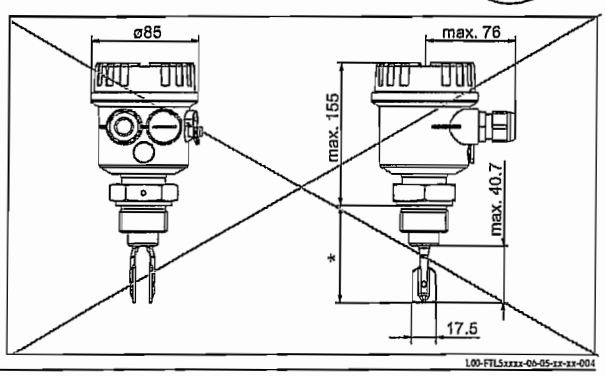

Steel housing

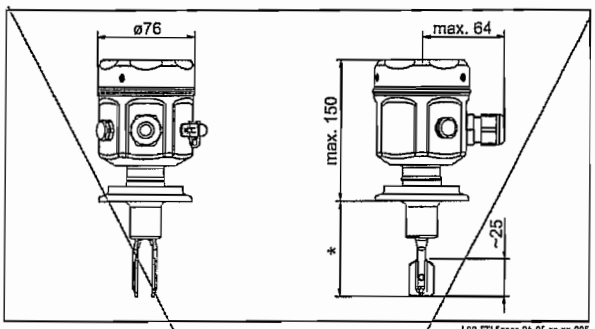

Aluminium housing

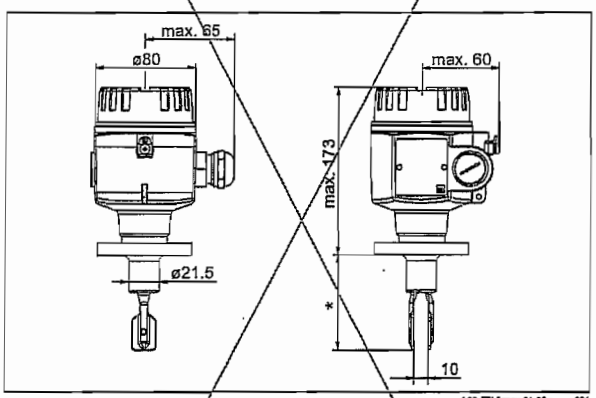

Aluminium housing
with separate
connection compartment

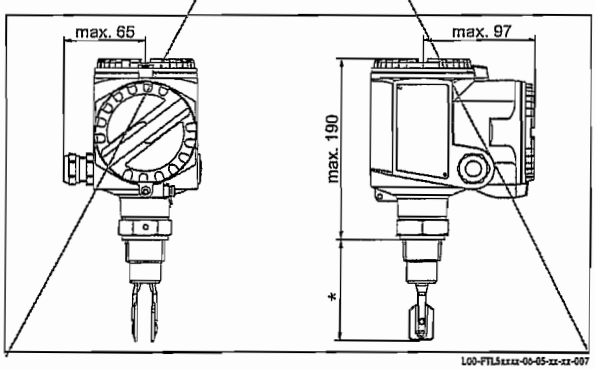

* see "Process connections"

Note!
The switchpoints of the Liquiphant **M** are at other positions to those of the previous version Liquiphant **II**.

Bushings: temperature spacer, flameproof bushing

Temperature spacer
Provides sealed insulation
for the vessel and normal ambient
temperatures for the housing.

Flameproof bushing
Protects the housing from pressures
up to 100 bar if the sensor is damaged.
Provides sealed insulation
for the vessel and normal ambient
temperatures for the housing.

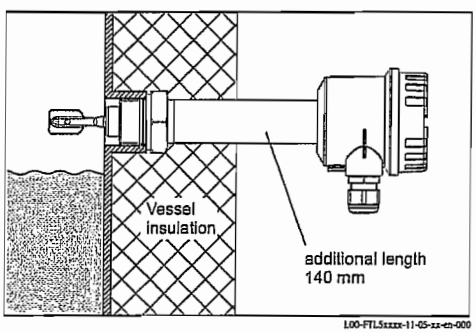

Process connections for FTL50(H) and FTL51(H)

Process connection		Dimensions	Accessories	Pressure Temperature
G ¾ DIN ISO 228/1 with defined thread start With elastomer flat seal to DIN 7603: supplied	GQ2 GQ5	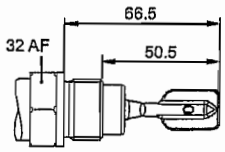		max. 100 bar max. 150 °C
G ¾ DIN ISO 228/1 with defined thread start For flush-mounted installation in welding neck	GQ2 GQ5	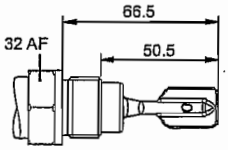	**Welding neck** (with defined thread start) with silicone O-ring Endress+Hauser 52001052 In conformity with FDA* See "Accessories"	max. 25 bar max. 150 °C max. 40 bar max. 100 °C
G 1 DIN ISO 228/1 With elastomer flat seal to DIN 7603: supplied	GR2 GR5	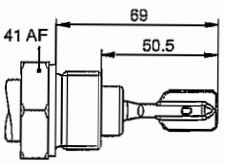		max. 100 bar max. 150 °C
G 1 DIN ISO 228/1 with defined thread start With seal surface for flush-mounted installation in welding neck	GW2	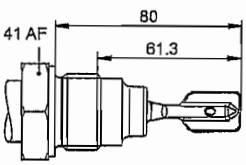	**Welding neck** (with defined thread start) with silicone O-ring Endress+Hauser 52001051 In conformity with FDA* See "Accessories"	max. 25 bar max. 150 °C max. 40 bar max. 100 °C
NPT ¾ ANSI B 1.20.1 or R ¾ DIN 2999	GM2 GM5 GE2 GE5	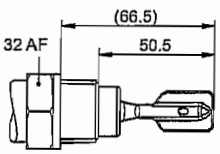	In conformity with FDA*	max. 100 bar max. 150 °C
NPT 1 ANSI B 1.20.1 or R 1 DIN 2999	GN2 GN5 GF2 GF5	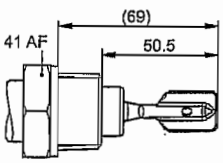	In conformity with FDA*	max. 100 bar max. 150 °C
Flanges ANSI B 16.5 EN 1092-1 (DIN 2527 B) JIS B2220	A## B## C## F## N## K##	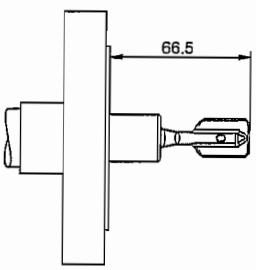	Seal according to design installed on site In conformity with FDA*	See nominal pressure of flange, however max. 100 bar max. 150 °C

* FDA approved materials according to 21 CFR Part 177.1550/2600

Sensor length L for FTL51 and FTL51H,
depending on process connection

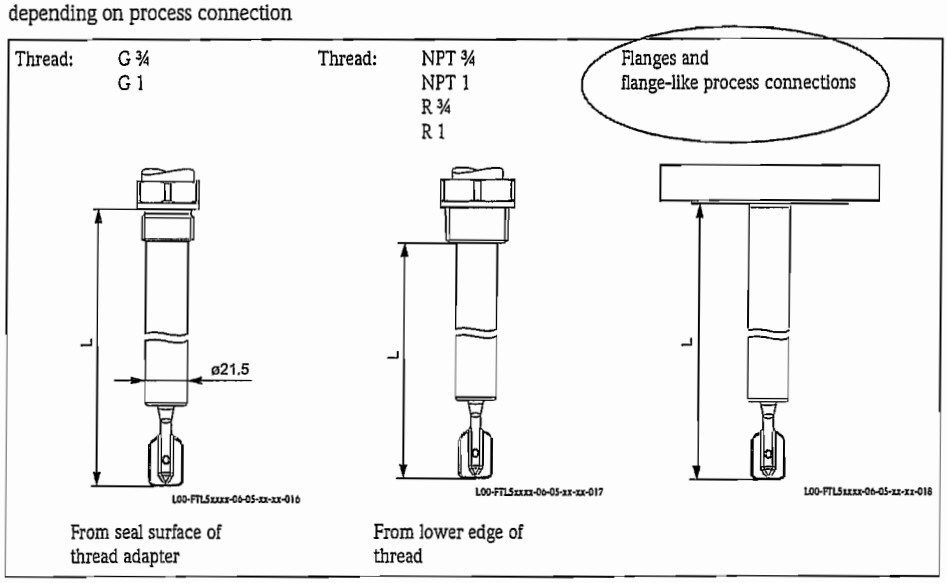

Any length L:
148...3000 mm (6...115 in); special version (TSP) on request up to 6000 mm (235 in)

Note!
The switchpoints of the Liquiphant M are at other positions to those of the previous version Liquiphant II.

Special length "L II":
With vertical mounting from above the same switchpoint as for the Liquiphant II
FTL360, FTL365, FDL30, FDL35

"L II" depends on process connection:
115 mm for flanges and flange-like process connections
99 mm for threads NPT and R (BSPT)
118 mm for threads G 1 (BSP 1)
115 mm for threads G ¾ (BSP ¾)
104 mm for flush-mounted 1" (Endress+Hauser)

Weights

See "Product structure"

Material

- Wetted parts:
  Process connection and extension pipe: AISI 316L (1.4435) or 2.4610 (AlloyC4)
  Tuning fork: AISI 316L (1.4435) or 2.4610 (AlloyC4)
- Flat seal for process connection G ¾ or G 1: elastomer fibre, asbestos-free
- Polyester housing: PBT-FR
  with PBT-FR cover or with PA12 cover with sight glass,
  Cover seal: EPDM
- Steel housing: AISI 316L,
  Cover seal: silicone
- Aluminium housing: EN-AC-AlSi10Mg, plastic-coated,
  Cover seal: EPDM
- Compact housing: valve connector or M12 connector
- Cable gland: polyamide or brass, nickel-plated
- Temperature spacer: AISI 316L (1.4435)
- Flameproof bushing: AISI 316L (1.4435)

Process connections

- Parallel thread G ¾, G 1 to DIN ISO 228/I with flat seal to DIN 7603
- Tapered thread R ¾, R 1 to DIN 2999 Part 1
- Tapered thread ¾ -14 NPT, 1 - 11½ NPT to ANSI B 1.20.1
- Flush-mounted with welding neck to factory standard Endress+Hauser (G ¾, G 1)
- Flush-mounted with welding neck to factory standard Endress+Hauser (1"), Sensor can be positioned
- Tri-Clamp 1½", 2" to ISO 2852
- Threaded pipe joint DN 32, 40, 50 to DIN 11851
- Aseptic connection DN 50 to DIN 11864-1 Form A for pipe DIN 11850
- SMS connection 2" (DN 51)
- DRD flange
- Varivent® DN 50 (50/40) to factory standard Tuchenhagen
- Flanges to EN/DIN from DN 25, for standards see "Product structure", to ANSI B 16.5 from 1", to JIS B2220 (RF)

Human interface

Electronic inserts

With FEL51, FEL52, FEL54, FEL55:

- 2 switches for safety mode and density change,
- green LED to indicate operational status,
- red LED to indicate the switching status, flashes in the event of corrosion damage on sensoror if the electronics are defect

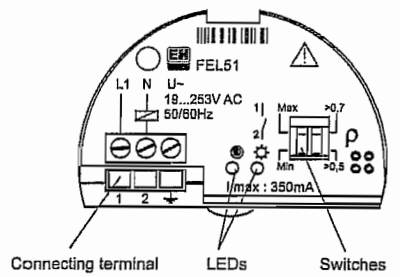

L00-FTL5xxxx-03-05-xx-en-001

With FEL56:

- 2 switches for safety mode and density change,
- green LED flashes to indicate operational status,
- red LED to indicate the switching status, flashes in the event of corrosion damage on sensor or if the electronics are defect

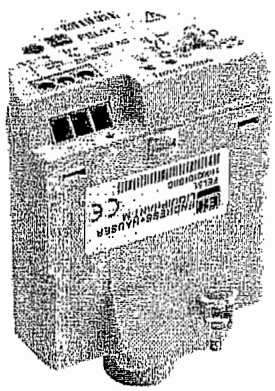

L00-FTL5xxxx-03-05-xx-xx-013

With FEL57:

- 2 switches for density change and cyclical checking,
- green LED to indicate operational status,
- yellow LED to indicate the covered status, flashes in the event of corrosion damage on sensor or if the electronics are defect

With FEL58:

- 2 switches for safety mode and density change,
- green LED
  - flashes quickly to indicate operational status,
  - flashes slowly to indicate corrosion damage at the sensor or if the electronics are defect,
- yellow LED to indicate the switching status, Test key – breaks the cable connection

With FEL50A:

- 8 switches for configuring the device address,
- green LED to indicate operational status, pulsing to indicate communication;
- yellow LED to indicate the switching status, flashes in the event of corrosion damage on sensor or if the electronics are defect

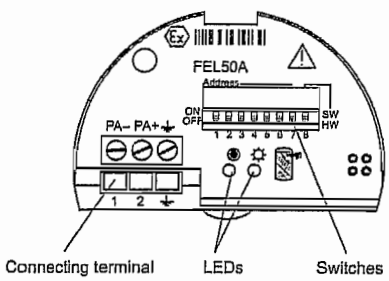

L00-FTL5xxxx-03-05-xx-en-002

Compact housings

Function test with test magnet

Versions AC, DC-PNP and NAMUR:

During the test, the current state of the electronic switch is reversed.

Performing the test

Hold the test magnet against the marking on the nameplate:

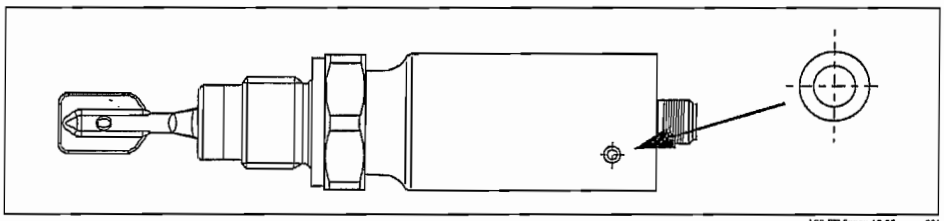

L00-FTL5xxxx-19-05-xx-xx-001

The switching status is changed.

Light signals

Versions AC and DC-PNP with valve connector or cable tail

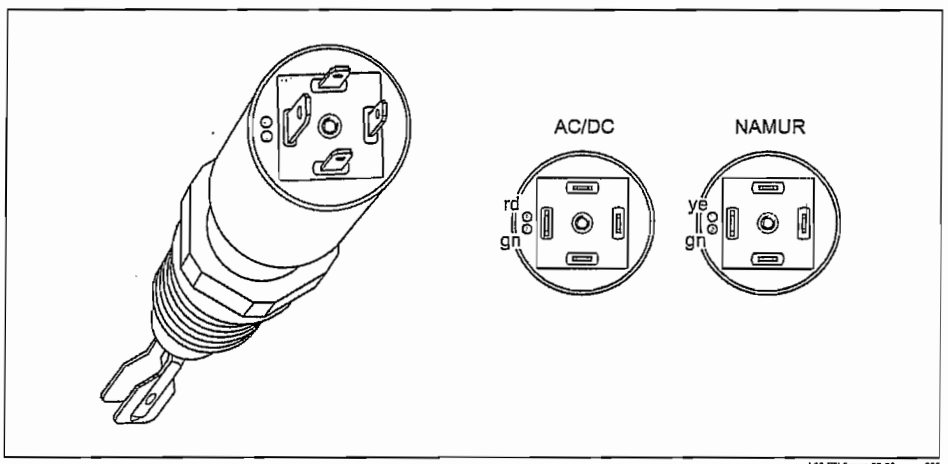

L00-FTL5xxxx-07-05-xx-xx-005

Green light (gn) light up (AC/DC):

Liquiphant M is connected to the power supply and is operational.

Green light (gn) flashing (NAMUR):

Liquiphant M is connected to the power supply and is operational.

Red light (rd) lights up (AC/DC):

MAX application mode (overfill protection): sensor is immersed in liquid.
MIN application mode (dry running protection): sensor is not immersed in liquid.

Yellow light (ye) lights up (NAMUR):

MAX application mode (overfill protection): sensor is not immersed in liquid.
MIN application mode (dry running protection): sensor is immersed in liquid.

Red light (rd) flashing (AC/DC):

Liquiphant M has detected a fault.

Version NAMUR and DC-PNP with M12x1 round connector 316L

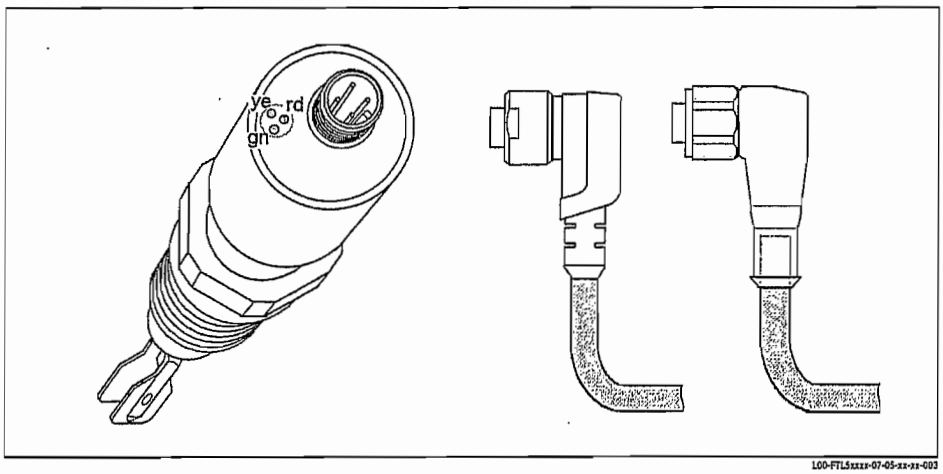

L00-FTL5xxxx-07-05-xx-xx-003

Green light (gn) lights up (DC-PNP):

Liquiphant M is connected to the power supply and is operational.

Green light (gn) flashing with 1 Hz (NAMUR):

Liquiphant M is connected to the power supply and is operational.

Yellow light (ye) lights up (DC-PNP):

Sensor is immersed in liquid.

Yellow light (ye) lights up (NAMUR):

MAX application mode (overfill protection): sensor is not immersed in liquid.
MIN application mode (dry running protection): sensor is immersed in liquid.

Red light (rd) flashing (DC-PNP):

Liquiphant M has detected a fault.

Green light (gn) flashing with 0.3 Hz (NAMUR):

Liquiphant M has detected a fault.

Version DC-PNP with M12x1 round connector 316L

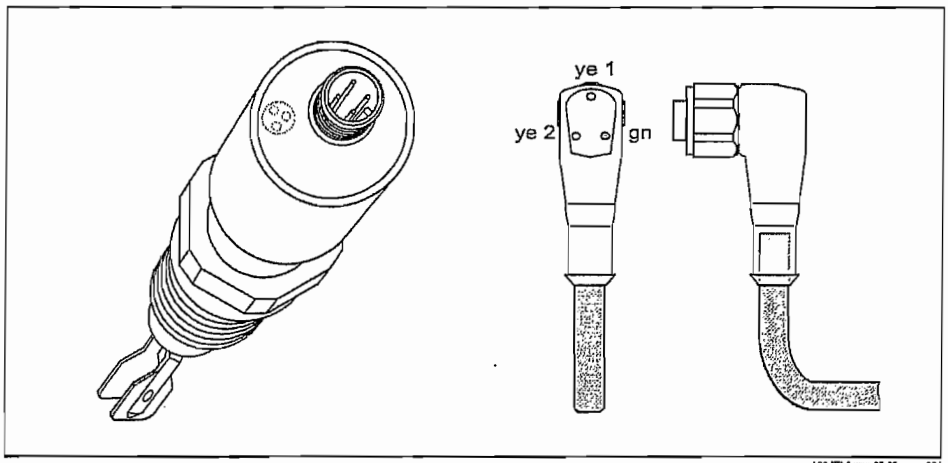

L00-FTL5xxxx-07-05-xx-xx-004

Green light (gn) lights up:

Liquiphant M is connected to the power supply and is operational.

Yellow light (ye 1) lights up:

MAX application mode (overfill protection): sensor is not immersed in liquid.
MIN application mode (dry running protection): sensor is not immersed in liquid.

Yellow light (ye 2) lights up:

MAX application mode (overfill protection): sensor is immersed in liquid.
MIN application mode (dry running protection): sensor is immersed in liquid.

Green light (gn) lights up, both yellow lights (ye 1+2) do not light up:

Liquiphant M has detected a fault.

Operating concept

Onsite configuration

Certificates and approvals

General approvals

For Liquiphant M FTL50H, FTL51H the following approvals are available:

- EHEDG: Certification (from TNO, The Netherlands), Report No. V99.394
- 3A: 3A Certificate (USA), Authorization No. 459

Process connections	Order Code	EHEDG + 3A® L00-FTL5xxxx-01-05-xx-xx-001
Flush-mounted G ¾, G1 (with welding neck)	GQ2, GW2	X
Tri-Clamp 2" (special seal from Hyjoin Limited, UK)	TE2	X
Threaded pipe joint	MA2, MC2, ME2	X
Flush-mounted (fork can be positioned)	EE2	X
Aseptic	HE2	X
DRD	PE2	X
SMS	UE2	X
Varivent®	WE2	X

Note!
For CIP (Clean in Place) and SIP (Sterilize in Place) processes the pressure and temperture specifications of the process connections must be observed.

Warning!
To avoid risk of contamination, install according to the "Hygienic Equipment Design Criteria (HDC)" as stated in the Subgroup Design Principles of the EHEDG, Doc. 8, July 1993. The flow of liquid during cleaning is important and should be in compliance with HDC.

Other certificates

See "Ordering information"

Combination of housings and electronic inserts

Based on the various certificates, permissible combinations of housings *) and electronic inserts are given in the following table.
*) Abbreviations: Polyester = PBT, Steel 316L = St., Aluminium = Alu
Aluminium housing with separate connection compartment = Alu/sep

Certificate, applications		Housing	Electronic inserts
A	Without any special certificate (for non-hazardous area)	PBT, St., Alu, Alu/sep.	FEL51/52/54, FEL55/56/57/58/50A
D	Overfill protection to WHG (Germany)	PBT, St., Alu, Alu/sep.	FEL51/52/54, FEL55/56/57/58/50A
B	ATEX II 3G EEx nC IIC T6, WHG	PBT, St., Alu, Alu/sep.	FEL54
	ATEX II 3G EEx nC IIC T6, WHG ATEX II 3D T85°C	St., Alu, Alu/sep.	FEL54
C	ATEX II 3G EEx nA II T6, WHG	PBT, St., Alu, Alu/sep.	FEL51/52, FEL55/56/57/58/50A
	ATEX II 3G EEx nA II T6, WHG ATEX II 3D T85°C	St., Alu, Alu/sep.	FEL51/52, FEL55/56/57/58/50A
E	ATEX II 1/2 G, EEx de, WHG	Alu/sep.	FEL51/52/54, FEL55/56/57/58/50A
F	ATEX II 1/2 G, EEx ia IIC T6, WHG	PBT, St., Alu, Alu/sep.	FEL55/56/57/58/50A
	ATEX II 1/2 G, EEx ia IIC T6, WHG ATEX II 1/2 D, T80°C	St., Alu, Alu/sep.	FEL55/56/57/58/50A

Certificate, applications		Housing	Electronic inserts
G	ATEX II 1/2 G, EEx ia IIC T6	PBT, St., Alu, Alu/sep.	FEL55/56/57/58/50A
	ATEX II 1/2 G, EEx ia IIC T6 ATEX II 1/2 D, T80°C	St., Alu, Alu/sep.	FEL55/56/57/58/50A
H	ATEX II 1G, EEx ia IIC T6		FEL55/56/57/58/50A
J	ATEX II 1G, EEx ia IIC T6, WHG		FEL55/56/57/58/50A
I	ATEX II 1/2 G, EEx de	Alu/sep.	FEL51/52/54, FEL55/56/57/58/50A
K	ATEX II 1/2 G, EEx d IIC T6	Alu	FEL51/52/54, FEL55/56/57/58/50A
L	ATEX II 1/2 G, EEx d IIC T6, WHG	Alu	FEL51/52/54, FEL55/56/57/58/50A
P	FM, IS, Cl. I, II, III, Div. 1, Gr. A-G	PBT, St., Alu, Alu/sep. with NPT cable entry	FEL55/56/57/58
Q	FM, XP, Cl. I, II, III, Div. 1, Gr. A-G	Alu with NPT cable entry	FEL51/52/54, FEL55/56/57/58
R	FM, NI, Cl. I, Div. 2, Gr. A-D	St., Alu, Alu/sep. with NPT cable entry	FEL51/52/54, FEL55/56/57/58
		PBT with NPT cable entry	FEL55/56/57/58
U	CSA, General Purpose	St., Alu, Alu/sep. with NPT cable entry	FEL51/52/54, FEL55/56/57/58
		PBT with NPT cable entry	FEL51/52, FEL55/56/57/58
S	CSA, IS, Cl. I, II, III, Div. 1, Gr. A-G	PBT, St., Alu, Alu/sep. with NPT cable entry	FEL55/56/57/58
T	CSA, XP, Cl. I, II, III, Div. 1, Gr. A-G	Alu with NPT cable entry	FEL51/52/54, FEL55/56/57/58
V	TIIS Ex ia IIC T3	PBT, St., Alu	FEL57
W	TIIS Ex d IIB T3	Alu	FEL52/54
Y	Other certificate (for non-hazardous area)	PBT, St., Alu, Alu/sep.	FEL51/52/54, FEL55/56/57/58/50A

Note!
on polyester housing (PBT), electric connecting cables run in pipes:
Do not screw cable entries firmly to the piping. Use flexible connections (e.g. with armoured hose).
If the piping is used for earthing then ensure that there is a continuous electrical connection.

Note!
Despite the additional Dust-Ex-certificate, the FTL5x(H) is to be used as a liquid limit switch only.

Product structure
Liquiphant M
FTL50H
FTL51H

Design		Basic weight
FTL50H	Compact	0.7 kg
FTL51H	With extension pipe	0.7 kg

10 Approval:

A	Non-hazardous area		
B	ATEX II 3 G	EEx nC II T6	Overfill protection to WHG (Germany)
	ATEX II 3 D	T 85 °C*	
C	ATEX II 3 G	EEx nA II T6	Overfill protection to WHG (Germany)
	ATEX II 3 D	T 85 °C*	
D	Non-hazardous area		Overfill protection to WHG (Germany)
E	ATEX II 1/2 G	EEx de IIC T6	Overfill protection to WHG (Germany)
F	ATEX II 1/2 G	EEx ia IIC T6	Overfill protection to WHG (Germany)
	ATEX II 1/2 D	T 80 °C*	
G	ATEX II 1/2 G	EEx ia IIC T6	
	ATEX II 1/2 D	T 80 °C*	
H	ATEX II 1 G	EEx ia IIC T6	
I	ATEX II 1/2 G	EEx de IIC T6	
J	ATEX II 1 G	EEx ia IIC T6	Overfill protection to WHG (Germany)
K	ATEX II 1/2 G	EEx d IIC T6	
L	ATEX II 1/2 G	EEx d IIC T6	Overfill protection to WHG (Germany)
P	FM	IS, Class I, II, III	Division 1, Group A-G
Q	FM	XP, Class I, II, III	Division 1, Group B-G, for E5 housing Group A-G
R	FM	NI, Class I	Division 2, Group A-D
S	CSA	IS, Class I, II, III	Division 1, Group A-G
T	CSA	XP, Class I, II, III	Division 1, Group A-G
U	CSA	General Purpose	
V	TIIS	Ex ia IIC T3	
W	TIIS	Ex d IIB T3	
X	TIIS	Ex ia IIC T6	
7	TIIS	Ex d IIC T3	
8	TIIS	Ex d IIC T6	
Y	Special version		

*) not valid for PBT

20 Process Connection:

						Additional weight
GQ2	G ¾		316L	(FTL50H)	Thread ISO 228	
	Installation > accessory: welding neck					
GW2	G 1		316L		Thread ISO 228	0.2 kg
	Installation > accessory: welding neck					
BA2	DN32	PN6 A	316L		Flange EN 1092-1 (DIN 2527 B)	1.2 kg
BB2	DN32	PN25/40 A	316L		Flange EN 1092-1 (DIN 2527 B)	2.0 kg
BC2	DN40	PN6 A	316L		Flange EN 1092-1 (DIN 2527 B)	1.4 kg
BD2	DN40	PN25/40 A	316L		Flange EN 1092-1 (DIN 2527 B)	2.4 kg
BE2	DN50	PN6 A	316L		Flange EN 1092-1 (DIN 2527 B)	1.6 kg
BG2	DN50	PN25/40 A	316L		Flange EN 1092-1 (DIN 2527 B)	3.2 kg
BH2	DN65	PN6 A	316L		Flange EN 1092-1 (DIN 2527 B)	2.4 kg
BK2	DN65	PN25/40 A	316L		Flange EN 1092-1 (DIN 2527 B)	4.3 kg
BM2	DN80	PN10/16 A	316L		Flange EN 1092-1 (DIN 2527 B)	4.8 kg
BN2	DN80	PN25/40 A	316L		Flange EN 1092-1 (DIN 2527 B)	5.9 kg
BQ2	DN100	PN10/16 A	316L		Flange EN 1092-1 (DIN 2527 B)	5.6 kg
BR2	DN100	PN25/40 A	316L		Flange EN 1092-1 (DIN 2527 B)	7.5 kg
B82	DN25	PN25/40 A	316L		Flange EN 1092-1 (DIN 2527 B)	1.4 kg
CG2	DN50	PN25/40 B1	316L		Flange EN 1092-1 (DIN 2527 C)	3.2 kg
CN2	DN80	PN25/40 B1	316L		Flange EN 1092-1 (DIN 2527 C)	5.9 kg

20	Process Connection:					Additional weight
CQ2	DN100	PN10/16 B1		316L	Flange EN 1092-1 (DIN 2527 C)	5.6 kg
EE2	1" flush-mounted (52001047)			316L		0.3 kg
	Installation > accessory: welding neck					
HE2	DN50	Tube DIN 11850		316L	DIN 11864-1 A	0.3 kg
AA2	1¼"	150 lbs	RF	316/316L	Flange ANSI B16.5	1.2 kg
AC2	1½"	150 lbs	RF	316/316L	Flange ANSI B16.5	1.5 kg
AE2	2"	150 lbs	RF	316/316L	Flange ANSI B16.5	2.4 kg
AF2	2"	300 lbs	RF	316/316L	Flange ANSI B16.5	3.2 kg
AJ2	2½"	300 lbs	RF	316/316L (FTL51H)	Flange ANSI B16.5	4.8 kg
AL2	3"	150 lbs	RF	316/316L	Flange ANSI B16.5	4.9 kg
AM2	3"	300 lbs	RF	316/316L (FTL51H)	Flange ANSI B16.5	6.8 kg
AP2	4"	150 lbs	RF	316/316L	Flange ANSI B16.5	7.0 kg
AQ2	4"	300 lbs	RF	316/316L (FTL51H)	Flange ANSI B16.5	11.5 kg
A82	1"	150 lbs	RF	316/316L	Flange ANSI B16.5	1.0 kg
KA2	10 K 25		RF	316L	Flange JIS B2220	
KC2	10 K 40		RF	316L	Flange JIS B2220	
KE2	10 K 50		RF	316L	Flange JIS B2220	1.7 kg
KL2	10 K 80		RF	316L	Flange JIS B2220	
KP2	10 K 100		RF	316L	Flange JIS B2220	
MA2	DN32	PN25		316L	DIN 11851	0.1 kg
MC2	DN40	PN25		316L	DIN 11851	0.2 kg
ME2	DN50	PN25		316L	DIN 11851	0.3 kg
PE2	DRD	65 mm		316L		0.3 kg
TC2	DN25-38 (1...1½")			316L	ISO 2852 Tri-Clamp	
TE2	DN40-51 (2")			316L	ISO 2852 Tri-Clamp	0.1 kg
UE2	SMS 2"	PN25		316L		0.2 kg
WE2	DN65-162 PN10			316L	Varivent N tube	0.5 kg
YY9	Special version					

30	Probe Length; Type:			
	FTL50H			
	AC	Compact;	Ra <1.5 µm/120 grit	
	AD	Compact;	Ra <0.3 µm/320 grit / A3	
	IC	Compact;	Ra <1.5 µm/120 grit + temperature spacer	0.6 kg
	ID	Compact;	Ra <0.3 µm/320 grit / A3 + temperature spacer	0.6 kg
	QC	Compact;	Ra <1.5 µm/120 grit + pressure tight feed through	0.7 kg
	QD	Compact;	Ra <0.3 µm/320 grit / A3 + pressure tight feed through	0.7 kg
	FTL51H			
	BC	..... mm;	Ra <1.5 µm/120 grit	0.9 kg/m
	BD	..... mm;	Ra <0.3 µm/320 grit / A3	0.9 kg/m
	CC	..... inch;	Ra <1.5 µm/120 grit	2.3 kg/100 in
	CD	..... inch;	Ra <0.3 µm/320 grit / A3	2.3 kg/100 in
	DC	Length: type II*;	Ra <1.5 µm/120 grit	0.1 kg
	DD	Length: type II*;	Ra <0.3 µm/320 grit / A3	0.1 kg
	JC	..... mm;	Ra <1.5 µm/120 grit + temperature spacer	0.9 kg/m +0.6 kg
	JD	..... mm;	Ra <0.3 µm/320 grit + temperature spacer	0.9 kg/m +0.6 kg
	KC	..... inch;	Ra <1.5 µm/120 grit + temperature spacer	2.3 kg/100 in +0.6 kg
	KD	..... inch;	Ra <0.3 µm/320 grit + temperature spacer	2.3 kg/100 in +0.6 kg
	LC	Length: type II*;	Ra <1.5 µm/120 grit + temperature spacer	0.1 kg +0.6 kg
	LD	Length: type II*;	Ra <0.3 µm/320 grit + temperature spacer	0.1 kg +0.6 kg
	RC	..... mm;	Ra <1.5 µm/120 grit + pressure tight feed through	0.9 kg/m +0.7 kg
	RD	..... mm;	Ra <0.3 µm/320 grit + pressure tight feed through	0.9 kg/m +0.7 kg
	SC	..... inch;	Ra <1.5 µm/120 grit + pressure tight feed through	2.3 kg/100 in +0.7 kg
	SD	..... inch;	Ra <0.3 µm/320 grit + pressure tight feed through	2.3 kg/100 in +0.7 kg

30	Probe Length; Type:		
TC	Length: type II*;	Ra <1.5 µm/120 grit + pressure tight feed through	0.1 kg +0.7 kg
TD	Length: type II*;	Ra <0.3 µm/320 grit + pressure tight feed through	0.1 kg +0.7 kg
YY	Special version		

*) Replacing instruments: when vertically mounting a Liquiphant M FTL51H with length II, the switch point is at the same height as for the Liquiphant II FTL360, FTL365, FDL30, FDL35

40	Electronics; Output:		
A	FEL50A	PROFIBUS PA	
1	FEL51*	2-wire,	19...253 V AC
2	FEL52*	3-wire PNP,	10... 55 V DC
4	FEL54	relay DPDT,	19...253 V AC, 19...55 V DC
5	FEL55	8/16 mA,	11... 36 V DC
6	FEL56	NAMUR (L-H signal)	
7	FEL57	2-wire PFM	
8	FEL58*	NAMUR + test button (H-L signal)	
9	Special version		

*) Also available in compact housing

50	Housing; Cable Entry:				
C3	Compact 316L	IP66/68;	cable 5 m		
D3	Compact 316L	IP65;	plug Pg11	ISO 4400	
E3	Compact 316L	NEMA4X;	plug NPT ½	ISO 4400	
N3	Compact 316L	IP66/68;	plug M12		
E4	F16 Polyester	NEMA4X;	thread NPT ½		–0.1 kg
E5	F13/F17 Alu	NEMA4X;	thread NPT ¾		0.4 kg
E6	F15 316L	NEMA4X;	thread NPT ½		
E7	T13 Alu	coated IP66;	thread NPT ¾		0.8 kg
	separate connection compartment				
F4	F16 Polyester	IP66;	thread G ½		–0.1 kg
F5	F13/F17 Alu	IP66;	thread G ½		0.4 kg
F6	F15 316L	IP66;	thread G ½		
F7	T13 Alu	coated IP66;	thread G ½		0.8 kg
	separate connection compartment				
G4	F16 Polyester	IP66;	gland M20		–0.1 kg
G5	F13/F17 Alu	IP66;	gland M20 (EEx d > thread M20)		0.4 kg
G6	F15 316L	IP66;	gland M20		
G7	T13 Alu	coated IP66;	gland M20		0.8 kg
	separate connection compartment		(EEx d > thread M20)		
N4	F16 Polyester	IP66;	plug M12		
N5	F13/F17 Alu	IP66;	plug M12		
N6	F15 316L	IP66;	plug M12		
Y9	Special version				

60	Additional Option:
A	Basic version
B	CoC, EN 10204 – 3.1 material (316L wetted parts) Inspection certificate
C	EN 10204 – 3.1 material (316L wetted parts) Inspection certificate
S	GL/ABS marine certificate (FTL51H: max. 1600 mm)
Y	Special version

FTL5#H -							Complete product designation

Note!
The basic weight includes the compact sensor, thread adapter G ¾, electronic insert, steel housing

Earth Tech (Canada) Inc.

Reviewed for general conformance with design intent. Responsibility for detailed design in the shop drawings rests with the Contractor.

Responsibility for verification and correlation of field dimensions, fabrication process, techniques of construction, installation and coordination of all parts of the work rests with the Contractor.

REVIEWED _____

REVIEWED AS MODIFIED ✓

REVISE AND RE-SUBMIT _____

NOT REVIEWED _____

Project No. C28/16/79538

Date: 12/9/06 By: M. Jackson

ULTRASONIC LEVEL TRANSMITTER

Overview

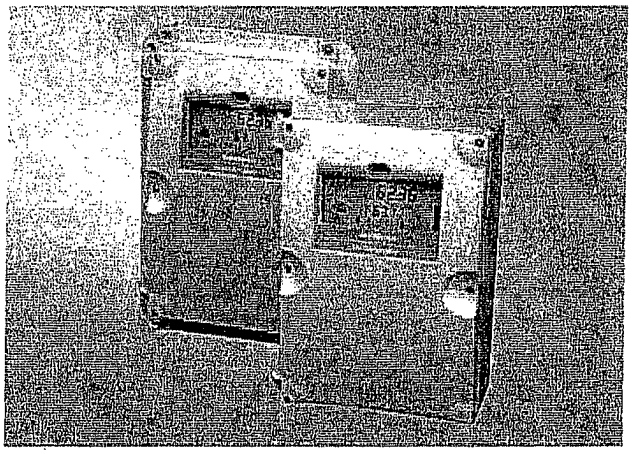

MultiRanger is a versatile short- to medium-range ultrasonic single- and multi-vessel level monitor/controller for virtually any application in a wide range of industries.

Benefits

- Digital input for back-up level overide from point level device
- Communication using built-in Modbus RTU via RS-485
- Compatible with SmartLinx system and SIMATIC PDM and Dolphin Plus configuration software
- Single or dual point level monitoring
- Auto False-Echo Suppression for fixed obstruction avoidance
- Differential amplifier transceiver for common mode noise reduction and improved signal-to-noise ratio
- MultiRanger 100: level measurements, simple pump control, and level alarm functions
- MultiRanger 200: level, volume and flow measurements in open channels, differential control, extended pump control and alarm functions
- Wall and panel mounting options

Application

MultiRanger can be used on different materials, including fuel oil, municipal waste, acids, woodchips, or on materials with high angles of repose. MultiRanger offers true dual point monitoring, digital communications with built-in Modbus® RTU via RS-485, as well as compatibility with Dolphin Plus and SIMATIC PDM, allowing PC configuration and set-up. MultiRanger features Sonic Intelligence® advanced echo-processing software for increased reading reliability.

MultiRanger 100 offers cost-effective level alarming, as well as on/off and alternating pump control. MultiRanger 200 will monitor open channel flow and features more advanced relay alarming and pump control functions as well as volume conversion.

It is compatible with chemical-resistant Echomax® transducers that can be used in hostile environments at temperatures as high as 145 °C (293 °F).

Design

The MultiRanger is available in wall or panel mounting options.

Technical specifications

Mode of Operation	
• Measuring Principle	Ultrasonic level measurement
• Measuring range	0.3 to 15 m (1 to 50 ft)
Input	
• Analog (only MultiRanger 200)	0 to 20 mA or 4 to 20 mA, from alternate device, scaleable
• Digital	10 to 50 V DC switching level Logical 0 = < 0.5 V DC Logical 1 = 10 to 50 V DC Max. 3 mA
Output	
• Echomax® Transducer	44 kHz
• Ultrasonic transducer	Compatible transducers ST-H and Echomax series XPS-10/10F, XPS 15/15F, XCT-8, XCT-12 and XRS-5
• Relays	Rating 5 A at 250 V AC, non-inductive
- Version with 3 relays	2 Form 'A' / 1 Form 'C'
- Version with 6 relays	4 Form 'A' / 2 Form 'C'
• mA output	0 to 20 mA or 4 to 20 mA
- Max. load	750 Ω, isolated
- Resolution	0.1% of range
Accuracy	
• Error in measurement	0.25% of range or 6 mm (0.24"), whichever is greater
• Resolution	0.1% of measuring range[1] or 2 mm (0.08"), whichever is greater
• Temperature compensation	• -50 to +150 °C (-58 to +302 °F) • Integral temperature sensor • External TS-3 temperature sensor • Programmable fixed temperature values
• Temperature error	
- Sensor	0.09% of range
- Fixed temperature value	0.17% / °C deviation from programmed value
Rated operating conditions	
Installation conditions	
• Location	Indoor/outdoor
• Installation category	II
• Pollution degree	4
Ambient conditions	
• Ambient temperature (housing)	-20 to +50 °C (-58 to +122 °F)
Design	
• Weight	
- Wall mount	1.37 kg (3.02 lbs.)
- Panel mount	1.50 kg (3.31 lbs.)
• Material (housing)	Polycarbonate
• Degree of protection (housing)	
- Wall mount	IP65 / Type 4X / NEMA 4X
- Panel mount	IP54 / Type 3 / NEMA 3

1) Program range is defined as the empty distance to the face of the transducer plus any range extension

Electrical connection

• Transducer and mA output signal	2-core copper conductor, twisted, with shield and drain conductor, 300 Vrms, 0.5 to 0.75 mm² (22 to 18 AWG), nomianl capacitance between adjacent conductors @ 1kHz = 62.3 pF/m (10 pF/ft), nominal capacitance between conductor and shield @ 1 kHz = 108.3 pF/m (33 pF/ft)(Belden® 8760 or equivalent is acceptable).
• Max. separation between transducer and transceiver	365 m (1200 ft)
Displays and controls	100 x 40 mm (4 x 1.5") multi-block LCD with backlighting
• Programming	Programming using hand-held programmer, SIMATIC PDM or via PC with Dolphin Plus software
Power supply	
• AC version	100 to 230 V AC ± 15%, 50 / 60 Hz, 36 VA (17 W)
• DC version	12 to 30 V DC (20 W)
Certificates and approvals	• CE[2], FM, $CSA_{NRTL/C}$, UL listed • CSA Class I, Div. 2, Group A, B, C and D, Class II, Div.2, Group F and G, Class III (wall mount only)
Communication	• RS-232 with Modbus RTU or ASCII via RJ-11 connector • RS-485 with Modbus RTU or ASCII via terminal strips • Optional: SmartLinx® cards or RS-485 modem kit

2) EMC performance available on request.

Dimensional drawings

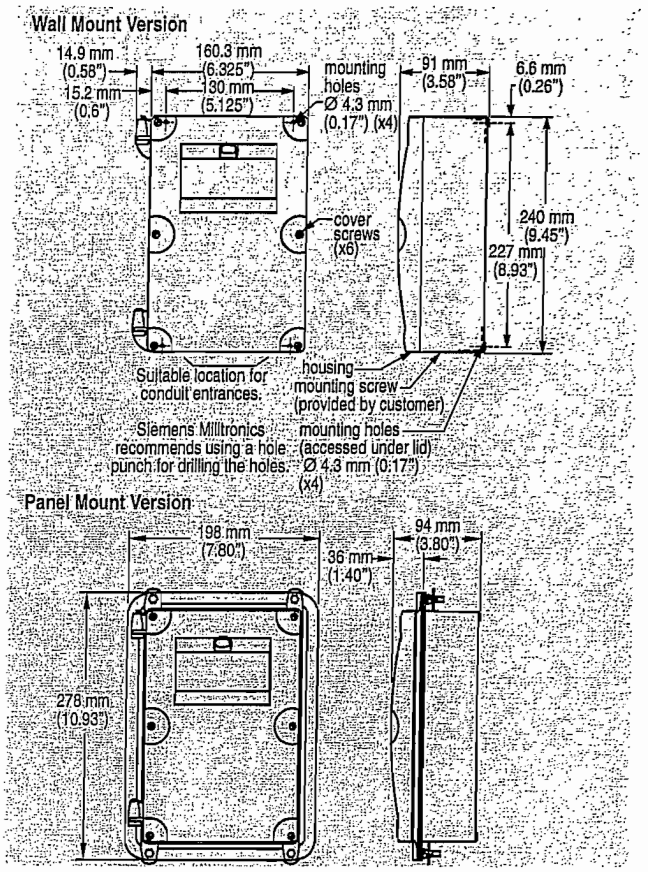

MultiRanger dimensions

Schematics

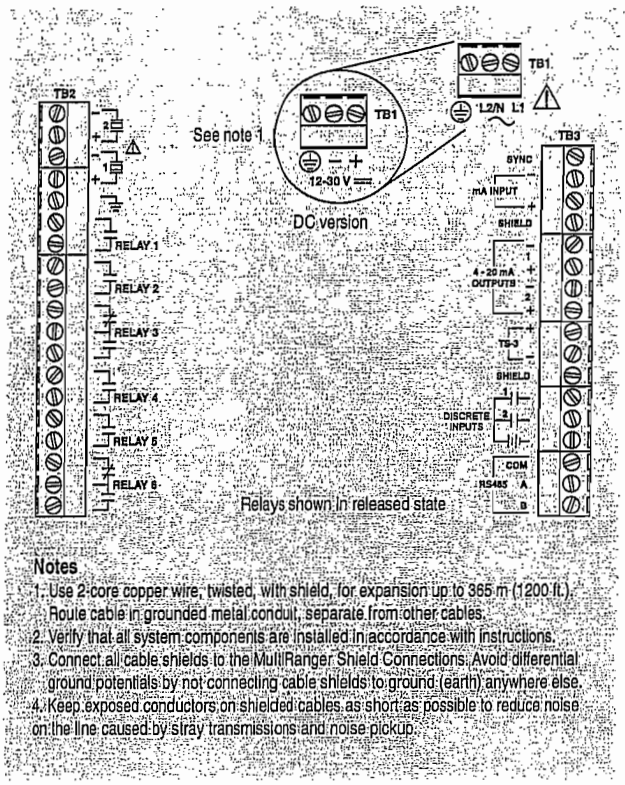

Notes

1. Use 2-core copper wire, twisted, with shield, for expansion up to 365 m (1200 ft.). Route cable in grounded metal conduit, separate from other cables.
2. Verify that all system components are installed in accordance with instructions.
3. Connect all cable shields to the MultiRanger Shield Connections. Avoid differential ground potentials by not connecting cable shields to ground (earth) anywhere else.
4. Keep exposed conductors on shielded cables as short as possible to reduce noise on the line caused by stray transmissions and noise pickup.

MultiRanger connection diagram

Ordering data

	Order No.
MultiRanger Versatile short- to medium-range ultrasonic single- and multi-vessel level monitor/controller for virtually any application in a wide range of industries	C) 7ML1033-
Versions	
MultiRanger 100, level measurement only	1
MultiRanger 200, level, volume, flow, and differential measurements	2
Mounting, housing design	
Wall mount, standard version	A
Wall mount, 4 entries, M20	B
Panel mount (CE, CSAus/c, FM, UL)	C
Power supply	
100 to 230 V AC	A
12 to 30 V DC	B
Number of measurement points	
Single point version	0
Dual point version	1
Communication (SmartLinx)	
Without module	0
SmartLinx® Allen-Bradley® Remote I/O module	1
SmartLinx PROFIBUS DP module	2
SmartLinx DeviceNet™ module See SmartLinx product page on page 4/111 ff. for more information.	3
Output relays	
3 relays, 2 form A, 1 form C, 250 V AC	1
6 relays, 4 form A, 2 form C, 250 V AC	2
Approvals	
General Purpose CE, FM, CSAus/c, UL listed	A
CSA Class I, Div. 2, Group A, B, C and D; Class II, Div 2, Group F and G; Class III (for wall mount applications only)	B
Instruction Manual	
English	C) 7ML1998-5FB03
French	C) 7ML1998-5FB13
Spanish	C) 7ML1998-5FB23
German Note: The instruction manual should be ordered as a separate line on the order.	C) 7ML1998-5FB33
Other Instruction Manuals	
SmartLinx Allen-Bradley Remote I/O, English	C) 7ML1998-1AP03
SmartLinx PROFIBUS DP, English	C) 7ML1998-1AQ03
SmartLinx PROFIBUS DP, German	C) 7ML1998-1AQ32
SmartLinx PROFIBUS DP, French	C) 7ML1998-1AQ12
SmartLinx DeviceNet, English Note: The appropriate SmartLinx instruction manual should be ordered as a seperate line on the order.	C) 7ML1998-1BH02
Accessories	
Hand-held programmer	7ML1830-2AM
Tag, stainless steel, 12 x 45 mm, one text line, suitable for enclosure	PBD-45000786
M20 cable gland kit (6 M20 cable glands, 6 M20 nuts, 3 stop plugs)	7ML1830-1GM
TS-3 Temperature Sensor -- see TS-3 on page 5/98	
Spare Parts	
Power Supply Board (100 to 230 V AC)	C) PBD-51035590
Power Supply Board (12 to 30 V DC)	C) PBD-51035592
Display Board	C) PBD-51035606

®Modbus is a registered trademark of Schneider Electric.
®Belden is a registered trademark of Belden Wire and Cable Company.
®Allen-Bradley is a registered trademark of Rockwell Automation.
™DeviceNet is a trademark of Open DeviceNet Vendor Association (ODVA)
C) Subject to export regulations AL: N, ECCN: EAR99.

Overview

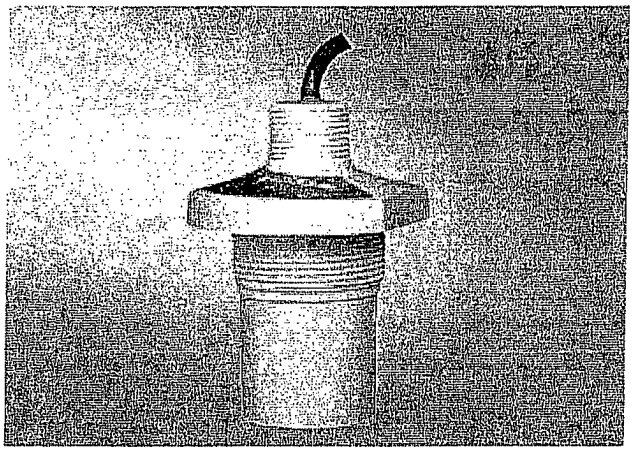

ST-H transducers use ultrasonic technology to measure level in chemical storage and liquid tanks.

Benefits

- Can be mounted on a 2" standpipe
- Immune to corrosive and harsh environments
- Integral temperature sensor

Application

The narrow design of the ST-H allows the transducer to be mounted on a 2" standpipe. When mounted correctly, it is completely protected from the process, and can even be used in harsh, corrosive environments.
During operation, the ultrasonic transducer emits acoustic pulses in a narrow beam perpendicular [1] to the transducer face. The level transceiver measures the propagation time between pulse emission and reception of the echo to calculate the distance from the transducer to the material. Variations in sound velocity due to changes in temperature within the permissible range are automatically compensated by the integral temperature sensor.

1) Definition of beam width: twice the angle at which the off-axis transmission is 3 dB less than the acoustic pressure level of the transmission axis (as measured equidistant from the sensor face)

Technical specifications

Mode of operation	
• Measuring principle	Ultrasonic transducer
Input	
• Measuring range	0.3 to 10 m (1 to 33 ft.)
Output	
• Frequency	44 kHz
• Beam angle	12°
Accuracy	
• Temperature compensation	Compensated by integral temperature sensor
Rated operating conditions	
• Pressure	Normal atmospheric pressure
Ambient conditions	
• Ambient temperature	-20 to +60 °C (-5 to +140 °F) (ATEX approved model) -40 to +73 °C (-40 to +163 °C) (CSA and FM approved model)
Design	
• Weight [1]	1.4 kg (3 lbs)
• Material (enclosure)	Base and lid made of ETFE (epoxy fitted joint)[2]
• Process connection	2" NPT, 2" BSP or PF2
• Degree of protection	IP68
• Cable connection	2-core shielded/twisted, 0.5 mm² (20 AWG), PVC sheath
• Cable (max. length)	365 m (1200 ft.) with RG 62 A/U coaxial cable
Options	
• Flange adapter	3" Universal (fits DN 65, PN 10, and 3" ANSI)
• Submergence coupling	For maintaining high level readings while the transducer is submerged
Certificates and approvals	CE [3], CSA, FM Class 1, Div. 1, ATEX II 2G

1) Approximate shipping weight of transducer with standard cable length.
2) When measuring chemicals, check compatibility of ETFE and epoxy, or mount joint external to process.
3) EMC certificate available on request.

Dimensional drawings

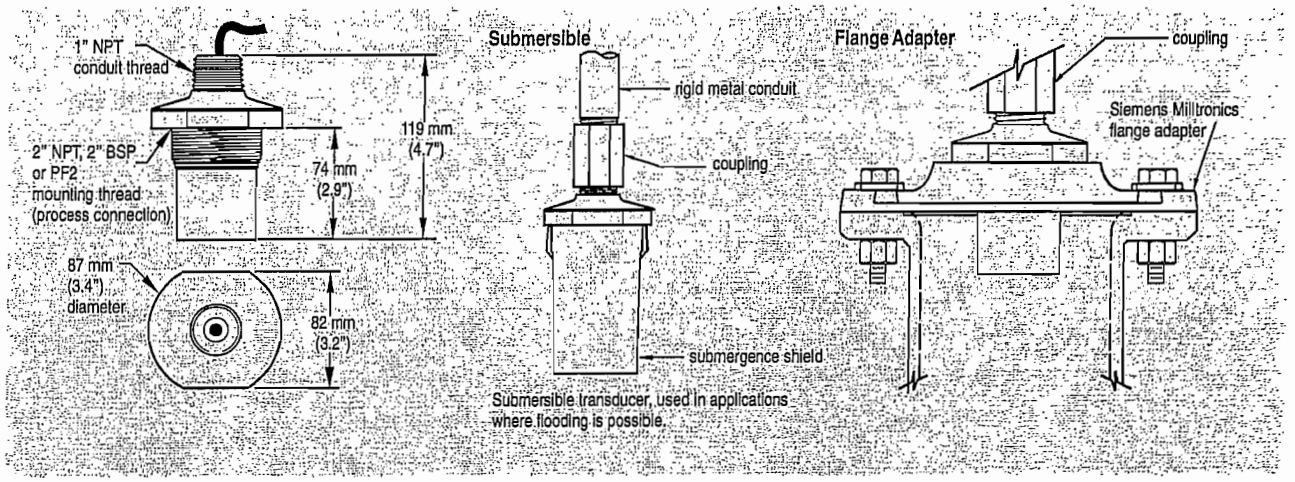

ST-H ultrasonic transducer dimensions

Schematics

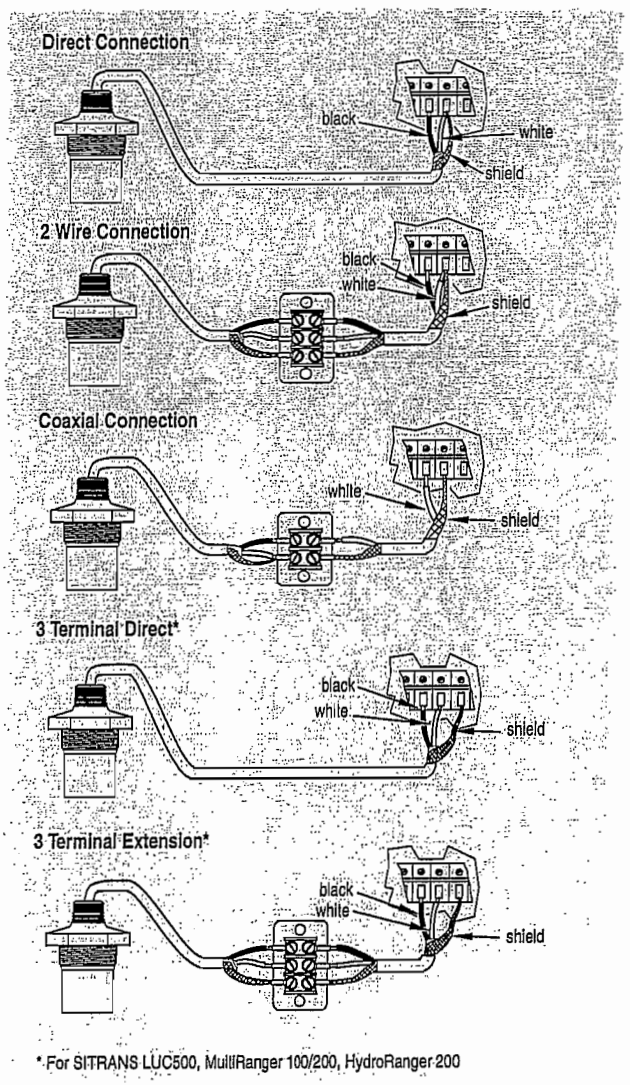

*For SITRANS LUC500, MultiRanger 100/200, HydroRanger 200

ST-H ultrasonic transducer connections

Ordering data

		Order No.
Echomax ST-H ultrasonic transducer	C)	**7ML1100 -**
Level measurement in chemical storage and liquid tanks, measuring range: min. 0.3 m, max. 10 m		A 0
Process connection		
2" NPT		0
2" BSP		1
PF 2		2
Cable length		
5 m		A
10 m		B
30 m		C
50 m		D
100 m		E
Approvals		
FM Class 1, Div. 1 (only with 2" NPT process connection)		2
ATEX II 2G, CSA		3
Instruction Manual		
Quick Start Manual, multi-language	C)	**7ML1998-5QK81**
Note: Due to ATEX regulations, one Quick start manual is included with every transducer.		
Applications Guidelines, multi-language	C)	**7ML1998-5HV61**
Note: The Applications Guidelines should be ordered as a separate line item on the order.		
Accessories		
ST-H Universal Submergence Shield		**7ML1830-1CF**
Universal Box Bracket, Mounting Kit		**7ML1830-1BK**
Universal Mounting Adapter, 2" NPT		**7ML1830-1BT**
Universal Mounting Adapter, 2" BSP		**7ML1830-1BU**
Universal Mounting Adapter, PF2		**7ML1830-1BV**

C) Subject to export regulations AL: N, ECCN: EAR99.

Earth Tech (Canada) Inc.

Reviewed for generall conformance with design intent. Responsibility for detailed design in the shop drawings rests with the Contractor.

Responsibility for verification and correlation of field dimensions, fabrication process, techniques of construction, installation and coordination of all parts of the work rests with the Contractor.

REVIEWED ✓

REVIEWED AS MODIFIED

REVISE AND RE-SUBMIT

NOT REVIEWED

Project No. C28/16/79538

Date: 12/9/06 By: [illegible]

HYDROGEN GAS DETECTOR

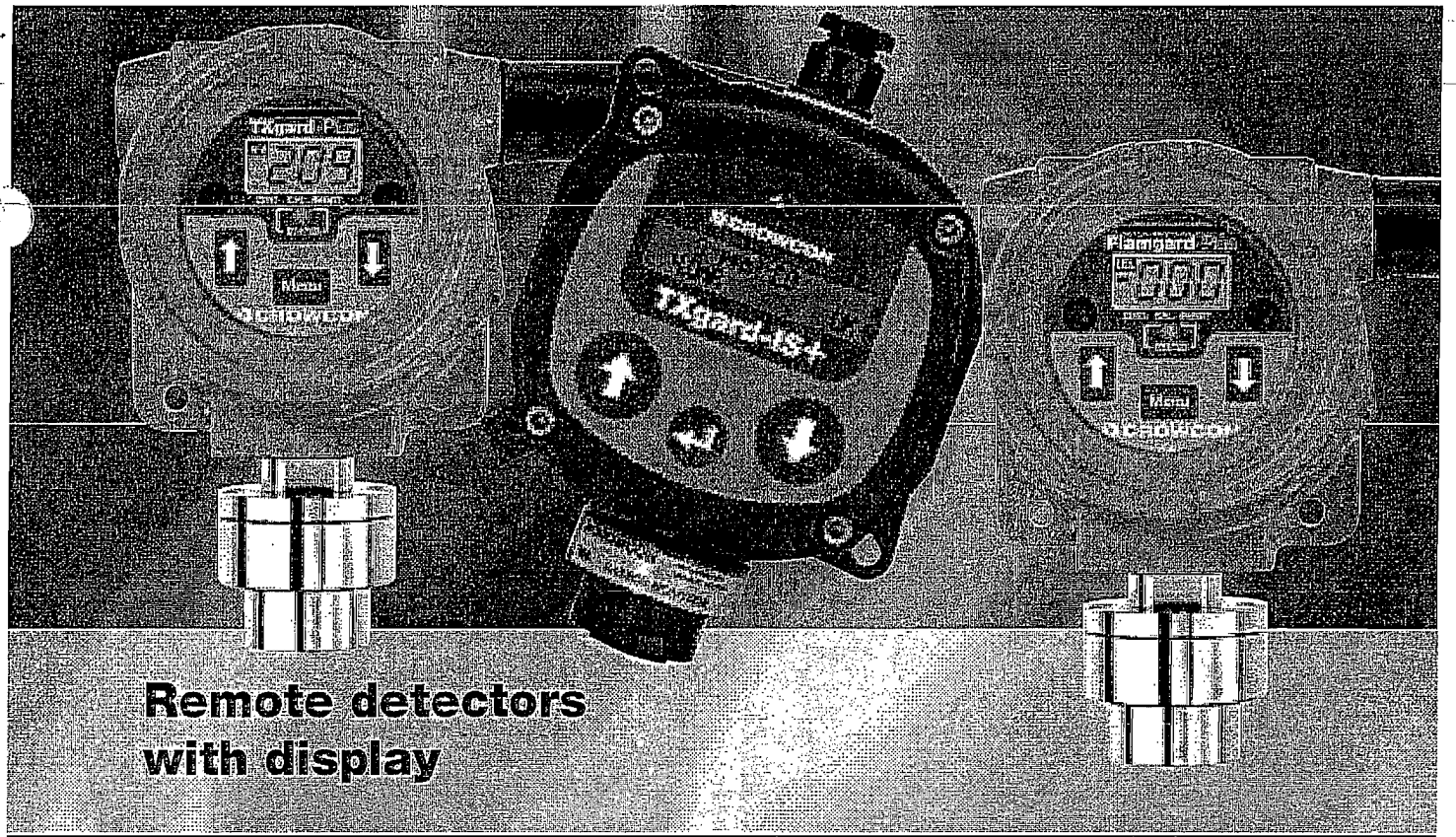

Remote detectors with display

TXgard and Flamgard Plus

The Flamgard and TXgard 'Plus' range of detectors offers reliable detection of flammable, toxic or oxygen gases with a local display and optional relays.

Three models are available to suit all requirements:

Flamgard Plus: 'Exd – Flameproof' flammable gas detector with local display and optional relays.
~~TXgard Plus: 'Exd – Flameproof' toxic or oxygen gas detector with local display and optional relays.~~
~~TXgard-IS+: 'I.S. – Intrinsically Safe' toxic or oxygen gas detector with local display.~~

In short, a range of gas detectors **you can trust.**

Low cost of ownership

- Non-intrusive one-man calibration
- Long-life sensors
- Simple parts replacement

Rugged and reliable

- TXgard Plus and Flamgard Plus are constructed using marine grade aluminium with a stainless steel sensor housing
- TXgard-IS+ is made from tough carbon-loaded nylon
- Proven track record for operation in the harshest environments

Wide range of sensors

- Choice of catalytic beads for a wide selection of flammable gases and vapours
- Extensive range of electrochemical sensors for toxic gases and oxygen

Flexible output options

- 4-20mA current sink or source
- 2 or 3 wire formats
- Optional relays for alarm and fault

CROWCON
Gas Detection You Can Trust

TXgard and Flamgard Plus

CROWCON
Gas Detection You Can Trust

Specifications

Model	Flamgard Plus	TXgard Plus	TXgard-IS+
	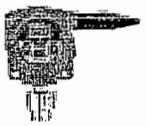	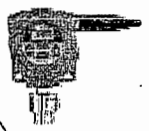	
Size	200h x 115w x 115d (mm)	200h x 115w x 115d (mm)	160h x 123w x 92d (mm)
Weight	2.2 Kg	2.2 Kg	0.7 Kg
Enclosure material	Junction box: Marine grade alloy Sensor housing: 316 stainless steel	Junction box: Marine grade alloy Sensor housing: 316 stainless steel	Junction box: Carbon loaded nylon Sensor housing: ABS plastic
Ingress protection	IP65, IP66 with weatherproof cap	IP65, IP66 with weatherproof cap	IP65, IP66 with weatherproof cap
Cable entries	2 x M20 or ½"NPT	2 x M20 or ½"NPT	1 x M20 or ½"NPT (with adaptor)
Power	10-30Vdc, 210mA max. (relay version), 160mA max. (non-relay.)	10-30Vdc, 100mA max. (relay version), 50mA max. (non-relay.)	10.8-30Vdc, 4-20mA loop-powered
Operating temperature	-10°C to +55°C (14 to 131°F)	-10°C to +55°C (14 to 131°F) Sensor dependant, contact Crowcon for details	-20°C to +55°C (-4 to 131°F) Sensor dependant, contact Crowcon for details
Humidity	0 to 99% RH non-condensing	15 to 90% RH non-condensing	15 to 90% RH non-condensing
Relays (optional)	SPNO or SPNC contacts rated 30Vdc 1A (non-inductive load) for Alarm 1, Alarm 2, Fault	SPNO or SPNC contacts rated 30Vdc 1A (non-inductive load) for Alarm 1, Alarm 2, Fault	N/A
Display	3-digit LCD back-lit display. LED status indicator	3-digit LCD back-lit display. LED status indicator	2-line, 16 character LCD
Calibration method	Via magnetically operated buttons	Via magnetically operated buttons	Via push-buttons
Electrical output	3-wire 4-20mA (current sink or source)	3-wire 4-20mA (current sink or source)	2-wire 4-20mA (current sink)
Terminals	Suitable for up to 1.5mm² cable	Suitable for up to 1.5mm² cable	Suitable for up to 2.5mm² cable
Sensor type	Catalytic bead	Electrochemical	Electrochemical
Repeatability	+/- 2% FSD	+/- 2% FSD	+/- 2% FSD
Zero drift	+/- 2% FSD, 6 months	+/- 2% FSD, 6 months	+/- 2% FSD, 6 months
Response time	T90 <10 secs. typically	T90 <10 secs. typically (oxygen) T90 <30 secs. typically (toxic)	T90 <10 secs. typically (oxygen) T90 <30 secs. typically (toxic)
Hazardous area zones	Zone 1 or Zone 2	Zone 1 or Zone 2	Zone 0, Zone 1 or Zone 2 (when connected via an isolation device)
Approvals	Ⓔx II 2 G EExd IIC T6 UL Class 1 Div. 1 Groups B, C, D	Ⓔx II 2 G EExd IIC T6 UL Class 1 Div. 1 Groups B, C, D	Ⓔx II 1 GD EExia IIC T6 UL Class 1 Div. 1 Groups A, B, C, D

Available ranges

Gas type	LTEL (ppm)	STEL (ppm)	Range Available TXgard-IS+	Ranges Available: TXgard Plus
Ammonia (NH3)	25	35	50,100,1000 ppm	50,100,150,300 ppm
Carbon Monoxide (CO)	30	200	250,500 ppm	100,250,500,1000 ppm
Chlorine (Cl2)	0.5	1	10,20 ppm	
Ethylene Oxide (C2H4O)	5 (MEL)			10 ppm
Hydrogen (H2)	N/A	N/A	2000,20000 ppm (50% lel)	
Hydrogen Cyanide (HCN)	10 (MEL)		25 ppm	
Hydrogen Fluoride (HF)	3	6	10 ppm	
Hydrogen Sulphide (H2S)	5	10	25,50,100 ppm	10,15,20,25,30,50,100,200 ppm
Nitrogen Dioxide (NO2)			10 ppm	
Ozone (O3)	0.1	0.3	1 ppm	
Oxygen (O2)	N/A	N/A	25% Vol	25% Vol
Phosphine (PH3)	0.3	1	0.3 ppm	
Phosphine (PH3)			2 ppm	
Sulphur Dioxide (SO2)	1	3	10,20,30 ppm	

Other ranges may be available, please contact Crowcon.

Gas type	LEL (%vol)	Ranges Available Flamgard Plus
Acetylene (C2H2)*	2.5 (2.3)	0-100% lel
Ammonia (NH3)	15	0-100% lel
Butane (C4H10)	1.8 (1.4)	0-100% lel
Ethane (C2H6)	3 (2.4)	0-100% lel
Ethylene (C2H4)	2.7 (2.3)	0-100% lel
Hexane (C6H14)	1.2	0-100% lel
Hydrogen (H2)	4	0-100% lel
LPG	2	0-100% lel
Methane (CH4)	5 (4.4)	0-100% lel
Pentane (C5H12)	1.5 (1.4)	0-100% lel
Petrol	1.4 (1.2)	0-100% lel
Propane (C3H8)	2.2 (1.7)	0-100%

Ethanol, Methanol and Propanol also available.

Figures in brackets are taken from IEC61779

*Acetylene not available in UL certified form.

A HALMA GROUP COMPANY

P03019 Issue 1 10/04

UK Office
Crowcon Detection Instruments Ltd
2 Blacklands Way
Abingdon Business Park
Abingdon
Oxfordshire OX14 1DY
United Kingdom
Tel: +44 (0) 1235 557700
Fax: +44 (0) 1235 557749
Email: crowcon@crowcon.com
Web Site: www.crowcon.com

USA Office
Crowcon Detection Instruments Ltd
2001 Ford Circle, Suite F
Park 50 Technecenter
Milford, OH 45150
USA
Tel: +1 513 831 3877 or
+1 800 5 CROWCON
Fax: +1 513 831 4263
Email: sales@crowconusa.com
Web Site: www.crowcon.com

Rotterdam Office
Crowcon Detection Instruments Ltd
Viambloem 129
3068JG Rotterdam
Netherlands
Tel: +31 10 421 1232
Fax: +31 10 421 0542
Email: crowcon@crowcon.net
Web Site: www.crowcon.net

Singapore Office
Crowcon Detection Instruments Ltd
Block 192 Pandan Loop
#05-01 Pantech Industrial Complex
Singapore 128381
Tel: +65 6745 2936
Fax: +65 6745 0467
Email: sales@crowcon.com.sg
Web Site: www.crowcon.com

Crowcon reserves the right to change the design or specification of this product without notice

CROWCON Instructions

Flamgard-Plus

Flameproof Flammable Gas Detector

with Non-intrusive One-man Calibration

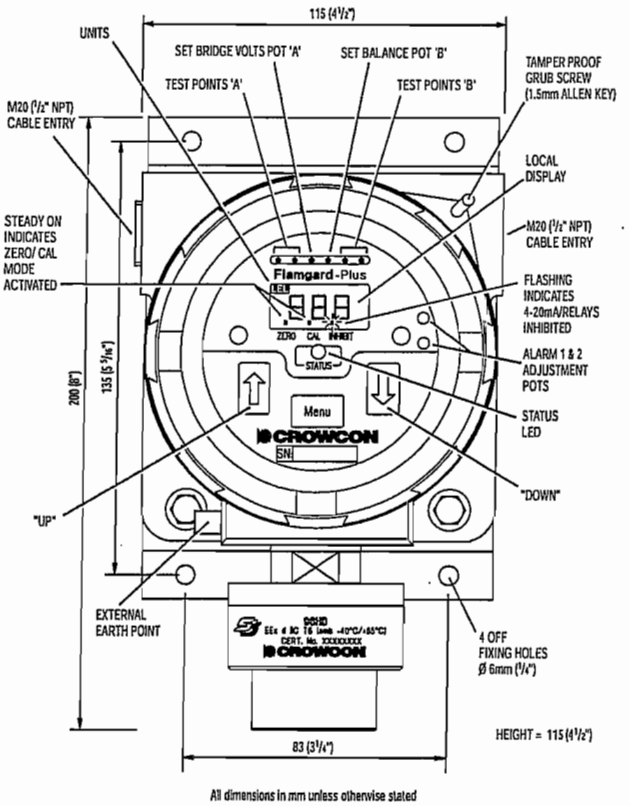

Diagram 1: Flamgard Plus general arrangement

1. INTRODUCTION

1.1 Product overview

Flamgard Plus is a flameproof flammable gas detector suitable for use in zone 1 or 2 hazardous areas. It is designed to detect flammable gas, present in ambient air, at concentrations not exceeding the Lower Explosive Limit (LEL) of the target gas for which it is calibrated. A local display and magnetically operated switches allow non-intrusive one-man calibration without a hot work permit. Powered by 24 V dc (nominally) Flamgard-Plus provides a 4-20 mA signal (sink or source) proportional to the gas concentration and can also be fitted with optional alarm and fault relays. For a list of flammable gases that can be detected, please contact Crowcon.

1.2 Product description

Flamgard Plus comprises four parts; 96HD sensor housing, junction box, amplifier and terminal board. Diagram 1 details Flamgard Plus. The overall assembly is certified EEx d IIC T6 in Europe and Class 1 , Zones 1&2 AEx d IIC T6 in the USA.

The 96HD sensor housing is a modular stainless steel assembly that dismantles to allow plug-in pellistor sensors to be replaced easily (see Diagram 4). The assembly screws into an M20 entry on the junction box.

The junction box is manufactured from marine grade alloy and is supplied with 2 x M20 (1/2" NPT for USA) cable entries for customer use. Alternative cable entries are available from Crowcon.

The amplifier plugs into the terminal board, and is held in place by two captive screws. The amplifier provides power to the pellistor sensor, local display and controls, and a 4-20 mA signal proportional to the gas concentration for connection to a control panel. To remove, turn screws anti-clockwise and use them to pull amplifier out of the enclosure.

All electrical connections are made via the terminal board mounted in the base of the junction box (see Diagram 2). Optional alarm relays (AL1 & AL2) and one fault relay (FAULT) are mounted on the terminal board which may be used to drive local warning devices or connect Flamgard-Plus to a control panel.

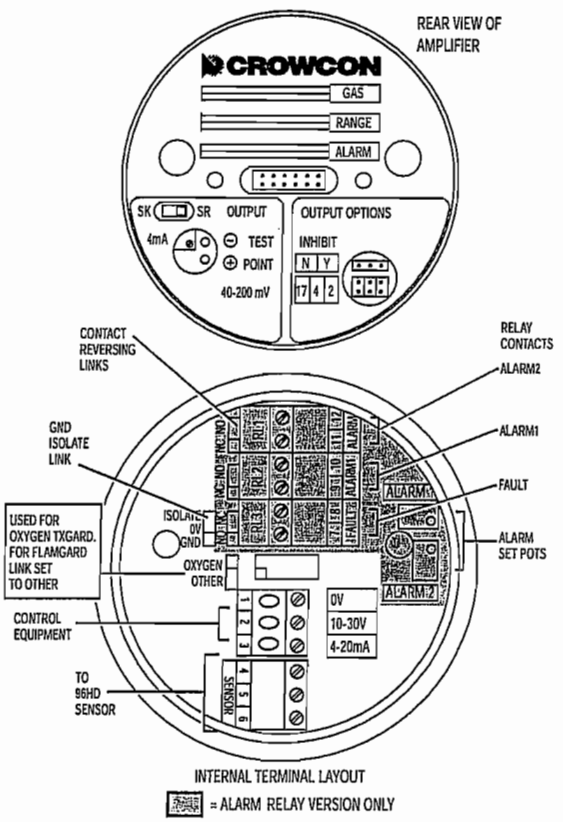

Diagram 2: Terminal and amplifier layouts

1.3 Status Indication

Flamgard Plus includes a local display and status LED, visible through the junction box window. This is shown in Diagram 1.

The display shows the current flammable gas concentration in the range 0-100%LEL and current mode of operation ie NORMAL, ZERO or CAL. The LED shows the current alarm state of the detector. This is summarised in Table 1.

Operational state	LED indication	4-20mA outputs*	Relay states*	Comment*
Normal operation	Steady green	4 to 7.2mA	AL1 - Off AL2 - Off FAULT - On	0 to 20% LEL
Normal operation (Alarm 1)	Steady red	7.2 to 10.4mA	AL1 - On AL2 - Off FAULT - On	20 to 40% LEL
Normal operation (Alarm 2)	Flashing red	10.4 to 20mA	AL1 - On AL2 - On FAULT - On	40 to 100% LEL
Over-range	Flashing red	24mA (clamp)	AL1 - On AL2 - On FAULT - On	>100% LEL Display back-light flashes
Zero/calibration mode	Flashing green	Configuration dependent (see section 2)	Configuration dependent (see section 2)	Latched until reset via 'MENU'
Detector fault	Steady amber	0mA	AL1 - Off AL2 - Off FAULT - Off	

*As standard, AL1 = 20%LEL and AL2 = 40%LEL

Relay version only

Table 1: LED status indicator summary.

2. DETECTOR CONFIGURATION

2.1 Standard configuration

As standard, Flamgard-Plus is factory set as follows:

Current source with	0 mA	= Fault
	2 mA	= Inhibit ie. Zero/Cal mode
	4-20 mA	= Normal operation
	24 mA	= Over-range clamp
AL1 relay	Alarm level 1 set to 20%LEL Normally de-energised, energising on alarm Contact normally open (NO), closing on alarm	
AL2 relay	Alarm level 2 set to 40%LEL Normally de-energised, energising on alarm Contact normally open (NO), opening on alarm	
FAULT relay	Normally energised, de-energising on fault Contact normally closed (NC), opening on fault	
Alarm/fault relays automatically reset when alarm or fault has cleared.		
INHIBIT	Normally selected. ie. when CAL/ZERO selected current output is forced to 2mA and relays are held in normal/no alarm state.	

Location of links are shown in Diagram 2.

2.2 4-20mA options

To change current source output to sink, set switch to 'SK' position.
To change Inhibit from 2 mA to 4 mA, fit link to '4' position.

2.3 Relay options

To change AL1 or AL2 relay from NO to NC, fit link in the 'NC' position.
To change FAULT relay from NC to NO, fit link in the 'NO' position.

2.4 Inhibit options

To not inhibit 4-20 mA signal and relays, fit link to 'N' and link to '4'.

3. INSTALLATION

WARNING

Flamgard Plus is designed for use in Zone 1 and 2 hazardous areas and is certified EEx d IIC T6 (AEx d IIC T6 in USA). Installation must be in accordance with the recognised standards of the appropriate authority in the country concerned. For more information contact Crowcon. Prior to carrying out any work ensure local regulations and site procedures are followed.

3.1 Location

There are no rules which dictate the siting and location of detectors, however, considerable guidance is available from BS6959:1988 – 'British Standard Code of Practice for the Selection, Installation, Use and Maintenance of Apparatus for the Detection and Measurement of Combustible Gases'. In the USA refer to the National Electrical Code (NEC 1999). Similar international codes of practice may be used where applicable. In addition certain regulatory bodies publish specifications giving minimum gas detection requirements for specific applications.

The detector should be mounted where the gas is most likely to be present. The following points should be noted when locating flammable gas detectors:

- To detect gases which are lighter than air e.g. methane, detectors should be mounted at high level and Crowcon recommend the use of a Collector Cone, **Part No. C01051**.
- To detect heavier than air gases e.g. butane, detectors should be mounted at low level.
- When locating detectors consider the possible damage caused by natural events e.g. rain or flooding. For detectors mounted outdoors Crowcon recommend the use of a Weatherproof Cap, **Part No. C01442**.
- Consider ease of access for functional testing and servicing.
- Consider how the escaping gas may behave due to natural or forced air currents. Mount detectors in ventilation ducts if appropriate.
- Consider the process conditions. Butane is normally heavier than air, but if released from a process line which is at an elevated temperature and/or under pressure the gas may rise rather than fall.

The placement of detectors should be determined following advice of experts having specialist knowledge of gas dispersion, the plant processing equipment as well as safety and engineering issues. **The agreement reached on the locations of sensors should be recorded.** Crowcon would be pleased to assist in the selection and siting of gas detectors.

3.2 Mounting

The mounting detail of Flamgard Plus is given in Diagram 1. Flamgard Plus should be installed at the designated location with the detector pointing down. This ensures that dust or water will not collect on the sinter and stop gas entering the detector.

3.3 Cabling Requirement

Cabling to Flamgard Plus must be in accordance with the recognised standards of the appropriate authority in the country concerned and meet the electrical requirements of the detector. Crowcon recommend the use of steel wire armoured (SWA) cable and suitable explosion proof glands must be used. Alternative cabling techniques, such as steel conduit, may be acceptable provided appropriate standards are met.

Flamgard Plus requires a dc supply of 10-30 V at up to 210 mA. Ensure the minimum dc supply of 10 V is observed at the detector, taking into account the voltage drop due to cable resistance.

For example, a nominal dc supply at the control panel of 24 V has a guaranteed minimum supply of 18V. The maximum voltage drop allowed is therefore 8V. Flamgard Plus can demand up to 210 mA and so the maximum loop resistance allowed is 38 Ohms. A 1.5 mm^2 cable will typically allow cable runs up to 1500 m. Table 2 shows maximum cable distances given typical cable parameters.

CSA mm² (awg)	Resistance (Ohms per km) Cable	Loop	Max. distance m (ft)
1.0 (17)	18.1	36.2	1000 (3280)
1.5 (15)	12.1	24.2	1500 (4920)

Table 2: Maximum cable distances for typical cables

Acceptable cross sectional area of cable is 0.5 to 1.5 mm². Table 2 provides guidance only, actual cable parameters for each application should be used to calculate maximum cable distances.

3.4 Electrical connections (4-20mA use)

All connections are made via the terminal board mounted in the base of the junction box (see Diagram 2). The 3 wires from the 96HD are colour coded and should be terminated in the corresponding colour coded terminal (terminals 4,5 & 6). Terminals 1 (0 Vdc), 2 (10-30 Vdc) and 3 (4-20mA signal) are connected to the control equipment. Flamgard Plus is factory set as a 4-20 mA source device unless specified otherwise when ordering (see Section 2 to change configuration). Diagram 3 summarises the electrical connections.

Note: The junction box and cable armour must be earthed at the detector and control panel to limit the effect of radio frequency interference and to maintain electrical safety.

All electrical connections to the optional relays are made via the 6-way terminal block on the terminal board in the base of the junction box (see Diagram 2). The relay contacts are rated 1 A @ 30 Vdc.

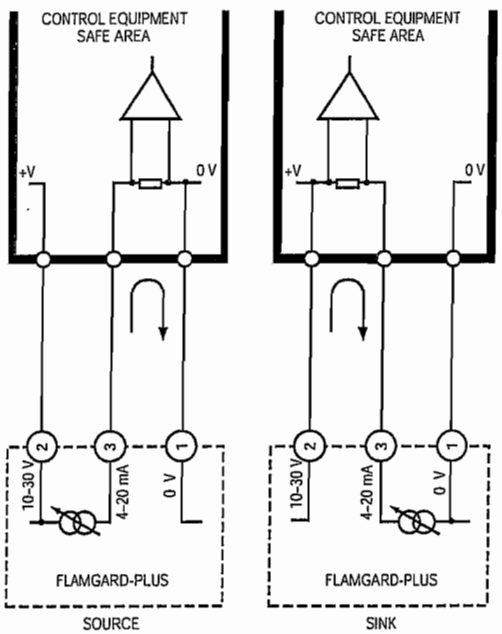

Diagram 3: Electrical connections to Flamgard Plus

4. OPERATION

WARNING

Prior to carrying out any work ensure local regulations and site procedures are followed.

Never attempt to open the detector or junction box when flammable gas is present.

Ensure that the associated control panel is inhibited so as to prevent false alarms.

4.1 Commissioning Procedure

a. Open the junction box of the detector by loosening the tamper proof grub screw and removing the lid by rotating it anti-clockwise.
b. Remove the amplifier and check that all electrical connections have been made and are correct as per Diagram 3.
c. Replace the amplifier and close the junction box ensuring that all screws have been re-fitted correctly.
d. Apply power to the detector. The status LED will show a steady green indicating normal operation.
e. Leave the detector to stabilise for 1-2 hours.

Zeroing the detector (ZERO Mode):

f. Place the end of 'CRO-Mag' over the 'MENU'. Green Status LED will flash. Decimal point above 'ZERO' will illuminate. Display backlight will illuminate. Decimal point above 'INHIBIT' may flash if the option has been internally selected.
g. With no flammable gas present at the detector, place the end of the 'CRO-Mag' key over the 'UP' or 'DOWN' arrow pads to make the display read zero.

Calibrating the detector (CAL mode):

h. Place the end of 'CRO-Mag' over the MENU pad. The decimal point above the word CAL will illuminate. Other indications remain unchanged.
i. Apply calibration gas to the detector at a flow rate of 0.5 litres/min. Crowcon recommend 50% LEL gas for calibration purposes (contact Crowcon for the supply of calibration gas.)
j. Allow the gas reading to stabilise.
k. Place the end of the 'CRO-Mag' over the 'UP' or 'DOWN' arrow pads to make the display read the correct concentration.
l. If the control equipment display requires adjustment consult the operating manual for the equipment.

Returning to normal operation (NORMAL mode):

n. Place the end of 'CRO-Mag' over the 'MENU' pad. All decimal points will disappear and the backlight will turn off. The green status LED will be on steadily (assuming no gas is present at the detector).
o. The detector is now operational.

Note: Always return the detector to NORMAL mode to avoid leaving the detector in a permanently inhibited state.

4.2 Routine Maintenance

The operational life of the pellistor sensor depends on the application for which it is being used. Such a device should work satisfactorily for up to 5 years in ideal conditions. Site practices will dictate the frequency with which detectors are tested. Crowcon recommend that detectors be gas tested at least every 6 months and re-calibrated as necessary. To re-calibrate a detector follow steps given in 4.1.

Pellistors can suffer from loss of sensitivity when there is a presence of poisons or inhibitors such as silicones, sulphides, chlorine, lead or halogenated hydrocarbons. Flamgard Plus uses poison resistant pellistors to maximise operational life. In applications where such compounds are present continuously, we recommend the use of CIRRUS, Crowcon's fixed point infrared flammable gas detector, which is immune to such poisons and inhibitors.

4.3 Sensor Replacement / Servicing of Detectors

WARNING

This work should be carried out by Crowcon or an approved service centre unless suitable training has been received.

Flamgard Plus uses the 96HD sensor housing which allows the user to replace the sensors, gaskets and sinter if necessary. An exploded view of the 96HD sensor housing is given in Diagram 4. The following procedure may be followed when servicing a Flamgard Plus detector.

a. Switch off and isolate power to the detector requiring attention.
b. Open the junction box of the detector by loosening the tamper proof grub screw and removing the lid by rotating it anti-clockwise.

c. Remove the amplifier.
d. Disconnect the 3 sensor wires from the terminal board (terminals 4, 5 & 6).
e. Unscrew the complete 96HD sensor housing from the junction box.

Note: If a spare 96HD sensor housing complete with new sensor is available ignore steps f to k and return the old 96HD to Crowcon or an approved service centre for repair.

f. Open the 96HD sensor housing by removing the four Allen head screws from the Top Cap with a 3mm Allen key.
g. Remove the sensor from the Top Cap PCB. Flammable sensors have an extra black sleeve which may be separate from the sensor. This is normal and the sleeve may be re-used.
h. Fit the replacement sensor checking the part number is correct. This part number is labelled on the main body of the detector.
i. Inspect the gaskets and replace if necessary.
j. The sinter assembly will only need to be replaced if it has become blocked by dust or oil. Such blockage causes the response time of the detector to be slow and may affect sensitivity. To remove the sinter a removal tool (Part # M01614) is required. Loctite No 243 must be used on the sinter assembly threads to maintain certification.

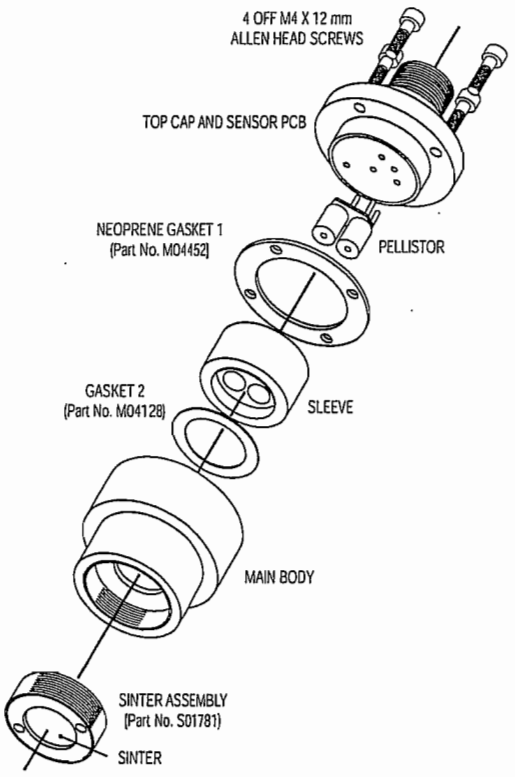

Diagram 4: 96HD assembly

k. Re-assemble the 96HD housing taking time to ensure that the 3 mm Allen head screws are securely fixed into position.
l. Fit the 96HD sensor housing to the junction box ensuring that the colour coded wires are terminated correctly.
m. Replace amplifier ensuring the captive screws are fastened securely.
n. Switch on power.
o. Using a DVM measure the voltage across Test Points 'A' and adjust Set Bridge Volts (Pot A) until the DVM reads correctly (see Table 3 for complete list).
p. Using a DVM measure the voltage across Test Points 'B' and adjust Set Balance (Pot B) until the DVM reads 0 mV.
q. Close the junction box remembering to fasten the tamper proof grub screw into position.
r. Follow the Commissioning Procedure given in 4.1.

Sensor Part no.	Element	Test point 'A' voltage (mV)	Comment
S01-637/A	VQ21T	310	Poison resistant
/B	300P	310	Poison resistant alternative
/C	VQ8	350	Lead resistant
/D	VQ16	350	Early model
/E	VQ22	170	Low power
/F	VQ25	310	For Halogens
/G	VQ41	310	Ammonia or aviation fuel
/H	VQ1	310	Early model

Table 3: Voltages of replacement sensors at test point 'A'

4.4 Changing Alarm Levels (Relay Version Only)

WARNING

This work should be carried out by Crowcon or an approved service centre unless suitable training has been received. Before attempting to change alarm levels ensure the detector is in fresh air and no flammable gas is present.

As standard the AL1 and AL2 alarm levels are factory set at 20% LEL and 40% LEL respectively. To change either alarm level:

a. Switch off and isolate power to the detector requiring attention.
b. Open the junction box of the detector by loosening the tamper proof grub screw and removing the lid by rotating it anti-clockwise.
c. Remove the amplifier from the terminal board
d. Ensure that the 'INHIBIT' link is set to 'N'.
e. Re-fit the amplifier to the terminal board ensuring that all screws have been secured correctly.
f. Apply power to the detector and allow the detector to stabilise.
g. Place the end of 'CRO-Mag' over the 'MENU' pad. The decimal point above the word 'ZERO' will illuminate, the Status LED will flash green and the display backlight will illuminate.
h. With no flammable gas present at the detector, place the end of the 'CRO-Mag' key over the 'UP' or 'DOWN' arrow pads to make the display read the desired alarm level.
i. Using a long instrument screwdriver, turn the relevant ALARM SET pot mounted on the terminal board (see Diagrams 1 & 2) to adjust the alarm level. Tripping of the ALARM 1 level relay is confirmed by the status LED turning a steady red. Tripping of the ALARM 2 level relay is confirmed by the Status LED flashing red.
j. Once the alarm level has been set, place end of 'CRO-Mag' over the 'UP' or 'DOWN' arrow pads and reset the display to read zero.
k. Place the end of the 'CRO-Mag' over the 'MENU' pad to return the detector to normal operation, ie. No decimal points displayed, backlight off and the Status LED indicating steady green.
l. Check that the detector operates correctly by applying test gas as necessary.
m. Switch off and isolate power to the detector.
n. Reset jumpers which may have been changed in step 'd' above.
o. Replace the amplifier and close the junction box, ensuring that all screws have been re-fitted correctly.
p. Apply power to the detector and allow to stabilise before checking correct operation.
q. Re-calibrate if necessary as per section 4.1.

5. SPARE PARTS AND ACCESSORIES

Description	Part number
M20 to 1/2 inch NPT adaptor	M02125
M20 to 3/4 inch NPT adaptor	M02281
Gasket 1	M04452
Gasket 2	M04128
Sinter removal tool	M01614
Collector Cone	C01051
Ceiling Mounting Bracket	M01401
Weatherproof Cap	C01442
Replacement 'CRO-Mag'	C01697
96HD sensor housing complete with sensor	S01749*[1]
Replacement sensor	S01673*[1]
Sinter assembly	S01781
Amplifier	S01865
Terminal board	S01846
Relay board	S01847
Loctite No. 243	Contact Crowcon
Calibration gas	Contact Crowcon

[1] *Flamgard Plus may be fitted with a range of pellistor sensors depending on the specific application. The correct spare sensor part number is itemised on the sensor housing label.*

6. SPECIFICATION

Dimensions	200 x 115 x 115 mm (8" x 4 1/2" x 4 1/2")
Weight	2.2 kg (4.8 lbs)
Material	96HD sensor housing: 316 Stainless steel
	Junction box: Marine grade alloy
Temperature range	-10–55°C (14–131°F)
Humidity range	0–99% RH, non condensing
Ingress protection	IP66 with weatherproof cap
Explosion protection	Flameproof
Approval codes	CENELEC EEx d IIC T6 UL Class 1, Zones 1 & 2, AEx d IIC T6
Standards	EN50014, EN50018, UL2279
Zones	1 and 2
Gas groups	IIA, IIB and IIC
Operating voltage	10–30 Vdc
Operating current	*Relay version:* 210 mA (maximum) ~~*Non relay version:* 160 mA (maximum)~~
Detector output	4–20 mA source or sink selectable
	0 mA = Fault
	2 mA = Inhibit (4 mA option)
	4–20 mA = 0–100% LEL
	24 mA = Over range
~~**Relay outputs**~~	~~2 x Alarm relays SPNO (SPNC option)~~ ~~1 x Fault relay SPNC (SPNO option)~~
~~**Contact rating**~~	~~1 A @ 30 Vdc~~

NOTES

This product has been tested and found to comply with the European Directive on EMC 89/336/EEC

CE
89/336/EEC

Crowcon Detection Instruments Ltd, 2 Blacklands Way, Abingdon Business Park, Abingdon, Oxfordshire OX14 1DY, UK

Tel: +44 (0)1235 553057, Fax: +44 (0)1235 553062, email: sales@crowcon.com, internet: http://www.crowcon.com

TORK ALERT™ SIGNALING DEVICES

INDUSTRIAL WARNING LIGHTS

1/2" Conduit Mounting
(except Model TA96B)

FOR OUTDOOR USE, ALL CONDUIT MOUNTED UNITS MUST BE MOUNTED VERTICALLY WITH BASE AT BOTTOM.

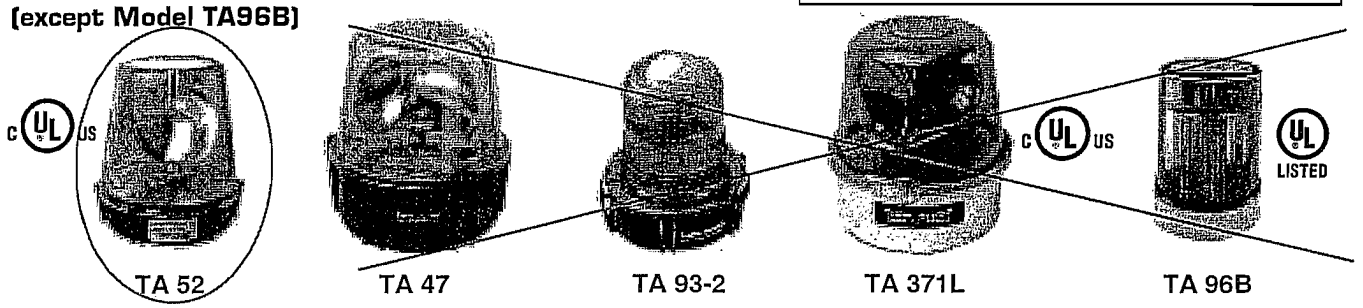

TA 52 TA 47 TA 93-2 TA 371L TA 96B

COMPACT ROTATING BEACON - TA52

Light intensifying reflector rotates around a low current 25 watt bulb. Bayonet socket for easy lamp replacement. Ideal for restricted or danger areas.

FEATURES

- 80-90FPM (flashes per minute)
- 360° rotation.
- Dependable belt and turntable design.
- Acrylic dome.
- Nominal current draw.

Height: 6-1/2" **Diameter:** 5-5/8"

Model	Volts	Amps
TA52*N5 R-red A-amber B-blue G-green C-clear	117VAC	.21

ALL PURPOSE 360° BEACON – TA47

Large parabolic reflector rotates around a 100 watt bulb. Long range beam. Use to indicate equipment malfunctions, security intrusion, etc.

FEATURES

- 90 FPM
- Corrosion resistant for indoor or outdoor use.
- Glass filled polypropylene housing.
- Acrylic dome.
- Tamper resistant dome clamps.
- Nominal current draw.

Height: 9-1/2" **Diameter:** 8-1/2"

Model	Volts	Amps
TA47*N5	117VAC	.9
TA47*R5 R-red A-amber B-blue G-green C-clear	240VAC, 60 Hz	.9

MIDI-STROBE – TA 93-2

Solid-state circuitry in a low profile design. No moving parts for low maintenance.

FEATURES

- 70 - 80 FPM
- Solid state electronic circuitry.
- High output 3-4 watt, 3.6 joules.
- Vertically mounted flash tube with snap out socket base for easy changing.
- Nominal current draw
- 360° fresnel dome optics provide greater illumination.

Height: 6-1/2" **Diameter:** 5-1/2"

Model	Volts	Amps
TA93-2*N5 R-red A-amber B-blue C-clear	117VAC	.04

ROTATING SEALED TWIN BEAMS – TA371L

Heavy duty, two-sealed beam revolving light with 30 watt lamps. Each 35,000 CP bulb provides long range visibility.

FEATURES

- 80-90 FPM
- Quiet belt drive motor.
- Anodized aluminum housing. Polished aluminum base will not tarnish for years.
- No tools needed to relamp.
- Snap lock retaining ring makes changing quick and economical.
- Lexan® dome (acrylic dome in green not UL).
- Nominal current draw.

Height: 9-1/2" **Diameter:** 8-1/2"

Model	Volts	Amps
TA371L*N5 R-red A-amber B-blue G-green C-clear	117VAC	.8

LOW PROFILE STROBE – TA96B

3/4 inch conduit mounting

A compact Xenon strobe unit packed with extra features. Unique lens design gives the appearance of two lamps within each beacon.

FEATURES

- 75 FPM
- Heavy duty metal base.
- One-piece Lexan® lens.
- Gaskets provided on top and bottom of lens

NEMA RATINGS

Type	Application
1	General Purpose
3R	Raintight
12	Oil tight
13	Dust Proof

Height: 4" **Diameter:** 3-1/2"

Model	Volts	Amps
TA96B*N5	120VAC	80mA
TA96B*R5 R-red A-amber B-blue G-green C-clear W-white	240VAC, 60 Hz	110mA

*** For desired lens color, substitute * with first letter of color**

TORK 1 Grove St., Mt. Vernon, NY 10550 • Tel: 914-664-3542 • Fax: 914-664-5052 • Internet: http://www.tork.com

TORK ALERT™ SIGNALING DEVICES

EXPLOSION PROOF

• HORNS • BEACONS

APPLICATIONS

Designed for hazardous areas such as gas plants, petrochemical operations, oil rigs, mines, paint shops, steel mills, textile mills, and grain elevators.

UL LISTED FOR HAZARDOUS ATMOSPHERES - Division 1 & 2		
Class	Group	Contents of Hazardous Atmospheres
I Gases, Vapors	C	Ethylene
	D	Hexane, Butane
II Combustible dusts	E	Metal-Aluminum, Magnesium
	F	Carbon black, coal
	G	Flour, Starch, Grain
III Ignitible fibers		Same as Class II

TA55XN5

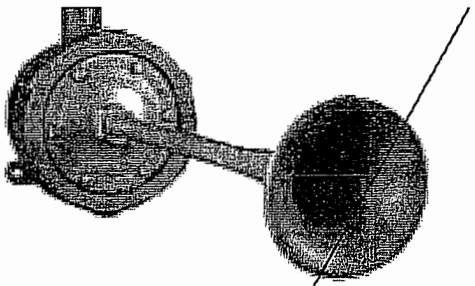

UL LISTED

EXPLOSION PROOF HORNS

FEATURES

110 dB output at 10 feet
Loud and distinctive tone and pitch
Heavy duty metal casing – grey finish
Housing tapped for 3/4 inch conduit

Catalog #	Volts	HZ	AMPS	VA
TA55XN5	120 VAC	60	1.6	192
TA55XG5	24 VAC	60	3.5	84
TA55XG1	24 VDC	–	3.2	75

DIMENSIONS

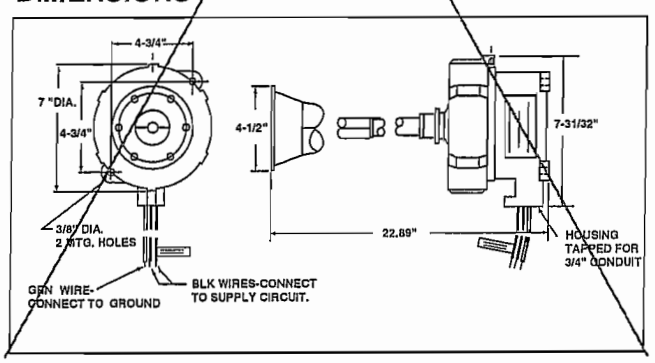

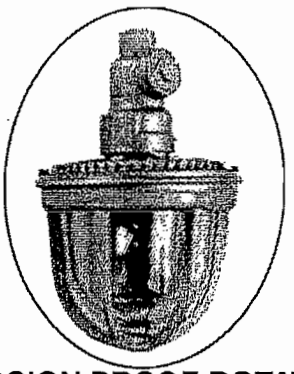

UL LISTED

TA52EX*N5

EXPLOSION PROOF ROTATING BEACON

FEATURES

Operates in any angle position.
Body, base, and lens guard made of cast aluminum alloy.
External glass lens withstands pressure of 380 psi.
Operated by a heavy duty synchronous motor at 60 R.P.M. (A highly reflective parabolic reflector revolves around a 40 watt bulb).

ROTATING BEACON – Available in Amber, Red					
Catalog #	Mounting	Voltage	HZ	Amps	VA
†TA52EX*N5	Pendant	120 VAC	50/60	.36	43.2

* Substitute first letter of desired lens color
† Discontinued when stock is depleted

DIMENSIONS

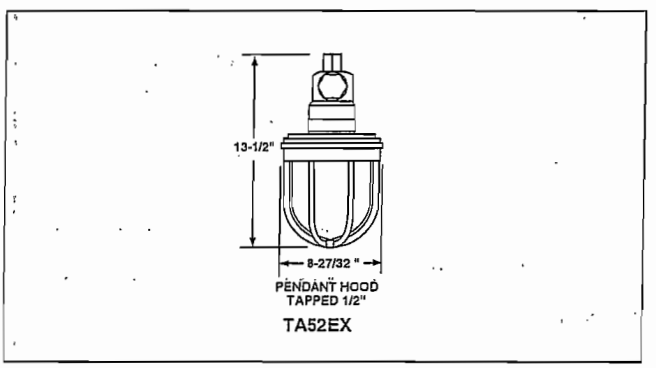

TORK 1 Grove St., Mt. Vernon, NY 10550 • Tel: 914-664-3542 • Fax: 914-664-5052 • Internet: http://www.tork.com

Earth Tech (Canada) Inc.

Reviewed for general conformance with design intent. Responsibility for detailed design in the shop drawings rests with the Contractor.

Responsibility for verification and correlation of field dimensions, fabrication process, techniques of construction, installation and coordination of all parts of the work rests with the Contractor.

REVIEWED ✓

REVIEWED AS MODIFIED

REVISE AND RE-SUBMIT

NOT REVIEWED

Project No. C28/16/79538

Date: 12/9/06 By: M. Joulon

FLYGT FLOAT SWITCH

FLYGT

Technical specification

ENM-10 Level regulator

NOT ACCEPTABLE
PLEASE PROVIDE A
CONDUCTIVITY SWITCH AS
SHOWN ON P&ID.

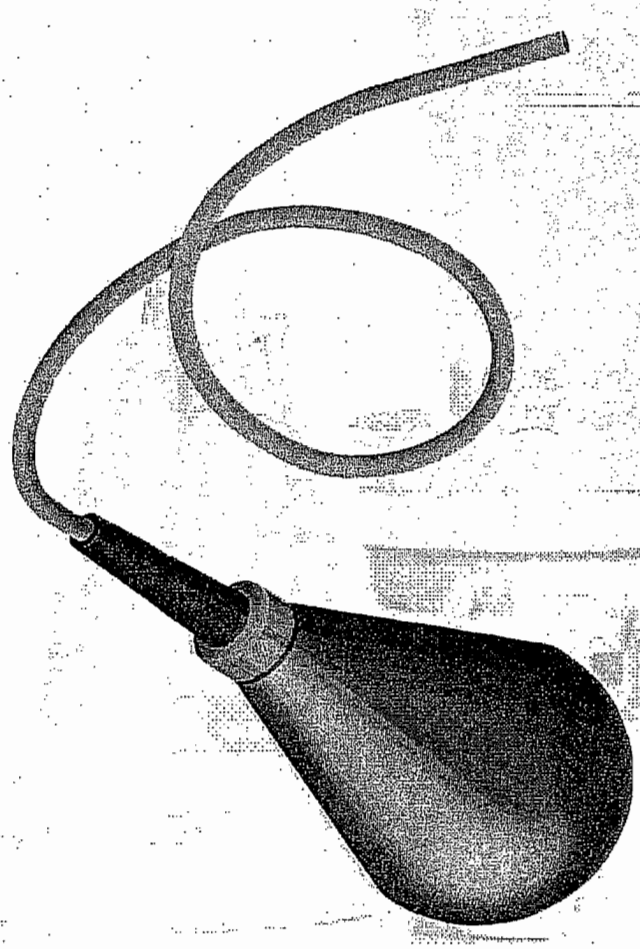

Flygt

ITT Industries

PRODUCT DESCRIPTION

The simplest possible method for level control! A mechanical switch in a plastic casing, freely suspended at the desired height from its own cable. When the liquid level reaches the regulator, the casing will tilt and the mechanical switch will close or break the circuit, thereby starting or stopping a pump or actuating an alarm device. No wear, no maintenance! In sewage pumping stations, for ground water and drainage pumping — in fact, for most level control applications — the ENM-10 is the ideal solution.

The regulator casing is made of polypropylene and the cable is sheathed with a special PVC compound. The plastic components are welded and screwed together. Adhesive is never used. Impurities and deposits will not adhere to the smooth casing.

This level regulator is available in different versions, depending upon the medium in which it is to be used. As standard, the regulator can be obtained with 6, 13, 20, 30 or 50 metres (20, 42, 65, 100 or 167 feet) of cable for liquids with specific density between 0.95 and 1.10 g/cm³; for other specific densities, the regulator is only available with 20 metres (65 ft) of cable. The regulator can withstand up to 60°C (140°F).

Dimensions

For density g/cm³	Regulator length mm (in)	Diameter mm (in)
0.65—0.80	194 (7 10/16)	100 (4)
0.80—0.95	177 (7)	100 (4)
0.95—1.10	162 (6 3/8)	100 (4)
1.05—1.20	142 (5 9/16)	100 (4)
1.20—1.30	133 (5 1/4)	100 (4)
1.30—1.40	130 (5 2/16)	100 (4)
1.40—1.50	126 (5)	100 (4)

Technical data

Liquid temperature:	min. 0°C (32°F) max. 60°C (140°F)
Liquid density:	min. 0.65 g/cm³ max. 1.5 g/cm³
Degree of protection:	IP68, 20 m (65 ft)
Interrupting capacity of micro switch:	AC, resistive load, 250V 10A AC, inductive load, 250V 3A cos φ = 0.5 DC, 30V 5A

Note that local regulations may limit the voltage.

Approvals:	CSA, SEMKO, NEMKO, CE Approved according to EN61058
Weight:	approx. 2 kg (4.5 lb) for a standard density regulator with 20 m cable.

Materials

Body:	polypropylene
Bending relief:	EPDM rubber
Cable:	special compound PVC or chlorinated polyethylene CPE rubber

Colour code

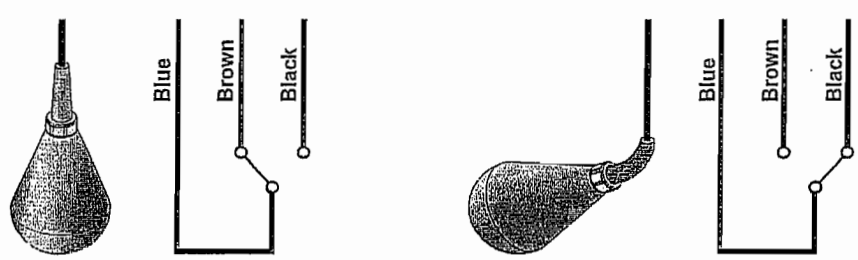

CHEMICAL RESISTANCE LIST

The liquid in which level regulation is practiced most frequently is, of course, water. Of the millions of regulators in use all over the world today, it is estimated that nine out of ten work in water.

However, with a float body of polypropylene, a cable of PVC or CPE and a bending relief of EPDM rubber, the ENM-10 is virtually insensitive to many aggressive liquids.

The table shows how resistant the ENM-10 equipped with either PVC or CPE cable, is to different chemicals at two different temperatures. The classification is broken down into the following categories:

0 = No effect, 1 = Minor to moderate and 2 = Severe effect. The sign — means that information is not available.

Keep in mind also that the density of the liquid determines the bouyancy of the regulator. The ENM-10 is made for seven different densities. See page 2.

Always observe local regulations:
Take particular note of:
- risk of fire/explosion
- hygiene requirements

Acids	PVC cable		CPE cable	
	20°C (68°F)	60°C (140°F)	20°C (68°F)	60°C (140°F)
Acetic Acid 50%	1	2	0	0
Acetic Acid 75%	2	2	0	0
Benzoic Acid	2	2	0	0
Boric Acid 5%	0	—	0	0
Butyric Acid	2	2	2	2
Chromic Acid 10%	0	2	2	2
Citric Acid	0	1	0	0
Hydrobromic Acid 5%	1	2	0	0
Hydrochloric Acid 10%	0	1	0	1
Hydrochloric Acid 37%	1	2	0	2
Hydrocyanic Acid 10%	0	0	1	2
Hydrofluoric Acid 5%	0	2	0	1
Hypochloric Acid	1	2	2	2
Maleic Acid	2	2	2	2
Nitric Acid 5%	1	1	1	1
Nitric Acid 65%	2	2	2	2
Oleic Acid	1	2	2	2
Oxalic Acid 50%	1	1	1	2
Phosphoric Acid 25%	0	0	1	2
Phosphoric Acid 85%	0	0	1	2
Sulphuric Acid 10%	1	2	1	2
Sulphuric Acid 78%	2	2	2	2
Tannic Acid	0	0	0	0
Tartaric Acid	1	1	1	1
Bases				
Ammonium Hydroxide	0	—	0	0
Calcium Hydroxide	0	0	0	0
Potassium Hydroxide	1	2	0	0
Sodium Hydroxide	1	2	0	0

Salts	PVC cable		CPE cable	
	20°C (68°F)	60°C (140°F)	20°C (68°F)	60°C (140°F)
Aluminium Chloride	0	0	0	0
Calcium Sulphate	0	0	0	0
Calcium Chloride	0	0	0	0
Calcium Nitrate	0	0	0	0
Copper Chloride	0	0	0	0
Copper Sulphate	0	0	0	0
Ferric Chloride	0	0	0	0
Ferrous Sulphate	0	0	0	0
Magnesium Chloride	0	0	0	0
Potassium Sulphate	0	0	0	0
Potassium Nitrate	0	0	0	0
Potassium Carbonate	1	1	1	1
Potassium Bicarbonate	0	0	0	0
Sodium Sulphate	0	0	0	0
Sodium Chloride	0	0	0	0
Sodium Nitrate	0	0	0	0
Sodium Bicarbonate	0	0	0	0
Sodium Carbonate	0	0	0	0
Tin Chloride	1	1	1	1
Zinc Sulphate	0	0	0	0
Zinc Chloride	0	0	0	0
Oils				
Castor Oil	1	1	1	1
Cocoanut Oil	0	—	0	2
Corn Oil	2	2	2	2
Diesel Oil	2	2	2	2
Linseed Oil	2	2	2	2
Mineral Oils	2	2	2	2
Olive Oil	1	1	1	1
Silicone Oils	0	0	0	0

Solvents and miscellaneous	PVC cable		CPE cable	
	20°C (68°F)	60°C (140°F)	20°C (68°F)	60°C (140°F)
Aceton	2	2	2	2
Aniline	2	2	1	2
Benzene	2	2	2	2
Butyl Alcohol	2	2	0	1
Carbon Tetrachloride	2	2	2	2
Chlorobenzene	2	2	2	2
Chloroform	2	2	2	2
Ethyl Alcohol	2	2	0	1
Ethyl Ether	2	2	2	2
Ethyl Acetate	2	2	2	2
Ethylene Dichloride	2	2	2	2
Ethylene Chloride	2	2	2	2
Formaldehyde 37%	1	2	0	0
Gasoline	2	2	2	2
Kerosene	2	2	2	2
Methyl Alcohol	2	2	0	0
Methyl Ethyl Ketone	2	2	2	2
Methylene Chloride	2	2	2	2
Nitrobenzene	2	2	2	2
Phenol	2	2	2	2
Toluene	2	2	2	2
Trichlorethylene	2	2	2	2
Turpentine	2	2	2	2
Xylene	2	2	2	2
Gases				
Carbon Dioxide	0	0	0	0
Carbon Monoxide	0	0	0	0
Chlorine (wet)	2	2	2	2
Hydrogen Sulphide	0	0	1	1
Sulphur Dioxide (wet)	1	1	2	2

0 = No effect, 1 = Minor to moderate, 2 = Severe effect. — = No information available.

Wiring alternative

To conform to local regulations, the level regulators are normally connected through a transformer to a low-tension control circuit. Two regu-lators are used — one for starting and one for stopping. A third regulator can be connected if an alarm is required at a given level. Identical regulators can be used for all functions.

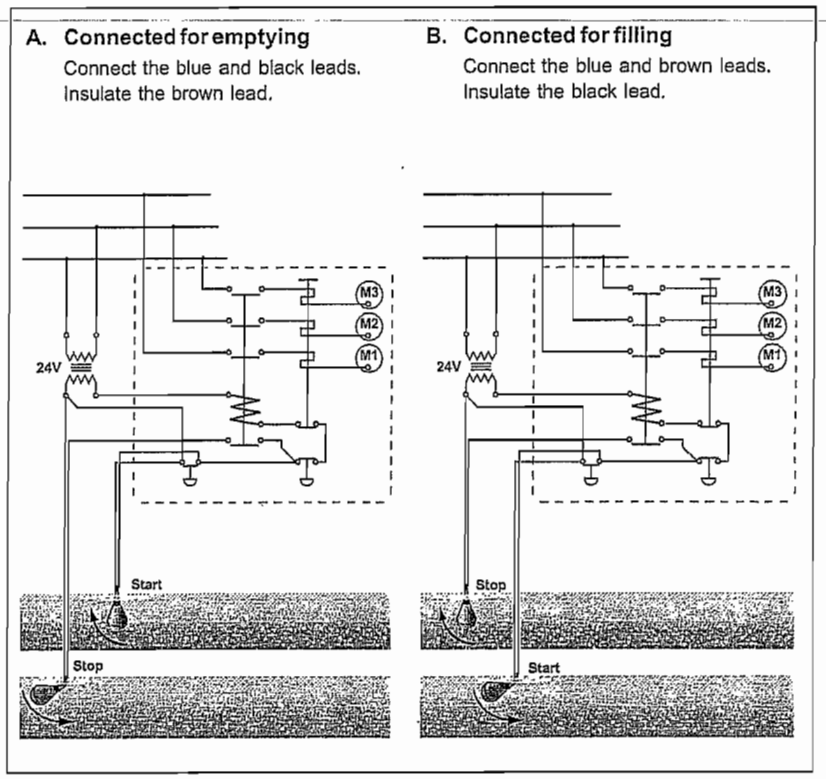

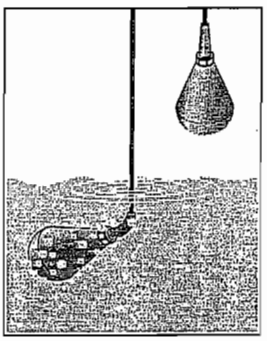

Let the level drop . . .

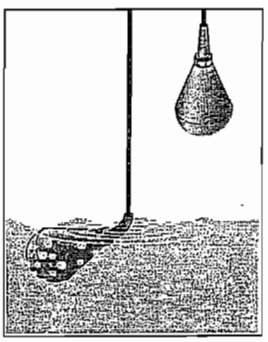

. . . to the lowest permissible point.

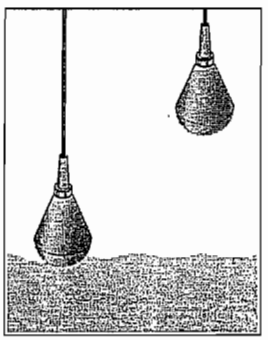

The regulator will then react . . .

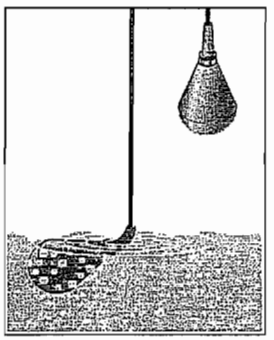

. . . so the process is reversed.

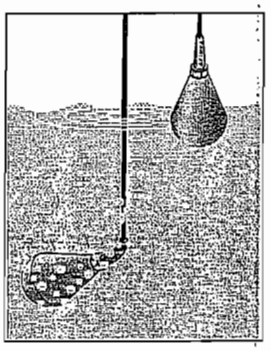

At the highest permissible point . . .

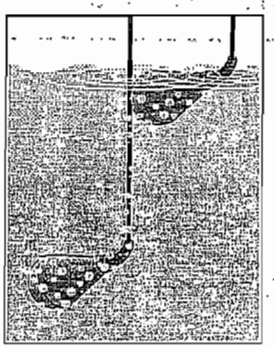

. . . level regulator II reacts . . .

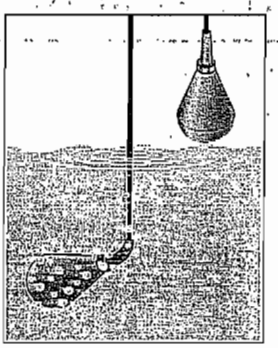

. . . in the opposite fashion.

The manufacturers reserve the right to alter performance specification or design without notice.

FLYGT

www.flygt.com

ENM-10.04.07. Eng. 2M. 11.03 © ITT FLYGT AB 891480

Earth Tech (Canada) Inc.

Reviewed for general conformance with design intent. Responsibility for detailed design in the shop drawings rests with the Contractor.

Responsibility for verification and correlation of field dimensions, fabrication process, techniques of construction, installation and coordination of all parts of the work rests with the Contractor.

REVIEWED _____

REVIEWED AS MODIFIED _____

REVISE AND RE-SUBMIT _____

NOT REVIEWED ✓

Project No. C28/16/79538

Date: 12/9/06 By: [illegible]

ABB TEMPERATURE TRANSMITTER

SensyTemp Quick

Resistance thermometers for the use in pipes, airducts and processing apparatus

10/10-3.75 EN

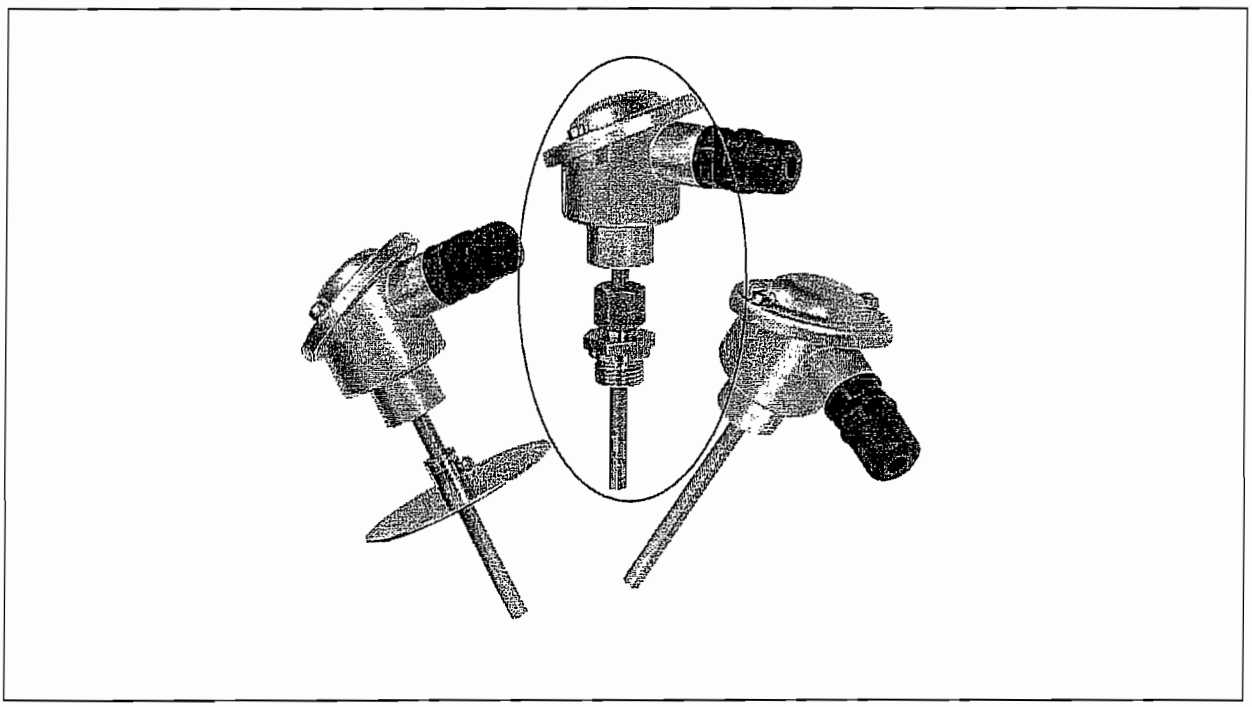

Essential components

- Rapid connection technology
- Connection head type B
- Optional head transmitter
- Tough protection tube design
- Adjust. compression fitting respectively sheet-metal flange

Technical features

- High vibration resistance because of tough construction
- Fast response
- Connection head with degree of protection IP 67
- Transmitter EMC to NAMUR recommendation NE 21
- automatically pull relief

Applications

- Chemical industry
- Food and beverage industry
- HVAC
- Machinery industry

Description

The resistance thermometer SensyTemp Quick, is excellent for use in pipes, airducts, processing apparatus and reactors.

It has a tough construction and high vibration resistance, a short response time and degree of protection IP 67. For this reasons SensyTemp Quick is excellent under difficult conditions.

One of the main advantages is the rapid connecting system of the SensyTemp Quick. No opening and closing of connection head, no difficult connecting of wires at the terminals and lock of the cable fitting for sealing the connection head is essential. No! Only insertion of the wires into the rapid connecting system, fixing and a reliable connection is established.

You save 6 of the 10 installation steps and more than 50 % of installation time. At the same time you have more reliability and security.

Technical data

Resistance element
1 x Pt 100

Standard tolerance
DIN EN 60751, class B

Circuit type
3-wire circuit

Measuring range
-40...200 °C

Protection tube
Ø 8 x 2 mm,
material 1.4571 (AISI 316-TI)

Process connection
Adjustable compression fitting,
G½", 1/2" NPT thread,
Material: galvanized steel, steel compression ring
Sheet-metal flange, chromised, diameter 90 mm

Nominal length
50, 100, 150, 250, 400 mm

Connection head
Type B, degree of protection IP 67

Cable entry
Rapid connection technology

Response time
Water 4 s (T_{05}, v = 0.4 m/s)
Air 60 s (T_{05}, v = 3 m/s)

Technical data sensor head transmitter

Input
Pt 100 (DIN EN 60751),
3-wire circuit, fixed ranges

Output
4...20 mA, temperature linear

Power supply
U_s = 10.5...30 V DC, polarity safe

Climatic conditions

Ambient temperature
-40...85 °C

Relative humidity
≤ 100 % (condensation possible)

Characteristics at rated conditions[1)]

Measurement deviation (upper-range value)
nominal value 0 °C: ≤ 0.15 % or 0.15 K
nominal value < or > 0 °C: ≤ 0.2 % or 0.2 K

Deviation of linearity
< 0.10 %

Electromagnetic compatibility
according to NAMUR NE 21

CE conform

Measuring range ot the sensor head transmitter
-30...+ 60 °C or
-20...+100 °C or
-40...+150 °C or
0...+200 °C

1) Percentage according to measuring range

Dimensions, wiring diagrams

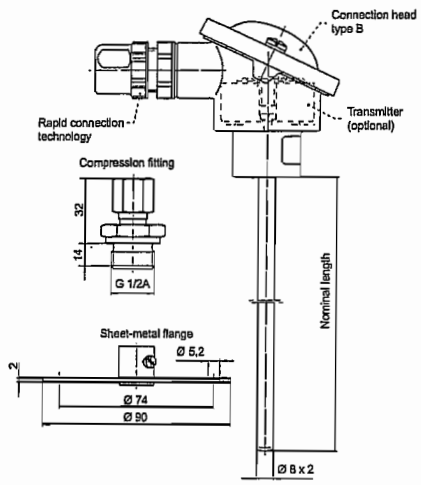

Demands on the conductors which can be used

With the "conductor-device" or "conductor-conductor connection, protection type IP 67 is achieved using HARAX®, if the diameter of the external conductor sheath has the following dimensions:
-5.6 to 8.5 mm for PG 13.5.

The core cross section must be in the range of ≥ 0.75...≤ 1.5 mm², whereby the individual strands must have a diameter of at least 0,2 mm. Conductors with PVC, PUR and PE insulated cores can be used.

Note

Repeated connection with the same contact system is possible up to ten times. When connecting the conductor again, you must make sure that the section of conductor already before is cut off. When using a new conductor, the same core cross section must be used. This procedure ensures that a gas-proof contact point is again created.

The conductor may only be assembled or disassembled in a NO-load condition.

Ordering information

	Catalog No							Code			
SensyTemp Quick	**V10711-**				**1**						
Nominal length											
N = 50 mm		1									
N = 100 mm		2									
N = 150 mm		(3)									
N = 250 mm		4									
N = 400 mm		5									
Process connection											
Without			0								
Sheet-metal flange			1								
Compression fitting G½"[1]			2								
Compression fitting 1/2" NPT[1]			(3)								
Sensor head transmitter											
Without sensor-head transmitter				0							
With sensor-head transmitter measuring range -20...100 °C				(1)							
With sensor-head transmitter measuring range -30... 60 °C				2							
With sensor-head transmitter measuring range -40...150 °C				3							
With sensor-head transmitter measuring range -40...200 °C				4							

[1] not for N = 50 mm

Other versions on request.

Deliv. time: < 100 pieces 1 week
> 100 pieces 2 weeks

Earth Tech (Canada) Inc.

Reviewed for general conformance with design intent. Responsibility for detailed design in the shop drawings rests with the Contractor.

Responsibility for verification and correlation of field dimensions, fabrication process, techniques of construction, installation and coordination of all parts of the work rests with the Contractor.

REVIEWED ✓
REVIEWED AS MODIFIED
REVISE AND RE-SUBMIT
NOT REVIEWED
Project No. C28/16/79538
Date: 12/9/06 By:

FRP STAND

Qty. Two (2) FRP Stands (one for each BrineTank)
C/w 400 mm X 600 mm HDPE board
to accomodate : one (1) Level Transmitter
one (1) Smart Bob Remote Start Unit

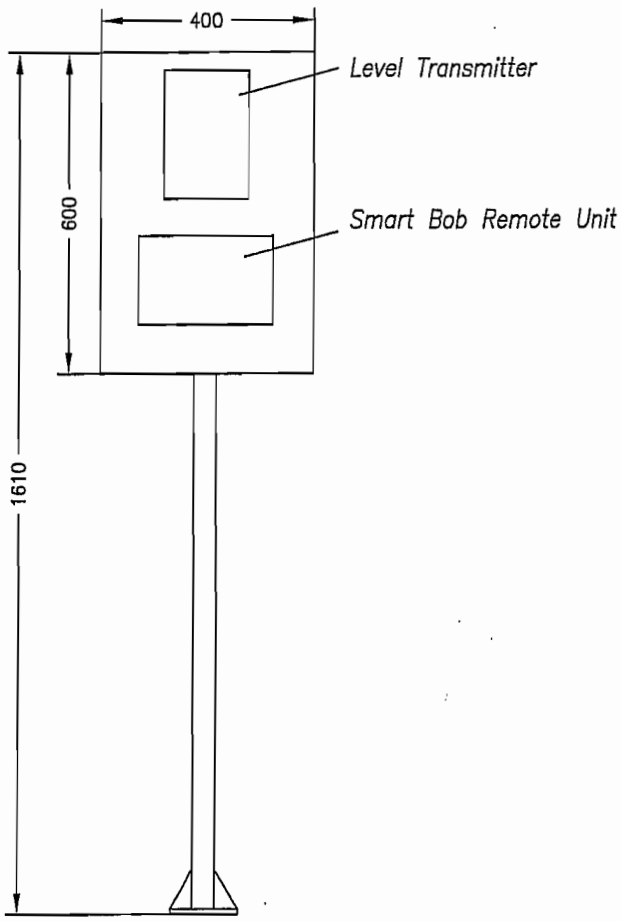

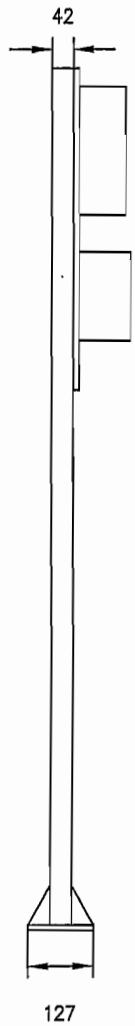

Notes:

1. [*] Indicates supplied by others.
2. Unit: Inches (mm). Do not scale this drawing.
3. the drawing and the information therein are proprietery and confidential of Metcon Sales and Engineering Ltd. and may be used only for authorized purpose.

METCON SALES & ENGINEERING LIMITED				JOB NUMBER	06–E5564	DWG	M–03
				JOB NAME	City of Winnipeg FRP Stand for Brine Tanks Instruments		
DWN	Gabriel	APPVN	AL	DATE	August 16, 2006	REV	

Qty. TFour (4) FRP Stands (one for each Sodium HypochloriteTank)
C/w 400 mm X 600 mm HDPE board
to accomodate : one (1) Level Transmitter
one (1) Junction Box
one (1) Differential Pressure Switch

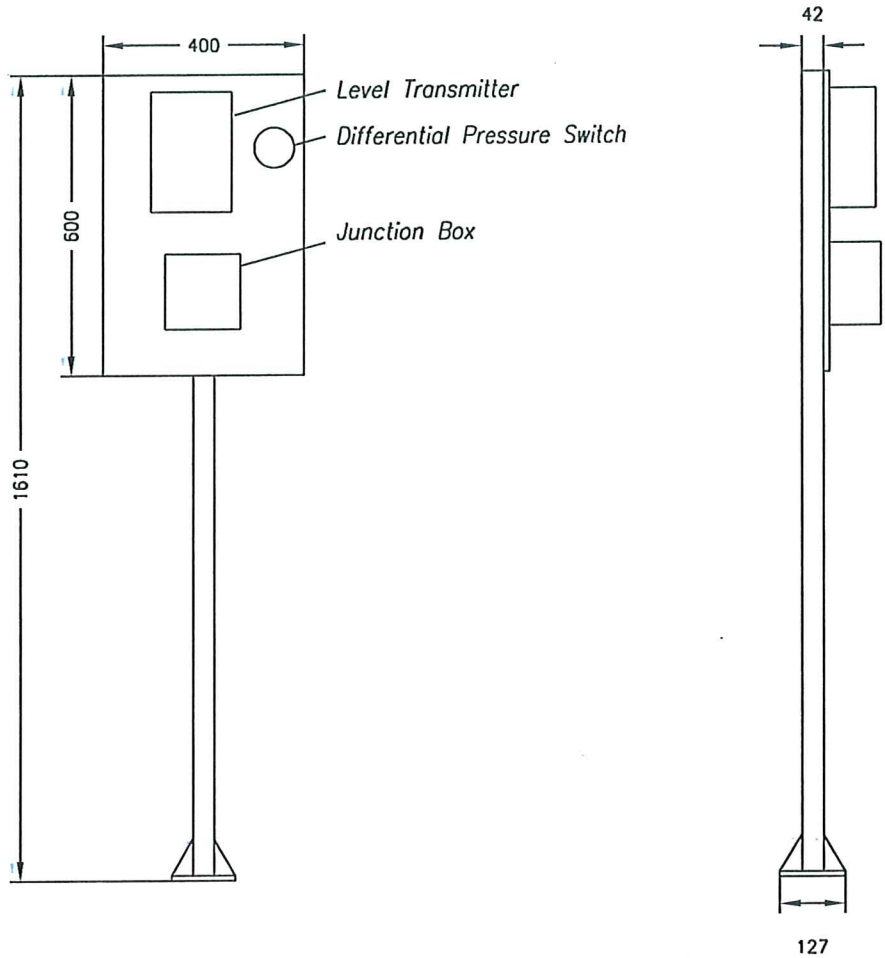

Notes:

1. [*] Indicates supplied by others.
2. Unit: Inches (mm). Do not scale this drawing.
3. the drawing and the information therein are proprietery and confidential of Metcon Sales and Engineering Ltd. and may be used only for authorized purpose.

METCON SALES & ENGINEERING LIMITED				JOB NUMBER	06-E5564	DWG	M-04
				JOB NAME	City of Winnipeg FRP Stand for NaOCl Tanks Instruments		
DWN	Gabriel	APPVN	AL	DATE	January 09, 2007	REV	1

Earth Tech (Canada) Inc.

Reviewed for general conformance with design intent. Responsibility for detailed design in the shop drawings rests with the Contractor.

Responsibility for verification and correlation of field dimensions, fabrication process, techniques of construction, installation and coordination of all parts of the work rests with the Contractor.

REVIEWED _____

REVIEWED AS MODIFIED ✓

REVISE AND RE-SUBMIT _____

NOT REVIEWED _____

Project No. 79538-C28-16

Date: 5/2/07 By: M. Fola

Qty. One (1) FRP Stand for Float Switch

Earth Tech (Canada) Inc.

Reviewed for general conformance with design intent. Responsibility for detailed design in the shop drawings rests with the Contractor.

Responsibility for verification and correlation of field dimensions, fabrication process, techniques of construction, installation and coordination of all parts of the work rests with the Contractor.

REVIEWED _____

REVIEWED AS MODIFIED _____

REVISE AND RE-SUBMIT ✓

NOT REVIEWED _____

Project No. C28/16/79538

Date: 12/9/06 By: [signature]

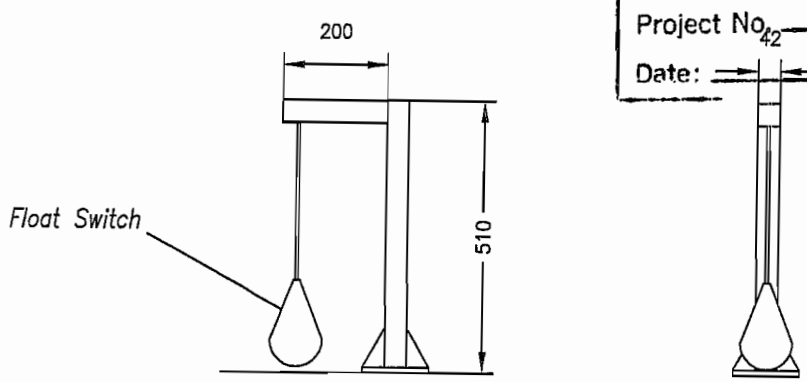

MODIFY TO PROVIDE MOUNTING FOR CONDUCTIVITY SWITCH.

Notes:

1. [*] Indicates supplied by others.
2. Unit: Inches (mm). Do not scale this drawing.
3. the drawing and the information therein are proprietery and confidential of Metcon Sales and Engineering Ltd. and may be used only for authorized purpose.

METCON SALES & ENGINEERING LIMITED				JOB NUMBER	06-E5564	DWG	M-05
				JOB NAME	City of Winnipeg FRP Stand for Float Switch		
DWN	Gabriel	APPVN	AL	DATE	August 16, 2006	REV	

Earth Tech (Canada) Inc.

Reviewed for general conformance with design intent. Responsibility for detailed design in the shop drawings rests with the Contractor.

Responsibility for verification and correlation of field dimensions, fabrication process, techniques of construction, installation and coordination of all parts of the work rests with the Contractor.

REVIEWED ✓

REVIEWED AS MODIFIED

REVISE AND RE-SUBMIT

NOT REVIEWED

Project No. C28/16/79538

Date: 11/9/06 By: N. Poulsen

SEC.13:
SODIUM HYPOCHLORITE DOSING SYSTEM

METCON
SALES & ENGINEERING LIMITED

Project Name: **CITY OF WINNIPEG-ONSITE HYPOCHLORITE GENERATION EQUIPMENT**
Project No: **06-ES5564**
Date: **August 2006**

SUBMITTAL DRAWINGS

Section 13

SODIUM HYPOCHLORITE DOSING SYSTEM

Description & Bill of Materials

PID Drawings

Assembly Drawings

Instrumentation List

Brochures and Catalogue Sheets

- Verderflex Peristaltic Pump
- ABB Motor
- Chemline Ball Valve
- Chemline Y-Strainer
- Chemline Back Pressure / Relief Valve
- Chemline Check Valve
- Chemline Electric Actuators
- Ashcroft Gauge & Chemline Isolator
- Blacoh Pulsation Dampener
- ABB COPA-XE Flowmeter

Prepared by: **Metcon**

SEVERN TRENT SERVICES

Bulk Dilution Procedure

This procedure is written using the attached panel diagram as a reference and assumes the plumbing has been done as laid out in this diagram. Some additional plumbing may be required on the facilities part to be able to test the diluted sample. We suggest a sample port after the ball valve on the effluent side of the dilution panel (#2 on the attached diagram), this will allow for the testing of the concentration of the diluted bleach before the storage tanks.

1. Open the panel outlet valve (#2 on the attached diagram) to the storage tanks.

2. Using the water inlet to the panel; set the inlet softened water flowmeter (#9 on the attached diagram) at 15 gpm.

3. Being sure that the diaphragm valve (#17 on the attached diagram) is completely closed; open the Bulk Hypo inlet valve (#20 on the attached diagram) to the panel.

4. Slowly open the diaphragm valve (#17 on the attached diagram) and adjust so that you have 1 gpm on the Bulk Hypo flowmeter (#15 on the attached diagram).

5. Now that you have set the ratio at 15:1 (15 Liters of water: 1 Liters of Bulk Hypo) allow the process to run 2-3 minutes.

6. Using the graduated cylinder and test kit from your OSGS (On-Site Generation System); draw a sample and test it for the proper concentration.

7. Tweak flowmeters as needed to achieve 0.8%-0.9% concentration

Severn Trent Water Purification, Inc. • 2660 Columbia Street • Torrance, CA 90503 • Tel 310-533-5849
Fax 310-618-1384 • *www.severntrentservices.com*

METCON SALES & ENGINEERING LIMITED
JOB NAME: CITY OF WINNIPEG
JOB NUMBER: 06-ES5564
DATE: JANUARY 09, 2006

SUBMITTAL DRAWINGS
REVISION 2

SODIUM HYPOCHLORITE DOSING SYSTEM

1. SYSTEM DESCRIPTION

1. The Sodium Hypochlorite solution is pumped to each injection point by peristaltic hose-type metering pumps (dwg.# 06-ES5564 M-01)

2. Two sets of two (2) pumps, one duty and one standby, will be provided

3. Required capacity of the peristaltic pumps: 10,500L/hr at 50 psi

4. Each pump c/w 7.5 KW (10HP) motor

5. The peristaltic pumps are suitable to operate 24 hours per day

6. The pumps are floor mounted

7. Each duty/stand-by pumps set will have
   - one chemical outlet
   - one magnetic flowmeter to monitor flow, one per two pumps

8. The peristaltic pumps are able to operate with a 10:1 turn down ratio in conjunction with the VFD's

9. Each pump c/w a variable frequency drive. The VFD's for all pumps will be located in a separate NEMA 4 Metering Pump Control Cabinet

10. Qty. four (4) skids (one per pump) (as per dwg.# 06-ES5564 M-02) containing:
    - Pressure Relief Valve, inlet and outlet pulsation dampeners, check valve and backpressure valve, panel mounted on a freestanding epoxy coated stand,
    - One calibration column per pump mounted on the suction line

11. The Master Control Panel will control the operation and will perform the switchover of the pumps.

The Plant PLC will provide the dosing rate of the onsite hypochlorite feed system based on totalized flow rates through the chlorine contact tank.

12. The weight of each skid with accessories: 500 Kg./each

2. BILL OF MATERIALS:

Qty. Four (4) ***Peristaltic Pumps***

Tags: P-J610A, P-J620A, P-J640A, P-J660A

- Manufacturer:	Prominent
- Model:	Verderflex VF65
- Type :	Peristaltic Pump, Close Coupled

Material of Construction

- Pump Housing:	Cast Iron
- Rotor:	Cast Iron
- Rotor shoes:	Aluminium
- Inserts:	Stainless Steel / PP
- Base Plate:	Carbon Steel

- Size:	1181 mm L x 1000 mm H x 1025 mm D
- Total Weight:	665.3 kg
- Capacity:	10,500 LPH @ 34 RPM
- Capacity per revolution:	5.67 L/rev
- Maximum Speed:	70 rpm
- Maximum power:	11 KW
- Maximum Pressure:	1600 KPa (230 psi)
- Suction/Discharge Ports:	65 mm Flange/ 150# ANSI

Hose:

- Type:	EPDM peristaltic hose
- Color:	Red
- Temperature:	-20 to +100 gr. C
- Pressure:	1600 Kpa (230 psi)
- Internal Diameter:	65 mm
- External Diameter:	101 mm
- Length:	2335 mm
-Weight:	12.5 Kg

- *c/w VerderFlex Hose Burst Detector* - Sends a contact signal when the hose has burst
- *c/w Hose Burst Vent Kit* – allows the pump casing to breathe
- *c/w RPM sensor* - ends a contact output every revolution

- *c/w Gear Reducer*

- Manufacturer:	Nord
- Model:	SK 973 F
- Type:	Helical Speed Reducer
- Frame:	210 TC for a 10 HP Motor
- Output RPM:	36 RPM
- Dimensions:	631 mm L x 449 mm H

- *c/w Carbon Steel Base Plate*

- *c/w Motors*

- Manufacturer:	ABB
- Model:	IPSD
- Type :	Inverter Plus, Severe Duty
- Frame Material:	Cast Iron
- Terminal Box Material:	Cast Iron
- Fan:	Durable non-sparking
- Frame:	215 TC
- Insulation:	Class F
- Size:	489mm L x 317 mm H x 294 mm D
- Total Weight:	71 kg.
- RPM:	1760 RPM
- Power:	575 V, 3 phase, 60 Hz, 10HP
- Approval:	CSA

- Compatible with ABB VFD model ACS800-U1-0016-7

WHATS THE MINIMUM SPEED OF PUMP ?

Qty. Twenty eight (28) ***Ball Isolation Valves***

Tags: HV J610A, HV J610B, HV J610C, HV J610D, HV J610F, HV J610G, HV J610K
HV J620A, HV J620B, HV J620C, HV J620D, HV J620F, HV J620G, HV J620K
HV J640A, HV J640B, HV J640C, HV J640D, HV J640F, HV J640G, HV J640K
HV J660A, HV J660B, HV J660C, HV J660D, HV J660F, HV J660G, HV J660K

- Manufacturer:	Chemline
- Model:	21A020VS
- Type :	Ball valve
- Body Material:	PVC
- Size:	50 mm
- Weight:	1.36 kg (3lb.)
- Length:	209mm
- Seals:	Viton
- Ends:	Socket

Qty. Four (4) ***Ball Isolation Valves***

Tags: HV J610H, HV J620H, HV J640H, HV J660H,

- Manufacturer:	Chemline
- Model:	21A005VS
- Type :	Ball valve
- Body Material:	PVC
- Size:	12 mm
- Weight:	0.167 kg (.37 lb.)
- Length:	113 mm
- Seals:	Viton
- Ends:	Socket

Qty. Four (4) ***Ball Isolation Valves***

Tags: HV J610I, HV J620I, HV J640I, HV J660I,

- Manufacturer:	Chemline
- Model:	21A040VS
- Type :	Ball valve
- Body Material:	PVC
- Size:	100 mm
- Weight:	9.24 kg (20.4 lb.)
- Length:	353 mm
- Seals:	Viton
- Ends:	Socket

Qty. Four (4) ***Y Strainers***

Tags: STR J610A, STR J620A, STR J640A, STR J660A

- Manufacturer:	Chemline
- Model:	YSA020VS
- Type :	Y sediment strainer
- Body Material:	PVC
- Size:	50 mm
- Weight:	1.95 kg (4.3lb.)
- Length:	320mm
- Seals:	Viton
- Ends:	Socket
- Screen:	24 mesh PVC
- Working Pressure:	1035 Kpa (150 psi)
- Working Temperature:	0 to 50 gr. C

Qty. Four (4) ***Back Pressure Valves***

Tags: BPV J610A, BPV J620A, BPV J640A, BPV J660A

- Manufacturer:	Chemline
- Model:	SB11A020VS
- Body Material:	PVC
- Size:	50 mm
- Weight:	5.16 kg (11.4lb.)
- Length:	287mm
- Elastomer:	Viton
- Ends:	Socket

Qty. Four (4) ***Pressure Relief Valves***

Tags: PSV J610A, PSV J620A, PSV J640A, PSV J660A

- Manufacturer:	Chemline
- Model:	SB11A020VS
- Body Material:	PVC
- Size:	50 mm
- Weight:	5.16 kg (11.4lb.)
- Length:	287mm
- Elastomer:	Viton
- Ends:	Socket

Qty. Four (4) ***Check Valves***

Tags: CV J610A, CV J620A, CV J640A, CV J660A

- Manufacturer:	Chemline
- Model:	BTA020VS
- Type :	Ball Check Valve
- Body Material:	PVC
- Size:	50 mm
- Weight:	1 kg (2.2 lb.)
- Length:	173 mm
- Seals:	Viton
- Ends:	Socket
- Working Pressure:	1035 Kpa (150 psi)
- Working Temperature:	0 to 50 gr. C

Qty. Four (4) ***Ball Isolation Valves c/w Electric Actuator***

Tags: FV J610A, FV J620A, FV J640A, FV J660A

Ball Isolation Valves

- Manufacturer:	Chemline
- Model:	21A020VS
- Type :	Ball valve
- Body Material:	PVC
- Size:	50 mm
- Weight:	1.36 kg (3lb.)
- Length:	209mm
- Seals:	Viton
- Ends:	Socket

C/w Electric Actuator

- Manufacturer:	Chemline
- Model:	QB1T020-2LS
- Type :	Reversible Rotory Unit
- Torque:	300 in.lb
- Housing Material:	NEMA 4X Plastic
- Size:	143 mm x 162 mm x 186 mm
- Voltage:	120VAC

- Two extra Limit Switches for Open and Close

- Approvals:	CSA

C/w Local Remote Station

- Manufacturer:	Chemline
- Enclosure:	NEMA 4X Fiberglass

- HAND/OFF/AUTO selector switch
- OPEN/CLOSE selector switch
- Green light for Open
- Red light for Close

- Approvals:	CSA

Qty. Four (4) ***Gauge Isolator + Pressure gauge***

Tags: PI J610A, PI J620A, PI J640A, PI J660A,

Gauge Isolator

- Manufacturer:	Chemline
- Model:	*SIA005005PG*
- Body Material:	PVC
- Inlet Size:	12 mm
- Instrument Connection:	12 mm
- Diaphragm:	Teflon PTFE bonded EPDM
- Working Pressure:	1035 Kpa (150 psi)
- Weight:	0.45 kg (1 lb.)
- Height:	86 mm

c/w Pressure Gauge

- Manufacturer:	Ashcroft
- Model:	45 *1279 AA 04L*
- Tube type:	C-Tube
- Bourdon Tube Material:	Bronze
- Socket Material:	Brass
- Instrument Connection:	12 mm
- Dial Size:	114 mm
- Pressure Range:	0 - 1100 Kpa (0 - 160 psi)
- Liquid-filled:	glycerine
- Accuracy:	+/- 0.5%

Qty. Four (4) ***Calibration Columns***

Tags: CAL J610A, CAL J620A, CAL J640A, CAL J660A

- Manufacturer:	Metcon
- Model:	CAL-50000
- Body Material:	Clear PVC
- Size:	50 L

Qty. Eight (8) ***Pulsation Dampeners***

Tags: PD J610A, PD J610B, PD J620A, PD J620B, PD J640A, PD J640B, PD J660A, PDJ660B,

- Manufacturer:	Blacoh
- Model:	Sentry I C111VF
- Capacity:	6.06 L
- Maximum Pressure:	1000 KPa
- Non Wetted Housing:	PVC
- Bladder:	Viton
- Inlet:	50 mm Flange
- Air Control:	Chargeable
- Height:	610 mm

Qty.Two(2) ***Electromagnetic Flowmeter***

Tags: FE/FIT J610A, FE/FIT J640A

- Manufacturer:	ABB
- Model:	FXE4000
- Type:	Electromagnetic

Element:

- Model:	COPA-XE DE43FFT50HR1ASAA2GD
- Service:	Sodium Hypochlorite 0.8%
- Line Size:	50 mm
- Connection Type:	Flange
- Connection Rating:	150lb.
- Tube Material:	SS
- Connection Material:	Steel
- Lining Material:	PTFE
- Electrodes Material:	Hasteloy C4
- Protection Class:	IP67 (NEMA 6)
- Fluid Temperature:	-25 to +130 gr. C
- Grounding Rings:	Hastelloy C

THIS WILL DEPEND ON WHERE METER IS ON SKID. WE NEED A LAYOUT DRAWING TO APPROVE

Transmitter:

- Mounting:	Integral
- Housing Material:	Aluminium
- Analogue Output:	4-20 mA
- Totalizer Pulse Output:	Yes
- Measuring Range:	0 to 20,000 L/hr
- Max. Flow Range:	0 to 60,000 L/hr (at 10m/sec velocity)
- Power Supply	120 VAC / 60Hz
- Display:	2 x 16 character full graphic display
- Accuracy:	0.5% of range
- Ambient Temperature:	-20 to +60 gr.C
- Protection Class:	IP67 (NEMA 6)
- Total Weight:	10 kg

Qty. Four (4) *Metallic Skids 1100mm L x 730mm W x 2560mm H (dwg.06-ES5564 M-02)*

- Manufacturer:	Aloumac
- Material:	75 mm x 75 mm
- Finishing:	Blue Epoxy Coated

Shipped loose:

Qty. One (1) ***Ball Isolation Valve c/w Electric Actuator***

Tag: FV J665A

Ball Isolation Valve

- Manufacturer:	Chemline
- Model:	21A010VS
- Type:	Ball valve
- Body Material:	PVC
- Size:	25 mm
- Weight:	0.453 kg (1 lb.)
- Length:	146 mm
- Seals:	Viton
- Ends:	Socket

C/w Electric Actuator

- Manufacturer:	Chemline
- Model:	QB1T010-2LS
- Type:	Reversible Rotory Unit
- Torque:	300 in.lb
- Housing Material:	NEMA 4X Plastic
- Size:	143 mm x 162 mm x 186 mm
- Voltage:	120VAC

- Two extra Limit Switches for Open and Close

- Approvals:	CSA

C/w Local Remote Station

- Manufacturer:	Chemline
- Enclosure:	NEMA 4X Fiberglass

- HAND/OFF/AUTO selector switch
- OPEN/CLOSE selector switch
- Green light for Open
- Red light for Close

- Approvals:	CSA

Qty. Three (3) ***Ball Isolation Valves***

Tags: HV J600J, HV J675A, HV J675B

- Manufacturer:	Chemline
- Model:	21A010VS
- Type:	Ball valve
- Body Material:	PVC
- Size:	25 mm
- Weight:	0.453 kg (1 lb.)
- Length:	146 mm
- Seals:	Viton
- Ends:	Socket

3. PUMP SPARE PARTS

Qty. Four (4)	*Peristaltic Hoses*
Qty. Five (5)	*20 L Containers Verderlube lubricant* (each pump requires 25 L of lubricant)
Qty. Four (4)	*Flange Sealing Kits*

REV	DATE	DESCRIPTION	DRAWN BY	CHECKED BY	APPROVED BY
1	12/27/05	ISSUED FOR APPROVAL	CM	JPM	KP
2	4/4/06	REMOVED 5500-435, 5500-265, 5800-509, ADDED 590-012, 5600-942, 590-203.	JB		
3	07/10/08	590-012 CHANGED FOR 5800-197 AND #17 CORRECTED TO 5800-463	DDK	JPM	
4	10/20/08	ADDED EQUIPMENT TAG PER ENGINEER'S COMMENT	CM	JPM	

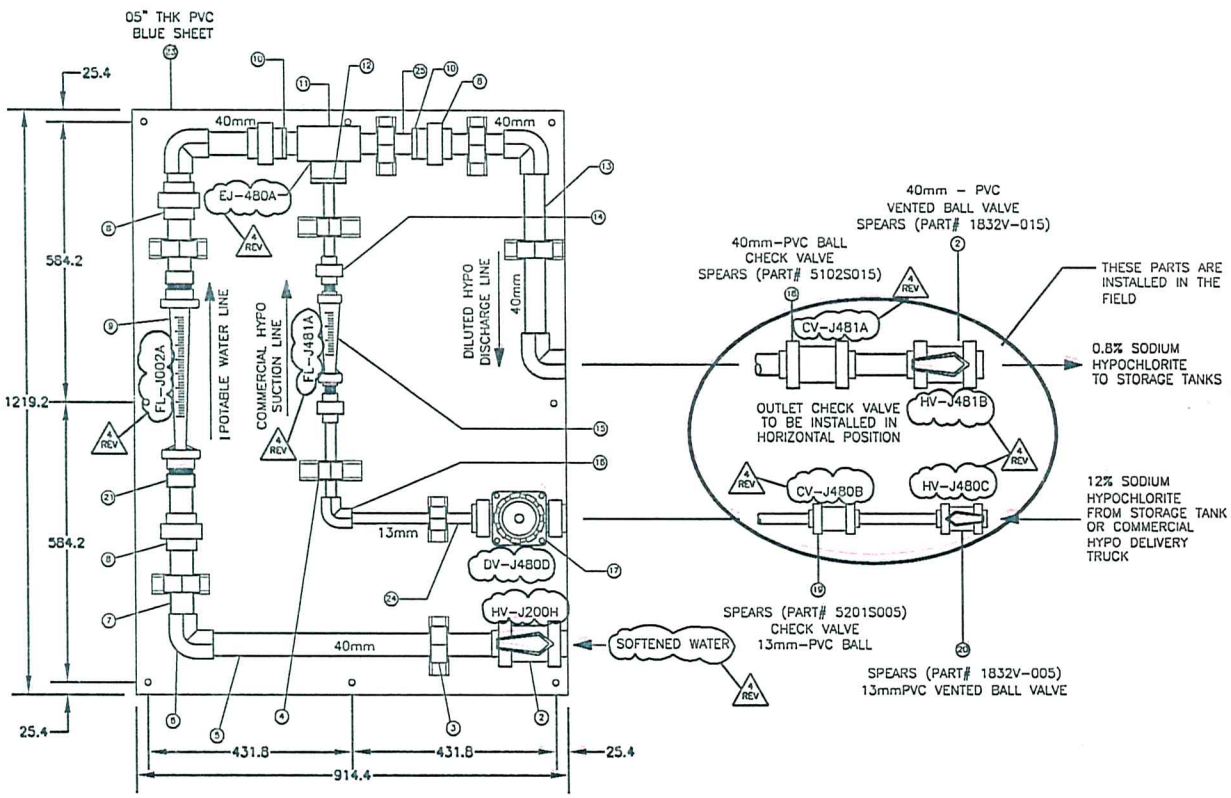

COMMERCIAL HYPOCHLORITE
DILUTION PANEL ASSEMBLY
SCALE: 1 : 10

BILL OF MATERIALS

ITEM	QTY	DESCRIPTION	CLORTEC P/N
1	1	COMMERCIAL HYPO DILUTION PANEL ASSEMBLY (950 GPH)	1015-002
2	2	1-1/2" BALL VALVE, PVC SCH. 80/VITON	5500-438
3	6	1-1/2" PIPE CLAMP	5800-258
4	2	1/2" PIPE CLAMP	5800-317
5	2	PIPE 1-1/2" X 25-3/4", PVC SCH 80	6400-052
6	4	1-1/2" ELBOW 90, SOC X SOC	5900-011
7	6	PIPE 1-1/2" X 7", PVC SCH 80	6400-052
8	4	1-1/2" UNION, SOC, PVC SCH 80	5900-039
9	1	1-1/2" ROTAMETER, W/ HASTELLOY C FLOAT (2.0-20.0 GPM)	8000-021C
10	2	BUSHING, REDUCER, 1-1/2" SPG X 1" SOC	5900-197
11	1	1-1/4" EDUCTOR	5500-442
12	1	BUSHING, REDUCER, 1-1/4" SPG X 1/2" SOC	5600-942
13	1	PIPE 1-1/2" X 15-1/2", PVC SCH 80	6400-052
14	2	UNION, 1/2" SOC X 1/2" THD, PVC, SCH 80, VITON SEAL	5900-298
15	1	1/2" ROTAMETER, W/ HASTELLOY C FLOAT (0.2-2.0 GPM)	5500-439
16	1	1/2" ELBOW 90°, SOC, PVC SCH. 80	5800-015
17	1	1/2" DIAPHRAM VALVE, PVC SCH. 80	5800-463
18	1	1-1/2" CHECK VALVE, PVC SCH. 80	5500-102
19	1	1/2" CHECK VALVE, PVC SCH. 80	8000-014
20	1	1/2" BALL VALVE, PVC SCH. 80/VITON	5500-437
21	2	1-1/2" ADAPTER SOC X THD, PVC SCH 80	5500-440
22	8	1-5/8" X 1-5/8" X 5" UNISTRUT, FIBERGLASS	5903-202
23	1	36" X 48" BLUE SHEET, 0.5" PVC	5902-020
24	3	PIPE 1/2" X 11", PVC SCH 80	6400-049
25	1	PIPE 1-1/4" X 7", PVC SCH 80	6400-047

NOTES:

1. ALL PIPING, FITTINGS AND VALVES ARE PVC SCH. 80.
2. DILUTION RATIO SHOULD BE 15:1.
3. ALL DIMENSIONS ARE IN MM
4. DRY WEIGHT : 30 Kgs.

SEVERN TRENT SERVICES
CLORTEC
2880 COLUMBIA STREET TORRANCE, CALIFORNIA 90503
TELEPHONE No: (310) 618-9700 E-MAIL:
FAX No: (310) 618-1304 WEB SITE: www.severntrentservices.com

UNLESS OTHERWISE NOTED
TOLERANCES:
TYPE: INCHES (MM)
FRACTIONS ± 1/8"
.X ± .1" ± 2.5
.XX ± .02" ± .51
.XXX ± .005" ± .127
ANGLES ± 1°

NOTICE OF CONFIDENTIALITY
THIS DOCUMENT CONTAINS PROPRIETARY INFORMATION THAT IS AND SHALL REMAIN THE PROPERTY OF CLORTEC AND IS TO BE REVIEWED PRIVATELY WITH RECIPIENT. ITS CONTENTS MAY NOT BE REPRODUCED, DISTRIBUTED, CIRCULATED, OR DISCLOSED TO THIRD PARTIES. RECIPIENT SHALL NOT USE THIS INFORMATION FOR PURPOSES OTHER THAN WITHOUT PRIOR WRITTEN CONSENT OF CLORTEC.

BULK HYPOCHLORITE
DILUTION PANEL DETAIL
915mm W X 1219mmH

SCALE:	CLORTEC JOB No:	SIZE:	REV:
NTS		B	4
DWG No: 1015-002		SHEET: 1 OF 1	

Earth Tech (Canada) Inc.

Reviewed for general conformance with design intent. Responsibility for detailed design in the shop drawings rests with the Contractor.

Responsibility for verification and correlation of field dimensions, fabrication process, techniques of construction, installation and coordination of all parts of the work rests with the Contractor.

REVIEWED ✓

REVIEWED AS MODIFIED

REVISE AND RE-SUBMIT

NOT REVIEWED

Project No. 79538-C28-16

Date: 5/2/08 By:

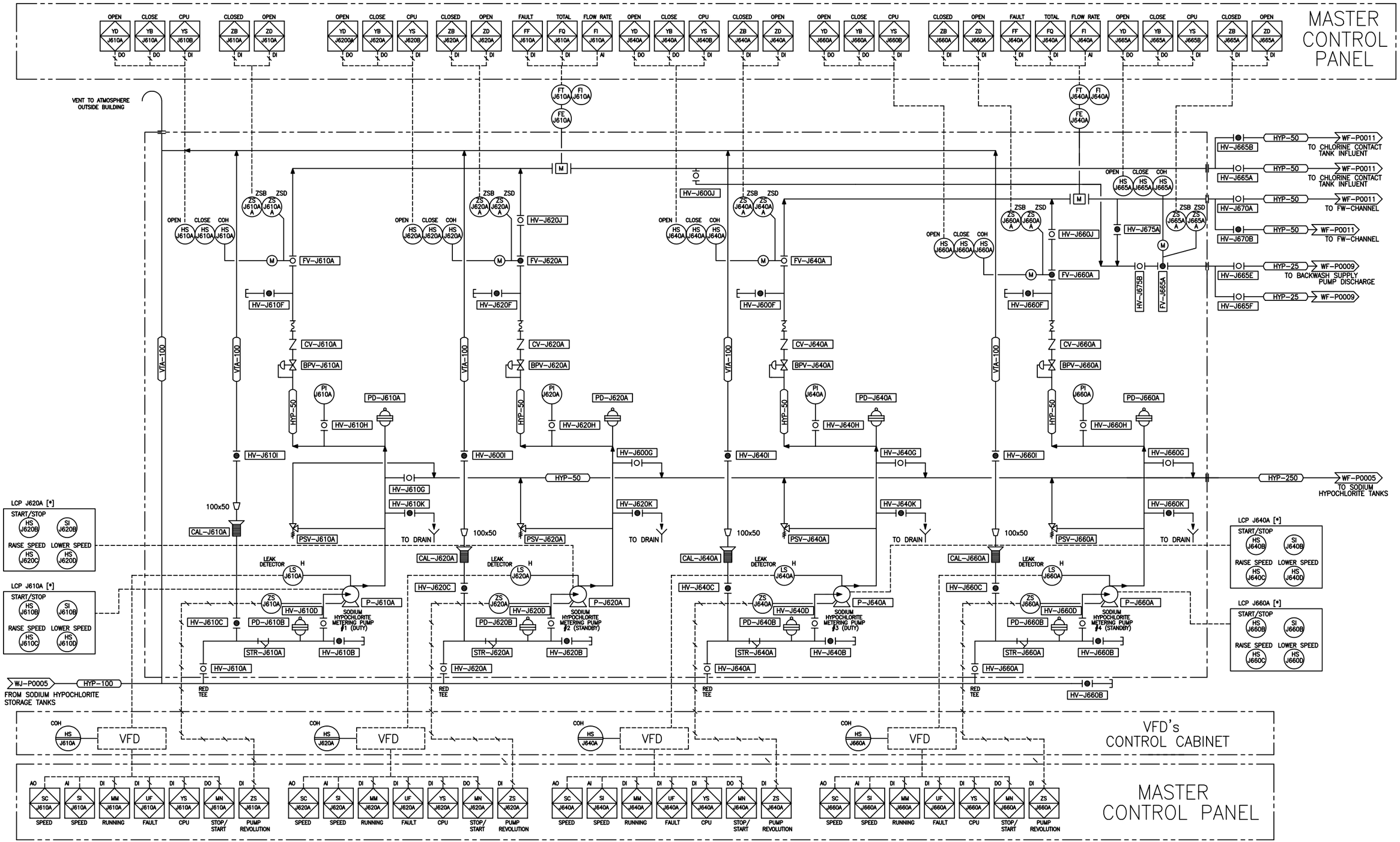

Notes: 1. [●] Indicates supplied by others.

2. Unit: mm [Inch] . Do not scale this drawing. All dimensions, sizing, orientations of piping, wiring and equipment, are estimations and approximations and are not to be used in other related design.

3. The information contained on this drawing is of confidential nature and shall not be used or reproduced without written consent from Metcon Sales and Engineering Limited.

4. The Local Control Panels – Supplied by others

PROPOSAL ONLY
NOT FOR CONSTRUCTION

METCON SALES & ENGINEERING LIMITED

JOB NUMBER	06-ES5564			DWG#	P-01
JOB NAME	City of Winnipeg On-Site Sodium Hypochlorite Generation System Process & Instrumentation Diagram				
DWN	Gabriel	APPVN	AL	DATE	March 20, 2007
REV.	4				

INSTRUMENT IDENTIFICATION TABLE

	FIRST-LETTER	SUCCEEDING-LETTERS	
	MEASURED OR INITIATING VARIABLE	READOUT OR PASSIVE FUNCTION	OUTPUT FUNCTION
A	ANALYSIS (1)	ALARM	
B	BURNER, COMBUSTION	CLOSED	CLOSE
C	CONDUCTIVITY		CONTROL
D	DENSITY	OPEN	OPEN
E	VOLTAGE	SENSOR (PRIMARY ELEMENT)	
F	FLOW RATE	FAILURE	
G	GAS	GLASS, VIEWING DEVICE	
H	HAND	HIGH	
I	CURRENT (ELECTRICAL)	INDICATE	
J	POWER		
K	TIME, TIME SCHEDULE		CONTROL STATION
L	LEVEL	LOW, LIGHT	
M	MOTOR	OPERATING OR ON/OFF	
N	MOISTURE		START
O		OVERLOAD	STOP
P	PRESSURE, VACUUM	POINT (TEST) CONNECTION	
Q	COMMON	QUANTITY	
R	RADIATION	RECORD	
S	SPEED, FREQUENCY		SWITCH
T	TEMPERATURE		TRANSMIT
U	MULTIVARIABLE	MULTIFUNCTION	MULTIFUNCTION
V	VIBRATION, MECHANICAL ANALYSIS (1)		VALVE DAMPER, LOUVER
W	WEIGHT, FORCE	WELL	
X	UNCLASSIFIED	UNCLASSIFIED	UNCLASSIFIED
Y	EVENT, STATE OR PRESENCE (2)		RELAY, COMPUTE, CONVERT (3)
Z	POSITION, DIMENSION		DRIVER, ACTUATOR UNCLASSIFIED FINAL CONTROL ELEMENT

NOTES:

1. IT IS EXPECTED THAT THE TYPE OF ANALYSIS BE DEFINED OUTSIDE THE TAGGING BUBBLE.

2. FIRST LETTER Y IS INTENDED FOR USE WHEN CONTROL OR MONITORING RESPONCES ARE EVENT DRIVEN AS OPPOSED TO TIME OR TIME-SCHEDULE DRIVEN. THE LETTER Y, IN THIS POSITION, CAN ALSO SIGNIFY PRESENCE OR STATE.

3. IT IS EXPECTED THAT THE FUNCTIONS ASSOCIATED WITH THE USE OF SUCCEEDING LETTER Y WILL BE DEFINED OUTSIDE THE TAGGING BUBBLE. THIS DEFINITION NEED NOT BE MADE WHEN THE FUNCTION IS SELF-EVIDENT, AS FOR A SOLINOID VALVE IN A FLUID SIGNAL LINE.

COMMON INSTRUMENT / DEVICE IDENTIFIERS

ISA IDENTIFIER	INITIATING VARIABLE AND FUNCTION	ISA IDENTIFIER	INITIATING VARIABLE AND FUNCTION
AS	ANALYSIS SWITCH	PI	PRESSURE INDICATOR
AE	ANALYSIS ELEMENT	PT	PRESSURE TRANSMITTER
AT	ANALYSIS TRANSMITTER	PIT	PRESSURE INDICATOR TRANSMITTER
CS	CONDUCTIVITY SWITCH	PS	PRESSURE SWITCH
CT	CONDUCTIVITY TRANSMITTER	SC	SPEED CONTROLLER
DS	DENSITY SWITCH	SI	SPEED INDICATOR
ET	VOLTAGE TRANSMITTER	ST	SPEED TRANSMITTER
FC	FLOW CONTROLLER	TC	TEMPERATURE CONTROLLER
FE	FLOW ELEMENT	TE	TEMPERATURE ELEMENT
FI	FLOW INDICATOR	TI	TEMPERATURE INDICATOR
FS	FLOW SWITCH	TS	TEMPERATURE SWITCH
FT	FLOW TRANSMITTER	TT	TEMPERATURE TRANSMITTER
FY	FLOW RELAY	TY	TEMPERATURE RELAY
FZ	FLOW DRIVE	UR	MULTIVARIABLE RECORDER
HS	HAND SWITCH	VT	VIBRATION TRANSMITTER
IT	CURRENT TRANSMITTER	WE	WEIGHT ELEMENT
JT	POWER TRANSMITTER	WT	WEIGHT TRANSMITTER
KC	TIME CONTROLLER	XX	UNCLASSIFIED
KI	ELAPSED TIME INDICATOR	YC	STATE CONTROL
LE	LEVEL ELEMENT	YN	STATE ON
LI	LEVEL INDICATOR	YY	EVENT RELAY
LS	LEVEL SWITCH	YS	EVENT SWITCH
LT	LEVEL TRANSMITTER	ZS	POSITION SWITCH
LY	LEVEL RELAY	ZT	POSITION TRANSMITTER
PC	PRESSURE CONTROLLER	ZZ	POSITION DRIVE

EQUIPMENT IDENTIFICATION AND TAGGING

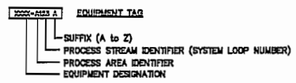

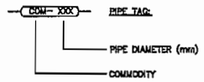

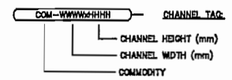

INSTRUMENT SYMBOLS

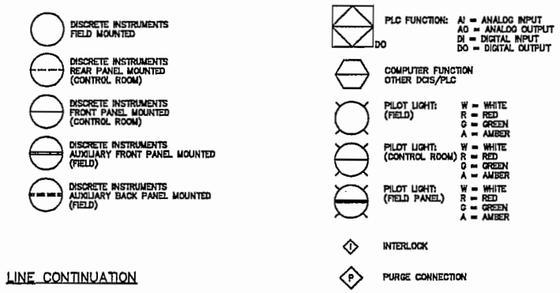

LINE CONTINUATION

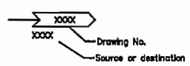

INSTRUMENT DESIGNATION NUMBER

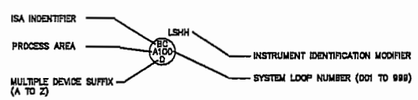

POSITION FORMATS

PROCESS AREA IDENTIFIER		PROCESS STREAM IDENTIFIER (LOOP NUMBER)
CHEMICAL FEED	C	001 – 999
DEACON BOOSTER PUMP STATION	D	001 – 999
FILTRATION	F	001 – 999
PLANT UTILITIES:	H	
AIR PRESSURE		
ELECTRICAL DISTRIBUTION		
EMERGENCY GENERATOR		901 – 950
ELECTRICAL SUBSTATION		951 – 999
HVAC		000 – 100
SITE COMMUNICATION		
FLUSH WATER		
NATURAL GAS		
FIRE PUMPS		100 – 199
AUXILIARY BUILDINGS HVAC		200 – 299
BUILDING SAFETY & SECURITY		300 – 399
PROCESS SUMPS		400 – 499
SANITARY SUMPS		500 – 599
POTABLE WATER		700 – 799
INLET WORKS & RAW WATER	I	001 – 999
FREEZE THAW POND	L	001 – 999
GENERAL SITE SERVICES/ MISCELLANEOUS:	M	001 – 999
YARD PIPING		
YARD LIGHTING		
OZONE	O	001 – 999
FLOCULATION AND DAF	P	001 – 999
RESIDUALS HANDLING	R	001 – 999
BULK CHEMICAL STORAGE	S	001 – 999
TREATED WATER STORAGE & HANDLING (CLEARWELL)	T	001 – 999
ULTRAVIOLET LIGHT DISINFECTION	U	001 – 999
ON-SITE HYPOCHLORITE GENERATION	J	001 – 999

INSTRUMENT IDENTIFICATION MODIFIER

CAH	CONDUCTIVITY ALARM HIGH	LSH	LEVEL SWITCH HIGH
CGH	COMPUTER/OFF/HAND	LSL	LEVEL SWITCH LOW
DO	DISSOLVED OXYGEN	MCC	MOTOR CONTROL CENTRE
D/P	DIFFERENTIAL PRESSURE	O/L	OVERLOAD
FAH	FLOW ALARM HIGH	PAH	PRESSURE ALARM HIGH
FAL	FLOW ALARM LOW	PAL	PRESSURE ALARM LOW
FSH	FLOW SWITCH HIGH	pH	pH
FSL	FLOW SWITCH LOW	PSH	PRESSURE SWITCH HIGH
H/A	HAND / AUTO	PSL	PRESSURE SWITCH LOW
HOA	HAND / OFF / AUTO	RTD	RESISTIVE TEMPERATURE DEVICE
I/I	CURRENT / CURRENT ISOLATOR	S/S	START / STOP
I/P	CURRENT / PRESSURE CONVERTER	SEL	SELECTOR
IAH	CURRENT ALARM HIGH	SOL	SOLENOID
LAH	LEVEL ALARM HIGH	T/C	THERMOCOUPLE
LAL	LEVEL ALARM LOW	TAH	TEMPERATURE ALARM HIGH
		TAL	TEMPERATURE ALARM LOW
		TSH	TEMPERATURE SWITCH HIGH
L/L	LEAD / LAG	TSL	TEMPERATURE SWITCH LOW
LOS	LOCK-OFF-STOP	WDG	WINDING
L/R	LOCAL / REMOTE		

PROCESS LINE CODES

COMMODITY

AA	AQUA AMMONIA	GOX	GASEOUS OXYGEN
AGA	ATOMIZING AIR	HCO	HYDRAULIC OIL
AS	AIR SCOUR (FILTERS)	HFS	HYDROFLUOSILICIC ACID
AHP	AIR HIGH PRESSURE (OZONE)	HP	HYDROGEN PEROXIDE
ALP	AIR LOW PRESSURE (OZONE)	HST	12% HYPOCHLORITE SOLUTION
BS	BRINE SOLUTION	HYP	0.8% HYPOCHLORITE SOLUTION
BWS	BACKWASH SUPPLY WATER	ITA	INSTRUMENT AIR
BWW	BACKWASH WASTE WATER	LGO	LUBRICATING OIL
CA	COMPRESSED AIR (DAF)	LOX	LIQUID OXYGEN
CCW	CIRCULATING COOLING WATER	NG	GAS
CL2	CHLORINE	OF	OVERFLOW
CLG	CHLORINE GAS	OZG	OZONE OFF GAS
CLS	CHLORINE SOLUTION	OZO	OZONATED OXYGEN
CO2	CARBON DIOXIDE	OZW	OZONATED WATER
CRW	CLARIFIER DISCHARGE WATER	PEF	PHOSPHATE FEED
CS	CAUSTIC SODA	PLD	DRY POLYMER
DD	DEACON EFFLUENT (POST UV)	PLS	POLYMER SOLUTION
DDW	DEMINERALIZED WATER	PSW	PLANT SERVICE WATER
DEA	DILUTE ACID	PW	POTABLE WATER
DEC	DILUTE CAUSTIC	RD	ROOF DRAIN
DF	DAF FLOAT	RW	RAW WATER
DFR	DIESEL FUEL RETURN	SAM	SAMPLE
DFS	DIESEL FUEL SUPPLY	SAN	SANITARY DRAINAGE
DO	DISOLVED OXYGEN	SBS	SODIUM BISULPHITE
DRA	DRAINAGE (FLOORS)	SCA	SULPHURIC ACID
DRN	DRAINS, CLEAN DRAINS	SHC	SODIUM HYPOCHLORITE
DS	DEACON SUCTION	SHD	SODIUM HYDROXIDE
DSW	DISTILLED WATER	SPD	SUMP PUMP DISCHARGE
DU	DEACON UV (PRE UV)	STD	DRY SALT
EE	ENGINE EXHAUST	SDR	DAF RECYCLE
FC	FERRIC CHLORIDE	SLO	SEAL OIL
FED	FILTER MEDIA EDUCTER	SLU	SLUDGE
FIN	FILTER INFLUENT	SUP	SUPERNATANT
FPW	FIRE PROTECTION WATER	SWD	STORMWATER DRAINAGE
FTR	FILTER-TO-RECYCLE	SW	SEAL WATER
FW	FILTERED WATER	TRW	TREATED WATER
		TP	TRAP PRIMER
		VA	VACUUM LABORATORY
		VTA	VENT TO ATMOSPHERE
		WS	SOFTENED WATER

PIPE EXPOSURE

BUR	BURIED	SUB	SUBMERGED
EXP	EXPOSED	ENC	CONCRETE ENCASED

PIPE MATERIAL

CISP	CAST IRON SOIL PIPE	PCCP	PRESTRESSED CONCRETE CYLINDER
CLDI	CEMENT LINED DUCTILE IRON	PSTL	PVDF LINED STEEL
CMP	CORRUGATED METAL PIPE	PVC	POLYVINYL CHLORIDE
COP	COPPER	PVDF	POLYVINYLIDENE FLOURIDE
CPVC	CHLORINATED PVC	RCP	REINFORCED CONCRETE PIPE
DI	DUCTILE IRON	RSTL	RUBBER LINED STEEL
FRPX	FIBERGLASS REINFORCED PLASTIC	SST	STAINLESS STEEL
GLDI	GLASS LINED DUCTILE IRON	STL	STEEL
GSP	GALVANISED STEEL PIPE	VC	VITRIFIED CLAY PIPE
HDPE	HIGH DENSITY POLYETHYLENE		

PRESSURE TESTING

H	HYDROSTATIC	P	PNEUMATIC
I	IN SERVICE	NA	NOT APPLICABLE

ABBREVIATIONS

ACK	ACKNOWLEDGE	NO	NORMALLY OPEN
ALM	ALARM	O/A	OUTSIDE AIR
A/M	AUTO/MANUAL	O/C	OPEN/CLOSED
A/S	AIR SUPPLY	ODE	OPPOSITE DRIVE END
BRG	BEARING	PF	POWER FACTOR
CURR	CURRENT	PO	PUMP OUT
DEC	DECREASE	PSD	PLANT SHUTDOWN
DE	DRIVE END	PV	PROCESS VARIABLE
E/A	EXHAUST AIR	PWR	POWER
E/S	ELECTRICAL SUPPLY	RSP	REMOTE SET POINT
ESD	EMERGENCY SHUTDOWN	RST	RESET
FCL	FAIL CLOSE	SP	SAMPLE POINT or SET POINT (Depending on Application)
FOP	FAIL OPEN		
F/R	FORWARD or REVERSE	STN	STATION
HI	HIGH	SPD	SPEED
HP	HORSE POWER (kW)	STDBY	STANDBY
KW	KILOWATT	STP	STOP
HVAC	HEATING/VENTILATION/AIR CONDITIONING	STR	START
INC	INCREASE	STS	STATUS
INJ	INJECTOR	TST	TEST
LO	LOW	TYP	TYPICAL
LOS	LOCAL/OFF/STOP	UV	ULTRA-VIOLET LIGHT
L/R	LOCAL/REMOTE	U/S	UNDER SIDE
MLD	MEGALITERS PER DAY	VAC	VACUUM
NC	NORMALLY CLOSED	VIB	VIBRATION
NLL	NORMALLY LIQUID LEVEL	W/S	WATER SUPPLY
NNF	NORMALLY NO FLOW	WDG	WINDING

EQUIPMENT DESIGNATIONS

ARV	AIR RELEASE VALVE	LJB	LOCAL JUNCTION BOX
ACU	AIR CONDITIONING UNIT	LOP	LUBE OIL PUMP
ACR	ACCESS CARD READER	LV	LEVEL CONTROL VALVE (OPEN/CLOSE)
AD	AIR DRYER	M	MOTOR
AHU	AIR HANDLING UNIT	MAU	MAKE-UP AIR UNIT
ATS	AUTOMATIC TRANSFER SWITCH	MCC	MOTOR CONTROL CENTRE
BAT	BATTERY	MD	MOTION DETECTOR
BB	BASEBOARD HEATER	MDV	MUD VALVE
BFP	BACK FLOW PREVENTER	MP	METERING PUMP
BPV	BACK-PRESSURE VALVE	MXR	MIXER
BKR	BREAKER	OP	ORIFICE PLATE
BLR	BOILER	P	PUMP
BLW	BLOWER	PCT	PARTICLE COUNTER
CAL	CALIBRATION COLUMN	PCU	POLYMER BULK BAG UNLOADER
CC	COOLING COIL	PCV	PRESSURE CONTROL VALVE
CCTV	CLOSED CIRCUIT TELEVISION	PFC	POWER FACTOR CORRECTION
CDR	CONDENSER	PFLT	POWER FILTER (LINE REACTOR, ETC)
CDU	CATALYTIC DESTRUCT UNIT	PNL	PANEL BOARD
CE	CENTRIFUGE	PLC	PROGRAMMABLE LOGIC CONTROLLER
CFR	CHEMICAL FEEDER (POLYMER, CHLORINATOR, ETC.)	PPU	POLYMER PREPARATION UNIT
CHLR	CHILLER	PRV	PRESSURE REGULATING / REDUCING VALVE
CHR	BATTERY CHARGER	PSU	POWER SUPPLY UNIT
CMP	COMPRESSOR	PSV	PRESSURE / VACUUM RELIEF VALVE
CON	CONVEYOR	PV	PRESSURE VESSEL
CP	PLC CONTROL PANEL	RV	RELIEF VALVE / RUPTURE DISC
CPU	COMPUTER	SOL	SOLENOID ACTUATOR
CRN	CRANE OR HOIST	SCRB	SCRUBBER
CTS	CATHODIC TEST STATION	SE	SAMPLER ELEMENT
CV	CHECK VALVE	SF	SUPPLY FAN
DC	DOOR CONTACT	SP	SAMPLE PUMP
DEM	DEMISTER	SLG	SLUICE GATE
DES	DESICCANT DRYER	SLR	SILENCER
DF	DAF SKIMMER	SMP	SUMP PUMP
DIF	DIFFUSER	SPS	SUPERNATANT PUMP STATION
E	ENGINE	STA	STATIC MIXER
EF	EXHAUST FAN	STR	STRAINER
EL	ELECTROLYTIC CELL	SUB	SUBSTATION
EPR	EVAPORATOR	SWGR	SWITCHGEAR
ETM	ELAPSED TIME METER	SWP	SWASH PLATE
ETNK	EXPANSION TANK	T	TRAP
F	FAN	TCV	TEMPERATURE CONTROL VALVE
FAP	FIRE ALARM ANNUNCIATOR PANEL	TNK	TANK (NON-PRESSURIZED)
FC	FLOCCULATION CHAMBER	TOTE	TOTE TANK
FCV	FLOW CONTROL VALVE	TV	TEMPERATURE / VIBRATION MONITOR
FF	FORCE FLOW HEATER	UH	UNIT HEATER ELECTRIC AND NON-ELECTRIC
FG	FLAP GATE	UPS	UNINTERRUPTIBLE POWER SUPPLY
FLC	FLOCCULATOR	UVR	ULTRA-VIOLET LIGHT REACTOR
FLT	FILTER	VFD	VARIABLE FREQUENCY DRIVE
FV	FLOW CONTROL VALVE (OPEN/CLOSE)	VSD	VARIABLE SPEED DRIVE
GF	GAS FILTER	V	VALVE
GEN	GENERATOR	VP	VAPOURIZER
GV	GATE VALVE	WP	WELL PUMP
GP	GLYCOL PUMP	W	WEIR
GT	GRAVITY THICKENER	WRT	WASHWATER RECOVERY TANK
HC	HEAT COIL	WSF	WATER SOFTENER
HEX	HEAT EXCHANGER	XFMR	TRANSFORMER
HWH	HOT WATER HEATER	86	EQUIPMENT LOCKOUT RELAY
HRC	HEAT RECOVERY COIL		
HTR	ELECTRIC HEATER		
HV	HAND VALVE		
HWP	HOT WATER PUMP		
IMP	INSTRUMENT MARSHALLING PANEL		
KP	KEY PAD		
LCP	LOCAL CONTROL PANEL		
LCV	LEVEL CONTROL VALVE		

Notes: 1. [●] Indicates supplied by others.

2. Unit: mm [Inch] . Do not scale this drawing. All dimensions, sizing, orientations of piping, wiring and equipment, are estimations and approximations and are not to be used in other related design.

3. The information contained on this drawing is of confidential nature and shall not be used or reproduced without written consent from Metcon Sales and Engineering Limited.

PROPOSAL ONLY
NOT FOR CONSTRUCTION

METCON SALES & ENGINEERING LIMITED

JOB NUMBER	06-ES5564	DWG#	P-02
JOB NAME	City of Winnipeg On-Site Sodium Hypochlorite Generation System Process & Instrumentation Diagram		
DWN	Gabriel	APPVN	AL
DATE	July. 30, 2006	REV.	

Earth Tech (Canada) Inc.

Reviewed for general conformance with design intent. Responsibility for detailed design in the shop drawings rests with the Contractor.

Responsibility for verification and correlation of field dimensions, fabrication process, techniques of construction, installation and coordination of all parts of the work rests with the Contractor.

REVIEWED ✓

REVIEWED AS MODIFIED

REVISE AND RE-SUBMIT

NOT REVIEWED

Project No. C28/16/79538

Date: 12/9/06 By: M. Fenton

MISCELLANEOUS EQUIPMENT SYMBOLS

- ORIFICE PLATE
- FLANGE
- PIPE REDUCER
- PUMP
- FAN/BLOWER
- PROPELLER OR TURBINE METER
- STRAINER
- DRAIN
- UNION
- TE — TEMPERATURE ELEMENT WITH THERMOWELL
- SCREWED CAP
- FIRE HYDRANT
- HOSE STATION
- ANNUNCIATOR HORN
- GROUND
- C — CORIOLIS MASS FLOWMETER
- FLOAT LEVEL ELEMENT
- FT — FLOW ELEMENT INTEGRAL WITH TRANSMITTER (MASS FLOW, ETC)
- SONIC FLOWMETER (DOPPLER OR TRANSIT TIME)
- EJECTOR
- FILTER
- SILENCER
- GRINDER
- STOP LOG
- LEVEL CONTROL GATE
- FILTER
- M — MAGNETIC FLOW METER ELEMENT
- EXPANSION JOINT
- T — TRAP
- MIX TEE
- DUPLEX STRAINER
- MIXER, INLINE STATIC
- FLOW NOZZLE
- FLOAT
- SINGLE PORT PITOT TUBE
- AVERAGING PITOT TUBE
- SLUICE GATE
- SLIDE GATE
- VARIABLE AREA FLOW INDICATOR (ROTAMETER)
- VORTEX FLOW METER
- GENERATOR
- HEAT EXCHANGER
- FLAME CHECK
- CALIBRATION CHAMBER
- EMERGENCY EYE WASH AND SHOWER
- BOILER
- RECEIVER OR PRESSURE VESSEL
- TANK, DOUBLE WALLED
- TANK
- LIQUID SEPARATOR
- PUMP, SUBMERSIBLE
- PUMP, VERTICAL
- FLOW STRAIGHTENING VANES
- AIR FILTER (HVAC)
- MIXER
- PUMP, DIAPHRAGM
- PUMP, DIAPHRAGM OPERATED
- PUMP, GEAR
- PULSATION DAMPER
- AIR SEPARATOR
- MIXER
- SITE GLASS
- COMPRESSOR ROTARY SCREEN
- FLEXIBLE HOSE
- IN-LINE FLOW METER
- INJECTOR
- M — EQUIPMENT MOTOR
- WEIR
- PUMP, ROTARY LOBE
- PUMP, METERING
- PUMP, PROGRESSIVE CAVITY
- BAR SCREEN, MECHANICAL
- DIFFUSER HEADER
- ENGINE

VALVES

VALVE BODIES

- GATE NO — NORMALLY OPEN GATE VALVE
- GATE NC — NORMALLY CLOSED GATE VALVE
- GLOBE NO — NORMALLY OPEN GLOBE VALVE
- GLOBE NC — NORMALLY CLOSED GLOBE VALVE
- BALL NO — NORMALLY OPEN BALL VALVE
- BALL NC — NORMALLY CLOSED BALL VALVE
- BUTTERFLY — BUTTERFLY
- NEEDLE — NEEDLE
- CHECK — CHECK
- PLUG — PLUG
- KNIFE — KNIFE
- PINCH — PINCH
- BALL CHECK — BALL CHECK
- DBLE L CHECK — DOUBLE LEAF CHECK
- ANGLEVALVE — ANGLE
- ANG PRES RE / GTE PRE RE — ANGLE AND GATE PRESSURE RELIEF VALVE
- IN SAFE — IN-LINE SAFETY
- STOP CHECK
- STP CHK
- SPRING OPERATED CHECK
- SPNG CHECK
- AIR ASSISTED CHECK
- AIR CHK
- COCK VALVE
- COCK V
- DUCKBILL VALVE
- DUCKY
- DIAPHRAGM VALVE
- DIA V
- FLAP VALVE
- FLAP
- FLOAT VALVE
- FLOATIES
- MUD VALVE
- MUD VALVE
- QUICK CONNECT AIR HOSE COUPLING
- QC AIR
- TELESCOPIC VALVE
- BLASTED — BLAST GATE
- SPECTACLE BLIND (OPEN)
- SPECTACLE BLIND (CLOSED)
- UNCLASSIFIED WRITE TYPE OF BODY ADJACENT TO SYMBOL

CONTROL VALVES

- ROTARY BALL VALVE
- CYLINDER-ACTUATED SINGLE-ACTING
- CYLINDER-ACTUATED DOUBLE-ACTING
- PCV — PRESSURE-REDUCING REGULATOR, SELF-CONTAINED
- PCV — PRESSURE-REDUCING REGULATOR, WITH EXTERNAL PRESSURE TAP
- VALVE W B — VALVE WITH BLEED
- PCV — BACKPRESSURE REGULATOR, SELF-CONTAINED
- PCV — BACKPRESSURE REGULATOR, WITH EXTERNAL PRESSURE TAP
- CONE VALVE
- THREE — THREE-WAY VALVE
- 4 WAY — FOUR-WAY VALVE
- AIR RELEASE VALVE

VALVE ACTUATORS/OPERATORS

- HAND OPERATOR
- DIAPHRAGM OPERATOR
- S, SOL, FY — SOLENOID OPERATOR
- M — MOTOR OPERATOR
- PNEUMATIC CYLINDER
- DIAPHRAGM OPERATOR WITH POSITIONER
- DIAPHRAGM OPERATOR WITH POSITIONER FAIL OPEN
- DIAPHRAGM OPERATOR WITH POSITIONER FAIL CLOSE

MISCELLANEOUS

LINE SYMBOLS – PROCESS & INSTRUMENTATION DIAGRAMS

- NEW PROCESS LINES
- EXISTING PROCESS LINES
- ALL OTHER MECHANICAL LINES
- ELECTRIC SIGNAL
- ELECTRICAL BINARY (ON/OFF) SIGNAL
- PNEUMATIC SIGNAL
- PNEUMATIC BINARY SIGNAL
- CAPILLARY TUBING
- HYDRAULIC SIGNAL
- INTERNAL SYSTEM LINK (SOFTWARE OR DATA LINK)
- ELECTROMAGNETIC or SONIC SIGNAL (GUIDED AND NOT GUIDED)
- TELEMETERED SIGNAL
- PACKAGED UNIT
- INSTRUMENT SUPPLY OR CONNECTION TO PROCESS DESIGNATED AS FOLLOWS:
  - AS = AIR SUPPLY
  - ES = ELECTRICAL SUPPLY
  - GS = GAS SUPPLY
  - HS = HYDRAULIC SUPPLY
  - NS = NITROGEN SUPPLY
  - SS = STEAM SUPPLY
  - WS = WATER SUPPLY
- CONTAINMENT

PID STANDARDS

1. DRAWINGS UTILIZE CITY OF WINNIPEG STANDARDS FOR BORDER AND TITLE BLOCK. ALL DRAWINGS ARE PRODUCED ON AUTOCAD (LATEST REV., R2000 OR LATER).
2. ALL UNITS ARE IN METRIC, EXCEPT AS NOTED OTHERWISE. ALL DIMENSIONS SHOWN ARE IN MILLIMETERS (mm).
3. DRAWING CONTENT GENERALLY CONFORMS TO ANSI/ISA STANDARDS S5.1 & S5.3.
4. PID'S INDICATE MAJOR PROCESS PIPING AND EQUIPMENT AND ASSOCIATED LOCAL INSTRUMENTATION, DCS AND OTHER PROCESS I/O.
5. EQUIPMENT INCLUDING VESSELS, DRUMS, EXCHANGERS, HEATERS, PUMPS, COMPRESSORS, ETC. ARE ARRANGED IN SEQUENCE WITH PRINCIPLE FUNCTIONS AND FLOWS.
6. ALL MAJOR EQUIPMENT INCLUDING PUMPS, COMPRESSORS, TANKS, ETC. ARE LABELLED AS TO FUNCTION WITH DESIGN SIZES AND RATINGS.
7. ALL PROCESS LINES ARE LABELLED ACCORDING TO FUNCTION AND SIZE UTILIZING SYSTEM CODES DEFINED HEREIN.
8. EACH SYSTEM INTERCONNECTION POINT BETWEEN DRAWINGS IS LABELLED WITH A SOURCE DRAWING NUMBER OR DESTINATION DRAWING NUMBER. ARROWS ON PROCESS PIPING INDICATE DIRECTION OF FLOW BETWEEN DRAWINGS.

MISCELLANEOUS SYMBOLS

- WATER LEVEL SYMBOL
- ELECTRICAL HEAT TRACING
- FLOW DIRECTION ARROWS
- WALL
- GRADE

Notes: 1. [●] Indicates supplied by others.
2. Unit: mm [Inch] . Do not scale this drawing. All dimensions, sizing, orientations of piping, wiring and equipment, are estimations and approximations and are not to be used in other related design.
3. The information contained on this drawing is of confidential nature and shall not be used or reproduced without written consent from Metcon Sales and Engineering Limited.

PROPOSAL ONLY
NOT FOR CONSTRUCTION

METCON SALES & ENGINEERING LIMITED	JOB NUMBER	06-ES5564	DWG#	P-03	
	JOB NAME	City of Winnipeg On-Site Sodium Hypochlorite Generation System Process & Instrumentation Diagram			
DWN Gabriel	APPVN AL	DATE July. 30, 2006	REV.		

Earth Tech (Canada) Inc.

Reviewed for general conformance with design intent. Responsibility for detailed design in the shop drawings rests with the Contractor.

Responsibility for verification and correlation of field dimensions, fabrication process, techniques of construction, installation and coordination of all parts of the work rests with the Contractor.

REVIEWED ✓

REVIEWED AS MODIFIED

REVISE AND RE-SUBMIT

NOT REVIEWED

Project No. C28/16/74538

Date: 12/9/06 By: [illegible]

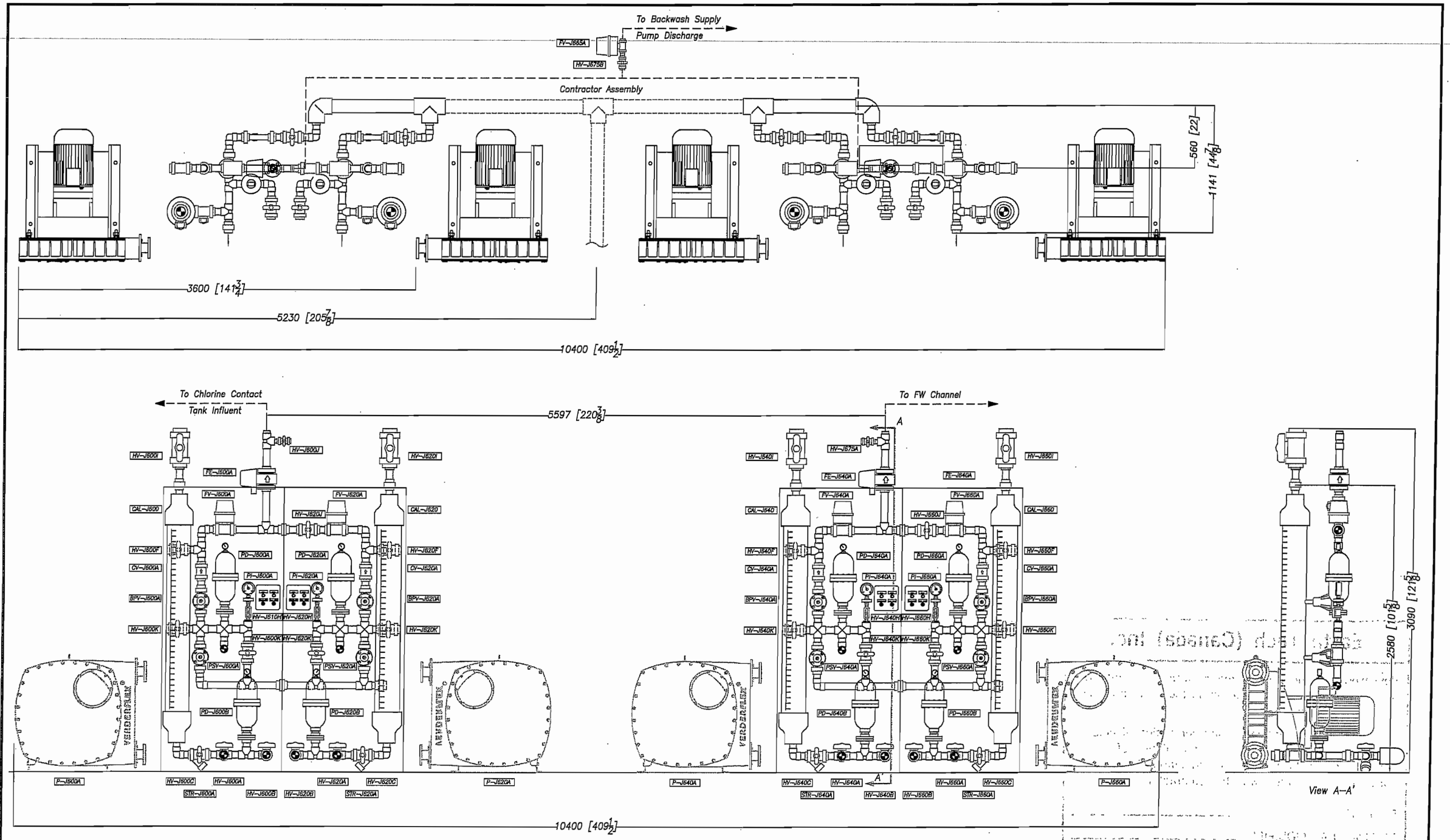

Notes: 1. [●] Indicates supplied by others.
2. Unit: mm [Inch]. Do not scale this drawing. All dimensions, sizing, orientations of piping, wiring and equipment, are estimations and approximations and are not to be used in other related design.
3. The information contained on this drawing is of confidential nature and shall not be used or reproduced without written consent from Metcon Sales and Engineering Limited.

PROPOSAL ONLY
NOT FOR CONSTRUCTION

METCON SALES & ENGINEERING LIMITED	JOB NUMBER	06-ES5564	DWG#	M-01
	JOB NAME	City of Winnipeg Sodium Hypochlorite Feed Pumps		
DWN Gabriel	APPVN AL	DATE August 04, 2006	REV.	

Earth Tech (Canada) Inc.

Reviewed for general conformance with design intent. Responsibility for detailed design in the shop drawings rests with the Contractor.

Responsibility for verification and correlation of field dimensions, fabrication process, techniques of construction, installation and coordination of all parts of the work rests with the Contractor.

REVIEWED ✓

REVIEWED AS MODIFIED

REVISE AND RE-SUBMIT

NOT REVIEWED

Project No. C28/16/79538

Date: 12/9/02 By:

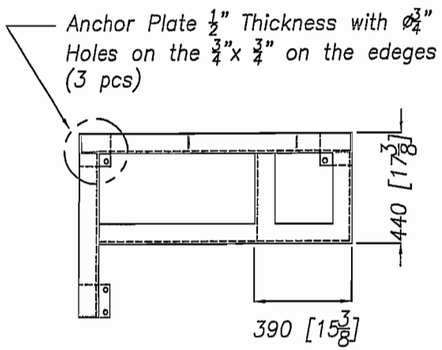

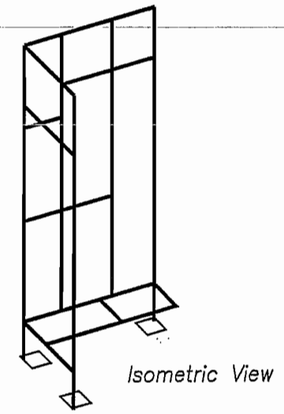

Note:
Qty: 2 Skids (Left-handed)
Dimension: mm [Inches]
Mat'l: 3"x 3" Angle
Finishing: Acrison Blue Expoy coated

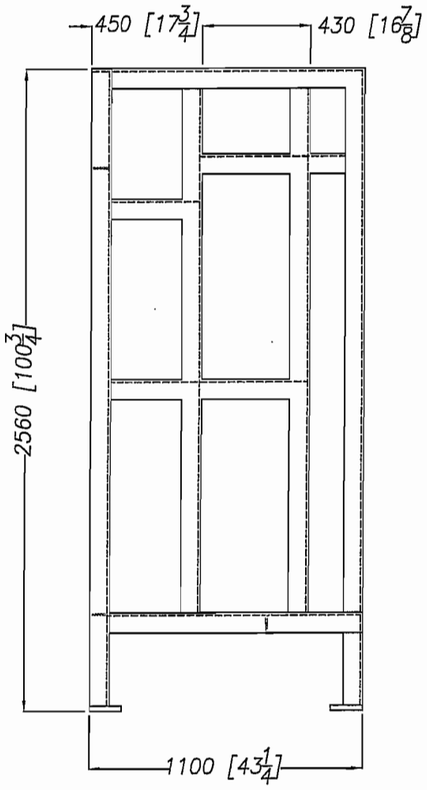

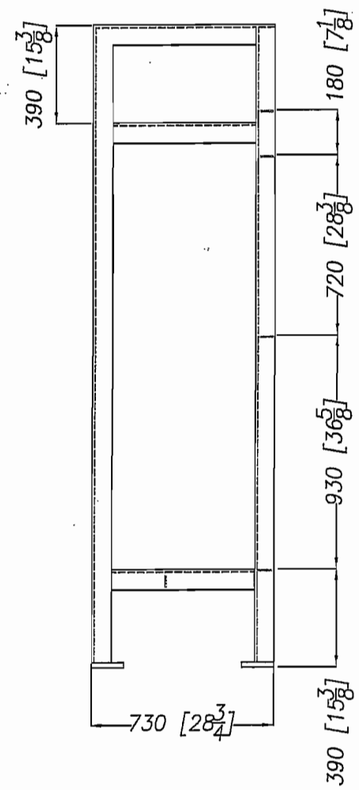

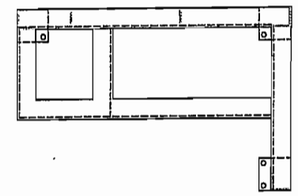

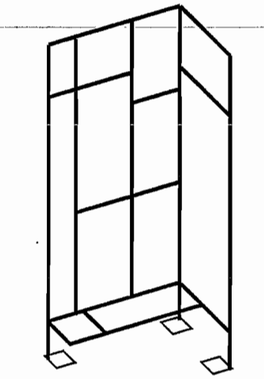

Note:
Qty: 2 Skids (Right-handed)
Dimension: mm [Inches]
Mat'l: 3"x 3" Angle
Finishing: Acrison Blue Expoy coated

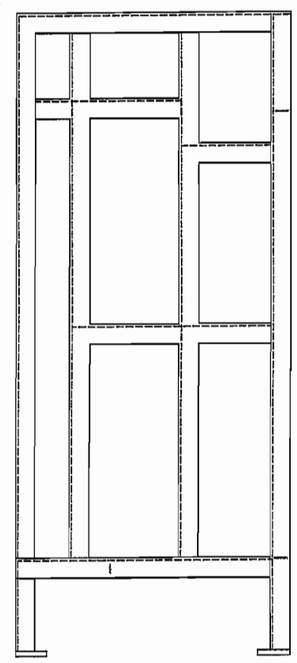

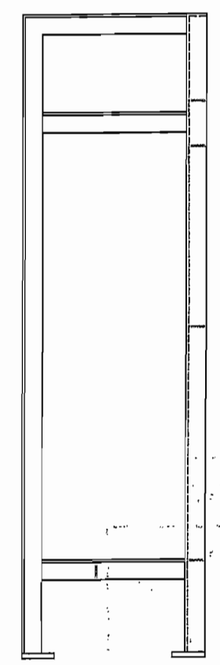

Accessories Parts Req'd:

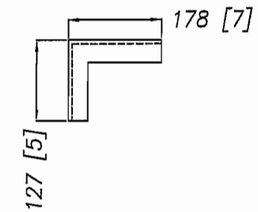

Qty: 28 pcs (Total)
Mat'l: 1-1/2"x1-1/2" Angle
Finishing: Acrison Blue Expoy coated

Notes: 1. [●] Indicates supplied by others.
2. Unit: mm [Inch] . Do not scale this drawing. All dimensions, sizing, orientations of piping, wiring and equipment, are estimations and approximations and are not to be used in other related design.
3. The information contained on this drawing is of confidential nature and shall not be used or reproduced without written consent from Metcon Sales and Engineering Limited.

PROPOSAL ONLY
NOT FOR CONSTRUCTION

METCON SALES & ENGINEERING LIMITED	JOB NUMBER	06-ES5564	DWG#	M-2
	JOB NAME	City of Winnipeg Sodium Hypochlorite Pump Skid		
DWN	APPVN AL	DATE Jul. 24, 2006	REV.	

Earth Tech (Canada) Inc.

Reviewed for general conformance with design intent. Responsibility for detailed design in the shop drawings rests with the Contractor.

Responsibility for verification and correlation of field dimensions, fabrication process, techniques of construction, installation and coordination of all parts of the work rests with the Contractor.

REVIEWED _____

REVIEWED AS MODIFIED _____

REVISE AND RE-SUBMIT _____

NOT REVIEWED _____

Project No. C28/16/79538

Date: 12/9/06 By: [illegible]

NO COMMENT

Metcon Sales & Engineering
PROJECT NAME: CITY OF WINNIPEG
ONSITE HYPOCHLORITE GENERATION EQUIPMENT
Project No.06-ES5564
Date: Aug.2006

SODIUM HYPOCHLORITE DOSING SYSTEM
INSTRUMENTATION LIST

Item	INSTRUMENT TAG No.	ASSOCIATED EQUIPMENT	DESCRIPTION	INSTRUMENT MODEL No.	Size
1	P-J600A	Metering Pump#1 P-J600A	Peristaltic Pumps	Verderflex VF65	10,500L/hr
2	HV-J600A	Metering Pump#1 P-J600A	Ball Isolation Valve	Chemline 21A020VS	50 mm
3	HV-J600B	Metering Pump#1 P-J600A	Ball Isolation Valve	Chemline 21A020VS	50 mm
4	HV-J600C	Metering Pump#1 P-J600A	Ball Isolation Valve	Chemline 21A020VS	50 mm
5	HV-J600D	Metering Pump#1 P-J600A	Ball Isolation Valve	Chemline 21A020VS	50 mm
6	HV-J600F	Metering Pump#1 P-J600A	Ball Isolation Valve	Chemline 21A020VS	50 mm
7	HV-J600G	Metering Pump#1 P-J600A	Ball Isolation Valve	Chemline 21A020VS	50 mm
8	HV-J600I	Metering Pump#1 P-J600A	Ball Isolation Valve	Chemline 21A020VS	100 mm
9	HV-J600K	Metering Pump#1 P-J600A	Ball Isolation Valve	Chemline 21A020VS	50 mm
10	FV-J600A	Metering Pump#1 P-J600A	Actuated Valve	Chemline 21A020VS	50 mm
				Actuator QB1T020-2LS	
11	CV-J600A	Metering Pump#1 P-J600A	Check Valve	Chemline BTA020VS	50 mm
12	STR-J600A	Metering Pump#1 P-J600A	Y-Strainer	Chemline YSA020VS	50 mm
13	PD-J600A	Metering Pump#1 P-J600A	Pulsation Dampener	Blacoh CF111VF	6.06 L
14	PD-J600B	Metering Pump#1 P-J600A	Pulsation Dampener	Blacoh CF111VF	6.06 L
[illegible]	PSV-J600A	Metering Pump#1 P-J600A	Pressure Relief Valve	SB11AA020VS	50 mm
[illegible]	PRV-J600A	Metering Pump#1 P-J600A	Back Pressure Valve	SB11AA020VS	50 mm
17	CAL-J600A	Metering Pump#1 P-J600A	Calibration Column	CAL-50000	50 L
18	PI-J600A	Metering Pump#1 P-J600A	Pressure Gauge	Ashcroft 45 1279	114 mm
19	HV-J600H	Metering Pump#1 P-J600A	Ball Isolation Valve	Chemline 21A005VS	12 mm
20	P-J620A	Metering Pump#2 P-J620A	Peristaltic Pumps	Verderflex VF65	10,500L/hr
21	HV-J620A	Metering Pump#2 P-J620A	Ball Isolation Valve	Chemline 21A020VS	50 mm
22	HV-J620B	Metering Pump#2 P-J620A	Ball Isolation Valve	Chemline 21A020VS	50 mm
23	HV-J620C	Metering Pump#2 P-J620A	Ball Isolation Valve	Chemline 21A020VS	50 mm
24	HV-J620D	Metering Pump#2 P-J620A	Ball Isolation Valve	Chemline 21A020VS	50 mm
25	HV-J620F	Metering Pump#2 P-J620A	Ball Isolation Valve	Chemline 21A020VS	50 mm
26	HV-J620G	Metering Pump#2 P-J620A	Ball Isolation Valve	Chemline 21A020VS	50 mm
27	HV-J620I	Metering Pump#2 P-J620A	Ball Isolation Valve	Chemline 21A020VS	100 mm
28	HV-J620K	Metering Pump#2 P-J620A	Ball Isolation Valve	Chemline 21A020VS	50 mm
29	FV-J620A	Metering Pump#2 P-J620A	Actuated Valve	Chemline 21A020VS	50 mm
				Actuator QB1T020-2LS	
30	CV-J620A	Metering Pump#2 P-J620A	Check Valve	Chemline BTA020VS	50 mm
31	STR-J620A	Metering Pump#2 P-J620A	Y-Strainer	Chemline YSA020VS	50 mm
32	PD-J620A	Metering Pump#2 P-J620A	Pulsation Dampener	Blacoh CF111VF	6.06 L
33	PD-J620B	Metering Pump#2 P-J620A	Pulsation Dampener	Blacoh CF111VF	6.06 L
34	PSV-J620A	Metering Pump#2 P-J620A	Pressure Relief Valve	SB11AA020VS	50 mm
35	PRV-J620A	Metering Pump#2 P-J620A	Back Pressure Valve	SB11AA020VS	50 mm
36	CAL-J620A	Metering Pump#2 P-J620A	Calibration Column	CAL-50000	50 L
37	PI-J620A	Metering Pump#2 P-J620A	Pressure Gauge	Ashcroft 45 1279	114 mm
[illegible]	HV-J620H	Metering Pump#2 P-J620A	Ball Isolation Valve	Chemline 21A005VS	12 mm

Item	INSTRUMENT TAG No.	ASSOCIATED EQUIPMENT	DESCRIPTION	INSTRUMENT MODEL No.	Size
	P-J640A	Metering Pump#3 P-J640A	Peristaltic Pumps	Verderflex VF65	10,500L/hr
	HV-J640A	Metering Pump#3 P-J640A	Ball Isolation Valve	Chemline 21A020VS	50 mm
41	HV-J640B	Metering Pump#3 P-J640A	Ball Isolation Valve	Chemline 21A020VS	50 mm
42	HV-J640C	Metering Pump#3 P-J640A	Ball Isolation Valve	Chemline 21A020VS	50 mm
43	HV-J640D	Metering Pump#3 P-J640A	Ball Isolation Valve	Chemline 21A020VS	50 mm
44	HV-J640F	Metering Pump#3 P-J640A	Ball Isolation Valve	Chemline 21A020VS	50 mm
45	HV-J640G	Metering Pump#3 P-J640A	Ball Isolation Valve	Chemline 21A020VS	50 mm
46	HV-J640I	Metering Pump#3 P-J640A	Ball Isolation Valve	Chemline 21A020VS	100 mm
47	HV-J640K	Metering Pump#3 P-J640A	Ball Isolation Valve	Chemline 21A020VS	50 mm
48	FV-J640A	Metering Pump#3 P-J640A	Actuated Valve	Chemline 21A020VS	50 mm
				Actuator QB1T020-2LS	
49	CV-J640A	Metering Pump#3 P-J640A	Check Valve	Chemline BTA020VS	50 mm
50	STR-J640A	Metering Pump#3 P-J640A	Y-Strainer	Chemline YSA020VS	50 mm
51	PD-J640A	Metering Pump#3 P-J640A	Pulsation Dampener	Blacoh CF111VF	6.06 L
52	PD-J640B	Metering Pump#3 P-J640A	Pulsation Dampener	Blacoh CF111VF	6.06 L
53	PSV-J640A	Metering Pump#3 P-J640A	Pressure Relief Valve	SB11AA020VS	50 mm
54	PRV-J640A	Metering Pump#3 P-J640A	Back Pressure Valve	SB11AA020VS	50 mm
55	CAL-J640A	Metering Pump#3 P-J640A	Calibration Column	CAL-50000	50 L
56	PI-J640A	Metering Pump#3 P-J640A	Pressure Gauge	Ashcroft 45 1279	114 mm
57	HV-J640H	Metering Pump#3 P-J640A	Ball Isolation Valve	Chemline 21A005VS	12 mm
58	P-J660A	Metering Pump#4 P-J660A	Peristaltic Pumps	Verderflex VF65	10,500L/hr
59	HV-J660A	Metering Pump#4 P-J660A	Ball Isolation Valve	Chemline 21A020VS	50 mm
60	HV-J660B	Metering Pump#4 P-J660A	Ball Isolation Valve	Chemline 21A020VS	50 mm
61	HV-J660C	Metering Pump#4 P-J660A	Ball Isolation Valve	Chemline 21A020VS	50 mm
	HV-J660D	Metering Pump#4 P-J660A	Ball Isolation Valve	Chemline 21A020VS	50 mm
63	HV-J660F	Metering Pump#4 P-J660A	Ball Isolation Valve	Chemline 21A020VS	50 mm
64	HV-J660G	Metering Pump#4 P-J660A	Ball Isolation Valve	Chemline 21A020VS	50 mm
65	HV-J660I	Metering Pump#4 P-J660A	Ball Isolation Valve	Chemline 21A020VS	100 mm
66	HV-J660K	Metering Pump#4 P-J660A	Ball Isolation Valve	Chemline 21A020VS	50 mm
67	FV-J660A	Metering Pump#4 P-J660A	Actuated Valve	Chemline 21A020VS	50 mm
				Actuator QB1T020-2LS	
68	CV-J660A	Metering Pump#4 P-J660A	Check Valve	Chemline BTA020VS	50 mm
69	STR-J660A	Metering Pump#4 P-J660A	Y-Strainer	Chemline YSA020VS	50 mm
70	PD-J660A	Metering Pump#4 P-J660A	Pulsation Dampener	Blacoh CF111VF	6.06 L
71	PD-J660B	Metering Pump#4 P-J660A	Pulsation Dampener	Blacoh CF111VF	6.06 L
72	PSV-J660A	Metering Pump#4 P-J660A	Pressure Relief Valve	SB11AA020VS	50 mm
73	PRV-J660A	Metering Pump#4 P-J660A	Back Pressure Valve	SB11AA020VS	50 mm
74	CAL-J660A	Metering Pump#4 P-J660A	Calibration Column	CAL-50000	50 L
75	PI-J660A	Metering Pump#4 P-J660A	Pressure Gauge	Ashcroft 45 1279	114 mm
76	HV-J660H	Metering Pump#4 P-J660A	Ball Isolation Valve	Chemline 21A005VS	12 mm
77	FE/FIT J600A	Metering Pumps P-J600A&P-J620A	Magnetic Flowmeter	ABB FXE4000	50 mm
78	HV-J600J	Metering Pumps P-J600A&P-J620A	Ball Isolation Valve	Chemline 21A010VS	25 mm
79	FE/FIT J640A	Metering Pumps P-J640A&P-J660A	Magnetic Flowmeter	ABB FXE4000	50 mm
80	HV-J675A	Metering Pumps P-J640A&P-J660A	Ball Isolation Valve	Chemline 21A010VS	25 mm
81	HV-J675B	Backwash Supply Pump Discharge	Ball Isolation Valve	Chemline 21A010VS	25 mm
82	FV-J665A	Backwash Supply Pump Discharge	Actuated Valve	Chemline 21A010VS	25 mm
				Actuator QB1T010-2LS	

VERDERFLEX PUMPS

VERDERFLEX®

Industrial hose pumps and hoses

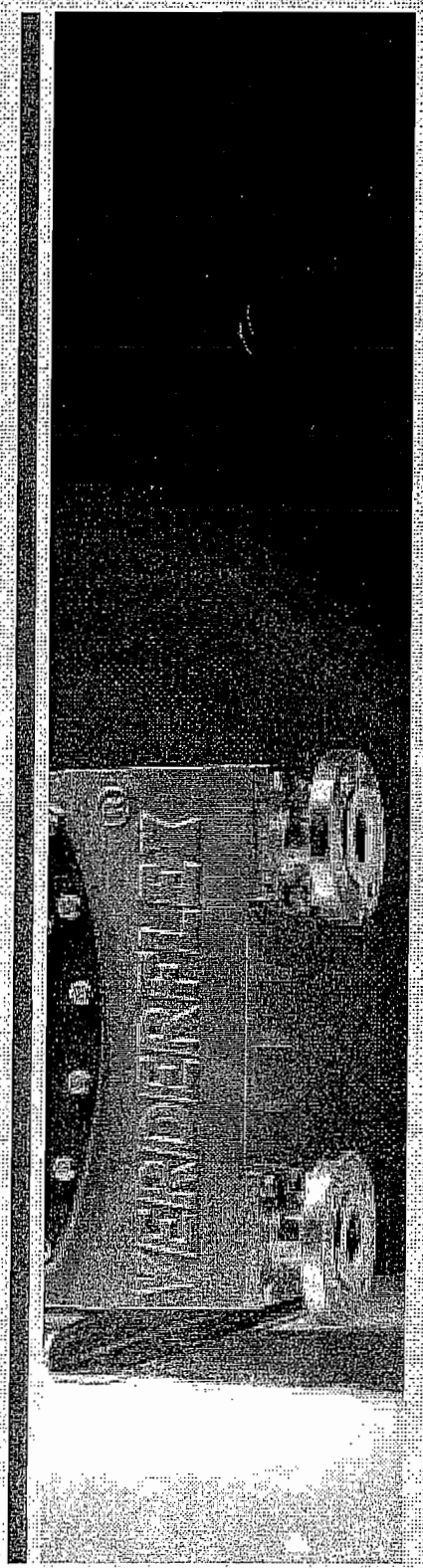

Solutions in Pumping technology

VERDERFLEX Industrial hose pumps

The VERDERFLEX product group consists of a well-balanced high quality range of industrial hose pumps for heavy-duty applications. As with all series of VERDERFLEX pumps, current emphasis is on reduced downtime with minimal maintenance, easy operation and continuous quality improvement. All products are also covered by a two-year warranty on the pumps.

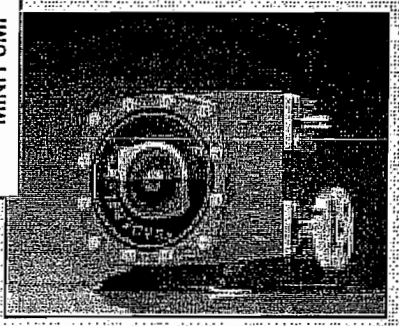

MINI PUMP

Advantages of the VERDERFLEX

- Specially designed hose construction to postpone fatigue, resulting in longer service life of the hose
- Close coupled drive design or robust long coupled option with bearing cartridge
- Rigid pump housing design for heat dispersion and strength
- Simplified hose connection for easier maintenance and disaster proof pump design
- Channels for complete drainage prior to maintenance

VF 25

Working principle

The principle of the peristaltic hose pump is based on alternating contraction and relaxation of the hose forcing the contents through, operating in a similar way to our throat and intestines. A smooth wall, flexible hose is fitted in the pump casing and is rolled and completely squeezed by two shoes on the rotor, inside the pump casing. The rotation action moves the product through the hose at a constant rate of displacement without slip, making the pump suitable for high dosing applications and pressure ratings up to 15 bar/220 PSI.
The hose restitution after the squeeze produces an almost full vacuum that draws the product in the hose, so very viscous liquids are pumped without problems using the VERDERFLEX hose pump. The pump casing is half-filled with a specially designed VERDERLUBE, to lubricate and cool the pump to lengthen service life of the hose. Since the product only comes in contact with the hose and not with any rotating parts, the hose pump is very suitable for abrasive and corrosive applications.

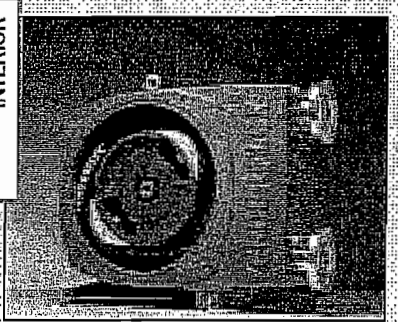

INTERIOR

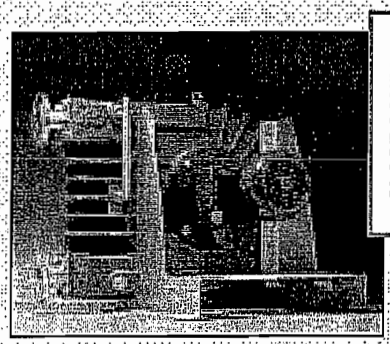

The VERDERFLEX pump range consists of:

Mini pumps:	VF10 and VF15
Small heavy-duty pumps:	VF25, VF32, VF40 and VF50
Medium heavy-duty pumps:	VF65 and VF80
Large heavy-duty pumps:	VF100 and VF125

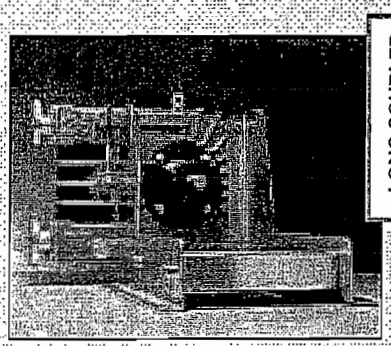

Materials of construction:

Pump housing	Cast iron (aluminum optional for mini pumps)
Rotor	Cast iron (aluminum optional for mini pumps)
Rotor shoes	Aluminum (stainless steel as option)
Inserts	Stainless steel, PP, PVDF
Base plate	Carbon steel
Bearing cartridge	Cast iron with high tensile steel shaft.
Lubricant	Specially designed mixture (silicone-based oil as option)
Hose	NR, NBR and EPDM

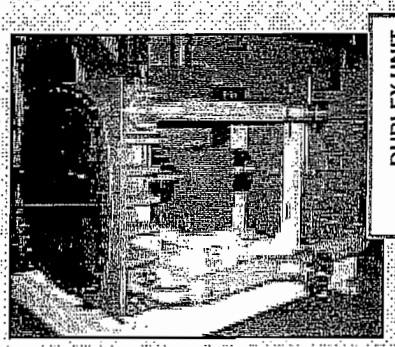

Options

The following options can be supplied with the pump:

- Duplex units to increase flow rate per pump unit and decrease the rate of pulsation
- Aluminum housing and rotor for the mini pumps
- Stainless steel rotor shoes, base plates and fasteners
- Vacuum installation to improve suction capability
- Pulsation dampers
- Hose leakage detector
- DIN, ANSI or JIS flange or hygenic connections
- Customised coatings for pump and/or rotor

Mounting positions

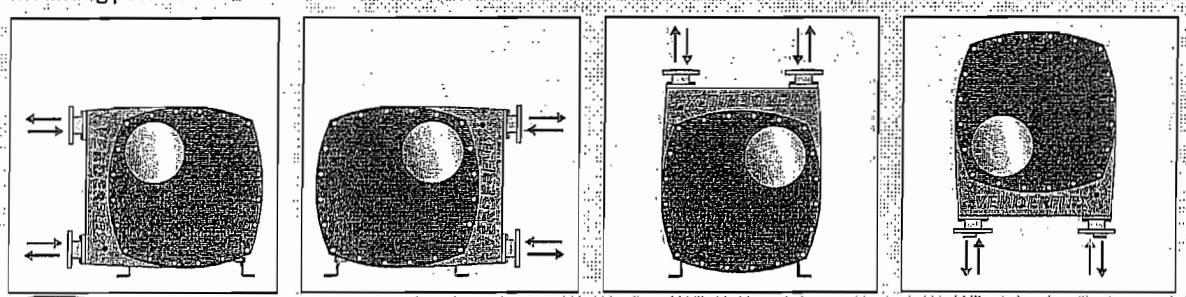

position 1 *position 2* *position 3* *position 4*

Application areas

The VERDERFLEX peristaltic pump design makes the pump unique in its function. This results in a wide range of application areas where excessive demands to the pump system are required, for instance:

- Abrasive and highly corrosive products - abrasion is no limitation for the hose and no seals or rotating parts are in contact with the product.
- Shear sensitive products - the very gentle method of pumping does not damage the product.
- High viscous products - the almost total vacuum of the pumps transports high viscosity liquids.
- Crystallisation products – there are no valves or glands where crystals can build up and clog the pump.
- Dosing applications – absence of product slip in the hose gives a 100% volumetric efficiency.
- High maintenance applications - the hose is the only wearing part and downtime is minimal.
- Self-priming applications - the pump can run dry as the hose is lubricated from outside.
- Products with high concentrated solids - 80% solids can be handled, e.g. in mining applications.
- Potential blockage at suction port - pump can run dry and be reversed to unblock the suction line.
- Explosives - no metal to metal contact in the pump.

Market segments

The large experience within the VERDER group of peristaltic pumps has led to applications in diverse market segments such as:

- Mining industry and mineral processing
- Sewage and industrial wastewater works
- Chemical industry
- Paints and coatings
- Textile industry
- Ceramic industry
- Paper and pulp
- Cosmetics
- Recycling
- Food industry
- Sugar refining
- Abattoirs
- Breweries, wineries and beverages
- Fish industry
- Animal food

BREWERY

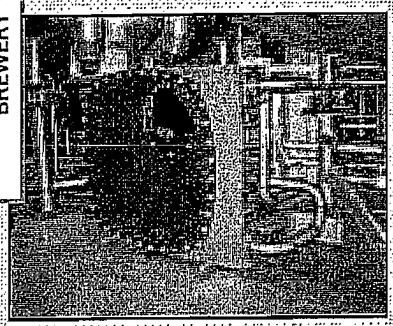

CHEMICAL

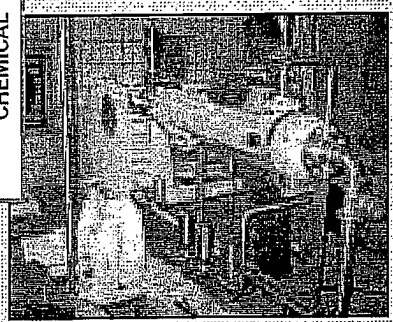

RECYCLING

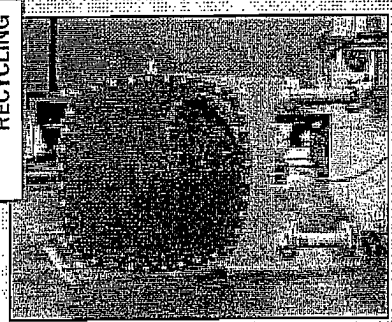

FOOD

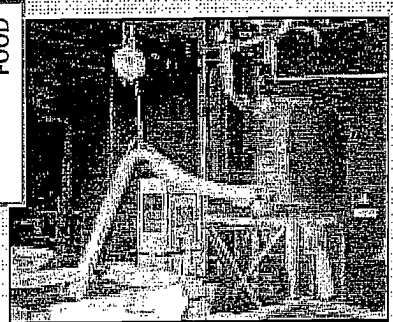

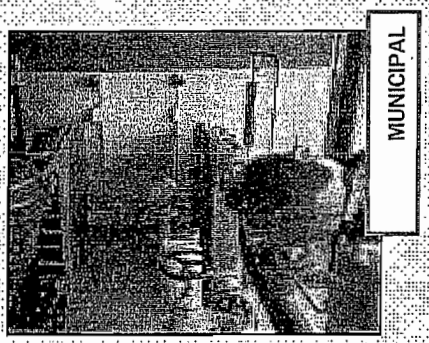

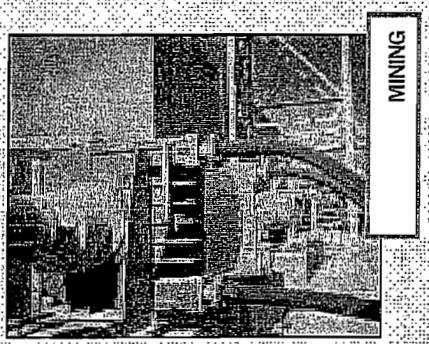

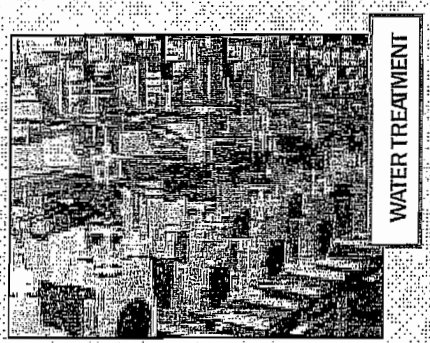

Technical information

mini pumps

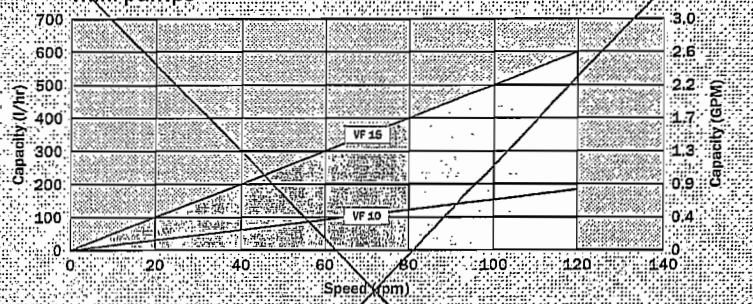

small heavy duty pumps

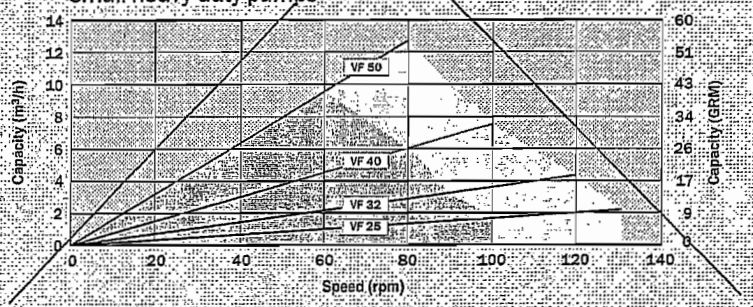

medium and large heavy duty pumps

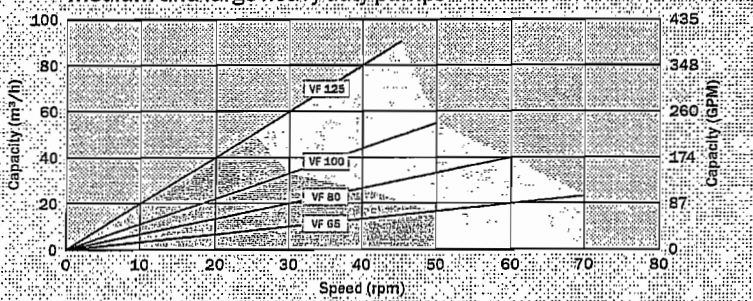

Continuous use | Intermittent use Max. 1 hour running Min. 1 hour stopped

	VF10	VF15	VF25	VF32	VF40	VF50	VF65	VF80	VF100	VF125
displacement										
[l/rev]	0.025	0.083	0.28	0.60	1.25	2.67	5.67	11.1	18.3	32.3
[usg]	0.0066	0.022	0.075	0.159	0.33	0.71	1.5	2.9	4.8	8.8
maximum speed										
[rpm]	120	120	130	120	100	80	70	60	50	45
maximum power										
[kW]	0.25	0.55	2.2	3.0	4.0	5.5	11	15	22	37
[HP]	0.35	0.75	3.0	4.0	5.5	7.5	15	20	30	50
maximum pressure										
[bar]	7.5/16	7.5/16	16	16	16	16	16	16	16	16
[PSI]	110/230	110/230	230	230	230	230	230	230	230	230

The VERDERFLEX hose

The hose is the heart and soul of a peristaltic pump.
The successful use of hose pumps in a number of industrial fields led VERDER to develop a hose with a special construction. Hoses in some peristaltic pumps could fail due to fatigue between the rubber layers and the reinforcement. However, VERDER successfully developed a hose designed to postpone fatigue within its construction, resulting in extremely long service life of the hose.

Internal diameter of the hose and rotor speed determine the flow rate of the pump. Hose wall thickness compared to its diameter and the number of reinforcement layers are responsible for the restoration forces of the hose after compression and creates a virtual vacuum in the hose. The construction of the textile reinforcement allows a discharge pressure of the pump of 16 bar/230 PSI for all pump types.

Surface properties of the hose.
Some industrial hose pumps in today's market have machined exteriors, a process generally employed by others to achieve an equal wall thickness. In comparison, the unique VERDERFLEX production process is so precise that the exact wall thickness tolerance is maintained at each and every point. For this reason VERDERFLEX hoses do not have to undergo this additional process of external machining. Thus when VERDERFLEX hoses are tested alongside their competitors, results indicate that there is no additional friction loss due to the wound surface, but that the VERDERFLEX hose remains homogeneous and has no other surface area liable to contamination. All VERDERFLEX hoses have a coloured lettering on the exterior which indicates the type of hose. The VERDERFLEX lettering is white for a NR hose, in Yellow for a NBR and in red for a EPDM hose type.

New: select your pump on the web
From now on you can select your VERDERFLEX hose pump directly on the internet. At www.verder.com you can make a selection and check chemical resistance tables. Take a look.

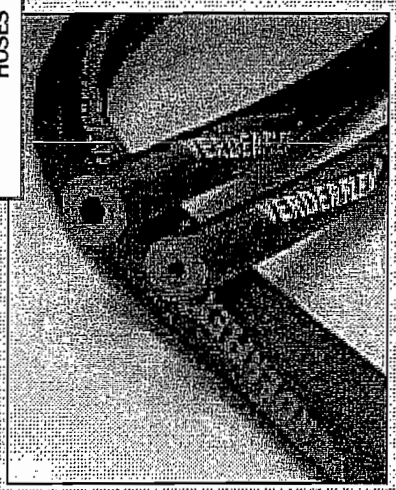

COLOUR CODING

Hose selection

VERDERFLEX NR

Most common hose for all market segments is the Natural Rubber (NR) hose. Both the core and cover are made from smooth NR and are highly resistant to abrasion. Suitable for use with lightly corrosive chemicals, highly abrasive slurries, inorganic products, etc.

VERDERFLEX NBR

This hose is particularly suitable for use with oily and fatty products, along with organic materials. The core is of nitrile rubber (NBR) and the cover is of a blend of SBR/NR in black and is spiral wound.

VERDERFLEX EPDM

This hose is suitable for highly corrosive chemicals and inorganic products. The core is made of a smooth EPDM rubber.
A particularly noteworthy feature is the cover, which is also made of EPDM, in contrast to many other hoses whose cover is made of natural rubber. This feature makes the hose exceptionally resistant to chemicals, even those for diffusing media.

Technical hose data

	Natural rubber NR	Perbunan NBR	EPDM
Colour code	white	yellow	red
Material			
Innerlayer	NR (68 °Shore A)	NBR (70 °Shore A)	EPDM (70 °Shore A)
Cover	NR (55 °Shore A)	SBR/NR (55 °Shore A)	EPDM (70 °Shore A)
Temperature	- 20° C / + 80° C	- 20° C / + 80° C	- 20° C / + 100 °C, - 5 F / + 210 F
	-5 F / + 175 F	- 5 F / + 175 F	for short time up to 120° C / 250 F
Pressure	16 bar / 230 psi	16 bar / 230 psi	16 bar / 230 psi

Type	Diameter internal [mm / inch]	Diameter external [mm / inch]	Length [mm / inch]	Weight [kg / Lb]
VF 10	10 / ½	32 / 1.26	510 / 20	0.75 / 1.7
VF 15	15 / ¾	37 / 1.40	780 / 30.7	1.0 / 2.2
VF 25	25 / 1	55 / 2.17	1005 / 39.6	2.0 / 4.4
VF 32	32 / 1 ¼	62 / 2.44	1250 / 49.2	3.1 / 6.8
VF 40	40 / 1 ½	67 / 2.64	1490 / 58.7	4.0 / 8.8
VF 50	50 / 2	81 / 3.19	1820 / 71.7	6.5 / 14.3
VF 65	65 / 2 ½	101 / 4.00	2335 / 91.9	12.5 / 27.6
VF 80	80 / 3	123 / 4.84	2780 / 109.4	22 / 48.5
VF 100	100 / 4	144 / 5.67	3270 / 128.7	35.5 / 78.3
VF 125	125 / 5	170 / 6.69	4000 / 157	43.2 / 95.2

Dimensions of the VERDERFLEX hose are nominal and allow it to be fitted to most brands of hose pumps in the market.

The VERDER Group

VERDER Group embraces several manufacturing and marketing companies specialising in liquids handling, solids handling and plastics materials technologies.

In the UK the Group is represented by VERDER Ltd (liquids handling), RETSCH UK Ltd (solids handling), and there is also a self-contained unit for manufacture and testing of several VERDER product ranges.

Liquids handling

Since its formation in the 1950s, a substantial proportion of the Group's effort has been concentrated on hermetically enclosed and sealless pumps.
By the 1990s, what had begun as an equipment distributor had developed into a major manufacturer and supplier of systems to industrial process markets.
Expansion has been fed by acquisitions, joint ventures and private label agreements, reinforced by a continuous program of R&D.

Product development is driven by customer need and R&D, resulting in continuous design improvements. This embodies the latest technology coupled with industry knowledge and application experience.

Popular brand names VERDERFLEX, VERDERLAB, VERDERMAG, VERDERAIR, VERDERMIX and VERDERGEAR are marketed through a world-wide network of distributors. In the UK, customers can deal direct with VERDER as the manufacturer. All VERDER products are covered by a two-year guarantee.

Looking to the future, VERDER has recently instituted a full series of service arrangements, covering maintenance and stock option contracts and on-site inventory control; the product itself forms just one part of a co-ordinated total supply contract.

VERDER can provide a scheme, tailored to suit the detailed requirements of any customer, called the Optimum Delivery Program.

VERDER

www.verder.com

VERDER Ltd, Whitehouse Street, Hunslet, Leeds LS10 1AD, Tel.: (44) 0113-222 02 50, Fax: (44) 0113-246 56 49, E-mail: verderflex@verder.co.uk
Affiliated companies: A - Wien • B - Aartselaar • CZ - Praha • D - Haan • DK - Ringsted • F - Eragny s/Oise • H - Budapest • NL - Groningen • PL - Katowice • RO - Bucuresti

FLEX002-102002

Performance curve VF65

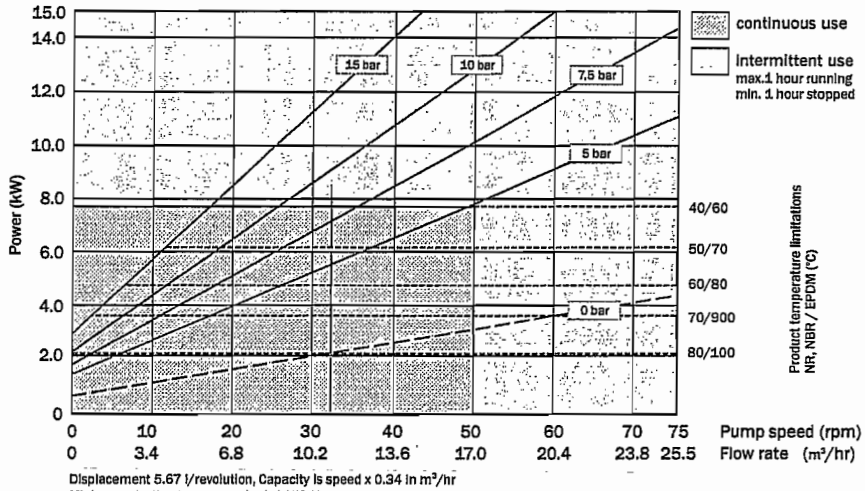

Displacement 5.67 l/revolution, Capacity is speed x 0.34 in m³/hr
Minimum starting torque required: 1150 Nm
Maximum peak power +20%

Shimming curve VF65

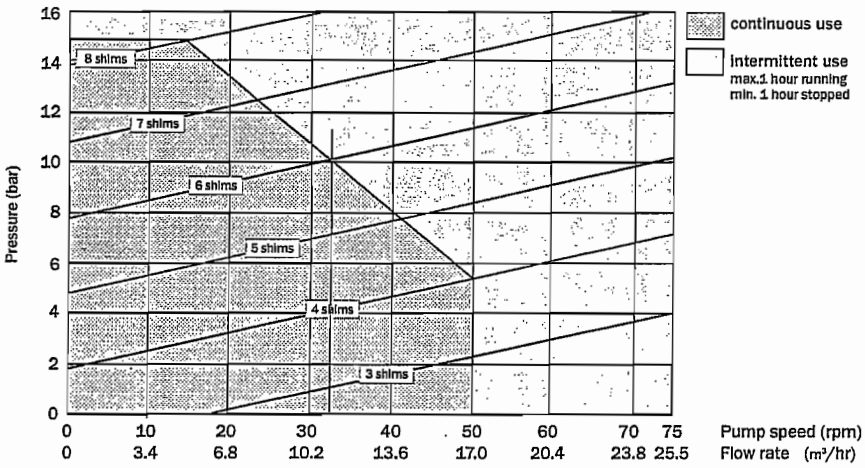

For product temperatures above 65°C and/or viscosity's above 2000 mPa·s use one shim less then shown

VF65 construction details

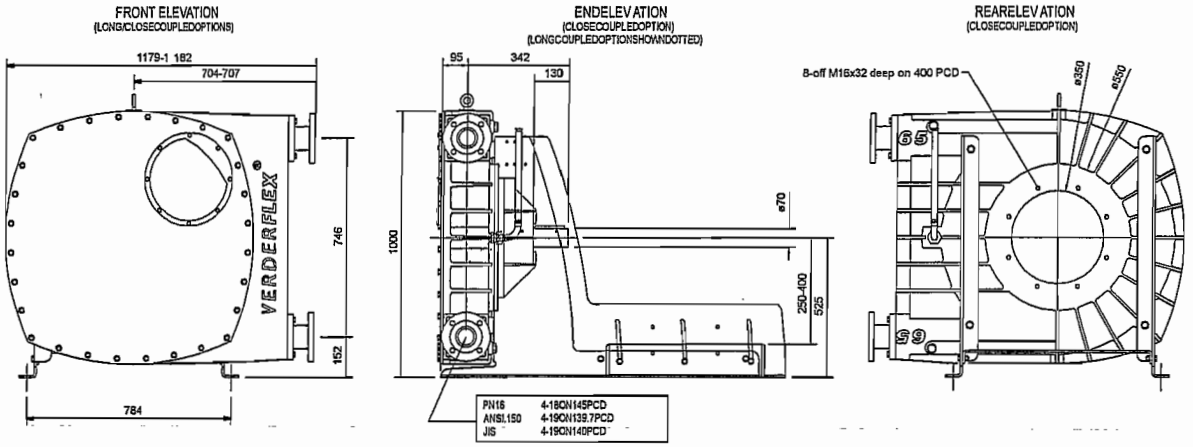

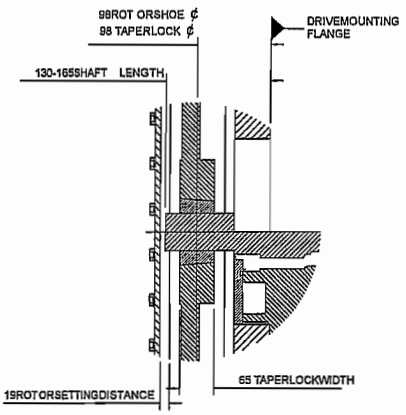

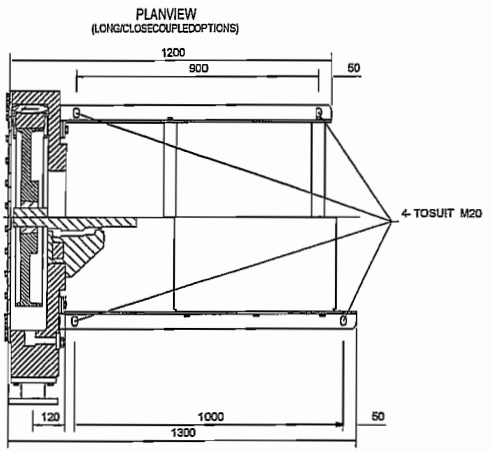

Standard materials of construction

Description	Material	Weight (kg)	Paint Detail
Pump housing	Cast Iron (GG25)	405	RAL 6018 (green)
Front Cover	Mild Steel (BS.4360 Grade 43A)	35	Coat JL421X (black)
Rotor	Cast Iron (GG25)	70	-
Roto shoes	Aluminium (LM4)	15	-
Flanges	Mild Steel (BS EN.10.025 FE430A)	20	-
Inserts	Stainless Steel (316L)	0.8	
	PolyPropelyne		
	P.V.D.F.		
Baseframe	Carbon Steel	75	Coat 9414 (silver)
Bearing cartridge	Cast Iron with high tensile steel shaft	120	Coat JL421X (black)
Lubricant	Special compound glycerine or	32	-
	silicon oil as option		
Hose	NR, NBR and EPDM	12.5	-
Close coupled pump unit - 'Flat Pack'		665.3	
Long coupled pump unit - 'Flat Pack'		785.3	

solutions
Pumping Technology

AS BUILT

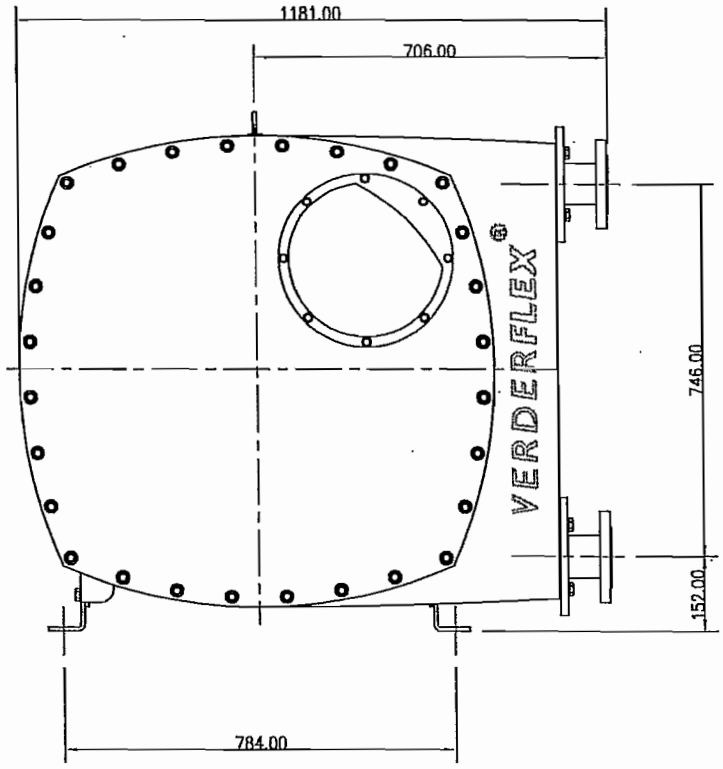

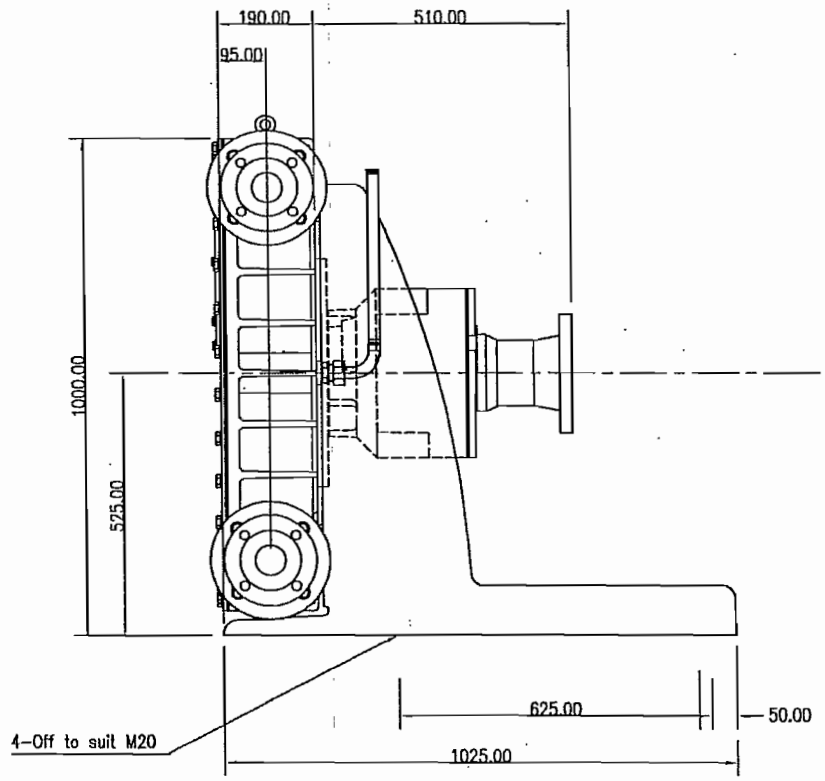

NOTES:

1. PUMP UNIT : Verderflex VF65-CC
2. SUCTION : _____
3. DISCHARGE : _____
4. PUMP DUTY : _____
5. LIQUID : _____
6. DRIVE UNIT : _____
7. COUPLING : N/A
8. 'L' : _____

REV N°	DESCRIPTION	REVISED BY	DATE
04	UPDATED WITH CURRENT FLANGE DESIGN + FILLER TUBE ADDED	P.H	06/02/03
03	Mounting frame length and hole references updated	P.H	07/01/02
02	MODIFIED FRONT COVER ADDED	A.J.H.	19.10.2000

VERDER

VERDER LTD.
Whitehouse Street
Hunslet, LEEDS LS10 1 AD
Tel: 0113-2446111
Fax: 0113-2465649
R.O. No. 813267, Leeds

a european VERDER company

NOTES:
ALL DIMENSIONS ARE IN MILLIMETERS.
DO NOT SCALE FROM THIS DRAWING.
IT IS THE RESPONSIBILITY OF THE RECIPIENT OF DRAWINGS MARKED UNCONTROLLED DOCUMENT TO ENSURE THAT THEY HAVE THE CURRENT REVISION OF THIS DRAWING.
NO PART OF THIS DRAWING MAY BE COPIED OR COMMUNICATED TO A THIRD PARTY WITHOUT PERMISSION.

BRANCH: Leeds

CUSTOMER: _____

JOB N°: _____ QUOTE N°: _____

DESCRIPTION:

General Arrangement Of:

VERDERFLEX

Dwg. does not include hose burst sensors and RPM sensors.

Tag No.: P-J600A
P.O. # 108289

	INITIAL	DATE
DRAWN BY	P.A.B.	28.01.1998.
CHECKED BY		
TOL. (mm): ± N/A	SCALE: NTS.	
DRAWING N°: VF65FCGA	REV. N°: 03	

AS BUILT

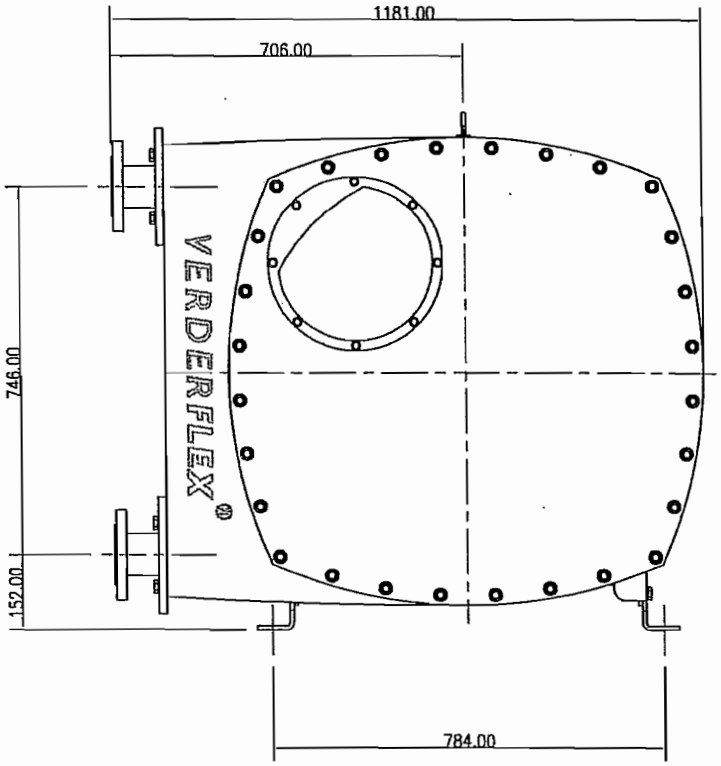

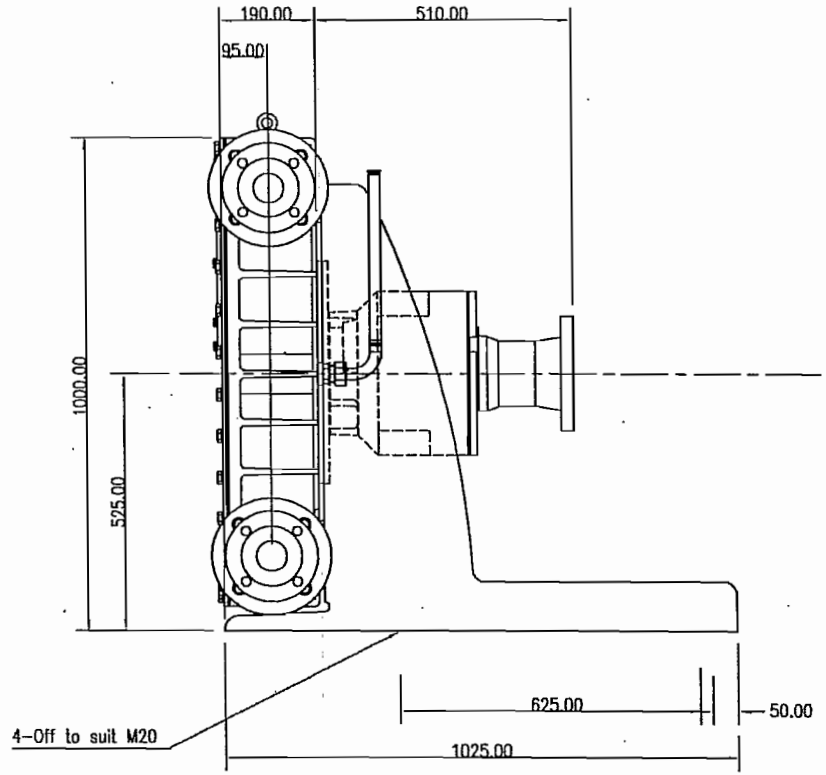

NOTES:

1. PUMP UNIT : Verderflex VF65-CC
2. SUCTION : _____
3. DISCHARGE : _____
4. PUMP DUTY : _____
5. LIQUID : _____
6. DRIVE UNIT : _____
7. COUPLING : N/A
8. 'L' : _____

REV N°	DESCRIPTION	REVISED BY	DATE
04	UPDATED WITH CURRENT FLANGE DESIGN + FILLER TUBE ADDED	P.H	06/02/03
03	Mounting frame length and hole references updated	P.H	07/01/02
02	MODIFIED FRONT COVER ADDED	A.J.H.	19.10.2000

VERDER

VERDER LTD.
Whitehouse Street
Hunslet, LEEDS LS10 1 AD
Tel: 0113-2446111
Fax: 0113-2465649
R.O. No. 813267, Leeds

a european VERDER company

NOTES:
ALL DIMENSIONS ARE IN MILLIMETERS.
DO NOT SCALE FROM THIS DRAWING.
IT IS THE RESPONSIBILITY OF THE RECIPIENT OF DRAWINGS MARKED UNCONTROLLED DOCUMENT TO ENSURE THAT THEY HAVE THE CURRENT REVISION OF THIS DRAWING.
NO PART OF THIS DRAWING MAY BE COPIED OR COMMUNICATED TO A THIRD PARTY WITHOUT PERMISSION.

BRANCH: Leeds

CUSTOMER: _____

JOB N°: _____ QUOTE N°: _____

DESCRIPTION:

General Arrangement Of:

VERDERFLEX

Dwg. does not include hose burst sensors and RPM sensors.

Tag No.: P-J620A
P.O. # 108289

	INITIAL	DATE
DRAWN BY	P.A.B.	28.01.1998.
CHECKED BY		
TOL. (mm): ± N/A	SCALE: NTS.	
DRAWING N°: VF65FCGA	REV. N°: 03	

AS BUILT

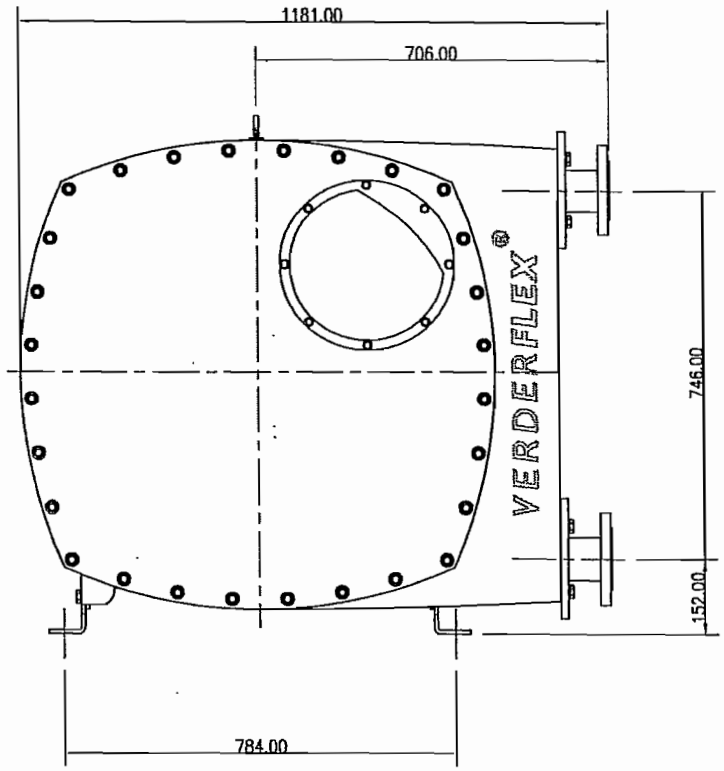

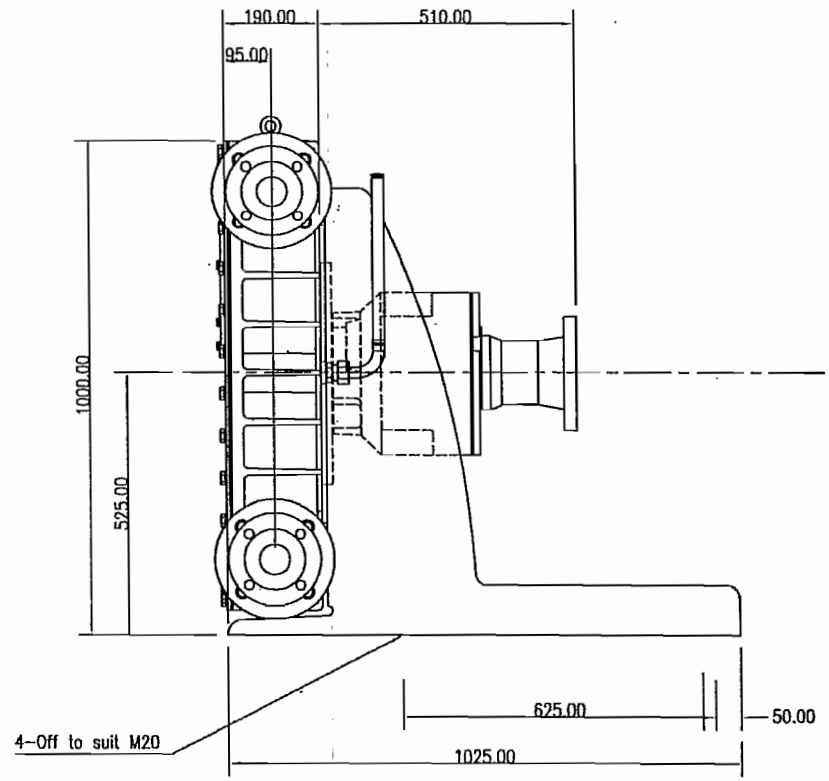

NOTES:

1. PUMP UNIT : Verderflex VF65-CC
2. SUCTION : _____
3. DISCHARGE : _____
4. PUMP DUTY : _____
5. LIQUID : _____
6. DRIVE UNIT : _____
7. COUPLING : N/A
8. 'L' : _____

REV N°	DESCRIPTION	REVISED BY	DATE
04	UPDATED WITH CURRENT FLANGE DESIGN + FILLER TUBE ADDED	P.H	06/02/03
03	Mounting frame length and hole references updated	P.H	07/01/02
02	MODIFIED FRONT COVER ADDED	A.J.H.	19.10.2000

VERDER

VERDER LTD.
Whitehouse Street
Hunslet, LEEDS LS10 1 AD
Tel: 0113-2446111
Fax: 0113-2465649
R.O. No. 813267, Leeds

a european VERDER company

NOTES:
ALL DIMENSIONS ARE IN MILLIMETERS.
DO NOT SCALE FROM THIS DRAWING.
IT IS THE RESPONSIBILITY OF THE RECIPIENT OF DRAWINGS MARKED UNCONTROLLED DOCUMENT TO ENSURE THAT THEY HAVE THE CURRENT REVISION OF THIS DRAWING.
NO PART OF THIS DRAWING MAY BE COPIED OR COMMUNICATED TO A THIRD PARTY WITHOUT PERMISSION.

BRANCH: Leeds

CUSTOMER: _____

JOB N°: _____ QUOTE N°: _____

DESCRIPTION:

General Arrangement Of:

VERDERFLEX

Dwg. does not include hose burst sensors and RPM sensors.

Tag No.: P-J640A
P.O. # 108289

	INITIAL	DATE
DRAWN BY	P.A.B.	28.01.1998.
CHECKED BY		
TOL. (mm): ± N/A		SCALE: NTS.
DRAWING N°: VF65FCGA		REV. N°: 03

AS BUILT

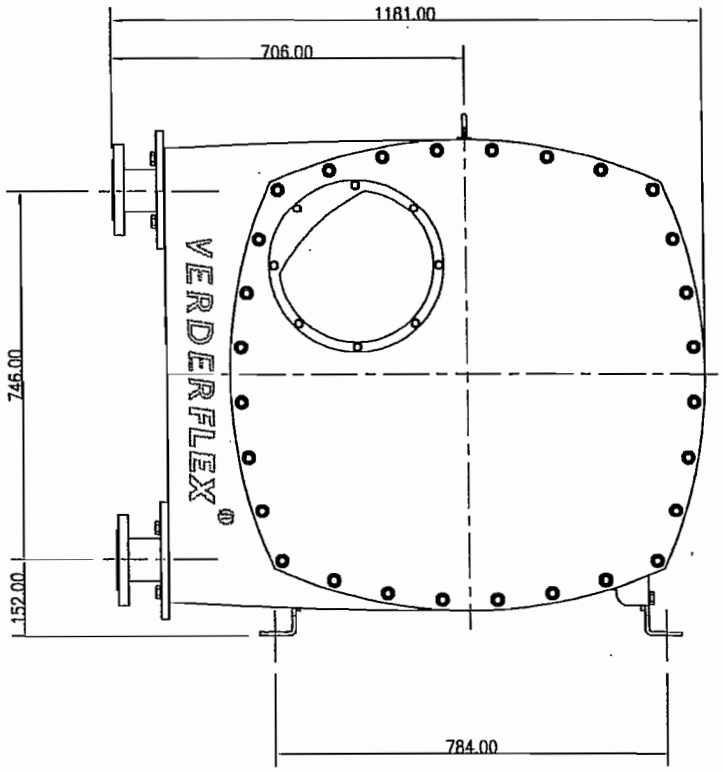

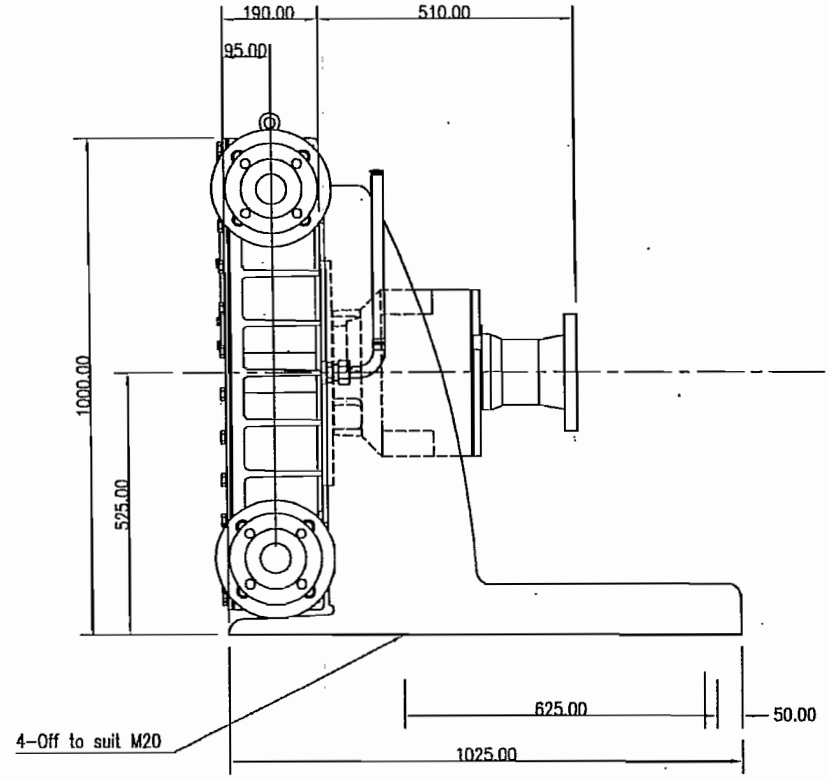

NOTES:

1. PUMP UNIT : Verderflex VF65-CC
2. SUCTION : _____
3. DISCHARGE : _____
4. PUMP DUTY : _____
5. LIQUID : _____
6. DRIVE UNIT : _____
7. COUPLING : N/A
8. 'L' : _____

REV N°	DESCRIPTION	REVISED BY	DATE
04	UPDATED WITH CURRENT FLANGE DESIGN + FILLER TUBE ADDED	P.H	06/02/03
03	Mounting frame length and hole references updated	P.H	07/01/02
02	MODIFIED FRONT COVER ADDED	A.J.H.	19.10.2000

VERDER

VERDER LTD.
Whitehouse Street
Hunslet, LEEDS LS10 1 AD
Tel: 0113-2446111
Fax: 0113-2465649
R.O. No. 813267, Leeds

a european VERDER company

NOTES:
ALL DIMENSIONS ARE IN MILLIMETERS.
DO NOT SCALE FROM THIS DRAWING.
IT IS THE RESPONSIBILITY OF THE RECIPIENT OF DRAWINGS MARKED UNCONTROLLED DOCUMENT TO ENSURE THAT THEY HAVE THE CURRENT REVISION OF THIS DRAWING.
NO PART OF THIS DRAWING MAY BE COPIED OR COMMUNICATED TO A THIRD PARTY WITHOUT PERMISSION.

BRANCH: Leeds

CUSTOMER: _____

JOB N°: _____ QUOTE N°: _____

DESCRIPTION:

General Arrangement Of:

VERDERFLEX

Dwg. does not include hose burst sensors and RPM sensors.

Tag No.: P-J660A
P.O. # 108289

	INITIAL	DATE
DRAWN BY	P.A.B.	28.01.1998.
CHECKED BY		

TOL. (mm): ± N/A SCALE: NTS.

DRAWING N°: VF65FCGA REV. N°: 03

HELICAL SPEED REDUCER

DOUBLE AND TRIPLE REDUCTION
FOR ASSEMBLY WITH NEMA MOTORS

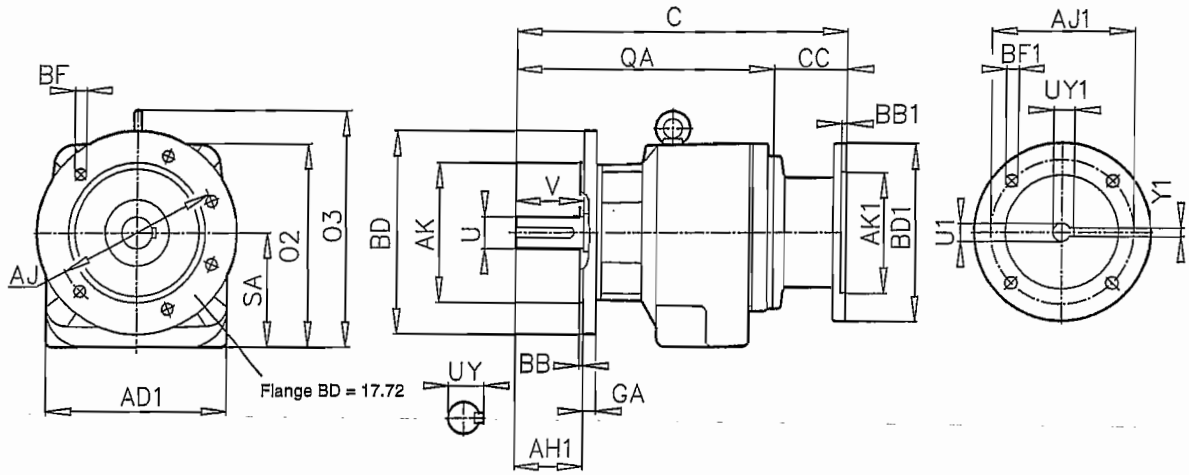

Type		Mounting dimensions (bolt-on B5 flange)						Outline dimensions								Shaft dimensions		
		AJ	AK	BB	BD	BF	GA	AD1	AH1	C	CC	O2	O3	QA	SA	U	UY	V
		Standard shown in bold. Must specify BD dimension.															Key	
SK 872 F	- 140 TC	8.46	7.087	0.16	9.84	0.53	0.63			19.96	5.20			14.76		2.125	2.35	3.94
	- 180 TC	10.43	9.055	0.16	11.81	0.53	0.79			22.52	7.48			15.04				
	- 210 TC	**11.81**	**9.843**	**0.20**	**13.78**	**0.69**	**0.79**	11.42	3.94	22.52	7.48	12.76	14.41		7.09			
	- 250 TC									23.37	8.09			15.28				
	- 280 TC									23.63	8.35						1/2 * 1/2 * 2-5/8	
SK 873 F	- 140 TC	8.46	7.087	0.16	9.84	0.53	0.63			20.32	5.20			15.12		2.125	2.35	3.94
	- 180 TC	10.43	9.055	0.16	11.81	0.53	0.79			22.87	7.48			15.39				
	- 210 TC	**11.81**	**9.843**	**0.20**	**13.78**	**0.69**	**0.79**	11.42	3.94	22.87	7.48	12.76	14.41		7.09			
	- 250 TC									23.73	8.09			15.63				
	- 280 TC									23.98	8.35						1/2 * 1/2 * 2-5/8	
SK 972 F	- 140 TC	10.43	9.055	0.16	11.81	0.53	0.79			21.97	5.20			16.77		2.375	2.65	4.72
	- 180 TC	11.81	9.843	0.20	13.78	0.69	0.79			24.35	7.48			16.87				
	- 210 TC	**15.75**	**13.780**	**0.20**	**17.72**	**0.69**	**0.87**	13.39	4.72	24.35	7.48	15.67	17.68		8.86			
	- 250 TC									25.20	8.09			17.11				
	- 280 TC									25.46	8.35						5/8 * 5/8 * 3-1/4	
SK 973 F	- 140 TC	10.43	9.055	0.16	11.81	0.53	0.79			22.48	5.20			17.28		2.375	2.65	4.72
	- 180 TC	11.81	9.843	0.20	13.78	0.69	0.79			24.86	7.48			17.38				
	- 210 TC	**15.75**	**13.780**	**0.20**	**17.72**	**0.69**	**0.87**	13.39	4.72	24.86	7.48	15.67	17.68		8.86			
	- 250 TC									25.71	8.09			17.62				
	- 280 TC									25.97	8.35						5/8 * 5/8 * 3-1/4	

NEMA	AJ1	AK1	BB1	BD1	BF1	U1	UY1	Y1
140 TC	5.88	4.500	0.20	6.61	0.43	0.875	0.96	0.188
180 TC	7.25	8.500	0.23	9.17	0.59	1.125	1.24	0.250
210 TC	7.25	8.500	0.23	9.17	0.59	1.375	1.52	0.312
250 TC	7.25	8.500	0.23	9.17	0.59	1.625	1.80	0.375
280 TC	9.00	10.500	0.23	11.26	0.59	1.875	2.10	0.500

See page 78 for metric shafts and for IEC motor adapters.
Technical design may be subject to change. DXF files available upon request.

VERDERFLEX®

Pump Options and System Performance Calculator

Target Flow	10,500.0	Litres per hour
Duty	Continuous	

System Parameters — 0.8% Sodium Hypochlorite Pumps

Product SG	1.168	
Viscocity	1	CPS
Temperature	25	°C

Suction Line Details

Length	25	Feet	
Diameter	2	Inches	
Suction Lift	1	Feet	+ is above pump, - is lift from below pump
Equipt Loss	0	PSI	
Absolute Tank Pressure	14.5	PSI	Atmospheric is 100 kPa /1 bar / 14.5 PSI abs
Vapr Press	0.0235	PSI	
Damper Fitted	Yes		
Damper Efficiency	90	%	

Discharge Line Details

Length	100	Feet
Diameter	2	Inches
Head	35	Metres
Equipt Loss	5	PSI
Damper Fitted	Yes	
Damper Efficiency	90	%

Selected Pumps

- #1 is smallest size for given flow and will have shortest hose life
- #2 is next size up and represents a compromise of initial cost and hose life
- #3 is 2 sizes above smallest possible pump for a given flow and will have best hose life, but highest initial cost

	#1	#2	#3	
Pump	VF65	VF80	VF100	
Speed	30.9	15.8	9.5	rpm
Max Pump Speed	150	40	30	rpm
% Max Speed	62%	39%	32%	
Relative Hose Life	100%	196%	324%	

Relative Hose Life is expressed as % of Smallest Pump Selection

% Maximum Pump Viscocity	0%	0%	0%	
Pump Maximum Viscocity	17000	27000	35000	CPS
Viscocity OK ?	OK	OK	OK	
Vacuum Recommended ?	No	No	No	

System Calculations - Suction Side

				Units
Static Head		0.03		Bar
Suction Line Particle Velocity		1.44		m/sec
Impulse Loss No Damper	1.8	0.9	0.6	Bar
Impluse Loss Acceptable ?	TOO HIGH	TOO HIGH	TOO HIGH	

Limit is 40 kPa/6PSI → Increase Line ID, Fit Damper or Change Pump Size

Damper Fitted ?	Yes	Yes	Yes	
Damper Efficiency	90%	90%	90%	
Net Impulse Loss	0.2	0.1	0.1	Bar

Net Impulse Loss shows effect of Suction Side Pulsation Damper (if fitted)

Reynolds No		85389.3		
Friction Loss		0.0		Bar
Friction Loss Type		TURBULENT		
Net Losses	0.2	0.1	0.1	Bar
Inlet Pressure	0.8	0.9	1.0	Bar
Inlet Pressure OK ?	OK	OK	OK	Min is 20 kPa /3PSI abs

System Calculations - Discharge Side

				Units
Static Head		4.0		Bar
Discharge Line Particle Velocity		1.44		m/sec
Impulse Loss	7.2	3.7	2.2	Bar
Damper Fitted	Yes	Yes	Yes	
Damper Efficiency	90%	90%	90%	
Damped Impulse Loss	0.7	0.4	0.2	Bar

Damped Impulse Loss shows effect of Discharge Side Pulsation Damper (if fitted)

Reynolds No		85389.31		
Friction Loss		0.2		Bar
Friction Loss Type		TURBULENT		
Net Losses	0.7	0.4	0.3	Bar
Net Discharge Pressure	5.1	4.8	4.6	Bar
Discharge Pressure OK ?	OK	OK	OK	
Absorbed Power	7.2	6.9	9.2	HP
Starting Torque	1900	2400	4500	Nm
Min Power to Start	8.2	5.3	6.0	HP

www.verder.com

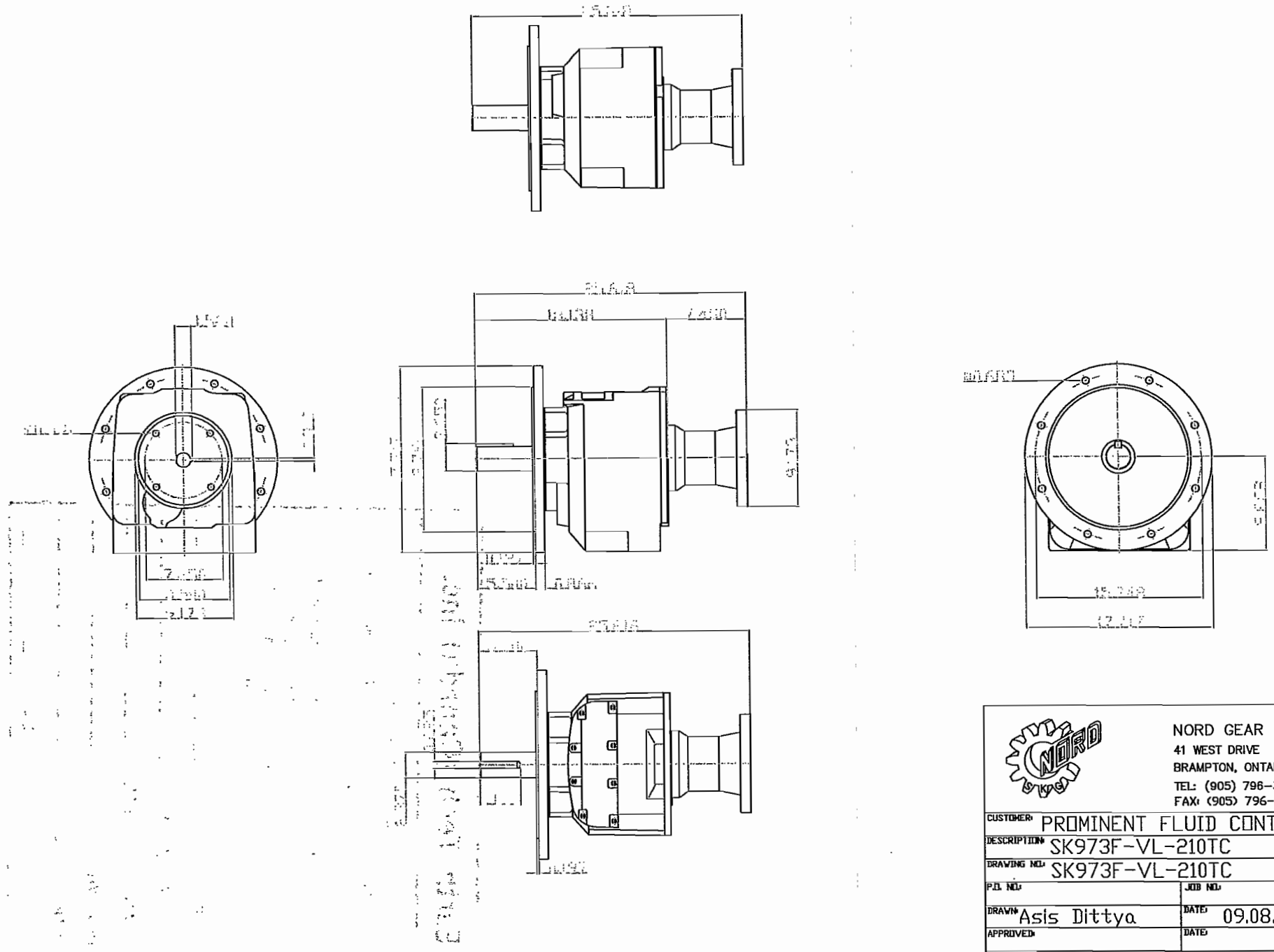

NORD GEAR LIMITED
41 WEST DRIVE
BRAMPTON, ONTARIO L6T 4A1
TEL: (905) 796-3606
FAX: (905) 796-6976

CUSTOMER: PROMINENT FLUID CONTROLS LTD	
DESCRIPTION: SK973F-VL-210TC	
DRAWING NO: SK973F-VL-210TC	
P.O. NO:	JOB NO:
DRAWN: Asis Dittya	DATE: 09.08.2006
APPROVED:	DATE:
SCALE:	DRAWN IN INCHES
NOTES: [illegible]	

Earth Tech (Canada) Inc.

Reviewed for general conformance with design intent. Responsibility for detailed design in the shop drawings rests with the Contractor.

Responsibility for verification and correlation of field dimensions, fabrication process, techniques of construction, installation and coordination of all parts of the work rests with the Contractor.

REVIEWED _____

REVIEWED AS MODIFIED _____

REVISE AND RE-SUBMIT _____

NOT REVIEWED _____

Project No. C28/16/74588

Date: 12/9/06 By: M. Poulson

ABB MOTOR

Industrial Solutions & Automation Inc.

6780 Davand Dr. Unit:26 , Mississauga,On.,L5T 2G4
Tel: 905 795 1358 – Fax: 905 795 1657
www.industrialsolutions.ca

August 23, 2006

Attention: Gabriel

METCON SALES & ENGINEERING LTD.

Reference P.O # 108229

To Whom It May Concern: The ABB Drive, CAT # ACS800-U1-0016-7. Is compatible with the ABB 10HP, 575-V, 3 Phase, 60HZ. Inverter Duty Motor "(1800RPM215TC)

Junior B. Gillard

Manager
Industrial Solutions & Automation Inc.

Tel: (905) 795 1358
Fax: (905) 795 1657

This fax was received by GFI FAXmaker fax server. For more information, visit: http://www.gfi.com

IPSD

Inverter Plus, Severe Duty Low Voltage, T-Frame Motors

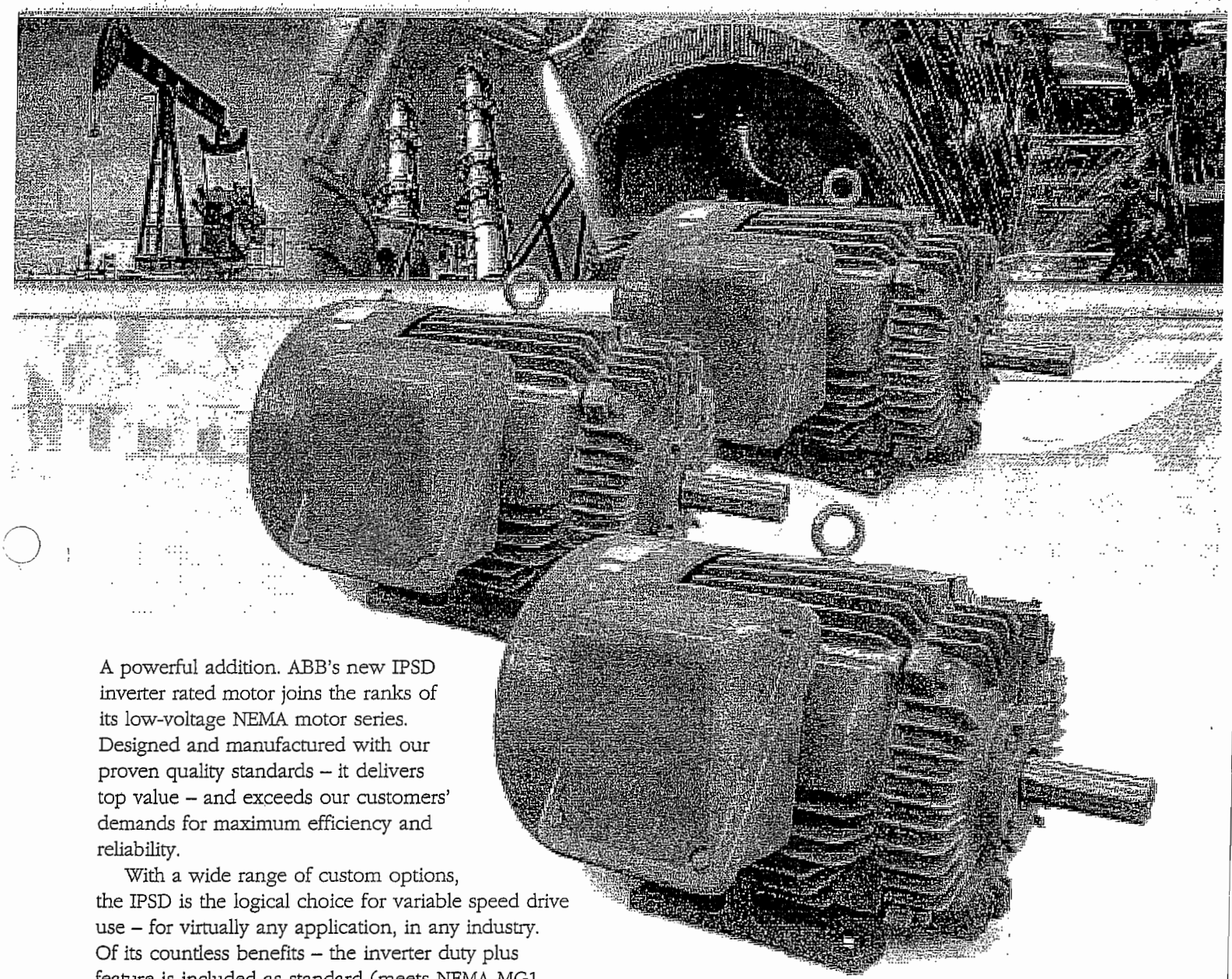

A powerful addition. ABB's new IPSD inverter rated motor joins the ranks of its low-voltage NEMA motor series. Designed and manufactured with our proven quality standards – it delivers top value – and exceeds our customers' demands for maximum efficiency and reliability.

With a wide range of custom options, the IPSD is the logical choice for variable speed drive use – for virtually any application, in any industry. Of its countless benefits – the inverter duty plus feature is included as standard (meets NEMA MG1 Part 31-1998) – reducing motor stocking requirements for VFD or DOL applications.

All cast-iron construction and high reliability features guarantee that this rugged, Severe Duty type motor withstands the harshest environmental conditions.

Add ABB's commitment to product availability, local service and support, industry know-how and application expertise, and you've got the top performance and high value expected from an industry leader.

ABB

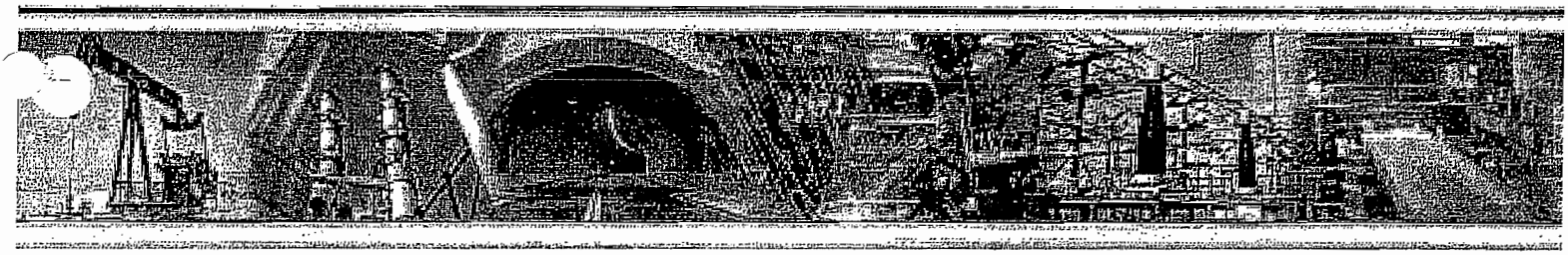

Technical Overview:

- 575V or 230/460V 3-phase, 60 Hz (usable at 208V up to 100 HP, 460V only on 200 HP and greater).
- TEFC enclosure type.

Renowned Reliability. Superior Value

- All cast iron construction, including frame, end bells, terminal box and fan cover. Durable nylon fan or aluminum alloy 250T-440T frame.
- Designed for Severe Duty Environments.
- Durable non-sparking fan.
- All ABB severe duty motors are fitted with recessed shaft slinger or V ring seal on the drive end to help protect the bearings from the ingress of dust, dirt or fluids.
- Internal bearing caps on re-greasable bearing models.
- Re-greasable bearings on 320 frames and above.
- Oversized bearings.
- Oversized Cast Iron Terminal box. Neoprene gasket for cover and box/frame, diagonally split and rotatable in 90 degree increments, protects the insulation from chaffing on the casting and seals the motor when the terminal box is removed.
- Stainless steel nameplate with bearing details.

Top Performance. Superior Value

- Energy efficient designs meet/exceed EPAct/NRCan efficiency levels. EEV certified.
- Low temperature rise for longer life.
- Inverter Duty Insulation meets NEMA MG1 Part 31-1998 specification. This allows our customers to reduce their motor inventory knowing that IPSD motors are suitable for DOL or VFD applications.
- High starting and breakdown torque for tough loads.
- NEMA design B.
- Class F insulation, Class B temperature rise at nameplate HP rating.
- 1.15 service factor on sine wave and 1.0 on Variable Frequency Drives.

ABB

Ainsworth Inc. - Master Distributor
Industrial Drives Group
131 Bermondsey Road
Toronto, ON M4A 1X4
Tel: (416) 750-6677
Fax: (416) 751-9402
drives@ainsworth.com

INVERTER PLUS SEVERE DUTY AC MOTORS

SQUIRREL–CAGE INDUCTION

ENCLOSURE: TOTALLY ENCLOSED
MOUNTING: FOOT

CAST IRON FRAME
FRAME 215T

COOLING: FAN COOLED

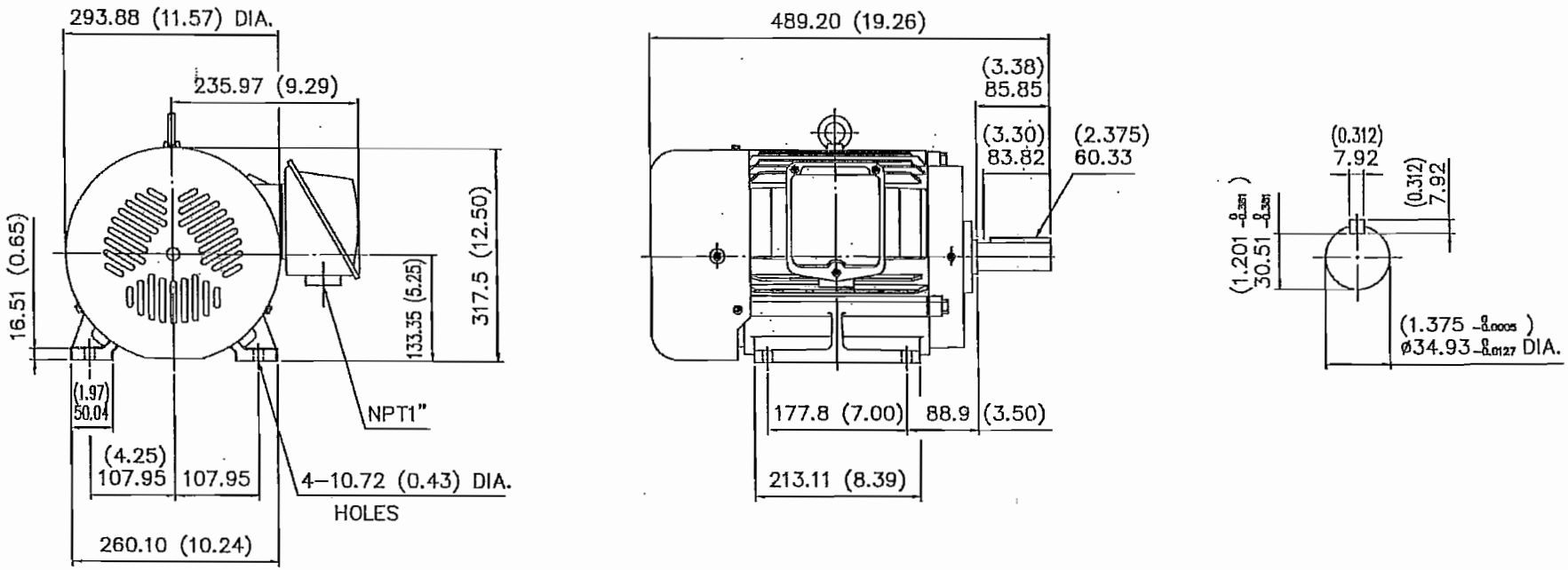

(1) DIMENSIONS ARE IN MM (INCHES)
(2) APPROXIMATE WEIGHT = 10 HP, 2P, -68.5 KG. (151 LBS.)
10 HP, 4P, -71 KG. (157 LBS.)
5 HP, 6P, -71 KG. (157 LBS.)
(3) DRIVE END BEARING 6308ZZ
OPPOSITE DRIVE END BEARING 6208ZZ
(4) INTERNAL VOLUME OF CONDUIT BOX=1093 CU. CM.
(66.70 CU. IN.)

BY: Date	Project No.	Project	
CHK. :	Bill of Material No.	Title: OUTLINE DRAWING	Sh/of
Responsible Department: SERVICE	Next Assembly	THREE PHASE INDUCTION MOTOR ____HP, ____P, ____V, ____HZ	NTS
ABB INC, 3450 HARVESTER RD., BURLINGTON, ON L7N 3W5		Drawing No. IPSD–880141–1	Revision

"THIS DRAWING IS THE PROPERTY OF ABB AND CONTAINS PROPRIETARY AND CONFIDENTIAL INFORMATION, WHICH MUST NOT BE DUPLICATED, USED OR DISCLOSED OTHER THAN AS EXPRESSLY AUTHORIZED BY ABB."

ABB

NEMA Motors

IPSD - 575 Volt

August 26, 2003

Inverter Plus Severe Duty

Inverter Duty Insulation Meets MG1 Part 31-1998 Specification

Efficiency Design meets/exceeed Epact/NRCan efficiency levels, EEV certified

TEFC, All Cast Iron Construction, including conduit box and fan cover

Class F insulation, Class B temperature rise at nameplate HP rating

1.15 Service Factor on sine wave

1.0 Service Factor on VFD

NEMA Design B

575 Volts, 3 Phase, 60 Hertz

Frames 140 - 280 greased for life, 320 and above are regreasable

CSA Certified for Class I, Groups A, B, C & D, Division II, Temp. Code - T3

Class II, Groups F & G, Division II, Temp. Code - T3

Suitable for Variable torque: 0 to Rated Speed or Constant torque 4:1 Ratio

HP	RPM	FRAME	CAT. NO. 575V
1	3600	143T	B41542154- LEA
	1800	143T	B41544154- LEA
	1200	145T	B41546154- LEA
	900	182T	B41588154- LEA
1.5	3600	143T	B41542155- LEA
	1800	145T	B41544155- LEA
	1200	182T	B41586155- LEA
	900	184T	B41588155- LEA
2	3600	145T	B41542156- LEA
	1800	145T	B41544156- LEA
	1200	184T	B41586156- LEA
	900	213T	B41618156- LEA
3	3600	182T	B41582157- LEA
	1800	182T	B41584157- LEA
	1200	213T	B41616157- LEA
	900	215T	B41618157- LEA
5	3600	184T	B41582158- LEA
	1800	184T	B41584158- LEA
	1200	215T	B41616158- LEA
	900	254T	B41658158- LEA
7.5	3600	213T	B41612159- LEA
	1800	213T	B41614159- LEA
	1200	254T	B41656159- LEA
	900	256T	B41658159- LEA
10	3600	215T	B41612160- LEA
	1800	215T	B41614160- LEA
	1200	256T	B41656160- LEA
	900	284T	B41688160- LEA
15	3600	254T	B41652161- LEA
	1800	254T	B41654161- LEA
	1200	284T	B41686161- LEA
	900	286T	B41688161- LEA
20	3600	256T	B41652162- LEA
	1800	256T	B41654162- LEA
	1200	286T	B41686162- LEA
	900	324T	B42726162- LEA
25	3600	284TS	B41682163- LEA
	1800	284T	B41684163- LEA
	1200	324T	B42726163- LEA
	900	324T	B42728163- LEA

HP	RPM	FRAME	CAT. NO. 575V
30	3600	286TS	B41682164- LEA
	1800	286T	B41684164- LEA
	1200	326T	B42726164- LEA
	900	364T	B42768164- LEA
40	3600	324TS	B42722165- LEA
	1800	324T	B42724165- LEA
	1200	364T	B42766165- LEA
	900	365T	B42768165- LEA
50	3600	326TS	B42722166- LEA
	1800	326T	B42724166- LEA
	1200	365T	B42766166- LEA
	900	404T	B42808166- LEA
60	3600	364TS	B42762167- LEA
	1800	364T	B42764167- LEA
	1200	404T	B42806167- LEA
	900	405T	B42808167- LEA
75	3600	365TS	B42762168- LEA
	1800	365T	B42764168- LEA
	1200	405T	B42806168- LEA
	900	444T	B42848168- LEA
100	3600	405TS	B42802169- LEA
	1800	405T	B42804169- LEA
	1200	444T	B42846169- LEA
	900	445T	B42848169- LEA
125	3600	444TS	B42842170- LEA
	1800	444T	B42844170- LEA
	1200	445T	B42846170- LEA
	900	447T	B42848170- LEA
150	3600	445TS	B42842171- LEA
	1800	445T	B42844171- LEA
	1200	447T	B42846171- LEA
	900	449T	B42848171- LEA
200	3600	447TS	B42842172- LEA
	1800	447T	B42844172- LEA
	1200	449T	B42846172- LEA
	900		Refer to ABB
250	3600	449TS	B42842173- LEA
	1800	449T	B42844173- LEA
	1200	449T	B42846173- LEA
	900		Refer to ABB

900 rpm motors are standard efficiency

Pricing and data subject to change without notice

IPSD

ABB

TYPICAL PERFORMANCE DATA

ABB Inverter Plus- Severe Duty
Squirrel Cage Induction Motors
Cast Iron Frame, 3 Phase, 1.15 S.F., 40 deg. C ambient

Rev 1. Sept. 30, 2003

OUTPUT	SPEED	FRAME	FULL LOAD CURRENT			LRC	TORQUE			NOM. EFFICIENCY			POWER FACTOR			STALL TIME
HP	Full load	NEMA	230V	460V	575V		RATED	LRT	BDT	100.0%	75.0%	50.0%	100.0%	75.0%	50.0%	(H / C)
	rpm		amps	amps	amps	% FLA	lb·ft	%	%	%	%	%	%	%	%	sec
0.75	1140	143T	2.7	1.4	1.1	667	3.5	260	290	78.0	78.0	76.0	67.0	59.0	46.0	10/20
1	3465	143T	3	1.5	1.2	730	1.5	290	340	80.0	78.0	73.0	80.0	73.0	60.0	7/14
	1710	143T	2.9	1.5	1.2	620	3.1	200	245	82.5	83.5	82.5	82.0	77.0	66.0	7/14
	1130	145T	3.4	1.7	1.4	530	4.6	220	240	80.0	80.0	78.0	69.0	61.0	48.0	10/20
	855	182T	5	2.5	2.0	530	6.18	260	300	73.0	70.0	62.0	55.0	50.0	42.0	10/20
1.5	3525	143T	4.4	2.2	1.8	727	2.1	220	270	82.5	83.0	81.0	78.0	78.0	70.0	7/14
	1715	145T	4.2	2.1	1.7	619	4.6	210	270	84.0	85.0	84.0	81.0	75.0	64.0	7/14
	1165	182T	4.6	2.3	1.8	695	6.75	260	300	85.5	86.0	84.5	71.0	63.0	50.0	10/17
	855	184T	6.6	3.3	2.6	492	10.7	210	280	75.0	71.0	63.0	60.0	54.0	44.0	10/17
2	3520	145T	5.2	2.6	2.1	865	3.0	220	260	84.0	84.0	83.0	86.0	80.0	70.0	7/14
	1715	145T	5.6	2.8	2.2	750	6.1	250	290	84.0	84.0	84.0	81.0	75.0	64.0	7/14
	1165	184T	6.2	3.1	2.5	774	9.0	270	310	86.5	86.5	84.0	71.0	63.0	50.0	10/17
	865	213T	7.6	3.8	3.0	640	12.21	200	235	80.0	74.0	67.0	65.0	59.0	48.0	10/17
3	3520	182T	7.2	3.6	2.9	889	4.47	250	370	85.5	85.5	83.5	89.0	85.0	77.0	7/12
	1735	182T	8	4.0	3.2	800	9.0	250	320	87.5	87.5	86.0	82.0	76.0	65.0	7/14
	1165	213T	8.9	4.5	3.6	596	13.4	200	280	87.5	87.5	86.0	72.0	65.0	52.0	7/14
	865	215T	10	5.0	4.0	660	17.91	200	240	82.5	78.0	71.0	71.0	65.0	54.0	7/14
5	3490	184T	11.8	5.9	4.7	780	7.5	240	340	87.5	88.0	87.0	91.0	88.5	82.5	7/12
	1735	184T	12.8	6.4	5.1	719	15.1	240	300	87.5	88.0	87.5	85.0	81.0	71.0	7/14
	1170	215T	14.6	7.3	5.8	623	22.4	210	290	87.5	87.5	86.5	74.0	67.0	55.0	10/15
	865	254T	16	8.0	6.4	566	30.1	190	260	84.0	79.0	72.0	74.0	67.0	58.0	10/15
7.5	3500	213T	18.8	9.4	7.5	676	11.2	240	280	88.5	89.0	88.0	85.0	84.0	78.0	7/14
	1760	213T	18.9	9.5	7.6	672	22.3	210	270	89.5	90.0	89.5	83.5	80.0	70.0	7/14
	1170	254T	20	10.0	8.0	625	33.7	200	260	89.5	89.5	89.0	81.5	77.5	67.5	7/14
	865	256T	23.6	11.8	9.4	530	44.8	160	190	84.0	80.0	73.0	74.0	67.0	59.0	7/14
10	3495	215T	24	12.0	9.6	675	15.0	240	280	89.5	89.0	88.0	87.5	86.0	82.0	7/12
	1760	215T	25.2	12.6	10.1	643	29.8	210	270	89.5	90.0	89.5	83.5	80.0	70.5	7/14
	1175	256T	26.6	13.3	10.6	605	44.7	210	280	89.5	90.0	90.0	78.5	73.5	63.5	7/14
	860	284T	30.6	15.3	12.2	508	61.4	200	280	87.0	80.0	73.0	74.0	68.0	60.0	7/14
15	3510	254T	35.2	17.6	14.1	656	22.5	200	250	90.2	89.0	88.0	91.0	89.5	85.5	7/12
	1750	254T	36.6	18.3	14.6	628	44.8	210	290	91.0	91.0	90.5	87.0	84.0	76.0	7/14
	1175	284T	40	20.0	16.0	525	67.2	170	240	90.2	90.5	90.0	79.5	75.5	66.0	7/14
	860	286T	45.4	22.7	18.2	508	90.0	200	210	87.0	81.0	74.0	74.5	68.5	61.0	7/14
20	3510	256T	47	23.5	18.8	617	29.9	200	270	90.2	90.5	90.0	90.5	89.0	85.0	7/12
	1755	256T	49.2	24.6	19.7	589	59.8	220	290	91.0	91.5	91.0	86.0	82.5	73.5	7/14
	1170	286T	52	26.0	20.8	542	89.7	170	240	90.2	90.5	90.0	81.0	77.5	69.0	7/14
	865	324T	58.6	29.3	23.4	496	122.0	190	210	88.0	82.0	74.0	76.0	69.0	61.0	7/14
25	3540	284TS	59	29.5	23.6	619	37.1	190	300	91.0	91.0	90.0	90.0	89.0	85.0	7/12
	1760	284T	62	31.0	24.8	581	74.5	200	250	92.4	92.5	91.0	85.5	82.5	77.0	7/14
	1175	324T	62	31.0	24.8	589	112.0	200	260	91.7	91.0	90.5	84.5	80.5	70.5	7/14
	865	326T	73.2	36.6	29.3	500	151.0	200	215	88.0	83.0	75.0	76.0	69.0	61.0	7/14

Notes:

1. The above typical values based on test.
2. Actual test data per IEEE-112 method B.
3. For 200HP and larger are 460 volts only.
4. 208V usable on identified value.

ABB

Torque - Speed Curve of Induction Motor

File No: 10HP-4P

Output:	10HP	Phase:	3	Model:	IPSD
Poles:	4	Frame No.:	215T	Time Rating:	Continue
Freq.(Hz):	60	Enclosure:	TEFC	Type of Rotor	Cage
Ins. Class:	F	Speed(rpm):	1760	Revised:	0

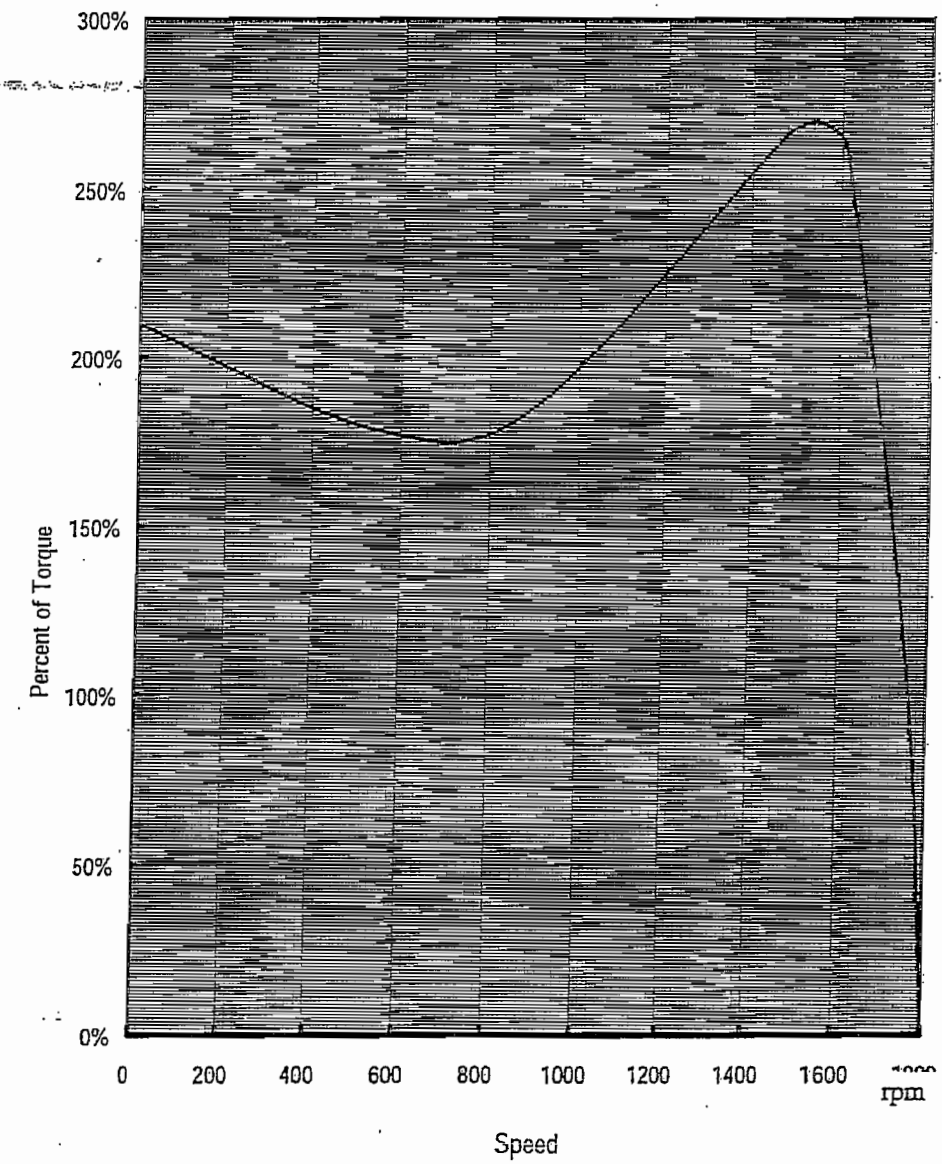

ABB

Painting Specifications for Standard Motors

Standard

1. **Scope: This Standard specifies the painting to be used on all standard electric motors.**

2. **Paint:**

	Primer Paint	Finish Paint	
Main Composition	Phenolic Resin	NEMA Frame #440T .IEC Frame #280. and below	NEMA Frame #5007N .IEC Frame #315. and above
Colour	As Vendor's Supply	Blue 8B 4.5/3.25	

3. **Painting ~ Thickness**

Primer Paint	Finish Paint
15 ~ 20μ	25 ~ 30μ

4. Painting Working Instructions:

4.1 Work pieces should be surface treated by blast cleaning before primer paint being applied.

4.2 Primer painting dried by air.

4.3 Dust and oil on surface work pieces should be cleaned before finish paint being applied.

4.4 PU finish painting should be dried by baking on, and cooled to room temperature before packing.

4.5 Alkyd finish painting could be dried by baking oven or air, and should be checked by finger before packing.

Earth Tech (Canada) Inc.

Reviewed for general conformance with design intent. Responsibility for detailed design in the shop drawings rests with the Contractor.

Responsibility for verification and correlation of field dimensions, fabrication process, techniques of construction, installation and coordination of all parts of the work rests with the Contractor.

REVIEWED _____

REVIEWED AS MODIFIED _____

REVISE AND RE-SUBMIT _____

NOT REVIEWED _____

Project No. C28/16/79538

Date: 12/9/06 By: [signature]

NO COMMENT

CHEMLINE PRODUCTS

PDF Published June 27, 2006

Type 21 True Union Ball Valves

CHEMLINE Plastics Limited

Your Pipeline To Quality

PVC, CPVC, PP, PVDF

SERIES: Type 21

SIZES: 1/2" – 4"

ENDS: Socket, Threaded, Flanged, Butt, ChemFlare

SEATS: Teflon® PTFE

SEALS: EPDM, Viton®†

The Chemline Type 21 True Union Ball valve incorporates state of the art features and performance. This is a full port, full blocking True Union valve pressure rated at 16 bar (230 psi)*. Double stem o-rings are provided for safety. Pneumatic or electric actuator mounting is easily accomplished in the field – Just pull off the handle to reveal an integral ISO mounting platform. The valve base is designed to easily accept bolts for full support if desired.

230 psi Working Pressure

Easy to Actuate in the Field

Double Stem O-Rings for Safety

Features

Pressure rated to 230 psi
- Provides a high factor of safety

Integral Actuator Mounting Platform
- Actuation is easy. Electric or pneumatic actuators may be mounted in the field

Full Port
- High capacity and low pressure drops

Fully Blocking
- Downstream union nut may be safely disassembled for piping maintenance while valve is closed off under full system pressure

Built-In Spanner Wrench
- Top of the handle is designed to be used as a tool for accessing internal parts

Base Mounting Pad
- The valve base incorporates a mounting pad, enabling the valve with an actuator to be bolted securely to a support

High Chemical Resistant Material
- PVC and CPVC compounds have an "A" chemical resistance rating as per ASTM D-1784. They have outperformed other PVC and CPVC compounds on aggressive chemicals.

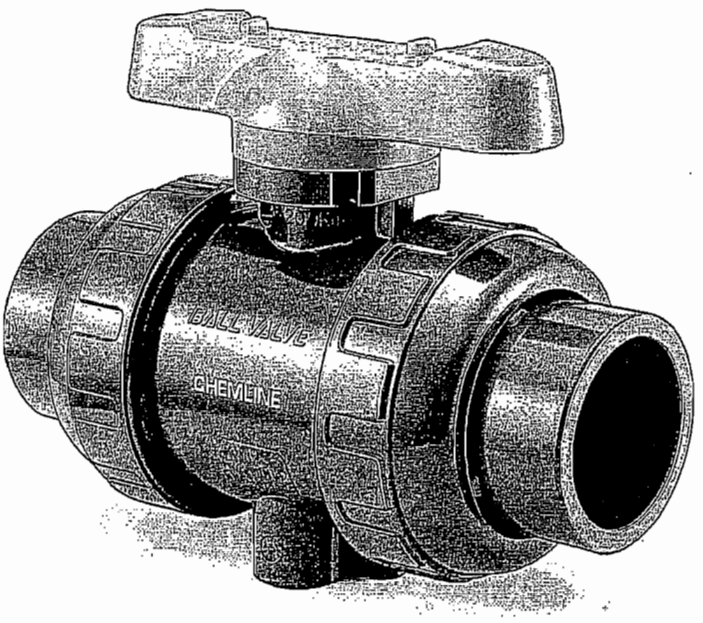

* PVC, CPVC and PVDF 1/2" to 2" are rated at 230 psi; 2-1/2" to 4" and all size PP valves are rated at 150 psi at 20°C.
† Other materials are available special order.

06/06 ©Chemline Plastics Limited 2006
Chemline is a registered trade mark of Chemline Plastics Limited

Type 21 True Union Ball Valves

Double Stem O-Rings for Safety

- Upper o-ring groove is deeper than lower. In case of excessive stem torque, stem will shear at the upper groove, leaving the inner o-ring intact to seal against full line pressure.

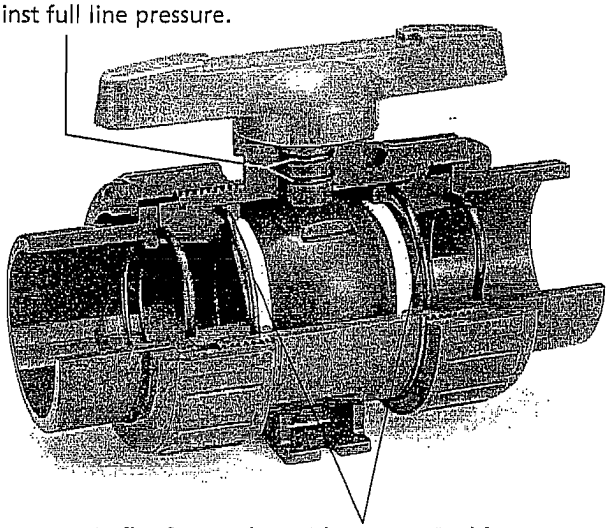

Teflon® Seats have Elastomer Cushions

- Improved sealing while lowering stem torques.
- Self adjusts for seat wear

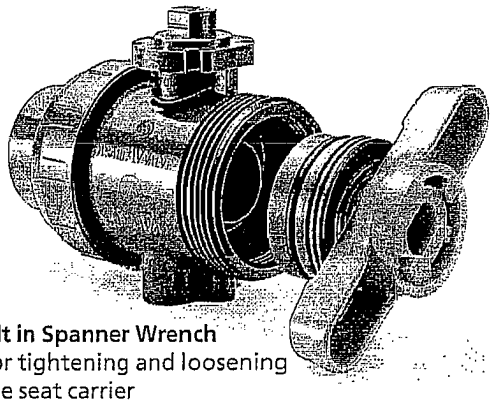

Built in Spanner Wrench

- For tightening and loosening the seat carrier
- All parts are replaceable

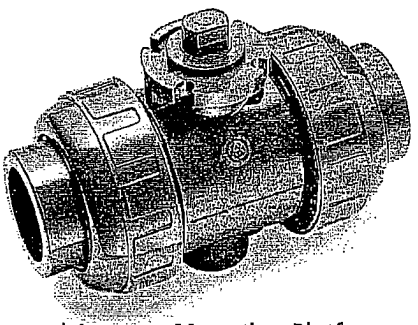

Integral Actuator Mounting Platform

- Actuation is easy. Electric or pneumatic actuators may be mounted in the field. Simply pull off the handle to reveal an ISO standard mounting platform which accepts bolt-on hardware.

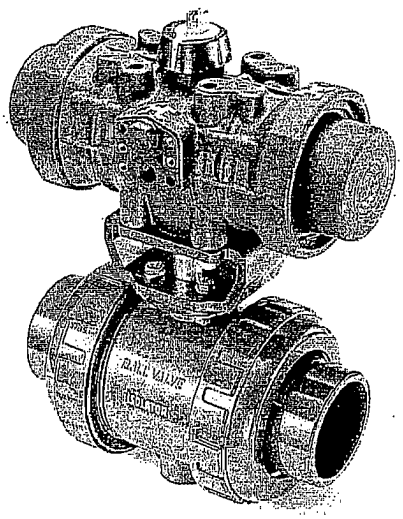

Pneumatic and Electric Actuators

- New PPG plastic actuator mounting brackets are designed for high strength and corrosion resistance

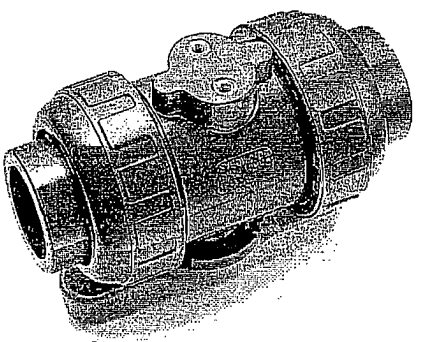

Base Mounting Pad

- Permits actuated valves to be securely anchored
- Valves may be used as fixation points in the piping system

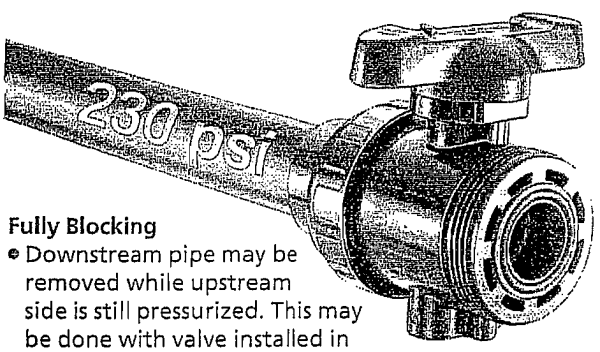

Fully Blocking

- Downstream pipe may be removed while upstream side is still pressurized. This may be done with valve installed in either direction.

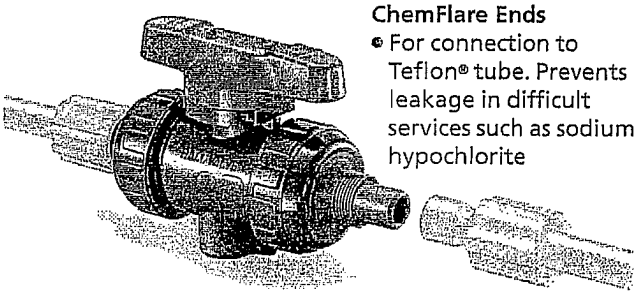

ChemFlare Ends

- For connection to Teflon® tube. Prevents leakage in difficult services such as sodium hypochlorite

Type 21 True Union Ball Valves

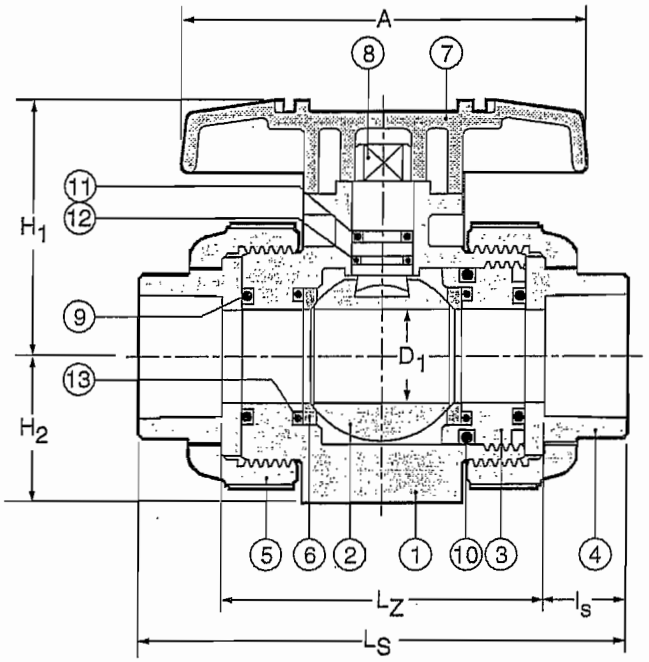

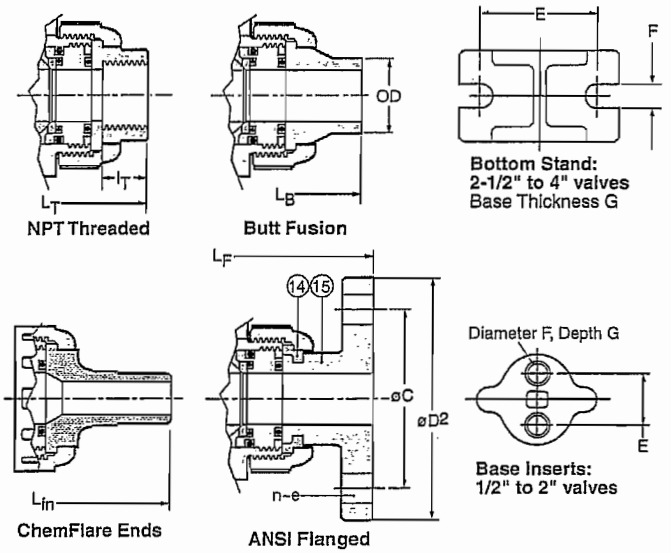

PARTS ▲ Recommended Spare Parts

No.	Part	Pcs.	Materials
1	Body	1	PVC, CPVC, PP, PVDF
2	Ball	1	PVC, CPVC,PP, PVDF
3	Carrier**	1/2	PVC, CPVC, PP, PVDF
4	End Connector	2	PVC, CPVC, PP, PVDF
5	Union Nut	2	PVC, CPVC, PP, PVDF
6▲	Ball Seat	2	PTFE
7	Handle	1	ABS

* EPDM seals standard with PVC, CPVC, PP; Viton® with PVDF valves.
**1 carrier 1/2"- 2", 2 carriers 2-1/2"- 4".
† 2 pcs 1/2"- 2", 6 pcs 2-1/2"- 4".

PARTS ▲ Recommended Spare Parts

No.	Part	Pcs.	Materials
8	Stem	1	PVC, CPVC, PP, PVDF
9▲	Face O-Ring*	2	EPDM, Viton®
10▲	Carrier O-Ring*	2	EPDM, Viton®
11▲	Upper Thicker Stem O-Ring*	1	EPDM, Viton®
12▲	Lower Thinner Stem O-Ring*	1	EPDM, Viton®
13	Seat Cushion*	2	EPDM, Viton®
14	Flange Retainer†	2/6	PVDF
15	Flange	2	PVC, CPVC, PP, PVDF

DIMENSIONS INCHES

Size	D Bore	A	H_1	H_2	End Connections: Socket L_S	Socket Z_S	Socket l_S	Threaded l_T	Threaded L_T	Factory Flanged L_F	Factory Flanged D_2	Factory Flanged C	Butt L_B	Butt OD	ChemFlare L_{fn}	ChemFlare Tube	Valve Base E	Valve Base F*	Valve Base G
1/2"	.59	3.6	2.03	1.14	4.45	2.70	.875	.64	4.02	5.63	3.50	2.38	4.88	.79	6.12	1/2"†	.75	.29	.43
3/4"	.79	3.9	2.34	1.38	5.08	3.08	1.00	.65	4.72	6.77	3.88	2.75	5.67	.98	6.52	3/4"	.75	.29	.43
1"	.98	4.3	2.68	1.54	5.75	3.50	1.13	.81	5.16	7.36	4.25	3.12	6.06	1.26	7.26	1"	.75	.29	.43
1-1/4"	1.22	4.8	3.17	1.85	6.46	5.21	1.25	.85	5.91	7.48	4.62	3.50	6.85	1.57	–	–	1.18	.35	.59
1-1/2"	1.57	5.2	3.50	2.17	7.24	4.49	1.38	.85	6.42	8.35	5.00	3.88	7.64	1.97	–	–	1.18	.35	.59
2"	2.01	6.3	4.02	2.60	8.23	5.23	1.50	1.90	7.76	9.21	6.00	4.75	8.82	2.48	–	–	1.18	.35	.59
2-1/2"	2.28	7.87	4.96	2.83	9.45	5.95	1.75	1.21	8.46	10.20	7.00	5.49	9.72	2.95	–	–	1.89	.35	.23
3"	2.70	9.45	5.51	3.35	11.10	7.35	1.88	1.30	10.39	11.97	7.50	6.00	11.61	3.54	–	–	2.17	.43	.28
4"	3.54	11.81	7.01	4.33	13.88	9.87	2.00	1.38	14.17	14.65	9.00	7.50	14.76	4.33	–	–	2.56	.43	.32

*Optional threaded inserts: 1/2" to 1" valves - UNC 1/4"-20; 1-1/4" to 2" valves - UNC 5/16"-18.
"Recoil" brand inserts require drilling before insertion.
† Tube size can be reduced to 1/4" tube, L_{fn} = 5.52".

Type 21 True Union Ball Valves

WORKING PRESSURES PSI, Water, Non-Shock — **VACUUM RATING** • 29.9 inches mercury

Size	PVC 20°C 68°F	PVC 40°C 104°F	PVC 50°C 122°F	CPVC 20°C 68°F	CPVC 40°C 104°F	CPVC 50°C 122°F	CPVC 60°C 140°F	CPVC 80°C 176°F	CPVC 90°C 194°F	PP 20°C 68°F	PP 60°C 140°F	PP 80°C 176°F	PVDF 20°C 68°F	PVDF 40°C 104°F	PVDF 60°C 140°F	PVDF 80°C 176°F	PVDF 100°C 212°F
1/2"- 2"	230	165	150	230	165	150	120	75	55	150	85	55	230	185	150	110	85
2-1/2" - 4"	150	150	150	150	150	150	120	75	55	150	70	40	150	150	150	110	85

Temperature Ranges: PVC 0 to 60°C (32 to 140°F), CPVC 0 to 95°C (32 to 203°F), PP –20 to 80°C (–4 to 176°F), PVDF –40 to 100°C (–40 to 212°F).

WEIGHTS LB. THREADED or SOCKET — **WEIGHTS** LB. FLANGED

Size	PVC	CPVC	PP	PVDF	PVC	CPVC	PP	PVDF
1/2"	0.37	0.41	0.26	0.43	0.81	0.87	0.69	0.98
3/4"	0.65	0.69	0.45	0.74	1.2	1.3	0.94	1.4
1"	1.00	1.08	0.66	1.19	1.8	1.9	1.4	2.0
1-1/4"	1.4	1.5	0.92	1.7	2.5	2.7	1.9	2.8
1-1/2"	2.2	2.4	1.5	2.5	3.4	3.6	2.8	4.0
2"	3.0	3.3	1.9	3.4	4.7	4.9	3.7	4.4
2-1/2"	5.2	5.6	3.1	6.3	7.4	8.0	6.4	9.3
3"	8.1	8.8	6.1	–	10.9	11.8	9.3	13.5
4"	20.4	22.0	13.4	–	24.0	25.1	22.0	32.0

C_V VALUES VS. BALL ANGLE

Size	0%	25%	50%	75%	100%
1/2"	0	0.35	1.3	5.5	14.
3/4"	0	0.73	2.8	11.5	29.
1"	0	1.2	4.5	18.6	47.
1-1/4"	0	1.8	6.8	28.4	72.
1-1/2"	0	3.9	14.7	61.2	155.
2"	0	4.8	18.0	75.0	190.
2-1/2"	0	9.1	34.7	144.0	365.
3"	0	10.2	39.0	162.0	410.
4"	0	17.0	64.6	269.0	680.

SAMPLE SPECIFICATION

- All True Union Ball Valves in PVC, CPVC, PP or PVDF shall be specified *Chemline Type 21 or equal* sizes 1/2" to 2" in PVC, CPVC, and PVDF rated at 230 psi and in PP 150 psi maximum working pressure. Sizes 2-1/2", 3" and 4" rated at 150 psi maximum working pressure with EPDM , Viton®, CPE, Hypalon, or Nitrile seals. Cushioned Teflon® PTFE ball seats shall be provided for positive closure with minimum stem torques.
- All valve sizes 1/2" to 4" shall be supplied with double stem blowout-proof stem o-rings for safety. The top o-ring groove shall be deeper so that if excessive force is applied it would shear and the lower o-ring would remain intact and the valve will continue to hold pressure.
- All valves shall be full port and two-way blocking.
- Socket ends in PVC and CPVC shall be Schedule 80 and conform to ASTM D-2467.
- Threaded ends shall be Schedule 80 and conform to ASTM D-2464 . PP threaded ends shall have stainless steel reinforcing bands to prevent creep.
- Butt fusion ends in PP or PVDF will be compatible with *Chemline PP or PVDF piping systems.*
- Flanged ends shall be ANSI Class 150 one-piece factory molded using no nipples or fabrication to ensure maximum strength and close tolerance end to end dimensions and eliminating the possibility of joint failures.
- PVC compound shall have an ASTM cell classification 12454-A with a minimum suffix "A" designation for chemical resistance as per ASTM D-1784 (CSA report LO 4000-172).
- All CPVC compound shall have an ASTM cell classification 23567-A with a minimum suffix "A" designation for chemical resistance as per ASTM D-1784.
- PVC and CPVC compound and EPDM seals shall be CSA Standard B137.0 para 5.2.1. environmental requirements for toxicity (CSA Report LO 4000-1459).
- All PP materials are conformed ASTM D-4101 PP 021 B 67272 material requirements.
- All PVDF material shall be unpigmented conforming to ASTM D-3222 Type 2 suspension resin material requirements and also will be USDA Title 21 Chapter 1 Part 177. 2510 requirements for contact with food.
- All valves shall be custom tagged with manufacturers' inspection number to provide traceability.

ORDERING EXAMPLE

Chemline Type 21 True Union Ball Valve	21	A	020	E	S
Body Material	A – PVC, B – PP, C – CPVC, K – PVDF				
Size[1]	002 – 1/4", 003 – 3/8", 005 – 1/2", 007 – 3/4", 010 – 1", 012 – 1-1/4", 015 – 1-1/2", 020 – 2", 025 – 2-1/2", 030 – 3", 040 – 4", 060 – 6"				
Seals	E – EPDM, V – Viton®, C – CPE[2], B – Nitrile[3], A – Aflas				
Ends	S – Socket, T – Threaded, F – Flanged, B – Butt, FN-1 – Chem-Flare				

[1] 1/4" and 3/8" are 1/2" valves reduced. 6" is 4" valve with 6" end connections.
Example: Chemline Type 21 True Union Ball Valve, PVC, 2", with EPDM seals, socket ends.
[2] CPE = Chlorinated Polyethylene. [3] Nitrile is also called "Buna-N".

OPTIONS & ACCESSORIES

- **Alternate O-Ring Seals** – Nitrile, Teflon®, CPE, etc.
- **Electrically Actuated** – Refer to separate data sheets
- **Pneumatically Actuated** – Refer to separate data sheets
- **Stem Extension** made to any length
- **Limit Switches** – For open and/or closed position indication
- **Handle Lockout** – Field mountable
- **Municipal Operating Nut**
- **Lubrication-free Valves** – Factory clean room assembled

CHEMLINE Plastics Limited
55 Guardsman Road, Thornhill, Ontario, Canada, L3T 6L2
Tel: 905-889-7890 info@chemline.com
Fax: 905-889-8553 www.chemline.com

ISO 9001:2000 Certified

Your Pipeline To Quality Valves, Piping, Flow Meters and Controls

PDF Published Feb. 7, 2006

Y Sediment Strainers

CHEMLINE Plastics Limited
Your Pipeline To Quality

PVC*

SERIES: YSA

SIZES: 1/2" – 4"

ENDS: True Union, Threaded, Socket or Flanged

SEALS: EPDM, Viton†

The Chemline YSA Series Y Sediment Strainer is a safety filtration device designed to entrap occasional solid impurities in the line. This is to protect equipment with small orifices such as solenoid valves, and prevent damage to pumps or control valves, etc. The easily replaceable filter screen comes in a choice of meshes. The new YSA Series True Union models have greatly increased filtration areas. Pressure drops are lower and less frequent cleaning is required.

High Capacity

True Union up to 4"

Transparent Body

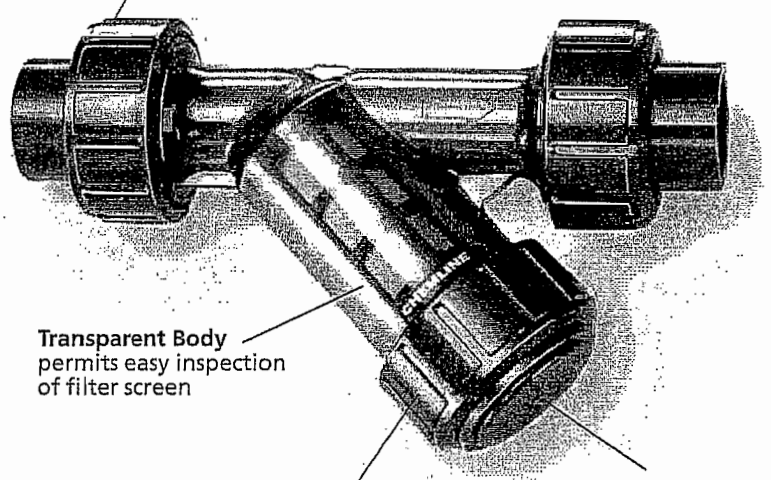

Features

- **Large Filtration Capacity Low Pressure Drops**
  - Diameter of screens are full pipe bore. The effective filtering area is in some sizes **twice the filtering area** of other makes. This results in larger filtration capacities and lower pressure drops.
- **Replaceable Filter Screens**
  - Available with choice of PVC 24, 35 or 55 mesh filter screens
  - 316 SS screens are also available
- **Dual Socket and Threaded Ends**
  - Sizes 1/2"– 2" in PVC are supplied with socket ends plus two free threaded ends in each box

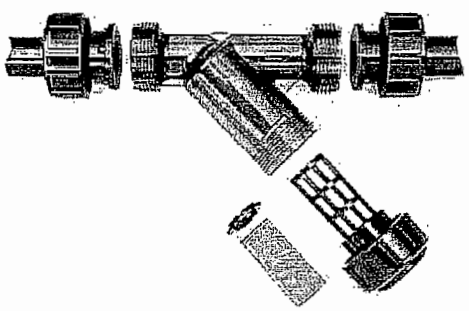

- **Easily Maintained** – All parts are easily replaceable including the body

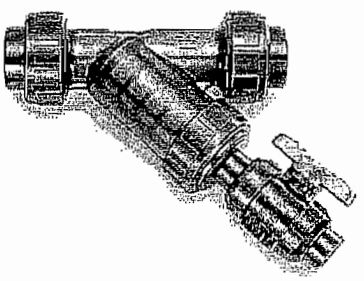

- **Optional Flush Valve**

* Polypropylene and PVDF Strainers are available special order.
† Other seal materials are available special order.

02/06 ©Chemline Plastics Limited 2006
Chemline is a registered trade mark of Chemline Plastics Limited

Y Sediment Strainers

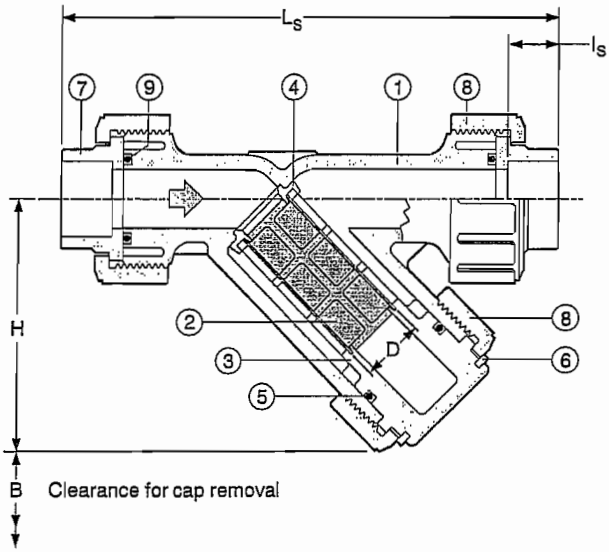

PARTS ▲Recommended Spare Parts

No.	Part	Pcs.	Materials
1	Body	1	PVC
2▲	Filter Screen	1	PVC, 316SS
3	Cap/Filter Cage	1	PVC
4▲	Screen Retainer	1	PVC
5▲	Cap O-Ring	1	EPDM, Viton
6	Split Ring	1	PVC
7	End Connector	2	PVC
8	Union Nut	3	PVC
9▲	Face O-Ring	2	EPDM, Viton

DIMENSIONS INCHES

Size	B	D	H (Closed)	L_T Threaded	L_S Socket	L_F Flanged	l_S Socket	Exposed Screen Area (in²)
1/2"	3.	0.63	2.8	6.38	6.42	8.1	0.69	2.71
3/4"	4.	0.83	3.7	7.87	7.76	10.0	0.72	4.57
1"	5.	1.1	4.0	8.98	8.9	11.1	0.87	5.98
1-1/2"	6.	1.6	5.7	11.61	11.6	13.2	1.09	13.8
2"	7.	2.0	6.6	12.76	12.6	14.2	1.16	20.0
3"	8.	3.1	7.5	17.2	17.8	18.8	1.87	34.0
4"	11.	3.9	10.1	23.5	23.1	23.9	2.00	54.7

NET WEIGHTS LB

Size	Threaded Socket	Flanged
1/2"	0.5	1.0
3/4"	1.0	1.6
1"	1.5	2.4
1-1/2"	3.4	4.6
2"	4.3	6.0
3"	13.7	14.7
4"	30.8	35.1

WORKING PRESSURES PSI

0 - 50°C 32 - 122°F
150
150
150
150
150
85
85

Temperature Range 0 to 60°C (32° to 140°F).

C_V VALUES

USGPM Flow at 1 PSI Pressure Drop
5.2
7.5
14.
34.
50.
110.
165.

With clean 24 mesh screen.

FILTER SCREEN DATA

Equiv. Mesh	Micron Filtration	Hole Area (in²)	Holes per in²	% Open Area
24	690	.00114	135	15.4
35	490	.00053	258	13.7
55	250	.00011	774	8.5

24 mesh is supplied as standard, 35 or 55 mesh supplied on request.

Micron filtration is the smallest diameter of a sphere which will be retained by the mesh.

ORDERING EXAMPLE

Chemline PVC Y Strainer	YSA	020	E	S
Size	005 – 1/2" 007 – 3/4" 010 – 1" 012 – 1-1/4" 015 – 1-1/2" 020 – 2" 030 – 3" 040 – 4" 060 – 6"[1]			
Seals	E – EPDM V – Viton C – CPE[2] B – Nitrile[3] A – Aflas			
Ends	S – Socket T – Threaded F – Flanged			

Example: Chemline PVC Y Strainer, 2", EPDM O-rings, socket ends.

[1]6" is 4" strainer with 6" end connections

[2]CPE = Chlorinated Polyethylene

[3]Nitrile is also called "Buna-N"

OPTIONS

- Alternate O-ring materials
- Flush out valve installed in cap
- 316 Stainless Steel Screens if greater open area is required
- Polypropylene or PVDF Construction – Design is different from YSA Series. Consult Chemline.

CHEMLINE Plastics Limited

55 Guardsman Road, Thornhill, Ontario, Canada, L3T 6L2
Tel: 905-889-7890 info@chemline.com
Fax: 905-889-8553 www.chemline.com

Your Pipeline To Quality Valves, Piping, Flow Meters and Controls

PDF Published June 21, 2006

SB 10/11 Series Back Pressure/ Relief Valves

CHEMLINE Plastics Limited
Your Pipeline To Quality

PVC, PP, PVDF

SERIES: SB10 and SB11

SIZES: 3/8" – 2"

ENDS: True Union Socket or Threaded
Non Union Socket, Threaded, Flanged, Butt (Spigot)†, ChemFlare

CONTROL DIAPHRAGM: Teflon® Bonded EPDM

SEALS: EPDM, Viton®

Manufactured by Stübbe®

The Chemline SB Series Back Pressure/Relief Valve has two functions. As a Back Pressure Valve, installed in-line downstream of a pump, the back pressure below the metering pump is maintained. When installed in the branch of a tee it is a Pressure Relief Valve. The valve stays closed until inlet pressure reaches the set pressure which is adjusted by turning the spring tensioning bolt. Inlet pressure acts on the Teflon® control diaphragm opening the valve, allowing excess pressure to flow downwards through the orifice.

The SB10/11 Series is very sensitive to pressure changes and requires low overpressure to fully open.

Sensitive and Reliable

Designed for Long Life

True Union Ends

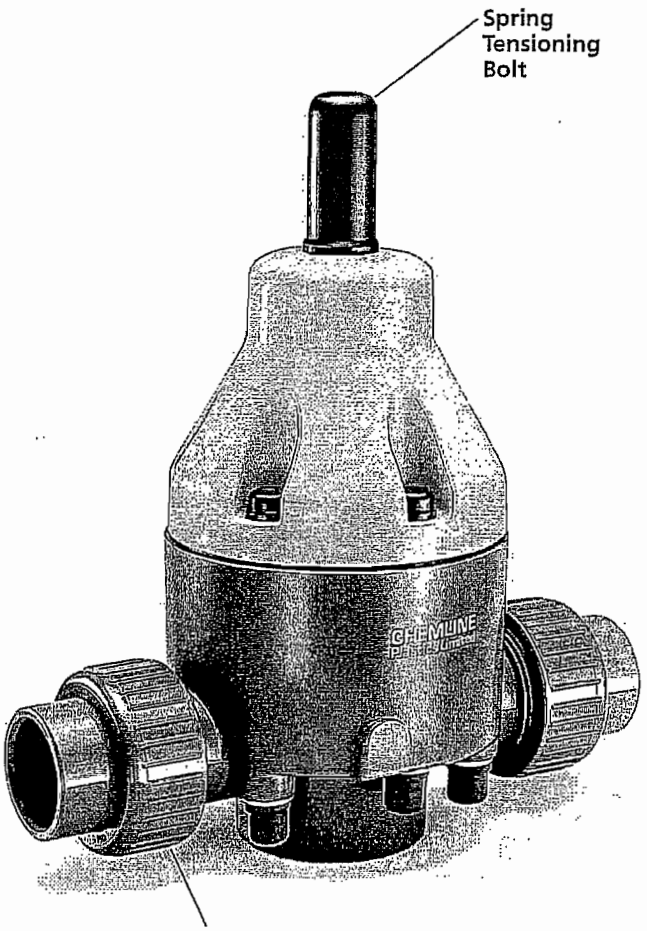

Features

- **Low overpressure to fully open**
- **Sensitive to pressure changes**
- **For clean fluids only** – For dirty fluids use SB12 Series

Set Pressure Ranges:
- SB10 – 3 to 60 psi
- SB11 – 7 to 150 psi

– The only difference between SB10 and SB11 is the strength of spring

Long Cycling Life
- Dynamic seal is Teflon® bonded EPDM for high chemical resistance
- This moulded diaphragm is designed for superior sealing and flex life

Designed for Superior Performance
- Valves are hydraulically designed for minimum hysteresis ("backlash") and to eliminate chatter

† PP and PVDF spigot ends have DIN dimensions and will butt fuse directly to Chemline PP and PVDF piping systems.

6/06 ©Chemline Plastics Limited 2006
Chemline is a registered trade mark of Chemline Plastics Limited

SB 10/11 Back Pressure/Relief Valves

SET PRESSURE RANGES

- SB10 – 3 to 60 psi
- SB11 – 7 to 150 psi

OVER PRESSURE VS. FLOW RATE

The curves show the relationship between the over pressure (inlet pressure above the set pressure) and the approximate flow rate through the valve for water at 20°C (68°F). These values will vary depending on:

- The configuration of the piping and the pressure losses associated with it.
- The fluid if not water at 20°C (68°F).
- Whether the pressure is rising or falling. Hysteresis is approximately 4 psi.

VALVE SIZES 3/8" and 1/2"

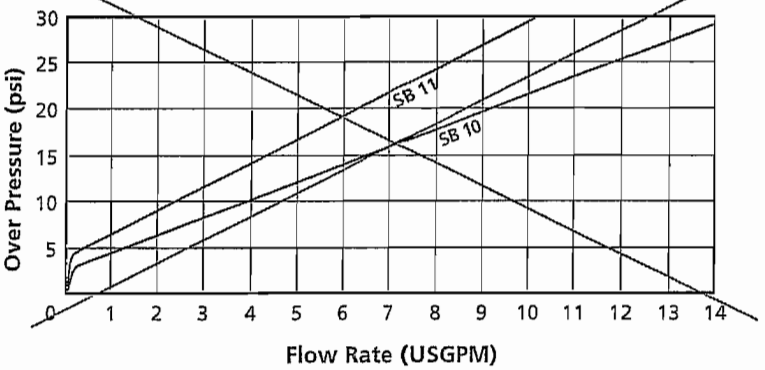

VALVE SIZES 3/4" and 1"

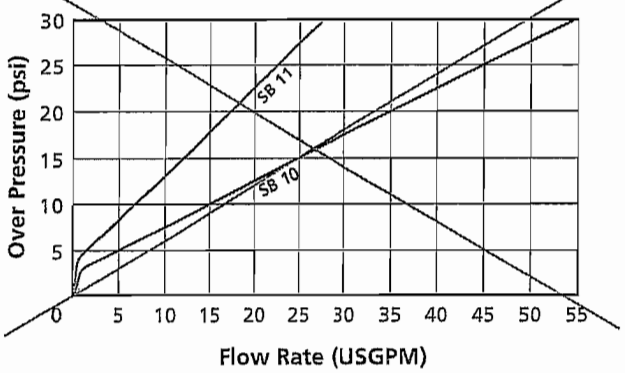

VALVE SIZES 1-1/4", 1-1/2" and 2"

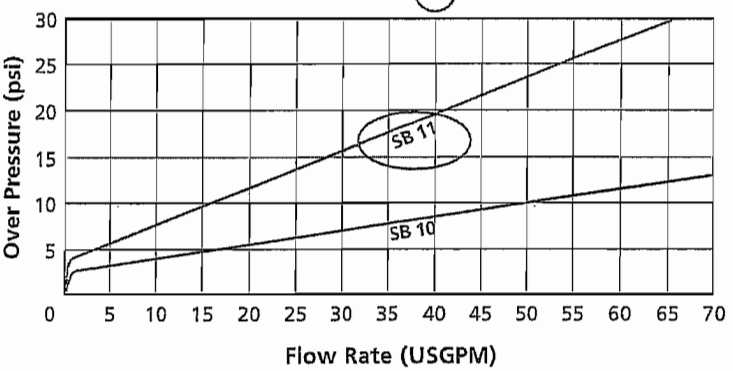

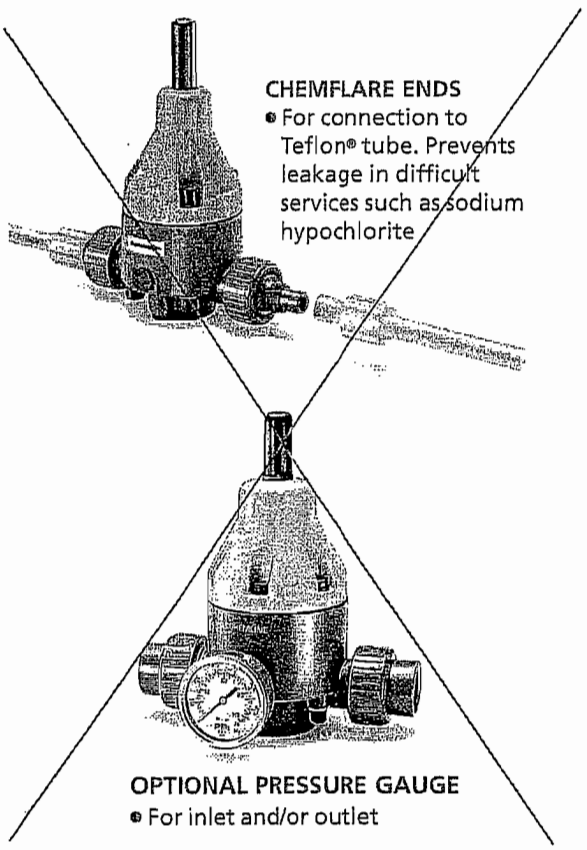

CHEMFLARE ENDS

- For connection to Teflon® tube. Prevents leakage in difficult services such as sodium hypochlorite

OPTIONAL PRESSURE GAUGE

- For inlet and/or outlet

TYPICAL DOSING SYSTEM SCHEMATIC

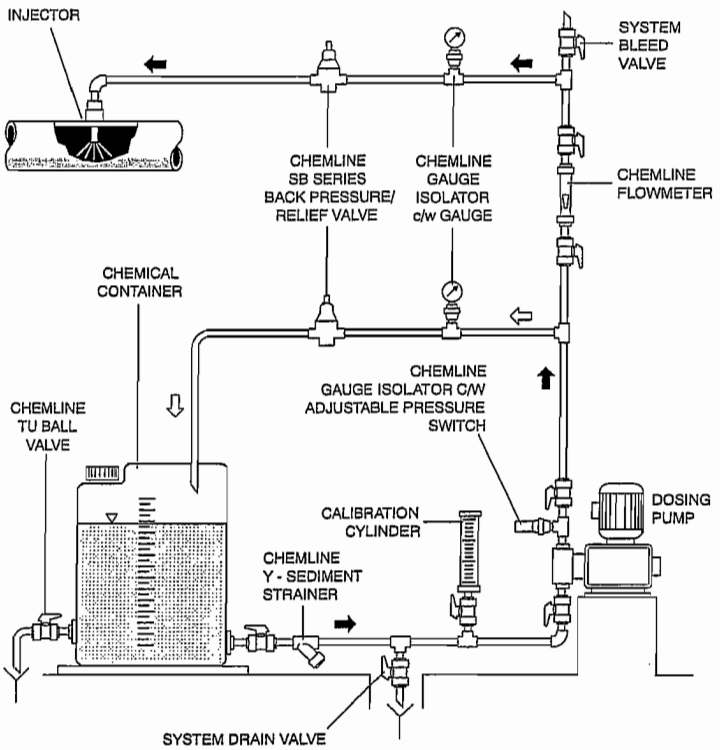

SB 10/11 Back Pressure/Relief Valves

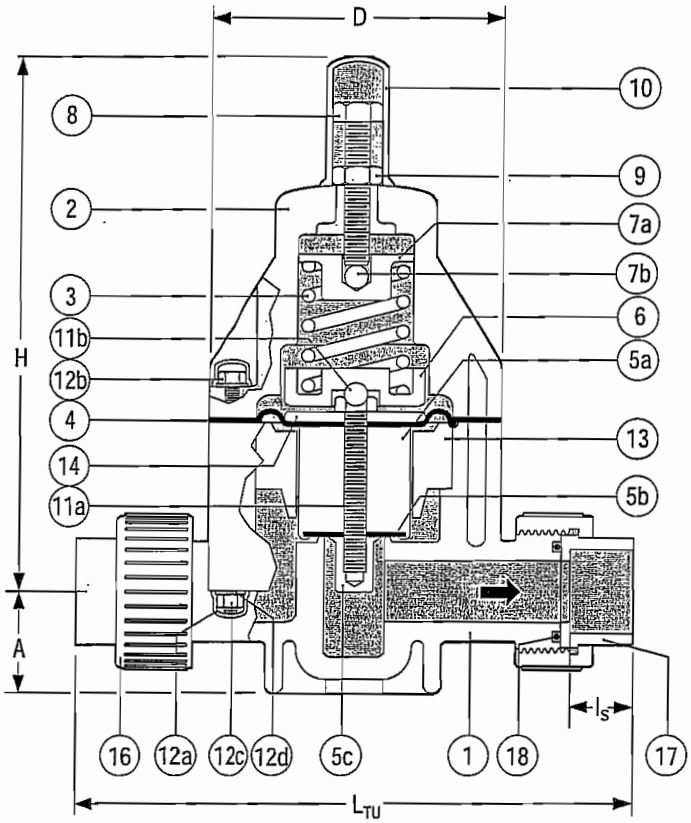

True Union Body

PARTS ▲ Recommended Spare Parts

No.	Part	Pcs.	Materials
1	Body	1	PVC, PP, PVDF
2	Bonnet	1	PPG
3	Spring	1	304 SS
4▲	Control Diaphragm	1	Teflon® PTFE bonded EPDM
5a▲	Piston	1	PVC, PP, PVDF
5b▲	Seat	1	EPDM, Viton
5c▲	Seat Retainer	1	PVC, PP, PVDF
6	Lower Spring Retainer	1	Cad Plated Steel
7a	Upper Spring Retainer	1	Cad Plated Steel
7b	Ball	1	304 SS
8	Spring Tensioning Bolt	1	304 SS
9	Lock Nut	1	304 SS
10	Spring Bolt Cap	1	PE
11a▲	Piston Bolt	1	304 SS
11b	Ball	1	304 SS
12a	Bolt/Nut Cap	8/12*	PE
12b	Hex Bolt	4/6*	304 SS
12c	Hex Nut	4/6*	304 SS
12d	Washer	8/12*	304 SS
13	Spacer Disc	1	PVC, PP, PVDF
14	Pressure Plate	1	Cad Plated Steel
16	Union Nut	2	PVC, PP, PVDF
17	End Connector	2	PVC, PP, PVDF
18▲	Face O-Ring	2	EPDM, Viton

* 1/2" size / 3/4" to 2" sizes

NON UNION ENDS

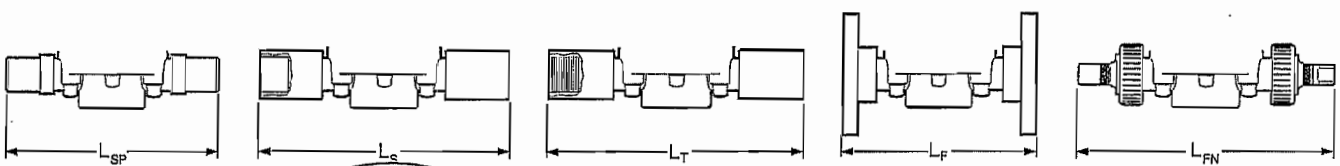

Spigot Body | Socket | Threaded | Flanged | ChemFlare

DIMENSIONS INCHES — **WEIGHTS** LB — **C_V VALUES**

Size	D	H	PVC A	PVC l_s	PVC L_{TU}†	PVC L_{SP}	PVC L_S	PVC L_T	PVC L_F	PVC L_{FN}	PP and PVDF A	PP and PVDF L_{SP}*	PP and PVDF L_{TU}†	PP and PVDF L_{FN}	PVC	PP	PVDF	USGPM Flow at 1 psi ΔP
3/8"	3.2	6.9	1.0	0.6	6.5	5.7	7.4	7.2	4.5	–	0.9	5.7	**	–	1.8	1.5	2.2	2.1
1/2"	3.2	6.9	1.0	0.6	6.8	5.7	8.0	7.8	6.3	8.3‡	0.9	5.7	7.1	8.3‡	1.9	1.6	2.4	3.0
3/4"	4.2	8.0	1.5	0.7	8.3	6.9	9.3	8.9	7.4	9.7	1.4	6.9	8.4	9.7	4.1	3.5	4.6	6.6
1"	4.2	8.0	1.5	0.9	8.5	6.9	9.6	9.3	7.4	10.2	1.4	6.9	8.7	10.2	4.2	3.5	4.7	8.7
1-1/4"	5.8	10.3	2.2	1.0	10.9	8.8	11.6	11.2	9.2	–	2.1	8.8	10.9	–	11.0	9.0	12.0	18.0
1-1/2"	5.8	10.3	2.2	1.2	11.1	8.8	12.2	11.5	9.5	–	2.1	8.8	11.2	–	11.2	9.2	12.2	20.0
2"	5.8	10.3	2.2	1.5	11.3	9.6	12.9	12.0	10.0	–	2.1	9.6	13.2	–	11.4	9.4	12.4	21.4

† True Union Bodies come standard with socket ends. Threaded union ends are available.
* Spigot bodies are used for non union socket, threaded or flanged ends. All spigot ends have DIN dimensions and the PP and PVDF spigots butt fuse directly to Chemline PP and PVDF piping. ** Consult Chemline. ‡ Tube size can be reduced to 1/4" tube, L_{FN} = 7.74".

SB 10/11 Back Pressure/Relief Valves

MAXIMUM PRESSURES PSI

Size	PVC 20°C 68°F	PVC 30°C 86°F	PVC 40°C 104°F	PVC 50°C 122°F	PP 30°C 86°F	PP 40°C 104°F	PP 50°C 122°F	PP 60°C 140°F	PP 70°C 158°F	PVDF 30°C 86°F	PVDF 50°C 122°F	PVDF 70°C 158°F	PVDF 80°C 176°F	PVDF 90°C 194°F	PVDF 100°C 212°F
3/8"	150	105	60	15	150	90	60	37	15	150	100	60	45	30	15
1/2"	150	105	60	15	150	90	60	37	15	150	100	60	45	30	15
3/4"	150	105	60	15	150	90	60	37	15	150	100	60	45	30	15
1"	150	105	60	15	150	90	60	37	15	150	100	60	45	30	15
1-1/4"	150	105	60	15	150	90	60	37	15	150	100	60	45	30	15
1-1/2"	150	105	60	15	150	90	60	37	15	150	100	60	45	30	15
2"	150	105	60	15	150	90	60	37	15	150	100	60	45	30	15

Temperature Ranges: PVC 0 to 50°C (32 to 122°F), **PP** –20 to 70°C (–4 to 158°F), **PVDF** –40 to 100°C (–40 to 212°F).

SAMPLE SPECIFICATION

- All Back Pressure/Relief Valves in PVC, PP or PVDF shall be Chemline SB10 or SB11 Series or equal in sizes 1/2" to 2". SB10 shall have inlet set pressure range of 3 to 60 psi and SB11 shall have an inlet set pressure range of 7 to 150 psi. All valves shall have a maximum inlet pressure rating of 150 psi. Valves shall be suitable for aggressive clean non scaling chemicals.
- Internal spring, spring adjusting bolt and lock nut shall be 304 SS. Adjusting bolt shall be protected with a plastic cap.
- Body fasteners shall be 304 stainless steel with plastic caps.
- All valves shall have a large Teflon coated control diaphragm to fully open at 10-15% over pressure, provide low hysteresis ("backlash") and no flutter.
- Static seals shall be EPDM or Viton.
- Socket ends 1/2" to 2" shall be Schedule 80 and conform to ASTM D-2467.
- Threaded ends 1/2" to 2" shall be Schedule 80 and conform to ASTM D-2464.
- Butt fusion ends in PP and PVDF shall be compatible with Chemline polypropylene and PVDF piping systems.
- Flanged ends shall be ANSI Class 150.
- PVC compound shall have an ASTM cell classification 13463-A, with minimum suffix "A" designation for chemical resistance as per ASTM D-1784.
- All polypropylene material shall conform to ASTM D-4101 PP 0211B67272 material requirements.
- All PVDF material shall be unpigmented conforming to ASTM D-3222 Type 2 suspension resin material requirements and also with USDA Title 21, Chapter I, Part 177.2510 requirements for contact with food.
- All valves shall be custom tagged to provide traceability.

ORDERING EXAMPLE

Chemline Back Pressure/Relief Valve	SB11	A	005	V	U
Pressure Range	SB 10 – 3 to 60 psi SB 11 – 7 to 150 psi				
Body Material	A – PVC B – PP	K – PVDF			
Size	003 – 3/8" 005 – 1/2" 007 – 3/4" 010 – 1" 012 – 1-1/4" 015 – 1-1/2" 020 – 2"				
Elastomers	E – EPDM V – Viton				
Ends	S – Socket T – Threaded F – Flanged U – Union Socket Blank – Spigot (Butt) ChemFlare – FN				

Example: Chemline SB 11 Series, PVC, 1/2" diameter, Viton seals, Union socket ends.

OPTION

- **Integral Pressure Gauge** – for inlet and/or outlet

CHEMLINE Plastics Limited
55 Guardsman Road, Thornhill, Ontario, Canada, L3T 6L2
Tel: 905-889-7890 info@chemline.com
Fax: 905-889-8553 www.chemline.com

Your Pipeline To Quality Valves, Piping, Flow Meters and Controls

PDF Published August 1, 2006

Ball Check & Foot Valves

The economical and versatile Chemline Ball Check Valve is the most popular type of non-return valves for pipe sizes under 6". A wide selection of body and seat materials, and end connections are available for many different applications. It has good flow capacity and will handle many slurry and suspended solid services. This valve works in both horizontal and vertical lines. The Foot Valve is for end of line services such as sumps.

Slip-out Union Ends

Easy Disassembly

Full Port to 4" Size

CHEMLINE Plastics Limited

Your Pipeline To Quality

PVC, CPVC, PP, PVDF

SERIES: BT – True Union Check
BC – Single Union Check
FV – Single Union Foot Valve
FT – True Union Foot Valve

SIZES: 1/2" – 4"

ENDS: Threaded, Socket, Flanged, Butt*

SEAT/SEALS: EPDM, Viton®, Teflon® coated Viton®

CRN CERTIFIED
CONSULT CHEMLINE

Features

- **Built-in Union Design** – For easy installation and maintenance
- **Free Floating Ball** – The only moving part
- **Uniseat/Seal** – Easily removable
- **May be used either horizontally or vertically**
- **Excellent flow characteristics**
- **Low seating and opening pressures**

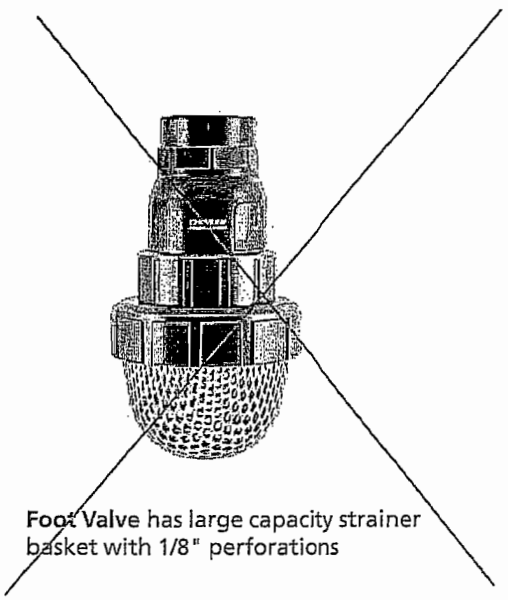

Foot Valve has large capacity strainer basket with 1/8" perforations

True Union Check
1/2" to 2" in all materials

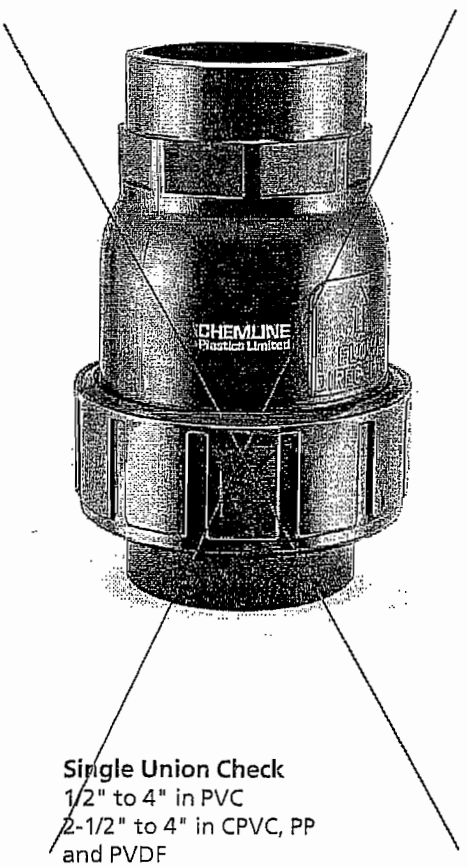

Single Union Check
1/2" to 4" in PVC
2-1/2" to 4" in CPVC, PP and PVDF

* PP and PVDF Butt fusion ends (available 1/2" to 2") connect to Chemline PP and PVDF piping systems.

08/06 ©Chemline Plastics Limited 2006
Chemline is a registered trade mark of Chemline Plastics Limited

Ball Check Valves

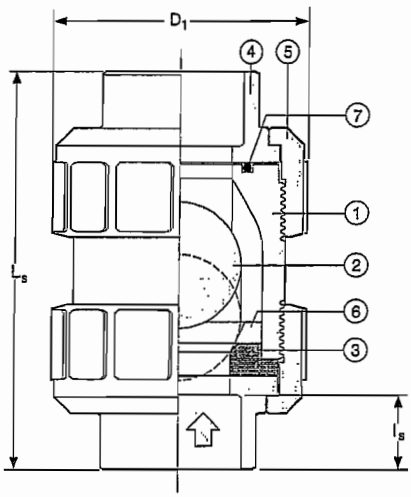

True Union Valve

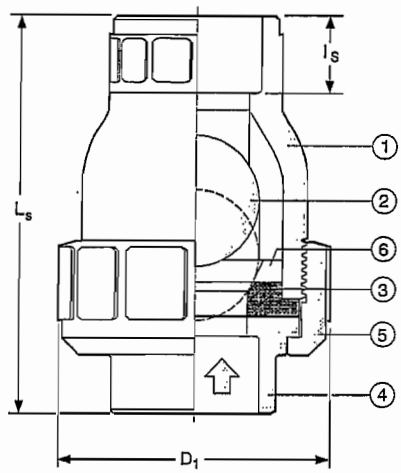

Single Union Valve

PARTS ▲Recommended Spare Parts

No.	Part	Pcs. T/U	Pcs. S/U	Materials
1	Body	1	1	PVC, CPVC, PP, PVDF
2	Ball	1	1	PVC, CPVC, PP, PVDF
3▲	Uniseat/Seal*	1	1	EPDM, Viton®, Teflon® coated Viton®
4	End Connector	2	1	PVC, CPVC, PP, PVDF
5	Union Nut	2	1	PVC, CPVC, PP, PVDF
6	Stop Ring	1	1	PVC, CPVC PP, PVDF
7	Face O-Ring	1	1	EPDM, Viton®
9	Flange Retainer†	2	1	PVDF
10	Factory Flange**	2	1	PVC, CPVC, PP, PVDF

* Standard seals are EPDM in PVC, CPVC and PP valves, Teflon® coated Viton® in PVDF valves. Coating is .002" thick.

† True Union: 2 pcs 1/2" to 2", 6 pcs 1-1/2" to 4"
Single Union: 1 pcs 1/2" to 2", 3 pcs 2-1/2" to 4".

**True Union flanged valves have two factory flanges. Single Union valves have one factory flange and one fabricated flange.
Consult Chemline for details on fabricated type.

UNION END CONNECTIONS

NPT Threaded

Butt Fusion
PP and PVDF

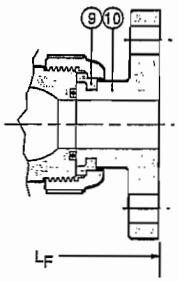

Factory Flanged

DIMENSIONS INCHES — **WEIGHTS** LB

Size	D_1	I_s	I_T	True Union PVC & CPVC L_T	True Union PVC & CPVC L_S	True Union PVC & CPVC L_F	True Union PP & PVDF L_T	True Union PP & PVDF L_B	True Union PP & PVDF L_F	Single Union PVC L_T	Single Union PVC L_S	Single Union PVC L_F	True Union - Socket or Butt PVC	True Union - Socket or Butt CPVC	True Union - Socket or Butt PP	True Union - Socket or Butt PVDF	Single Union PVC
1/2"	1.9	0.69	0.59	3.4	3.4	5.1	3.4	4.0	5.1	3.2	3.4	5.6	0.3	0.3	0.2	0.3	0.2
3/4"	2.4	0.72	0.67	4.1	3.9	6.1	4.1	4.4	6.1	3.8	3.7	6.6	0.5	0.5	0.3	0.6	0.4
1"	2.8	0.88	0.79	4.5	4.4	6.5	4.5	4.8	6.5	4.2	4.3	7.3	0.7	0.8	0.4	0.9	0.6
1-1/4"	3.1	0.94	0.87	5.0	4.9	6.6	5.0	5.9	6.6	6.2	6.3	12.3	1.1	1.2	0.7	1.5	1.5
1-1/2"	3.7	1.09	0.98	5.9	5.9	7.6	5.9	5.8	7.6	5.6	5.7	9.1	1.6	1.7	1.0	2.0	1.3
2"	4.2	1.16	1.10	7.0	6.8	8.4	7.0	6.5	8.4	6.5	6.5	10.5	2.2	2.4	1.4	2.7	1.8

DIMENSIONS INCHES — **WEIGHTS** LB

Size	D_1	I_s*	I_T	Single Union PVC & CPVC L_T	Single Union PVC & CPVC L_S	Single Union PVC & CPVC L_F	Single Union PP & PVDF L_T	Single Union PP & PVDF L_B	Single Union PP & PVDF L_F	Single Union PVC	Single Union CPVC	Single Union PP	Single Union PVDF
2-1/2"	6.0	2.10	2.17	10.0	10.4	14.3	8.7	*	*	5.7	6.2	*	*
3"	6.0	1.88	1.38	8.7	9.6	12.2	8.7	*	*	5.1	5.5	3.3	6.3
4"	8.3	2.00	1.77	12.1	12.2	15.0	12.1	*	*	12.7	13.9	8.1	15.7

* Consult Chemline.

Ball Check & Foot Valves

WORKING PRESSURES PSI

Size	PVC	CPVC				Polypropylene			PVDF			
	0 - 50°C 32 - 122°F	0 - 50°C 32 - 122°F	60°C 140°F	80°C 176°F	90°C 194°F	–20 - 30°C –4 - 90°F	60°C 140°F	80°C 176°F	–20 - 60°C –4 - 140°F	80°C 176°F	90°C 194°F	100°C 212°F
1/2"	150	150	115	85	60	150	90	60	150	120	110	85
3/4"	150	150	115	85	60	150	90	60	150	120	110	85
1"	150	150	115	85	60	150	90	60	150	120	110	85
1-1/4"	150	150	115	85	60	150	90	60	150	120	110	85
1-1/2"	150	150	115	85	60	150	90	60	150	120	110	85
2"	150	150	115	85	60	150	90	60	150	120	110	85
2-1/2"	100	100	90	60	45	100	60	45	100	90	60	45
3"	100	100	90	60	45	100	60	45	100	90	60	45
4"	100	100	90	60	45	100	60	45	100	90	60	45

Maximum Temperatures: PVC 0 to 60°C (32 to 140°F), CPVC 0 to 95°C (32 to 203°F), PP –20 to 90°C (–4 to194°F), PVDF –40 to 100°C (–40 to 212°F).

MINIMUM SEATING AND OPENING PRESSURE PSI

Size	Vertical Piping		Horizontal Piping		C_V VALVES Check Valves
	Open	Seating	Open	Seating	
1/2"	0.7	2.8	0.1	2.8	6.5
3/4"	0.7	4.3	0.1	4.3	17.
1"	0.7	4.3	0.1	4.3	25.
1-1/4"	1.4	4.3	0.3	4.3	86.
1-1/2"	1.4	4.3	0.3	4.3	86.
2"	1.4	4.3	0.3	4.3	130.
2-1/2"	1.4	2.8	0.3	2.8	280.
3"	1.4	2.8	0.3	2.8	280.
4"	1.4	2.8	0.3	2.8	500.

VACUUM RATING

- 29.9 inches mercury

SAMPLE SPECIFICATION

– All Ball Check valves in PVC, CPVC, PP or PVDF shall be Chemline BT or BC Series or equal with EPDM (Viton® or Teflon® coated Viton®) seats and union ends. Sizes 1/2" to 2" shall be slip-out True Union style, sizes 2-1/2" to 4" shall be single union. The elastomer uniseat/seal shall function as both the ball seat and the union seal. Ball Check valves shall be rated 150 psi up to 2" and 100 psi for sizes 2-1/2" to 4".

ORDERING EXAMPLE

	BT	A	020	E	S
Valve Type	BT – True Union Ball Check BC – Single Union Ball Check FV – Single Union Foot Valve FT – True Union Foot Valve				
Body Material	A – PVC C – CPVC B – PP K – PVDF				
Size	005 – 1/2" 007 – 3/4" 010 – 1" 012 – 1-1/4" 015 – 1-1/2 020 – 2" 025 – 2-1/2" 030 – 3" 040 – 4"				
Seals	E – EPDM V – Viton® T – Teflon® coated Viton®				
Ends†	S – Socket T – Threaded F – Flanged B – Butt				

Example: Ball Check Valve, PVC, 2", with EPDM seat, socket ends.

OPTIONS & ACCESSORIES

- **Teflon® coated Uniseat/Seal**
- **Spring Loaded Ball** – Assists ball to seat faster

CHEMLINE Plastics Limited
55 Guardsman Road, Thornhill, Ontario, Canada, L3T 6L2
Tel: 905-889-7890 info@chemline.com
Fax: 905-889-8553 www.chemline.com

ISO 9001:2000 Certified

Your Pipeline To Quality Valves, Piping, Flow Meters and Controls

Q Series Electric Actuators

CHEMLINE Plastics Limited
Your Pipeline To Quality

for Chemline Ball Valves up to 3" and Butterfly Valves to 4"

SERIES: QA – 150 in.-lb.
QB – 300 in.-lb.

VOLTAGES: 12, 24, 115 or 220 VAC
12 or 24 VDC

ENCLOSURE: High Impact "Zytel" Plastic
NEMA Type 4X

The Chemline Q Series Electric Actuator is a reversible rotary unit with output torques of 150 or 300 in.-lb. These units are ideal for all Chemline ball valves up to 3" size, as well as butterfly valves up to 4". The Q Series is compact, light weight and has a plastic housing. A large red handle provides manual override and position indicator.

Q Series is one in a range of actuators specially selected for Chemline ball and butterfly valves. Hardware kits are available for mounting of actuators in the field. Chemline also offers complete actuated valves, fully assembled and bench tested.

Visual Position Indicator

Manual Override

Plastic Housing

Declutchable Manual Override/
Position Indicator

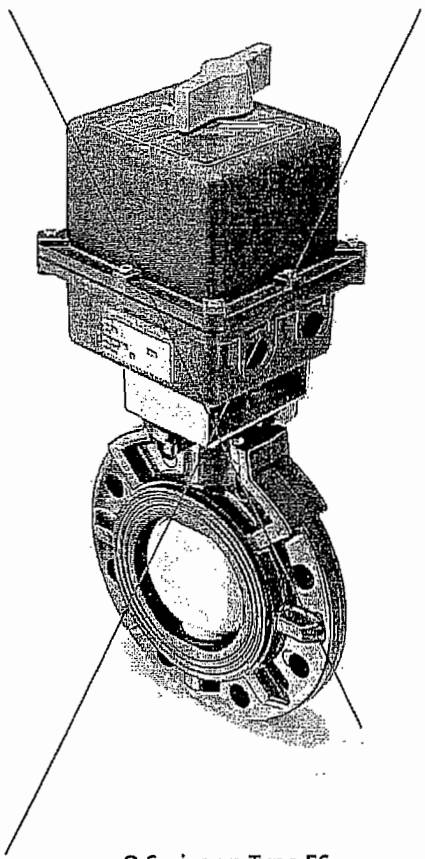

Q Series on Type 56
Butterfly Valve

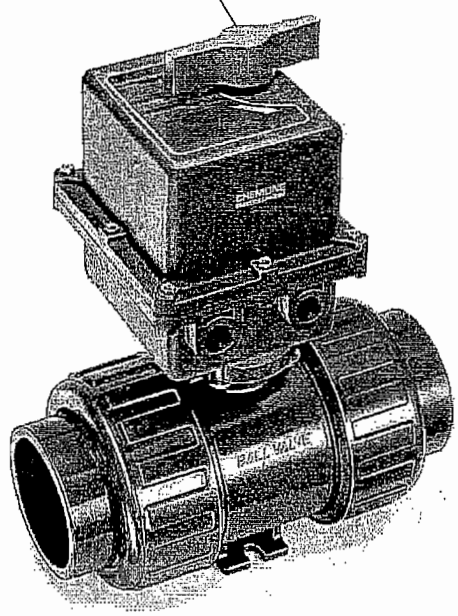

Q Series on Type 21 ISOLATOR
True Union Ball Valve

Features

Large Selection of Options and Accessories

- **Approved by CSA** (Canadian Standards Association)
- **Compact and Light Weight**
  Ideal for plastic and metal valves
- **NEMA Type 4X Plastic Housing**
  Waterproof housing of high impact Zytel† plastic and stainless steel fasteners
- **Reversible** – Turns valve stem back and forth for quick response in cycling applications
- **Minimum 75% Duty Cycle**
  For high cycling applications

No Maintenance

- Permanently lubricated gear train
- Unit is designed for minimum life of 250,000 cycles

Standard Mounting Dimensions

- ISO mounting bolt circle

† Zytel FR-50 is a flame retardant 25% glass reinforced high strength polyamide (Nylon) resin from DuPont.

Q Series Electric Actuators

SPECIFICATIONS

Model	Torques (in-lbs..)	115 VAC (1) Amp Draw	115 VAC (1) Duty Cycle	220 VAC (2) Amp Draw	220 VAC (2) Duty Cycle	12 VDC (3) Amp Draw	12 VDC (3) Duty Cycle	24 VDC (4) Amp Draw	24 VDC (4) Duty Cycle	12 VAC (5) Amp Draw	12 VAC (5) Duty Cycle	24 VAC (6) Amp Draw	24 VAC (6) Duty Cycle	Cycle Time/90° (sec.)	Weight (lbs.)
~~QAx~~	~~150~~	~~0.50~~	~~100%~~	~~0.80~~	~~100%~~	~~2.0~~	~~75%~~	~~4.0~~	~~75%~~	~~2.0~~	~~75%~~	~~4.0~~	~~75%~~	~~5~~	~~6.6~~
QBx	300	0.75	75%	0.80	75%	2.0	75%	4.0	75%	2.0	75%	4.0	75%	5	6.6

Current draw values are for actuators with rotors locked. Duty cycles are for ambient temperature (73°F).

AC WIRING

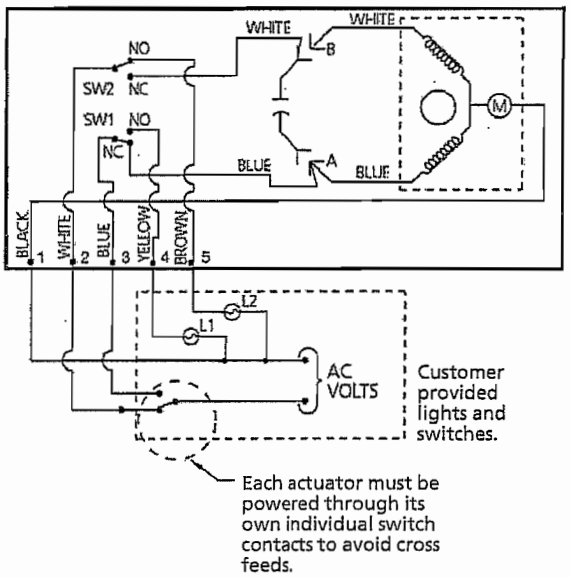

VALVE OPERATION

1. Black – Neutral
   To Open – Power to White (Terminal 2)
   To Close – Power to Blue (Terminal 3)
   L1 – Possible Customer Equipment
   L2 – Possible Customer Equipment

NOTES:

1. Actuator shown in counter clockwise extreme of travel, or 'open' position.
2. Motor has a thermal protector as shown by Ⓜ in the diagram.

DIMENSIONS INCHES

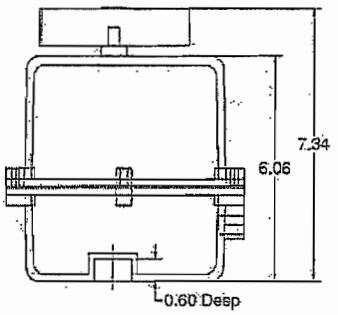

Side View

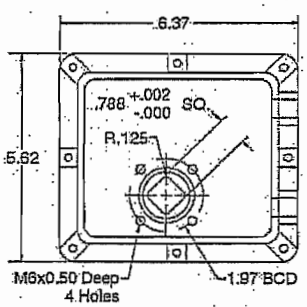

Bottom View

CONTROL ACCESSORIES

- **Extra Limit Switches** – For position feedback
- **Heater/Thermostat** – For outdoor or humid environments. Maintains internal temperature of actuator at 5°C (40°F).
- **3-Position Control** – For 3-way ball valves or dribble control on 2-way valves
- **Positioner** – On-board control package accepts 4-20 mA input (or 0 to 10 VDC) input for proportional control.
- **4 to 20 mA Output Source** – A circuit board coupled with a feedback potentiometer allows a 4 to 20 mA output signal to be used with other equipment.
- **Failsafe Capability** – Backup battery pack/control board is available.
- **Feedback Potentiometer** – To feedback the precise valve position to a remote location,or to allow "jogging" control.
- **Cycle Length Control Module** – For extended cycle times, this control module can permit field adjustments of cycle times up to ten minutes.
- **Two-Wire Control** – For retrofitting solenoids or for direct wiring timers, level switches, etc.
- **Mechanical Brake** – To eliminate oscillation when seating butterfly valves or large ball valves.
- **Bus System Capability** – Consult Chemline for more information.

ACCESSORIES WIRING

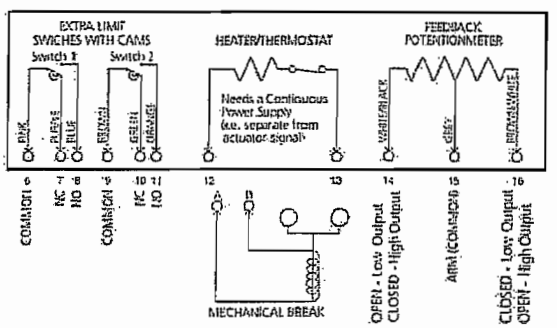

CHEMLINE Plastics Limited
55 Guardsman Road, Thornhill, Ontario, Canada, L3T 6L2
Tel: 905-889-7890 info@chemline.com
Fax: 905-889-8553 www.chemline.com

Your Pipeline To Quality Valves, Piping, Flow Meters and Controls

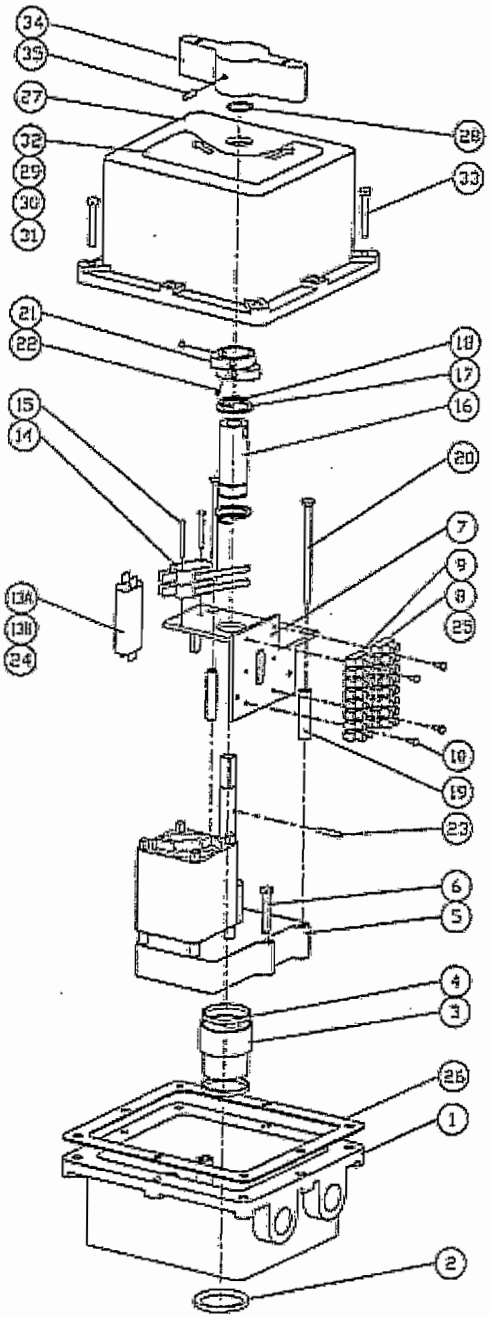

ITEM	QTY	DESCRIPTION
1	1	BASE
2	1	BASE SEAL
3	1	OUTPUT COUPLING
4	2	COUPLING GASKET
5	1	MOTOR
6	2	MOTOR SCREW
7	1	BASE PLATE
8	1	TERMINAL BLOCK 1-8
9	1	TERMINAL BLOCK 9-16
10	4	TERMINAL BLOCK SCREW
13A	1	4.2 MFD CAPACITOR - A94
13B	1	6.7 MFD CAPACITOR - B94
14	2	LIMIT SWITCH
15	2	LIMIT SWITCH SCREW
16	1	OUTER SHAFT
17	2	OUTER SHAFT GASKET
18	2	RETAINING RING
19	2	STANDOFF
20	2	BASE PLATE SCREW
21	2	CAM
22	4	CAM SCREW
23	1	PIN
24	1	2 PC HARNESS
25	1	4 PC HARNESS
26	1	BASE GASKET
27	1	COVER
28	1	COVER SEAL
29	1	WIRE DIAGRAM LABEL
30	1	OPTION LABEL
31	1	DM II LABEL
32	1	OVERRIDE LABEL
33	8	COVER SCREW
34	1	HANDLE
35	1	HANDLE SCREW
36	1	DM II BOX

NOTE:
1. LOCATE ITEM 29 & 30 ON INSIDE SURFACES OF COVER (ITEM 27).
2. LOCATE ITEM 31 ON OUTSIDE BACK SURFACE OF COVER (ITEM 27).

THIS DRAWING AND ALL INFORMATION HEREON IS THE PROPERTY OF ASAHI/AMERICA. ANY COPYING, REPRODUCTION OR UNAUTHORIZED USE IS FORBIDDEN WITHOUT WRITTEN CONSENT.

	NAME	DATE
DR	D CAMERON	9/13/01
APPD	DAVE HURLEY	9/13/01
PROD	LEO LESTER	9/13/01
WO#/SO#		
FILE	ACAD11/OM	

Chemline Plastics Inc.

Q-Series Exploded View

SIZE	DWG. NO.	REV
A	QACT	0

SCALE NTS SHEET 1 OF 1

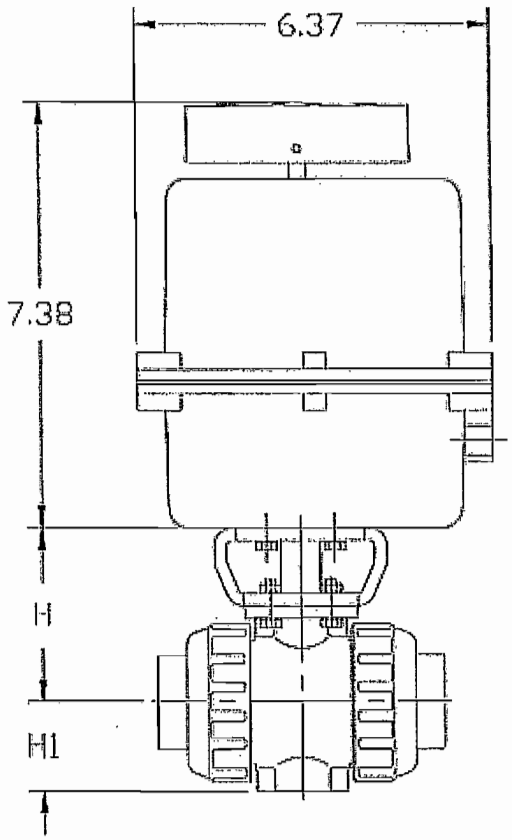

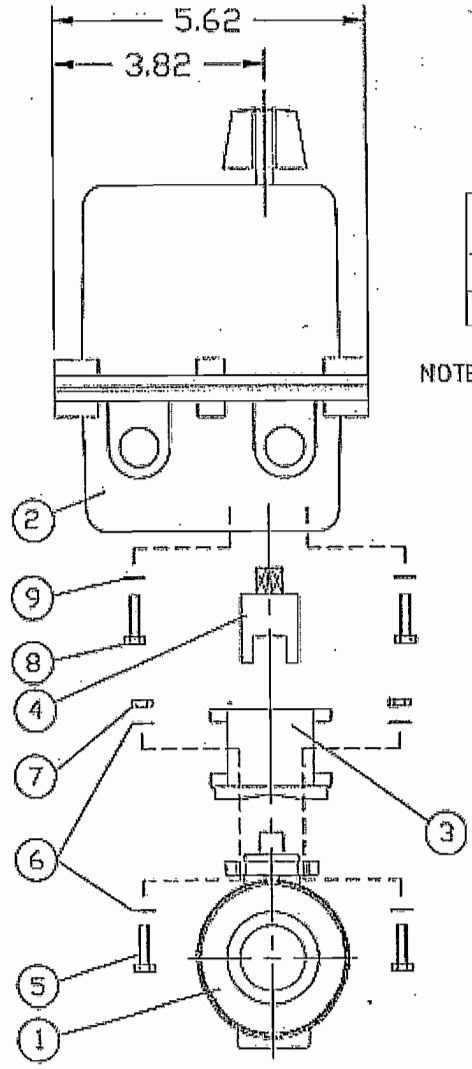

UNIT: INCH

VALVE SIZE	1/2"	3/4"	1"	1-1/4"	1-1/2"	2"
H	2.76	3.01	3.29	3.64	3.98	4.43
H1	1.14	1.38	1.54	1.85	2.17	2.60

NOTE. The shape and appearance of assembly differ a little with nominal size compared to this drawing.

ITEM	DESCRIPTION	MATERIAL	QTY
9	FLAT WASHER (M6.0)	STAINLESS STEEL	4
8	BOLT (M6.0x1-16LG)	STAINLESS STEEL	4
7	NUT (FOR 1/2" THRU 1-1/4" : M5.0x8) (FOR 1-1/2" THRU 2" : M6.0x1)	STAINLESS STEEL	4
6	FLAT WASHER (FOR 1/2" THRU 1-1/4" : M5.0) (FOR 1-1/2" THRU 2" : M6.0)	STAINLESS STEEL	8
5	BOLT (FOR 1/2" THRU 1-1/4" : M5.0x8-16LG) (FOR 1-1/2" THRU 2" : M6.0x1-20LG)	STAINLESS STEEL	4
4	COUPLING	STAINLESS STEEL 303	1
3	MOUNTING BRACKET	PPG	1
2	ACTUATOR SERIES 94	ZYTEL	1
1	BALL VALVE TYPE 21	PVC,CPVC,PP,PVDF	1

THIS DRAWING AND ALL INFORMATION HEREON IS THE PROPERTY OF ASAHI/AMERICA. ANY COPYING, REPRODUCTION OR UNAUTHORIZED USE IS FORBIDDEN WITHOUT WRITTEN CONSENT.

	NAME	DATE
DR	KENICHI MIYAZAKI	8/2/01
APPD	DAVE HURLEY	8/2/01
PROD	LEO LESTER	8/2/01
WO#/CO#		
FILE		

CHEMLINE PLASTICS

Q-SERIES ACTUATOR ON TYPE-21 BALL VALVE 1/2" TO 2"

SIZE	DWG. NO.	REV
A	0106BV	A

SCALE NTS SHEET 1 OF 1

WIRING DIAGRAM FOR 115 VAC AND 220 VAC ONLY

ACTUATOR SHOWN IN COUNTER-CLOCKWISE EXTREME OF TRAVEL, OR "OPEN" POSITION

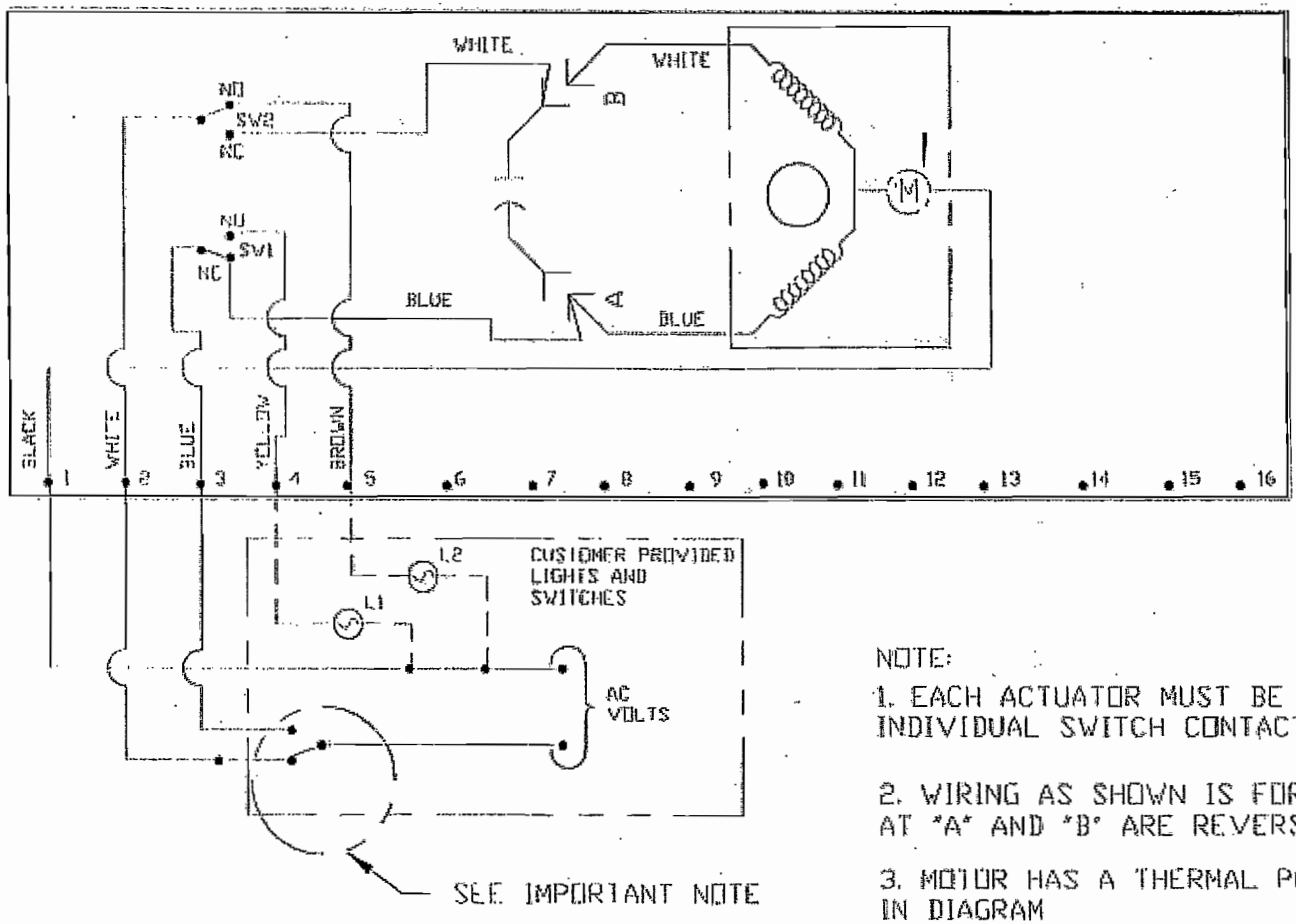

NOTE:

1. EACH ACTUATOR MUST BE POWERED THRU ITS OWN INDIVIDUAL SWITCH CONTACTS TO AVOID CROSS FEED

2. WIRING AS SHOWN IS FOR AA & AB MOTOR LEADS AT "A" AND "B" ARE REVERSABLE FOR AC AND AD

3. MOTOR HAS A THERMAL PROTECTOR AS SHOWN BY (M) IN DIAGRAM

THIS DRAWING AND ALL INFORMATION HEREON IS THE PROPERTY OF ASAHI/AMERICA. ANY COPYING, REPRODUCTION OR UNAUTHORIZED USE IS FORBIDDEN WITHOUT WRITTEN CONSENT.

	NAME	DATE
DR	KENICHI MIYAZAKI	8/3/01
APPD	DAVE HURLEY	8/3/01
PROD	LEO LESIER	8/3/01
WO#/CO#		
FILE		

CHEMLINE PLASTICS INC.

A- & Q-SERIES WIRING DIAGRAM - 120/220VAC

SIZE	DWG. NO.	REV
A	00431.	A

SCALE NTS SHEET 1 OF 1

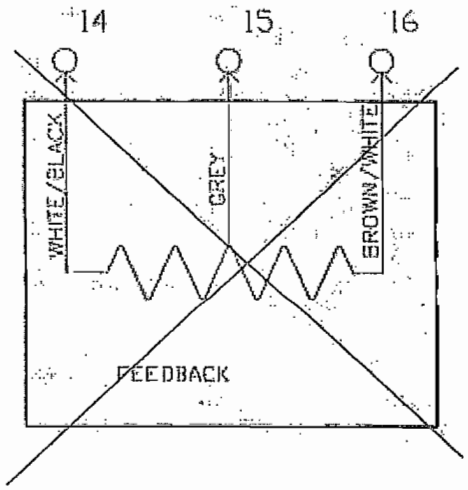

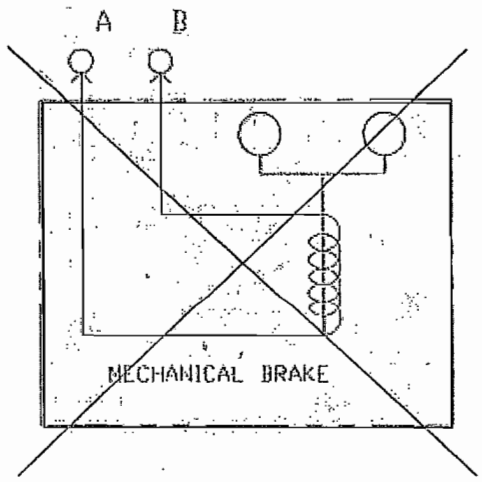

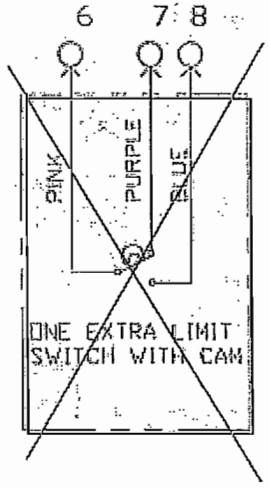

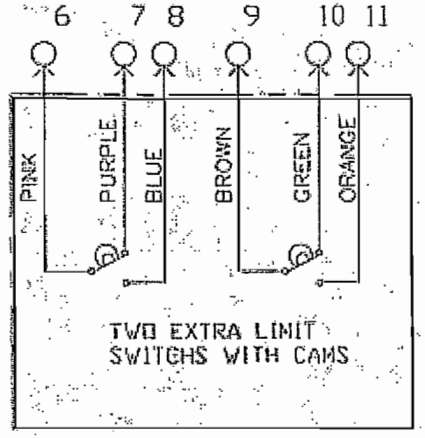

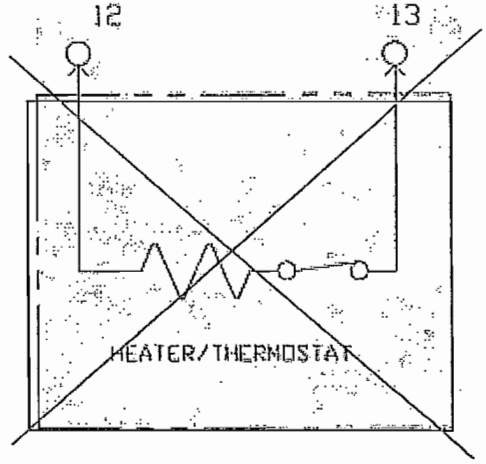

THIS DRAWING AND ALL INFORMATION HEREON IS THE PROPERTY OF ASAHI/AMERICA. ANY COPYING, REPRODUCTION OR UNAUTHORIZED USE IS FORBIDDEN WITHOUT WRITTEN CONSENT.

	NAME	DATE
DR	KENICHI MIYAZAKI	8/3/01
APPD	DAVE HURLEY	8/3/01
PROD	LEO LESTER	8/3/01
WO#/CO#		
FILE		

CHEMLINE PLASTICS

A- & Q-SERIES WIRING DIAGRAM - OPTIONS

SIZE	DWG. NO.	REV
A	0042EL	A

SCALE NTS SHEET 1 OF 1

Troubleshooting

Local Remote Station

Troubleshooting

What if there is no output, but the motor runs?

1. Manual override engaged. Disengage.
2. Valve stem broken. Replace stem as per appropriate valve IOM Manual.

What if valve does not cycle?

1. No power source to actuator. Check for power.
2. Power source disconnected. Check for broken wire, loose connection or no connection as per appropriate wiring diagram.
3. Mechanical brake jammed or misaligned. Check alignment of brake assembly.

What if there is water and/or moisture inside of the unit?

1. Conduit fitting installed improperly. Re-install correctly.
2. Base gasket damaged or installed improperly. Check gasket and replace if necessary.
3. Temperature swings of more than 15 degrees F. Install heater and thermostat to eliminate condensation.
4. Unit has been submerged. Raise unit above liquid level.

What if unit is oscillating?

1. Valve torque exceeds output torque of actuator. Check for chemical compatibility of valve, and flange torque.

What if motor hums and no output is observed?

1. Foreign material caught in valve. Remove material and inspect valve for damaged and/or worn parts. Replace parts as necessary.
2. Unit wired incorrectly (simultaneously powering open and closed). Check wiring as per appropriate wiring diagram.
3. Capacitor worn. Replace.

What if actuator "over-shoots" limit switches without stopping?

1. Actuators wired in parallel to each other. Please note that each actuator requires it's own individual power source.

What if thermal overload frequently cuts out motor?

1. Frequency of operation exceeds duty cycle rating. Check cycling period.
2. Unit is oscillating. Refer to above.

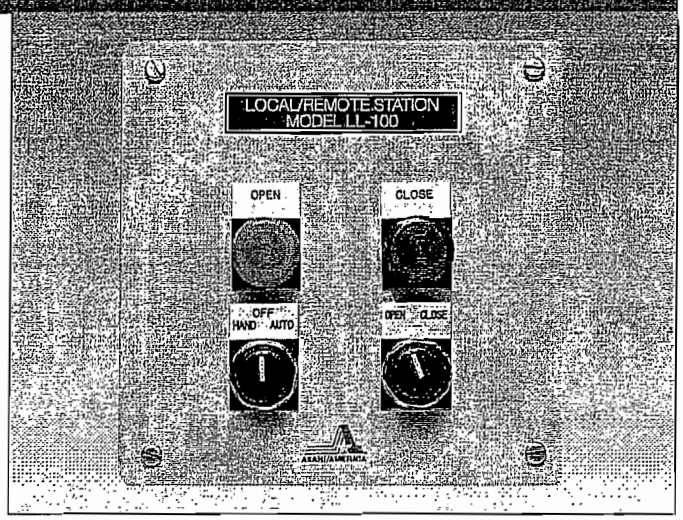

Standard Features

- Visual Light Indication
- NEMA 4X Enclosure Constructed of Fiberglass Polyester
- Stainless Steel Trim
- Captive Cover Gasket
- Captive Cover Screws
- Two (2) Position Selector Switch (open and close)
- Three (3) Position Selector Switch (hand, off, auto)
- 40°F - 266°F Temperature Range
- Can be used with any Electric Actuator (must specify before placing order)

Options

- NEMA 7 Enclosure
- 316 Stainless Steel Enclosure
- Additional Terminal Block for Position Confirmation to PLC
- Contact Factory for Specific Applications

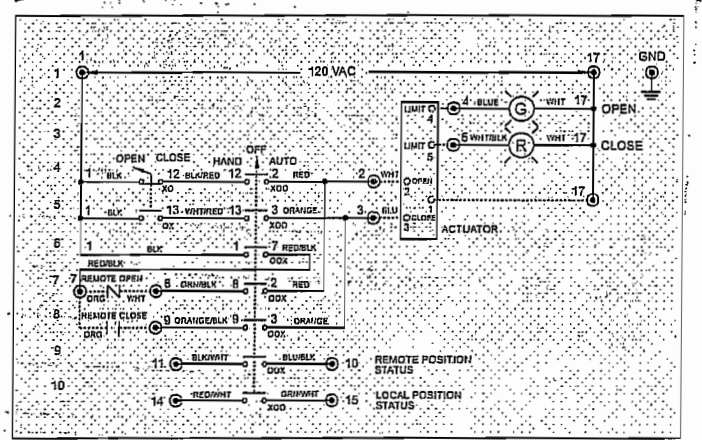

Earth Tech (Canada) Inc.

Reviewed for general conformance with design intent. Responsibility for detailed design in the shop drawings rests with the Contractor.

Responsibility for verification and correlation of field dimensions, fabrication process, techniques of construction, installation and coordination of all parts of the work rests with the Contractor.

REVIEWED ✓

REVIEWED AS MODIFIED

REVISE AND RE-SUBMIT

NOT REVIEWED

Project No. C28/16/79538

Date: 12/9/06 By: [signature]

PRESSURE GAUGE

ASHCROFT®

Duragauge® Pressure Gauge Type 1279, ASME B 40.1 Grade 2A (±0.5% of span)

- *4½" full-size bourdon tube*
- *Patented Duratube™ with as-welded-tube construction controls stress for longer life*
- *"Round Cap Tip" construction lowers stresses for longer life*
- *Easily adjustable, self-locking micrometer pointer*
- *Burn-resistant phenol turret case*
- *Exclusive Teflon coated 400 series stainless steel rotary movement for longer life*
- *New PLUS!™ Performance Option:*
  - *Liquid-filled performance in a dry gauge*
  - *Fights vibration and pulsations without liquid-filled headaches*
  - *See pages 6-7 for details*
  - *Order as option XLL*
- *Epoxy-coated system for superior corrosion resistance*

Type 1279 Duragauge® pressure gauge is offered in 4½" phenolic case for superior chemical and heat resistance. Solid-front case design with blow-out back for safety. Dry, liquid-filled, hermetically sealed, weatherproof or ***PLUS!*** options available. Field convertible to liquid-fill with conversion kit (detailed on page 243). All case styles provide full temperature compensation.

BOURDON SYSTEM SELECTION

Ordering Code	Bourdon Tube & Tip Material[1] (all joints TIG welded except "A")	Socket Material	Tube Type	Range Selection Limits (psi)	NPT Conn.[2]
A	Phosphor Bronze Tube-Brass Tip, Silver Brazed	Brass	C-Tube	12/1000	¼,½
R	316L stainless steel	1019 steel	C-Tube	12/1500	¼,½
			Helical	2000/20,000	¼,½
S	316L stainless steel	316L stainless steel	C-Tube	12/1500	¼,½
			Helical	2000/20,000	¼,½
P[3]	K Monel	Monel 400	C-Tube	15/1500	¼,½
			Helical	2000/30,000	¼,½[4]

(1) For selection of the correct bourdon system material, see the media application table on page 243.
(2) Other connections available on application.
(3) Use for applications where NACE standard MR-01-75 is specified.
(4) 30,000 psi range supplied with ¼ high pressure connection, ½ NPT optional.

STANDARD RANGES

Pressure psi	Compound psi
0/15	30 in.Hg/15 psi
0/30	30 in.Hg/30 psi
0/60	30 in.Hg/60 psi
0/100	30 in.Hg/100 psi
0/160	30 in.Hg/150 psi
0/200	30 in.Hg/300 psi
0/300	
0/400	**Vacuum**
0/600	30/0 in.Hg
0/800	34/0 ftH₂O
0/1000	
0/1500	
0/2000	
0/3000	
0/5000	NOTE:
0/10,000	Equivalent standard
0/20,000	kg/cm², and kPa metric
0/30,000	ranges are available.

TO ORDER THIS 1279 DURAGAUGE:

Select: 45 1279 SS* 04L XXX 2000#

1. Dial size–4½"
2. Case type–1279
   Ring–threaded reinforced polypropylene
3. Bourdon system selection ordering code
4. Connection–¼ NPT (02), ½ NPT (04), Lower (L), Back (B)
5. Optional features–see page 239
6. Standard pressure range
7. Accessories–see pages 233-238

(*) "S" denotes solid front case design

Consult factory for guidance in product selection
Phone (203) 385-0217, Fax (203) 385-0602 or
visit our web site at www.ashcroft.com

MADE IN U.S.A.

DRESSER Instruments

Gauge Isolators

CHEMLINE Plastics Limited
Your Pipeline To Quality

PVC, PP, PVDF

SERIES: SG

INLET CONNECTION: 1/4" or 1/2" Threaded†

INSTRUMENT CONNECTION: 1/4" or 1/2" Threaded

DIAPHRAGM: Teflon®

Chemline SG Series Gauge Isolators allow inexpensive pressure gauges, or any other pressure instrument to be used in corrosive services. The upper chamber (gauge side) is filled with a stable fluid such as glycol or glycerine‡. A diaphragm separates it from the lower chamber which receives the media under pressure.

The 1/2" gauge connection allows use of the popular 4" and 4-1/2" diameter gauges. Pressure switches or transmitters may also be installed. Customers can easily fill isolators and install their own gauges.

Isolate Pressure Instruments from Corrosive Media

Teflon® Diaphragm

Manufactured by Stübbe®

Features

Easy to Mount Gauges
- It is easy to fill an isolator and field mount a gauge. No special equipment is required.
- Will accept popular 4" and 4-1/2" diameter gauges

Provision for Fill Port

High Chemical Resistance
- Choice of body materials for a wide range of applications
- Teflon® PTFE bonded Hypalon dished diaphragm for high chemical resistance and sensitivity

Heavy Duty Design for Safety
- PPG* top chamber
- Heavy wall connection ports
- Bottom port has SS reinforcing ring to eliminate splitting

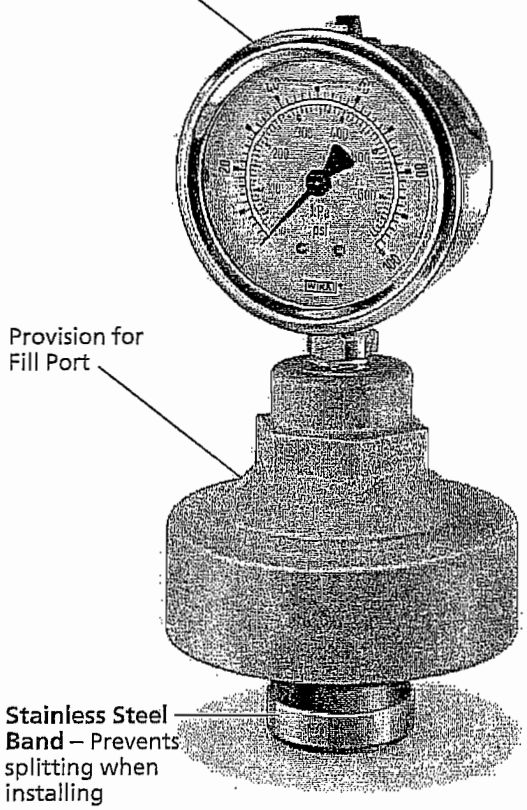

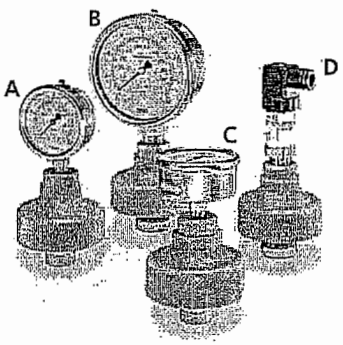

A PP isolator with 2" gauge
B PVC isolator with 4-1/2" gauge
C PP isolator with 2" back mount gauge
D PVC isolator with pressure transmitter

† Other available inlet connections are 1/4" threaded, 1/2" socket or 1/2" to 1" flanged.
‡ Other fluids are available for special applications such as chlorine service.
* Glass reinforced polypropylene.

04/06 ©Chemline Plastics Limited 2006
Chemline is a registered trade mark of Chemline Plastics Limited

Gauge Isolators

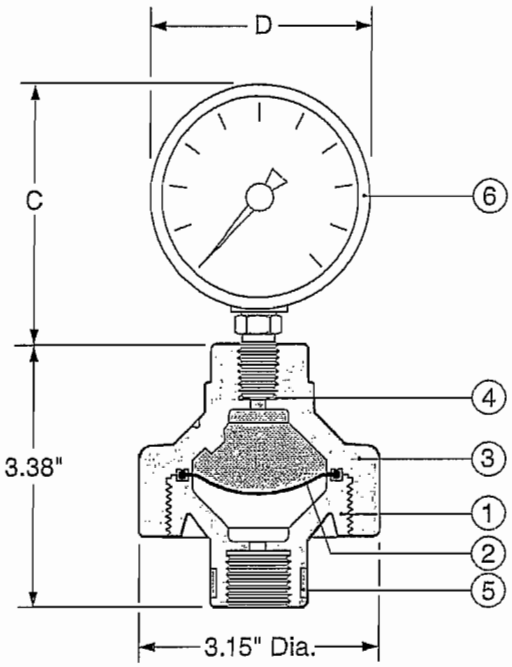

PARTS

▲Recommended Spare Parts

No.	Part	Pcs.	Materials
1	Body	1	PVC, PP, PVDF
2▲	Diaphragm	1	Teflon® PTFE
3	Bonnet	1	PPG
4	Gasket	1	EPDM
5	Stainless Steel Band	1	304 SS
6	Optional Gauge	1	See below

PPG = Glass reinforced polypropylene

OPTIONS & ACCESSORIES

- Gauge mounted to isolator and prefilled with gylcol, glycerine or special fluid for chlorine applications
- Flanged inlet connections
- Chemline will mount any pressure instrument supplied free issue by customer

OPTIONAL GAUGES

Dials and cases are filled with either glycol (standard), gylcerine or silicon for corrosion resistance and dampening. "Internals" are Bourdon tube and connector.

DIMENSIONS INCHES

Gauge Diameter	Item No.	Gauge Connection	Housing	Bourdon Tube	Window	Accuracy	Dimensions C	Dimensions D(max.)
2-1/2"	P025-xx	1/4"	316 SS	Brass	Polycarbonate	±1.5% of span	3.1	2.5
2-1/2"	P025-xx-SS	1/4"	316 SS	316 SS	Polycarbonate	±1.5% of span	3.1	2.5
2-1/2" Back Mount	P025-xx-SS/BM	1/4"	316 SS	316 SS	Polycarbonate	±1.5% of span	1.6	2.5
2-1/2" Back Mount	P025-xx-BM	1/4"	316 SS	Brass	Polycarbonate	±1.5% of span	1.6	2.5
4"	P040-xx-SS	1/2"	316 SS	316 SS	Safety Glass	±1% of span	4.5	4.0
4-1/2"	P045-xx-SS	1/2"	PBTP Plastic[1]	316 SS	Acrylic	±0.5% of span	6.3	5.8

xx denotes the maximum gauge pressure i.e., 30, 60, 100, 160 or 200 psi. See data page for recommended working pressures.
[1] PBTP = glass filled polyester.

WORKING PRESSURES PSI

Material	10 - 20°C 50 - 68°F	30°C 86°F	40°C 104°F	50°C 122°F	60°C 140°F	70°C 158°F	80°C 176°F	90°C 194°F	100°C 212°F	120°C 248°F	WEIGHTS Net Weights Pounds*
PVC	150	100	80	45	15	–	–	–	–	–	1.0
PP	150	125	100	80	65	45	–	–	–	–	0.7
PVDF	150	150	150	125	105	85	70	60	45	30	1.3

Temperature Ranges - PVC: –10 to 60°C (14 to 140°F), **PP:** 8 to 80°C (46 to 176°F), **PVDF:** –30 to 120°C (–22 to 248°F).
NR = Not Recommended. * Weights are for unfilled 1/2" x 1/2" isolators without gauges. 1/2" x 1/4" isolators are 20% lighter.

ORDERING EXAMPLE

Chemline Gauge Isolator	SG		A	005-	002	P	G
Body Material	A – PVC	B – PP	K – PVDF				
Inlet Size	002 – 1/4"	005 – 1/2" (Standard)					
Instrument Connection	002 – 1/4"	005 – 1/2"					
Diaphragm	P – Teflon® PTFE bonded EPDM						
Filling & Mounting	G – Add only if isolator is supplied filled with glycol and gauge or pressure instrument is mounted by Chemline. Separate gauge item numbers are listed above.						

Example: Chemline SI Series Gauge Isolator, PVC, 1/2" x 1/4" FNPT inlet x instrument connections, Teflon®.

CHEMLINE Plastics Limited
55 Guardsman Road, Thornhill, Ontario, Canada, L3T 6L2
Tel: 905-889-7890 info@chemline.com
Fax: 905-889-8553 www.chemline.com

ISO 9001:2000 Certified

Your Pipeline To Quality Valves, Piping, Flow Meters and Controls

Earth Tech (Canada) Inc.

Reviewed for general conformance with design intent. Responsibility for detailed design in the shop drawings rests with the Contractor.

Responsibility for verification and correlation of field dimensions, fabrication process, techniques of construction, installation and coordination of all parts of the work rests with the Contractor.

REVIEWED _____

REVIEWED AS MODIFIED _____

REVISE AND RE-SUBMIT _____

NOT REVIEWED _____

Project No. C28/16/79538

Date: 12/9/06 By: M. Santa

PULSATION DAMPENERS

SENTRY PULSATION DAMPENERS

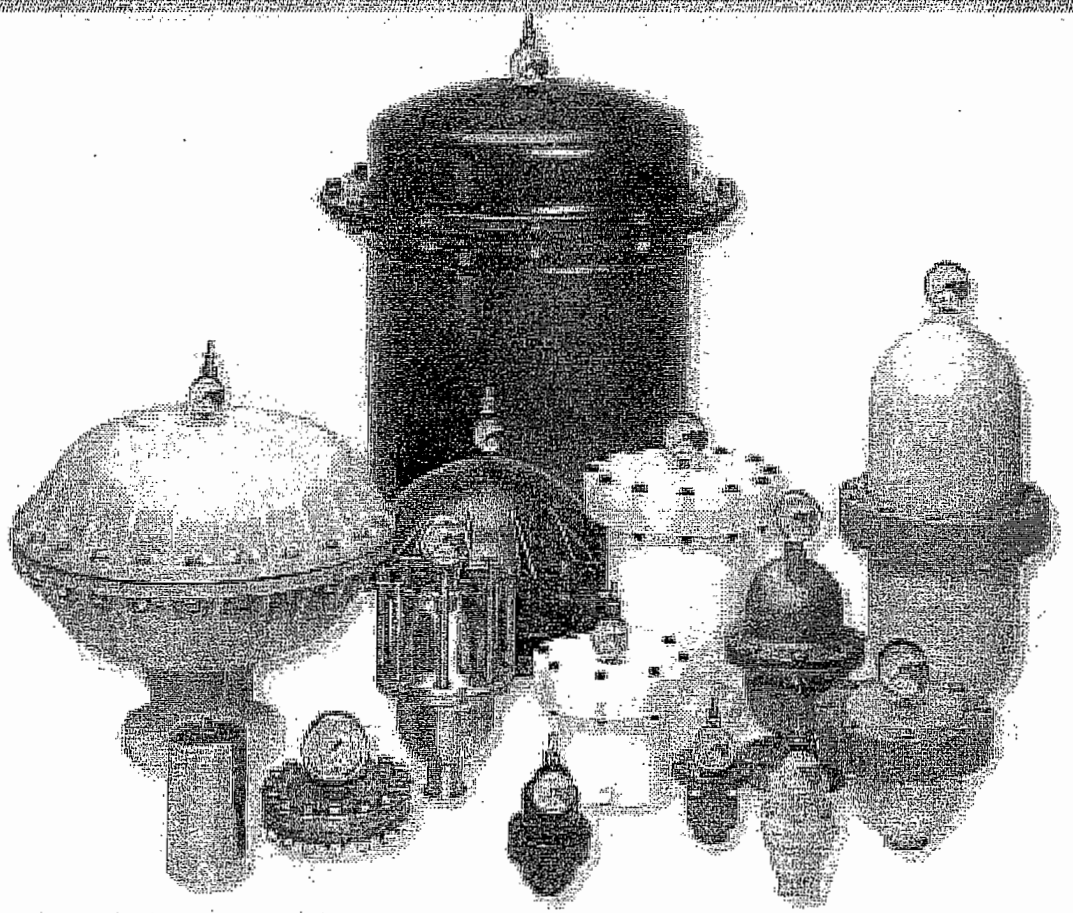

SENTRY
PULSATION DAMPENERS

DON'T PUMP WITHOUT US

BLACOH
FLUID CONTROL

601 Columbia Ave, Bldg. D, Riverside, CA 92507 • USA
Tel: (800) 603-7867 or (951) 342-3100 • Fax: (951) 342-3101
E-mail: sales@blacoh.com • Website: www.blacoh.com

SENTRY PULSATION DAMPENERS

BENEFITS & FEATURES

Positive Displacement (PD) pumps create pulsation and hydraulic shock due to the reciprocating nature of their stroking action, potentially damaging the entire pumping system. Blacoh's SENTRY® Pulsation Dampeners remove virtually all hydraulic shock, enhancing all-around performance and reliability of fluid handling equipment in industrial and chemical transfer applications.

SENTRY BENEFITS:

- Produces a near steady fluid flow up to 99%* pulsation and vibration free.
- Protects pipes, valves, fittings, meters, and in-line instrumentation from destructive pulsations, vibrations, surges, cavitation, thermal expansion, & water hammer
- Creates steady and continuous flow when dosing, blending or proportioning additives
- Insures accuracy, longevity, and repeatability of in-line meters
- Enables uniform application of material in spraying and coating systems
- Reduces product agitation, foaming, splashing and degradation of product
- Provides liquid energy storage for emergency valve closure and equipment shutdown
- Reduces overall energy cost with continuous linear flow, rather than start/ stop turbulent flow
- Operates as a reservoir for make-up fluid

SENTRY FEATURES:

- Sizes available for all positive displacement pumps with discharge sizes from 1/8" (3.18mm) to 6" (152.4mm)
- Simple, reliable design and quick installation
- Easy in-line maintenance
- Pressure ranges up to 4000 PSI (276 BAR) available from stock
- Temperature ranges from -60°F to +400°F (-51°C to +205°C) available from stock
- Custom models available up to 100 gallons (378L) and 25,000 PSI (1724 BAR)
- Bodies available in a full range of chemically resistant materials
- Bladders available for even the most corrosive application

Let SENTRY Stand Guard Over Your System.
Increase productivity, safety, reliability and efficiency.
Decrease maintenance and operating costs.

PROCESSES

- TRANSFER
- METERING
- FILTERING
- SPRAYING
- PRINTING
- COATING
- DOSING
- INJECTING
- FILLING
- MIXING

INDUSTRIES SERVED

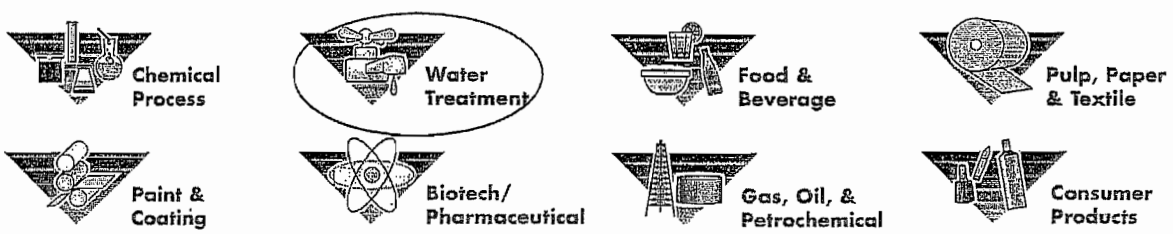

PRINCIPLES OF OPERATION

SENTRY operates on the principle that volume is inversely proportional to pressure. Compressed air or gas is introduced into the air chamber of the SENTRY Pulsation Dampener to a specified pressure. The gas is entrapped by the elastomeric bladder, which prevents contact between the process fluid and compressed gas. (Without the bladder, the gas would dissolve into the fluid and cause product contamination). During pump discharge, fluid enters the wetted chamber of the SENTRY Pulsation Dampener, displacing the bladder, compressing the gas and absorbing the shock. During pump shift, liquid pressure decreases, the dampener gas expands, pushing fluid back into the process line, eliminating up to 99% of system shock and pulsation.

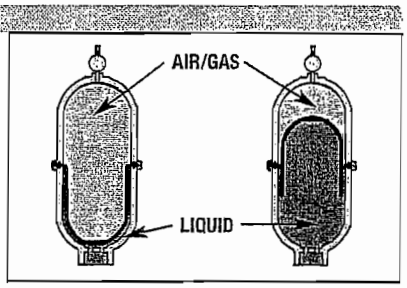

TYPICAL INSTALLATIONS

ADDD, METERING, PERISTALTIC, & PISTON PUMPS

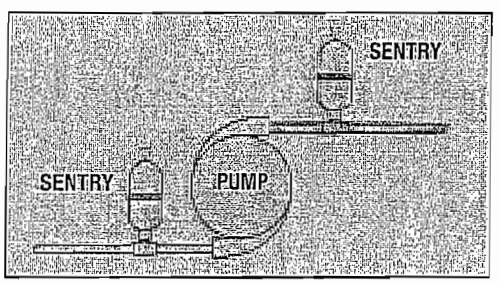

PUMP STARTUP & SHUTDOWN

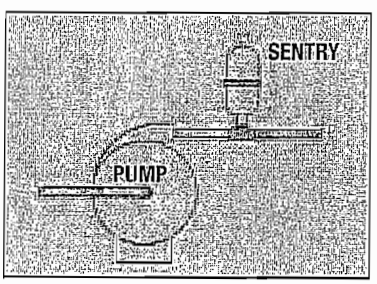

QUICK CLOSING VALVES

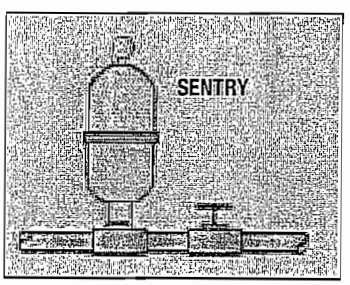

*Requires proper sizing.

SENTRY TECHNICAL SPECIFICATIONS

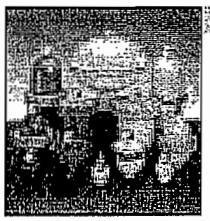

SENTRY PLASTIC

Pressure Rating*:	Up to 150 PSI (10 BAR)	Temperature Range**:	-20°F to +250°F (-29°C to + 121°C)
Capacities:	4 cubic inches to 5 gallons (.066 – 18L)		
Shell Materials:	Polypropylene Conductive Polypropylene PVC and CPVC PVDF Conductive Acetal	Inlet Ports:	Threaded: FNPT and BSP Flanged: ANSI and DIN

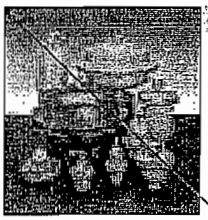

SENTRY METAL

Pressure Rating*:	Up to 4000 PSI (276 BAR)	Temperature Range**:	-60°F to + 400° F (-51°C to +204°C)
Capacities:	4 cubic inches to 100 gallons (.066 - 378L)		
Shell Materials:	Aluminum Carbon Steel 316L Stainless Steel Alloy 20 Hastelloy C Epoxy, PVDF and PTFE coated steel	Inlet Ports:	Threaded: FNPT and BSP Flanged: ANSI and DIN

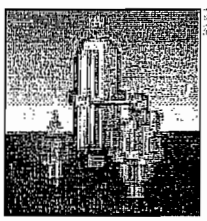

SENTRY SANITARY

Pressure Rating*:	Up to 1000 PSI (69 BAR)	Temperature Range**:	-20° F to +350° F (-28°C to +176° C)
Capacities:	4 cubic inches to 10 gallons (.066 - 37L)		
Shell Materials:	30 RA Polished 316L Stainless Steel Bead Blasted 316L Stainless Steel	Inlet Ports:	Tri-clamp type sanitary fitting

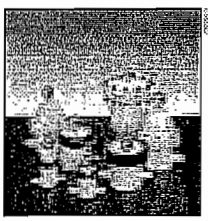

SENTRY PTFE

Pressure Rating*:	Up to 100 PSI (6 BAR)	Temperature Range**:	+40°F to + 220°F (+4°C to +104°C)
Capacities	4 to 370 cubic inches (.066 - 6L)		
Shell Materials:	Machined PTFE	Inlet Ports:	Threaded: FNPT and BSP Flanged: ANSI and DIN Metric Flare Type

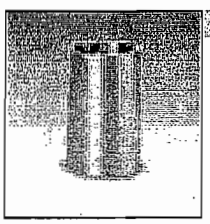

SENTRY XP HIGH PRESSURE

Pressure Rating*:	Up to 4000 PSI (276 BAR)	Temperature Range**:	-60°F to +225°F (-51°C to +107°C)
Capacities	8 to 24 cubic inches (.13 - .39L)		
Shell Materials:	316L Stainless Steel	Inlet Ports:	Threaded: FNPT Flanged: ANSI

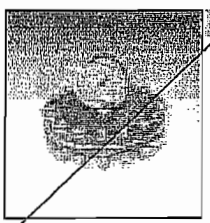

SENTRY TEF-GUARD HP II

Pressure Rating*:	Up to 2000 PSI (137 BAR)	Temperature Range**:	+40°F to + 220°F (+4°C to +104°C)
Capacities	12 cubic inches (.20L)		
Shell Materials:	316L Stainless Steel Carbon Steel Alloy 20 Hastelloy C	Inlet Ports:	Threaded: FNPT Flanged: ANSI

BLADDER OPTIONS

COMPOUND	TEMPERATURE LIMITS	APPLICATIONS
Neoprene	-0°F to +200°F (-18°C to +93°C)	Good abrasion resistance and flex; use with moderate chemicals.
Buna	+10°F to +180°F (+12°C to +82°C)	Good flex life; use with petroleum, solvents and oil-based fluids.
EPDM	-60°F to +280°F (-51°C to +137°C)	Use in extreme cold; good chemical resistance with ketones, caustics.
Hypalon	-20°F to +275°F (-29°C to +135°C)	Excellent abrasion resistance; good in aggressive acid applications.
Viton	-10°F to +350°F (-23°C to +176°C)	Use in hot & aggressive fluids; good with aromatics, solvents, acids & oils.
Aflas	0°F to +400°F (-18°C to +204°C)	High temperature, petroleum based chemicals, strong acids and bases.
FDA Silicone	-20°F to +300°F (-29°C to +149°C)	FDA-approved food grade material; for use in food and pharmaceutical processing.
FDA Buna	+10°F to +180°F (-12°C to +82°C)	FDA-approved food grade. Similar characteristics of Silicone.
FDA Fluorel	-10°F to +350°F (-23°C to +176°C)	Fluorel is a fluorelastomer comparable to Viton.
PTFE	+40°F to +220°F (+4°C to +104°C)	Bellows design; excellent flex life; use with highly aggressive fluids.

* Maximum PSI rated for ambient temperatures.

** Reflects entire temperature range for all available materials. Consult Blacoh on specific materials.

AIR CONTROL OPTIONS

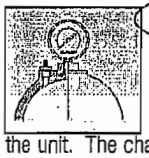

CHARGEABLE

The chargeable model has a Schrader type charging valve that allows for a predetermined pressure charge to be applied and held in the dampener. No permanent source of compressed gas is required to be attached to the unit. The chargeable models are used primarily with metering, piston and peristaltic pumps for pulsation dampening. Chargeable models are also used for surge suppression to prevent water hammer from quick closing valves, for make-up fluid to prevent pump cycling and for suppression of pump start up or shut down pressure spikes.

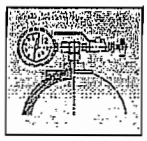

INLET STABILIZER

The patented inlet stabilizer air control (U.S. Patent No. 6,089,837) consists of a compound pressure gauge, a pressure/vacuum tight ball valve and a venturi valve. When compressed air is passed through the venturi valve at high speed, a low pressure area is created which is used to evacuate the air from the stabilizer, creating a vacuum internally. Conversely, when the flow of air through the venturi valve is diverted into the stabilizer, a pressure charge is obtained. When pump inlet conditions are optimized, pump efficiency is maximized.

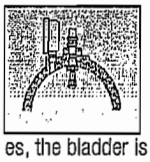

AUTOMATIC

An automatic poppet type valve located in the non-wetted section of the dampener allows for an increase in compressed air pressure to balance an increase in system liquid pressure. As liquid system pressure increases, the bladder is pushed further up into the dampener until it contacts the internal automatic valve. This contact opens the valve and allows an increase of compressed air to enter the dampener. When the air pressure inside the dampener equals the system liquid pressure, the dampener is in balance and pulsations are minimized. If a change in pressure occurs this process is repeated. Automatic units are designed for use on air operated diaphragm pumps in systems with a varying discharge pressure.

ADJUSTABLE

The adjustable model uses a self-relieving regulator to set dampener pressure. A compressed air line must be permanently attached to the regulator. The regulator allows for an easy, convenient method for readjusting the dampener pressure if the system fluid pressure changes. Adjustable units are designed for use on air operated diaphragm pumps in systems with a constant discharge pressure.

APPLICATION STORIES

APPLICATION: PULSATION DAMPENING

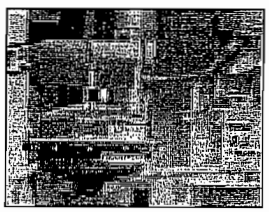

PROBLEM: A major pulp & paper mill in the Northwest used AODD unloading pumps. The reciprocating action of these air-operated pumps created violent pulsations that caused both pipe stress and mounting fatigue. In fact, these pulsations often caused the pumps to be pulled from their cement foundations. This created significant downtime, costly foundation repair, environmental hazards, and a dangerous working environment.

SOLUTION: A Blacoh SENTRY IV Pulsation Dampener was installed in the common discharge of the pumps to dampen these pulsations.

RESULT: Pipe stress and mounting fatigue have been eliminated. Not only have the pumps not been ripped from their cement foundations, but the mill has experienced longer life from pump components such as diaphragms and ball valves.

APPLICATION: WATER HAMMER

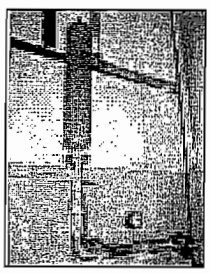

PROBLEM: A major producer of water treatment chemicals accessed their local water supply through a 3" PVC pipe with quick-closing valves. When the desired quantity had been measured and the valve shut, a water hammer effect with pressure spikes that exceeded the PVC pipe's burst strength was created. The PVC repeatedly broke, causing the entire plant to be shut down for repair. In addition, since pipe failure occurred under a nearby highway, it also had to be closed.

SOLUTION: A Blacoh SENTRY 10 gallon Surge Suppressor was installed on the pressure side of each quick closing valve to reduce water hammer pressure spikes.

RESULT: The damaging water hammer pressure spikes are now absorbed, no pipes have ruptured, and the plant (and nearby highway) have had no downtime due to water hammer.

APPLICATION: METERING

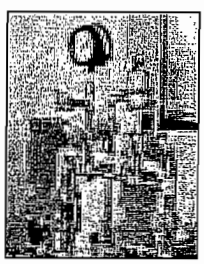

PROBLEM: A 300 megawatt power plant required a chemical feed system to supply hydrazine to a boiler. The hydrazine acts as an oxygen scavenger, and must be delivered in a precise and consistent quantity. While metering pumps can deliver chemicals in precise amounts, their reciprocating action will not allow delivery in a smooth and consistent flow.

SOLUTION: A Blacoh SENTRY III Pulsation Dampener was installed in the common discharge of two metering pumps to create smooth and consistent flow.

RESULT: Hydrazine is now delivered to the boiler in a precise and consistent quantity. In addition, pipe vibration has been eliminated, gauge accuracy has been maximized, and pump component stress has been reduced.

APPLICATION: SPRAYING/ COATING

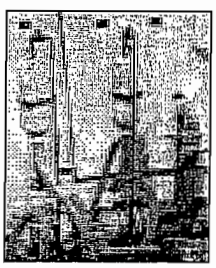

PROBLEM: A decontamination facility pumped acids and water through a series of 15° spray nozzles to rinse radiation from contaminated metals. However, the pulsating action of their reciprocating pumps caused uneven spray into the rinse tanks, and the metals were not rinsed completely.

SOLUTION: A Blacoh SENTRY 1 Pulsation Dampener was installed at each pump discharge manifold to eliminate the surging flow of the pumps and ensure complete coverage and thorough cleaning.

RESULT: The even flow ensures that the metal product is completely rinsed of radiation. Furthermore, both process time and the amount of acid required have been reduced, which increased productivity and profit.

PUMPING SYSTEM SOLUTIONS

SENTRY®
INLET STABILIZER
Extends Life Of All Inlet System Components

SENTRY®
PULSATION DAMPENER
Remove Up To 99% Of System Shock

SENTINEL®
DIAPHRAGM SEALS
Protect & Isolate System Instrumentation

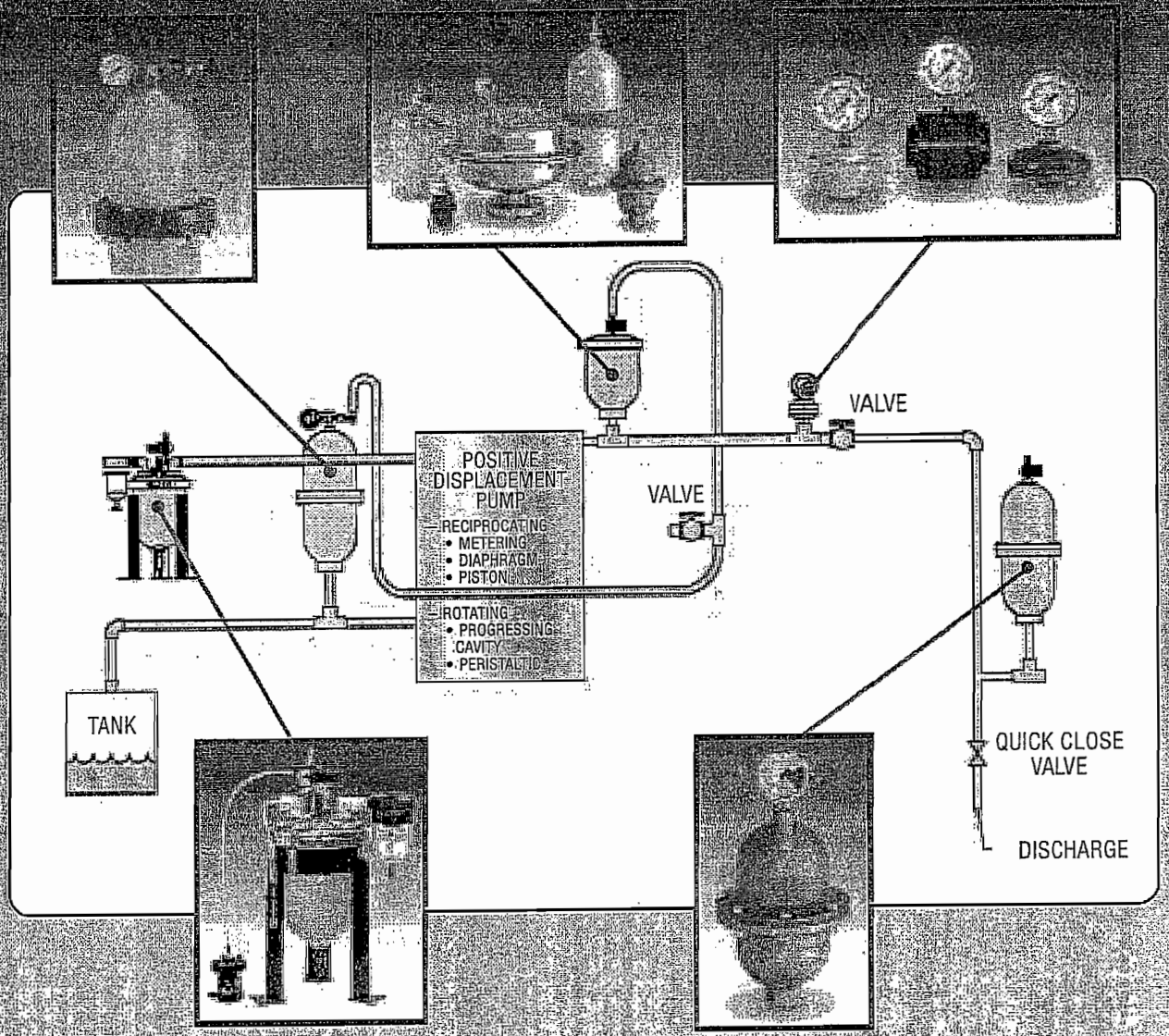

SPILL-STOP®
LEAK CONTAINMENT
Stops Spills Caused By Pump Diaphragm Failure

SENTRY®
SURGE SUPPRESSOR
Eliminate Hydraulic Surge & Water Hammer

UNDERSTANDING PULSATION AND WATER HAMMER CONTROL

PULSATION DAMPENING

Positive displacement pumps create pulsation and hydraulic shock purely by the reciprocating nature of the pump's stroking action. During the discharge stroke of a pump, fluid pressure takes the line of least resistance, displacing the bladder in the dampener, and compressing the trapped gas. As the pump begins its next cycle, fluid flow stops momentarily allowing the compressed gas to expand, forcing the bladder to push the accumulated fluid back into the discharge line. This fills the void created in the pipeline by the pump's cycle shift. Whether a piston, plunger, air diaphragm, peristaltic, gear, or diaphragm metering pump, a SENTRY Pulsation Dampener placed at the pump's discharge will produce a steady fluid flow up to 99% pulsation free; protecting the entire pumping system from the damaging effects of shock.

SURGE SUPPRESSION & WATER HAMMER

When fluid in motion is abruptly stopped, a hydraulic surge is created in the system. Hydraulic surge is often referred to as "water hammer". The kinetic energy, released as pressure, can spike up to six times the system's operating pressure, destroying system instrumentation, pumps, pipes, fittings, and valves. Without a suppression device, the shock wave travels the length of the pipe back to the pump, then reverses again, oscillating back and forth until friction dissipates the pressure spike or a system component fails.

There are several major culprits that produce water hammer; quick closing valves, back surge, pump start up and pump shut down. Quick closing valves can be defined as valves that close within one and one-half seconds. Quick closing valves have the potential of stopping large volumes of energized fluid, producing violent water hammer. The pump start up also stops fluid in motion. During pump start up, fluid in a pipe is static and must be accelerated. The pumped fluid is abruptly stopped when it contacts the static fluid in the pipe, again creating a shock wave. A SENTRY Surge Suppressor installed at the pump's discharge will provide the accumulation capacity to absorb the rapid fluid acceleration and prevent a pressure spike from occurring. As the surge enters the Suppressor, the gas inside is compressed, the fluid is accumulated and the shock wave is absorbed. When steady system flow rate is achieved, pressure and fluid are slowly released back into the system by the compressed gas.

At pump shut-down, either planned or failure, fluid flow will momentarily continue away from the pump due to momentum. As the flow continues, a void, called column separation can occur at the pump's discharge. When fluid momentum is stopped due to pipe friction, the liquid will usually reverse toward the void area of the pump discharge. The reversing fluid will slam into the check valve usually located at the pump discharge and a water hammer pressure spike will occur. Depending upon the design of the piping system and the fluid involved, the voided area can actually become sub-atmospheric which can significantly increase the pressure spike.

INLET (SUCTION) STABILIZATION

Without a sufficient supply of fluid a pump will not perform efficiently. Fluid "starvation" is caused by unbalanced hydraulics from friction, acceleration, and head. A reciprocating pump further complicates the issue by emitting high-frequency pressure waves created by the inlet valves opening and closing. In high inlet pressure situations, a pump's inlet valves create water hammer by their opening and closing action; increasing pipe and pump damage, and draining system efficiency.

In suction lift and horizontal suction applications, the pumps' inlet valve action actually decreases inlet fluid pressure. A "starved" or cavitating pump will be unable to produce specified flow rates due to the incomplete filling of cylinders and liquid chambers. In addition, cavitation will result in the premature failure of pump parts. A SENTRY Suction Stabilizer at the pump's inlet will act as an accumulator, reducing pressure fluctuations and aid in filling the pump head with fluid during each inlet stroke. In high suction lift applications it is also important not to lose the acceleration of the fluid created with each suction stroke of the pump. A Suction Stabilizer will momentarily maintain the flow of the accelerated fluid. The fluid flows into the stabilizer as the pump shifts, and then out as the inlet valve re-opens, maintaining even pressure and steady flow, minimizing cavitation.

THERMAL EXPANSION

Many fluids change volume due to temperature changes. As the temperature of a fluid rises, the fluid expands. In a closed or loop system a volumetric increase in fluid can create a rise in pressure beyond the limits of safety. The increase in pressure can result in ruptured pipes and fittings, destroyed in-line instrumentation, burst pressure relief valves and contaminated surroundings. A SENTRY Thermal Expansion Chamber installed in the pipeline will accumulate the expanded fluid, eliminating a dangerous rise in pressure.

ACCUMULATORS, AUXILIARY ENERGY, FLUID MAKE-UP & TRANSFER BARRIER

Fluids flowing in a system can be accumulated during one part of the process cycle, and then released when needed during another part of the cycle. The release can be based upon the pressure of the system or by the opening/closing of a valve. The SENTRY Accumulator can be used to maintain process line pressure and store fluid for other uses, such as to back flush filters or to draw off sample fluid.

Accumulators can be used as a Transfer Barrier where pressure on one side of a system needs to be transferred to another side without the mixing of the fluids. The accumulator is installed in-line with the two fluids entering at opposite ends, separated by the bladder. As the pressure of one fluid increases, it pushes the bladder against the other fluid, transferring the increase in pressure.

Please call your local distributor:

BLACOH FLUID CONTROL

601 Columbia Ave, Bldg. D, Riverside, CA 92507 • USA
Tel: (800) 603-7867 or (951) 342-3100 • Fax: (951) 342-3101
E-mail: sales@blacoh.com • Website: www.blacoh.com

PARTS LISTING AND EXPLODED VIEW
SENTRY MODEL C111VF

SENTRY MODEL #:	C111VF
MAXIMUM PRESSURE:	150 PSI/10 BAR
CAPACITY:	370 CUBIC INCHES/6.06 LITERS
WETTED HOUSING:	PVC
NONWETTED HOUSING:	PVC
BLADDER:	VITON
INLET:	2" 150# RAISED FACE FLANGE
AIR CONTROL:	CHARGEABLE

DESCRIPTION				
ITEM	PART #	QTY	Component	Material
1	111-28	1	Wetted Housing	PVC
2	201-25	1	Bladder	Viton
3	111-24	1	Nonwetted Housing	PVC
4	105-26	1	Ring Band Assembly	Glass Filled Noryl (Includes Fastener Assy)
5	101-33	1	Gauge	Plastic, Brass, Bronze
6	101-70	1	Fill Valve	Brass
7	105-80	1	Fastener Assy	Stainless Steel

5/23/2006

ITEM

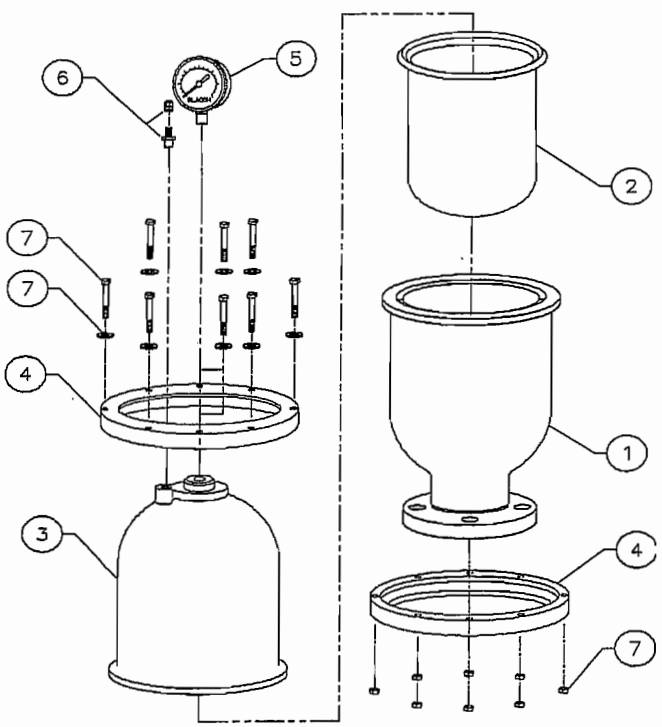

DIMENSIONAL DRAWING

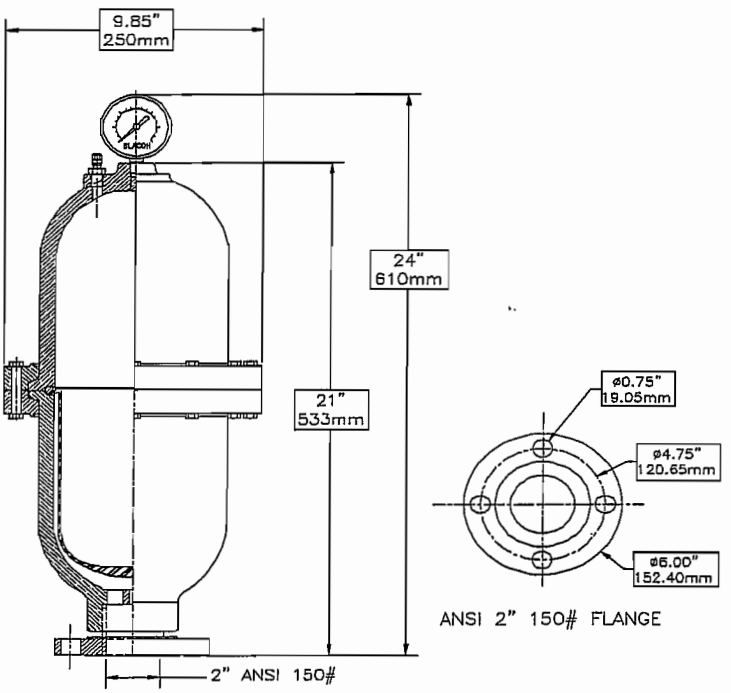

TOLERANCE ± .25"

BLACOH FLUID CONTROL, INC
RIVERSIDE, CALIFORNIA USA
TEL: 800.603.7867 or 951.342.3100 Fax: 951.342.3101
E-mail: sales@blacoh.com web site: www.blacoh.com

BLACOH FLUID CONTROL

Blacoh Fluid Control, Inc.
601 Columbia Ave., Unit D
Riverside, CA 92507

TO ORDER
CALL (951) 342-3100
FAX (951) 342-3101

BLACOH'S PERISTALTIC PUMP CHART

This Pulsation Dampener sizing chart is based upon removing 93% of pulsations from the peristaltic pump. If a higher degree of dampening is desired, use the next largest size.

Inlet Port Size	Approx. Gal/Revolution	Dampener Size
~~1/2 inch~~	~~0.0058 gallons~~	~~SENTRY III - 10 Cu In~~
~~3/4 inch~~	~~0.022 gallons~~	~~SENTRY II - 36 Cu In~~
~~1 inch~~	~~0.079 gallons~~	~~SENTRY II - 85 Cu In~~
~~1 1/2 inch~~	~~0.165 gallons~~	~~SENTRY I - 175 Cu In~~
~~1 1/2 inch~~	~~0.35 gallons~~	~~SENTRY I - 175 Cu In~~
2 inch	0.76 gallons	SENTRY I - 370 Cu In
2 1/2 inch	1.77 gallons	SENTRY I - 370 Cu In
~~3 inch~~	~~3.09 gallons~~	~~SENTRY IV - 5 Gallon~~
~~4 inch~~	~~5.28 gallons~~	~~SENTRY V - 10 Gallon~~

Earth Tech (Canada) Inc.

Reviewed for general conformance with design intent. Responsibility for detailed design in the shop drawings rests with the Contractor.

Responsibility for verification and correlation of field dimensions, fabrication process, techniques of construction, installation and coordination of all parts of the work rests with the Contractor.

REVIEWED _____

REVIEWED AS MODIFIED _____

REVISE AND RE-SUBMIT _____

NOT REVIEWED _____

Project No. C28/16/79538

Date: 12/9/06 By: M. Toulon

ABB FLOWMETER

Data Sheet

D184S044U02

Field IT

Electromagnetic Flowmeter FXE4000

(COPA-XE/MAG-XE)

Industrial IT enabled

The Electromagnetic Flowmeter (EMF) can be used to accurately measure the flowrate of liquids which have an electrical conductivity greater than 5 µS/cm (20 µS/cm for demineralized water).
The COPA-XE is a flow measurement system in a Compact Design.
The MAG-XE flow measurement system consists of a flowmeter primary and a remote mounted µP-converter

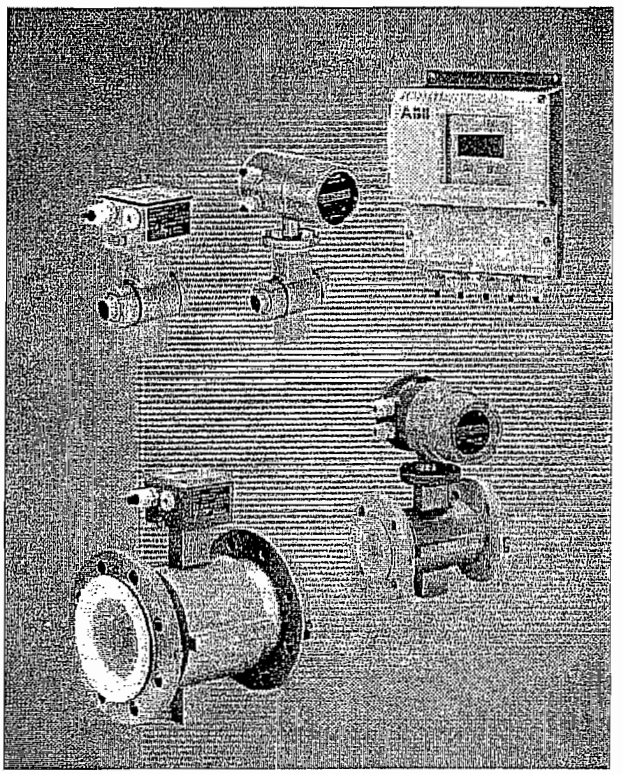

Stainless Steel Flowmeter Primary (Series 2000)

- The basic flowmeter body is installed using threaded adapters which are matched to the pipeline connections:
- Weld stubs
- Food Industry fittings per DIN 11851
- Tri-Clamps
- Wafer and fixed flange designs
- Certificates EHEDG, FML, 3A

Flowmeter Primary with Aluminum Housing (Series 4000)

- Flange and wafer designs
- DVGW Test Report
- Certifiable for Cold and Waste Water and Fluids other than Water

Converter

- Communication PROFIBUS DP, HART-Protocol, FOUNDATION Fieldbus, PROFIBUS PA, ASCII
- Pulse output, configurable (active/passive)
- Data secured in a plug-in EEPROM
- Graphic display

HART FIELD COMMUNICATIONS PROTOCOL

PROFIBUS

Fieldbus Foundation

Intelligent
Compact and Effective

ABB

Overview, Flowmeter Primary and Converter Designs: FXE4000 (COPA-XE)

	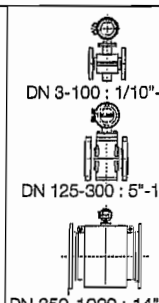	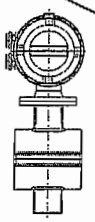 DN 3-100 : 1/10"-4"	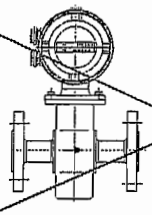 DN 3-100 : 1/10"-4"	DN 50-DN 100 : 2"-4"	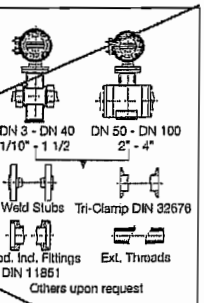
	Fixed Flange	Wafer Design	Fixed Flange	Wafer Design	Variable Connections
Housing Material	Aluminum Housing Series 4000		Stainless Steel Housing Series 2000		

Primary

Model Number	DE43F	DE43W	DE23F	DE23W	DE23-R,-S,-T,-E
Accuracy	0.5 % of rate				
	DN PN	DN PN	DN PN	DN PN	DN PN
Wafer Design	-	3-100:1/0"-4" 16	-	3-100:1/10"-4" 10-40	-
Flanges DIN	3-1000 10-40	-	3-100 10 - 40	-	-
Flanges ANSI	1/8"-40" CL150-300	-	1/8"-4" CL150-300	-	-
Food Ind. fittings DIN 11851	-	-	-	-	3-100:1/10"-4" 10
Weld stubs	-	-	-	-	3-100:1/10"-4" 10
Tri-Clamp per DIN 32676	-	-	-	-	3-100:1/10"-4" 10
Ext. thds. ISO 228/DIN 2999	-	-	-	-	3-25:1/10"-1" 10
Liner	Hard/soft rubber PTFE, PFA	PFA (DN 3-8 1/10"-5/16") PTFE (DN 10-100 3/8"-4")	PFA (vacuum tight)	PFA (vacuum tight)	PFA (vacuum tight)
Conductivity	> 5 µS/cm (20 µS/cm for demineralized water)	> 5 µS/cm (20 µS/cm for demineralized water)	> 5 µS/cm (20 µS/cm for demineralized water)	> 5 µS/cm (20 µS/cm for demineralized water)	> 5 µS/cm (20 µS/cm for demineralized water)
Electrodes	SS 1.4571[316Ti], 1.4539, Hastelloy B2/C4, Platinum-Iridium, Tantalum, Titanium				
Process Connection Material	Steel, 1.4571[316Ti]	-	1.4571[316Ti]	-	1.4404[316L]
Protection Class	IP 67	IP 67	IP 67	IP 67	IP 67
Fluid Temperature *	-25 to +130 °C	-25 to +130 °C	-25 to +130 °C	-25 to +130 °C	-25 to +130 °C

Approvals

EEx Design	TÜV 97, ATEX 1173X (see separate data sheet)
Certifiable	Cold- and Waste Water, Liquids other than Water
Press. Equip. Dir. 97/23/EG	Conformity Evaluation per Category III, Fluid Group 1

Certificates

	-	-	-	-	3A, FML, EHEDG (Cleanability)

Converter

Supply Power	85-253 V AC/16.8-26.4 V AC/16.8 - 31.2 V DC
Current Output	0/2-10mA, 0-5 mA, 0/4-20 mA, 0/4-10/12-20 mA
Pulse Output	Active 24 V DC pulse or passive optocoupler
Ext. Zero Return	Optocoupler input
Ext. Totalizer Reset	Optocoupler input
Forward/Reverse Metering	Signal over optocoupler output
Empty Pipe Detector	from DN 10 : 3/8", signal over optocoupler output
Self Monitor	yes
Local Display / Totalization	yes
Housing	Converter housing made of Aluminum (standard), converter made of stainless steel (option)
Communication	PROFIBUS DP, PROFIBUS PA, HART-Protocol, FOUNDATION Fieldbus, ASCII-Protocol (RS485)

*) -25 °C for stainless steel process connections
-10 °C for steel process connections

Accuracy, Reference Conditions and Principles of Operation

Reference Conditions per EN 29104

Fluid Temperature
20 °C ± 2K

Ambient Temperature
20 °C ± 2K

Supply Power
Line voltage per Name Plate U_N ± 1 % and
Frequency f ± 1 %

Installation Conditions
Upstream >10xDN straight section
Downstream >5xDN straight section
D = Flowmeter primary size.

Warm Up Phase
30 min

Analog Output Effects
Same as pulse output plus ± 0.1 % of rate.

Standard Calibration (Pulse Output):
Q>0.07 $Range_{max}$ ± 0.5 % of rate
Q<0.07 $Range_{max}$ ± 0.00035 $Range_{max}$
$Range_{max}$ = maximum flowrate for the flowmeter size at 10 m/s

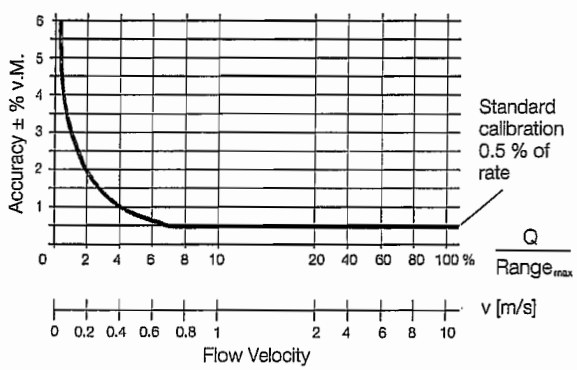

Fig. 1: Flowmeter System Accuracy FXE4000

Principle of Operation

The Faraday Laws of Induction, which state that a voltage is generated in a conductor when it moves through a magnetic field, form the basis for the electromagnetic flowmeter measurements.

This measurement principle is applied to a conductive fluid which flows in a pipe in which a magnetic field is generated perpendicular to the flow direction (see Schematic).

The voltage which is induced in the fluid is measured at two electrodes located diametrically opposite to each other. This signal voltage U_E is proportional to the magnetic induction B, the electrode spacing D and the average fluid velocity v.

Since the magnetic induction B and the electrode spacing D are constant values the signal voltage U_E is proportional to the average flow velocity v. The equation for calculating the volumetric flowrate shows that the signal voltage U_E is linear and proportional to the volumetric flowrate.

The induced signal voltage is converted into scaled, analog and digital output signals in the converter.

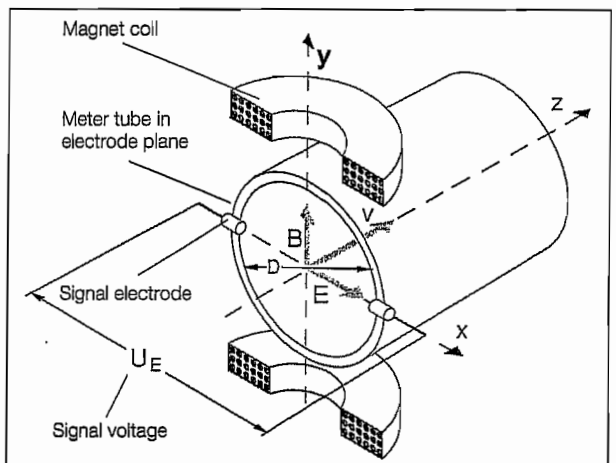

U_E = Signal voltage
B = Magnetic induction
D = Electrode spacing
v = Average flow velocity
qv = Volume flowrate

$U_E \sim B \cdot D \cdot v$

$qv = \frac{D^2 \pi}{4} \cdot v$

$U_E \sim qv$

Fig. 2: Electromagnetic Flowmeter Schematic

Installation Requirements and Grounding

In- and Outlet Pipe Sections

The metering principle is independent of the flow profile as long as standing eddies do not extend into the metering section, such as may occur after double elbows, tangential inflow or partially open gate valves upstream of the flowmeter. It is recommended that flow control devices be installed downstream from the flowmeter primary. It is essential to assure that the meter tube is always completely filled with fluid.

Our experience indicates that in most installations, straight inlet sections 3 x D long and straight outlet sections 2 x D long are sufficient.

For test stands the reference conditions in EN 29104 are to be maintained. For certified instruments, there are special in- and outlet length requirements (see Page 7).

Electrode Axis

The meter can be installed in vertical, horizontal or sloped pipelines. The electrode axis should be horizontal, if at all possible. A vertical electrode axis orientation should be avoided. An ideal installation is shown in Fig. 3 .

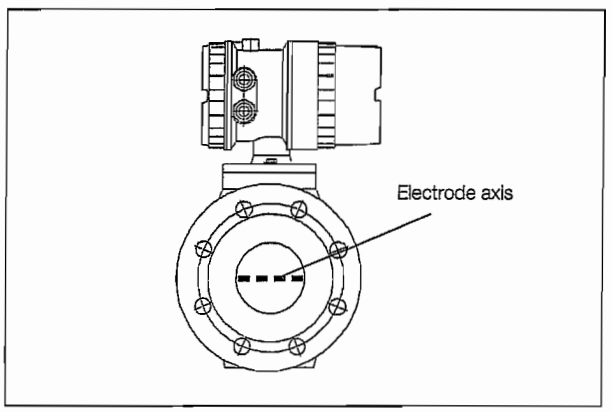

Fig. 3: Electrode Axis

Grounding

The grounding of the flowmeter primary is essential not only for safety reasons, but also of importance to assure trouble free operation of the electromagnetic flowmeter. The ground screws on the flowmeter primary are to be brought to ground potential. For technical reasons this potential should be identical to the potential of the metering fluid, if possible.

For plastic or insulated lined pipelines the fluid is grounded by installing ground plates. When there are stray potentials present in the pipeline, a ground plate is recommended on both ends of the meter primary.

For flowmeter primaries with hard or soft rubber liners, sizes DN 125/5" and larger, a conductive element is incorporated in the liner. This assures that the fluid is grounded.

To comply with the EMC- and Low Voltage Regulations the connection box/converter must be grounded in addition to the meter tube of the flowmeter primary. The green/yellow cable, included with the shipment, should be used to make this connection. Connection examples are shown in the Section „Interconnection Diagrams" starting on Page 37.

Installation in Larger Size Pipelines

The flowmeter primary can readily be installed in larger pipeline sizes by utilizing reducers (e.g. flanged reducers DIN 2616). The pressure drop which results from the reduction can be determined from the Nomograph Fig. 4. The pressure drop is determined in the following manner:

1. Calculate the diameter ratio d/D.
2. Determine the flow velocity from the Flow Range Nomograph Fig. 5 .
3. Read the pressure drop on the Y-Axis in Fig. 4.

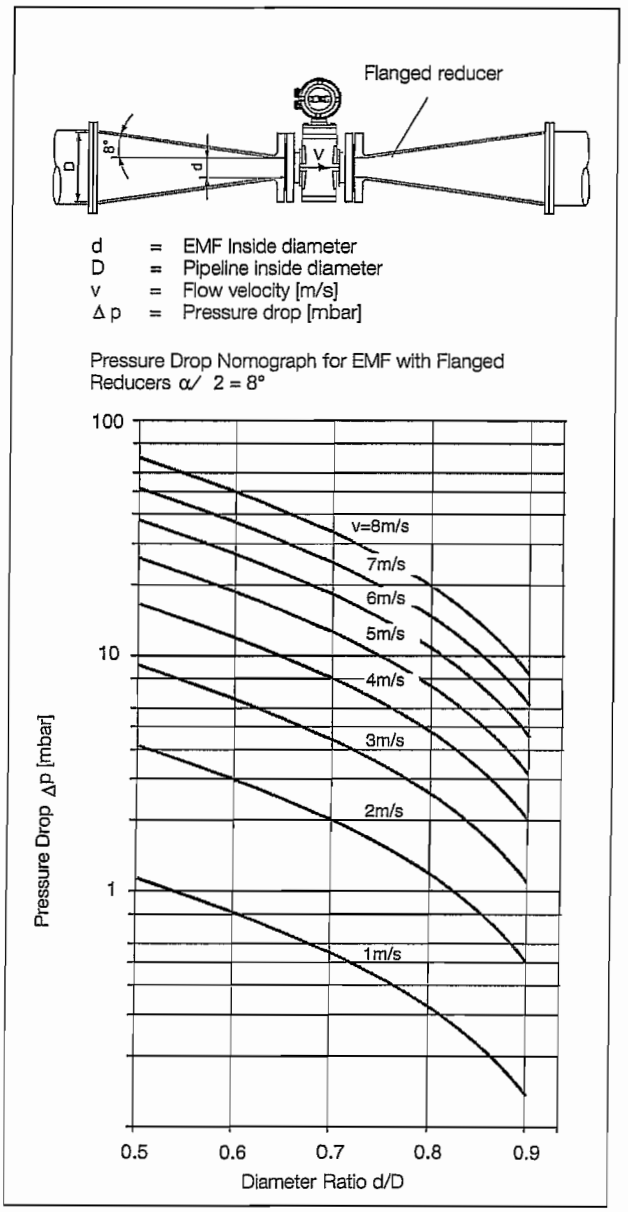

Fig. 4: Nomograph for EMF Pressure Drop Determinations

Flowmeter Sizes, Pressure Ratings, Flow Range Nomograph

Meter Size DN	Inch	Std. Press. Rating PN	Min. Flow Range Flow Velocity 0 to 0.5 m/s	Max. Flow Range Flow Velocity 0 to 10 m/s
3	1/10	40	0 to 0.2 l/min	0 to 4 l/min
4	5/32	40	0 to 0.4 l/min	0 to 8 l/min
6	1/4	40	0 to 1 l/min	0 to 20 l/min
8	5/16	40	0 to 1.5 l/min	0 to 30 l/min
10	3/8	40	0 to 2.25 l/min	0 to 45 l/min
15	1/2	40	0 to 5.0 l/min	0 to 100 l/min
20	3/4	40	0 to 7.5 l/min	0 to 150 l/min
25	1	40	0 to 10 l/min	0 to 200 l/min
32	1-1/4	40	0 to 20 l/min	0 to 400 l/min
40	1-1/2	40	0 to 30 l/min	0 to 600 l/min
50	2	40	0 to 3 m^3/h	0 to 60 m^3/h
65	2-1/2	40	0 to 6 m^3/h	0 to 120 m^3/h
80	3	40	0 to 9 m^3/h	0 to 180 m^3/h
100	4	16	0 to 12 m^3/h	0 to 240 m^3/h
125	5	16	0 to 21 m^3/h	0 to 420 m^3/h
150	6	16	0 to 30 m^3/h	0 to 600 m^3/h
200	8	10/16	0 to 54 m^3/h	0 to 1080 m^3/h
250	10	10/16	0 to 90 m^3/h	0 to 1800 m^3/h
300	12	10/16	0 to 120 m^3/h	0 to 2400 m^3/h
350	14	10/16	0 to 165 m^3/h	0 to 3300 m^3/h
400	16	10/16	0 to 225 m^3/h	0 to 4500 m^3/h
450	18	10/16	0 to 300 m^3/h	0 to 6000 m^3/h
500	20	10	0 to 330 m^3/h	0 to 6600 m^3/h
600	24	10	0 to 480 m^3/h	0 to 9600 m^3/h
700	28	10	0 to 660 m^3/h	0 to 13200 m^3/h
800	32	10	0 to 900 m^3/h	0 to 18000 m^3/h
900	36	10	0 to 1200 m^3/h	0 to 24000 m^3/h
1000	40	10	0 to 1350 m^3/h	0 to 27000 m^3/h

Flowrate Nomograph

The volumetric flowrate is a function of both the flow velocity and the flowmeter size. The Flow Range Nomograph shows the flowrates which can be metered with a specific flowmeter size and also which flowmeter sizes are suitable for a specific flowrate.

Example:

Flowrate = 7 m^3/h (maximum value = flow range end value). Suitable are flowmeter primary sizes DN 20 : 3/4" to DN 65 : 2-1/2" for flow velocities between 0.5 and 10 m/s.

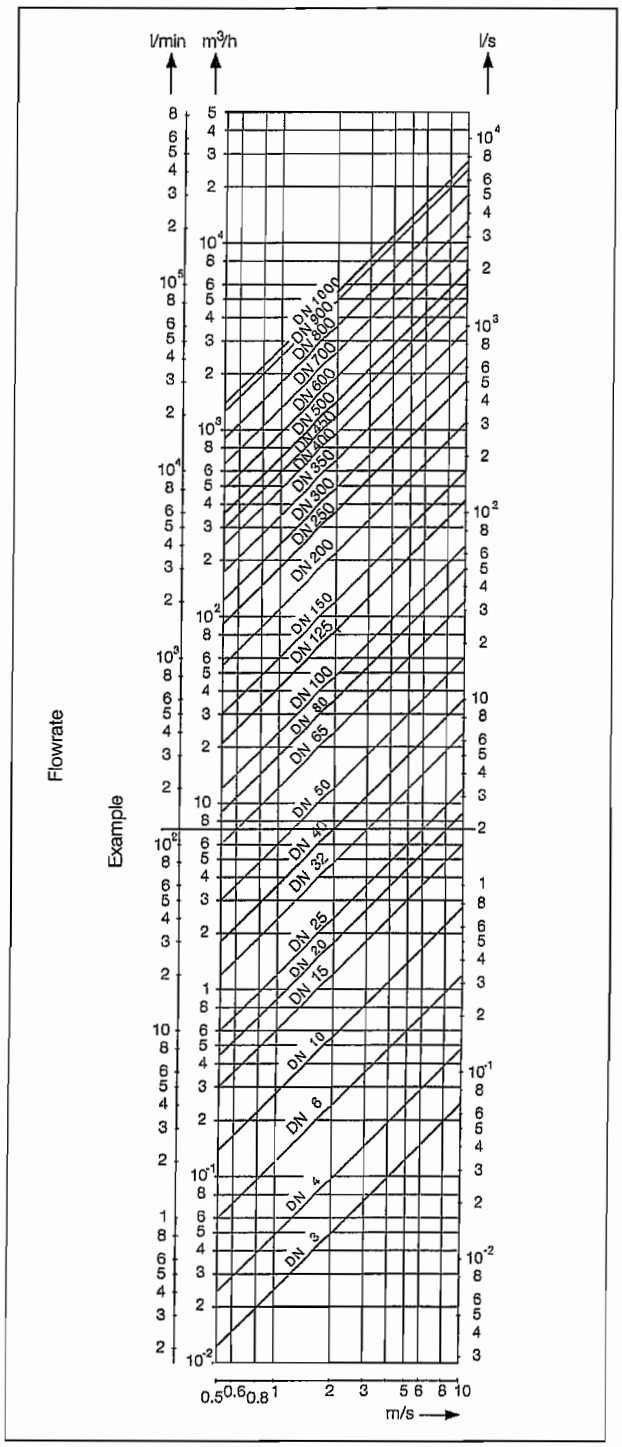

Fig. 5: Flow Range Nomograph DN 3 to DN 1000 : 1/10" to 40"

Agency Approved EMF

Approvals

The design of the measurement instrument "Electromagnetic Volume Flowrate Totalizer with Electrical Counter" has been approved by the National Institute for Science and Technology (Physikalisch-Technischen Bundesanstalt) in Braunschweig, Germany. The following approvals have been granted for the Volume Flowrate Totalizer which consists of a flowmeter primary and a converter:

6.221 / 87.12	Electromagnetic Volume Flowrate Totalizer with a Class "B" Electrical Counter for Cold Water and Waste Water
5.721 / 87.05	Electromagnetic Volume Flowrate Totalizer with Electrical Counter for Liquids other than Water

Appendix (EO6) or Appendix 5 (EO5) of the Certification Regulations of 1988 apply to the Electromagnetic Volume Flowrate Totalizer with Electrical Counter.

Certification

The Electromagnetic Volume Flowrate Totalizer is certified on the test stands in Göttingen, Germany which have been approved for certification calibrations. After the calibration has been completed, the parameters which impact the Certification Regulations, can only be changed in the presence of a Certification Agent.

Approved Flowmeter Sizes for "Cold Water and Waste Water"

Meter Size DN	Meter Size Inch	Min. Allow. Flow Range End Value (approx. 2 m/s)			Max. Allow. Flow Range End Value (approx. 10 m/s)		
25	1	0 to	2.4	m^3/h	0 to	12	m^3/h
32	1-1/4	0 to	5	m^3/h	0 to	25	m^3/h
40	1-1/2	0 to	9	m^3/h	0 to	45	m^3/h
50	2	0 to	14	m^3/h	0 to	70	m^3/h
65	2-1/2	0 to	24	m^3/h	0 to	120	m^3/h
80	3	0 to	36	m^3/h	0 to	180	m^3/h
100	4	0 to	56	m^3/h	0 to	280	m^3/h
125	5	0 to	84	m^3/h	0 to	420	m^3/h
150	6	0 to	128	m^3/h	0 to	640	m^3/h
200	8	0 to	220	m^3/h	0 to	1100	m^3/h
250	10	0 to	360	m^3/h	0 to	1800	m^3/h
300	12	0 to	500	m^3/h	0 to	2500	m^3/h
350	14	0 to	700	m^3/h	0 to	3500	m^3/h
400	16	0 to	900	m^3/h	0 to	4500	m^3/h
500	20	0 to	1420	m^3/h	0 to	7100	m^3/h
600	24	0 to	2000	m^3/h	0 to	10000	m^3/h
700	28	0 to	2800	m^3/h	0 to	14000	m^3/h
800	32	0 to	3600	m^3/h	0 to	18000	m^3/h
900	36	0 to	4600	m^3/h	0 to	23000	m^3/h
1000	40	0 to	5600	m^3/h	0 to	28000	m^3/h

Approved Flowmeter Sizes for "Liquids other than Water"

Flowmeter Size and Maximum Allowable Flowrates						
DN	Inch	Q_{max} Liter/min				
25	1	select between60	and	200	in steps of	10
32	1-1/4	select between100	and	400	in steps of	10
40	1-1/2	select between150	and	750	in steps of	50
50	2	select between250	and	1000	in steps of	50
65	2-1/2	select between400	and	2000	in steps of	100
80	3	select between700	and	3000	in steps of	100
100	4	select between900	and	4500	in steps of	100
150	6	select between2000	and	10000	in steps of	500

Minimum Flowrates and Fluids			
DN	Inch	Minimum Flowrate l/min	Fluid
25	1	8	Beer, Milk, Syrup
32	1-1/4	5	Beer, Milk, Syrup
40	1-1/2	20	Beer, Milk
50	2	200	Beer, Wort
65	2-1/2	500	Milk, Wort, Beer
80	3	500	Milk, Wort, Beer
100	4	2000	Brine, Wort
150	6	2000	Brine

Min. flow range: approx. 2.5 m/s.
Max. flow range:approx.10 m/s.

The actual flow ranges must be in accord with the values listed in the Tables. Subsequent range changes require a new calibration on an agency certified test stand.

Installation Requirements for Volume Flowrate Totalizers

The following installation requirements are to be observed:
For "Cold Water and Waste Water" the lengths of the straight pipeline sections must be at least 5 times the flowmeter size upstream and at least 2 times downstream. For "Liquids other than Water" (milk, beer, wort, brine) the values listed in the brackets in Fig. 6 apply.

For flow metering in both directions (forward and reverse) straight sections are required on both sides of the flowmeter primary with a length of at least 5 times the flowmeter size for "Cold Water and Waste Water" approved flowmeters and at least 10 times for "Liquids other than Water" approved flowmeters. The piping system must always be completely full. The signal cable length may not exceed 50 m.

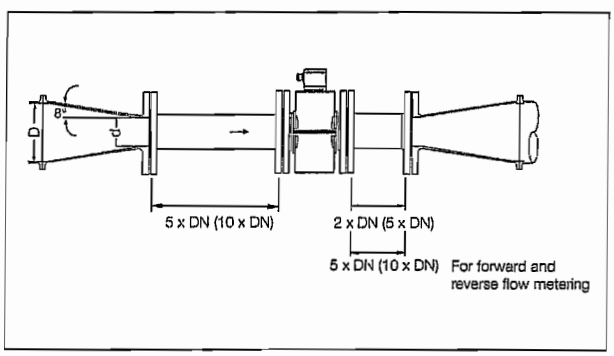

Fig. 6: Pipeline Installation, Reductions as Required

Specifications: Flanged Design Models DE41F/DE43F, Wafer Design Models DE41W/DE43W

Attention
Limits for the allowable fluid temperature (TS) and allowable pressure (PS) are a function of the liner and flange materials of the flowmeter (see Instrument Name Plate).

Material Load Curves for Model DE41F/DE43F (Flanged Design)

Max. Temperature≤ 90 °C for hard/soft rubber liners
Max. Temperature≤ 130 °C for PTFE/PFA liners

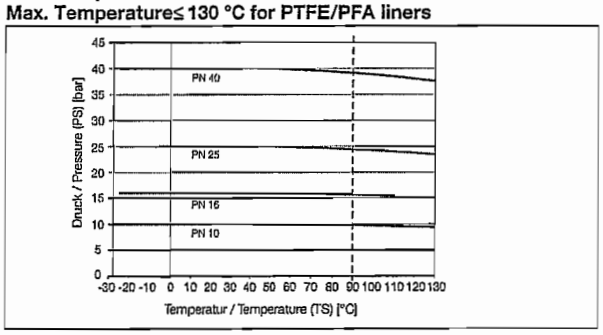

Fig. 7: DIN-Flanges SS 1.4571[316Ti] to DN 600

Max. Temperature≤ 90 °C for hard/soft rubber liners
Max. Temperature≤ 130 °C for PTFE/PFA liners

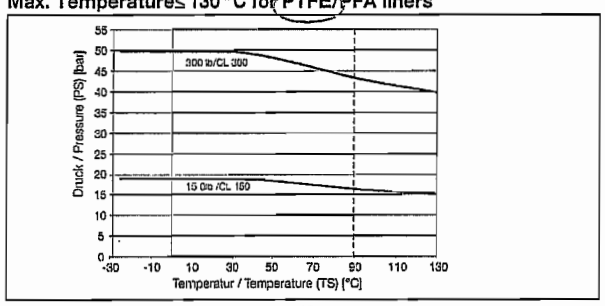

Fig. 8: ANSI-Flanges SS1.4571[316Ti] to 12" (CL150/300), to 40" (CL150)

Max. Temperature≤ 90 °C for hard/soft rubber liners
Max. Temperature≤ 130 °C for PTFE/PFA liners

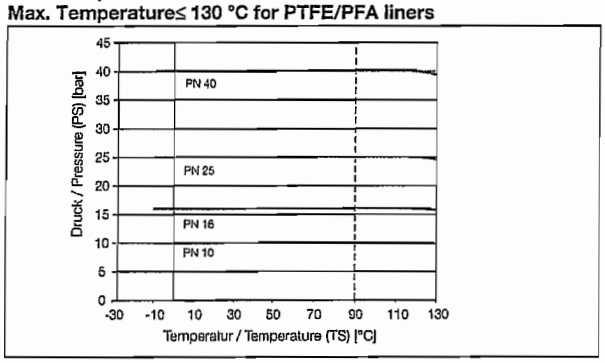

Fig. 9: DIN-Flanges Steel to DN 600

Max. Temperature≤ 90 °C for hard/soft rubber liners
Max. Temperature≤ 130 °C for PTFE/PFA liners

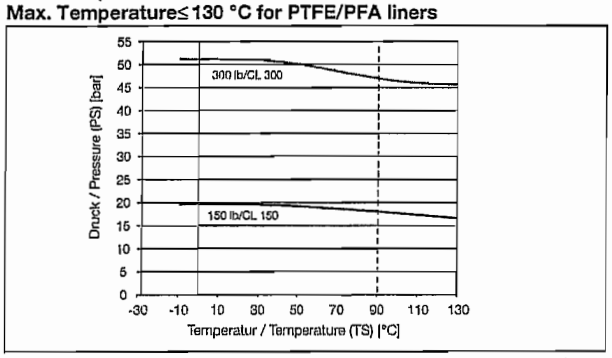

Fig. 10: ANSI-Flanges Steel to 12" (CL150/300), to 40" (CL150)

JIS 10K-B2210 Flanges SS 1.4571[316Ti] or Steel

Meter Size DN Inch	Material	PN	TS [°C]	PS [bar]
32-100 1-1/4 - 4	SS 1.4571[316Ti]	10	-25 to +130	10
32-100 1-1/4 - 4	Steel	10	-10 to +130	10

Liner: PTFE, hard/soft rubber (limited to 90 °C)

Max. Temperature ≤ 90 °C for hard/soft rubber liners

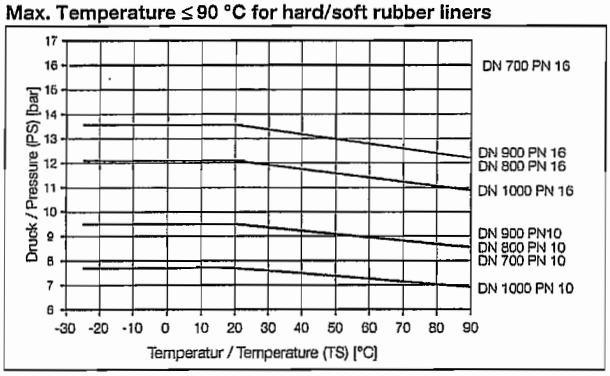

Fig. 11: DIN-Flanges SS 1.4571[316Ti] DN 700-DN 1000

Max. Temperature ≤ 90 °C for hard/soft rubber liners

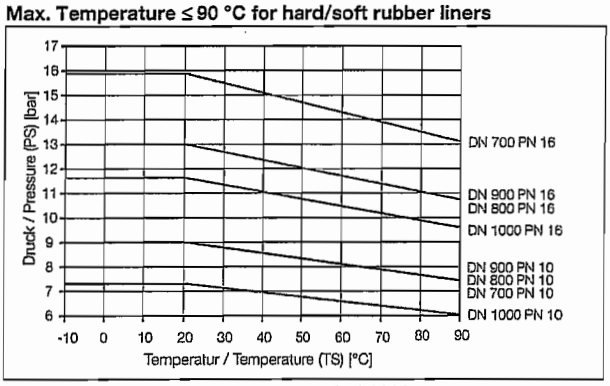

Fig. 12: DIN-Flanges Steel DN 700-DN 1000

Material Load Curves for Models DE41W/DE43W (Wafer Design)

(PFA-Liner, Wafer Design) I

DN	Inch	TS_{max} [°C]	TS_{min} [°C]	PS_{max} [bar]
3-100	1/10" - 4"	130	–10	16 (CL150)

General Specifications

Min. allow. Pressure as a function of Fluid Temperature

Liner	Meter Size DN	Meter Size Inch	$P_{Operate}$ mbar abs.	at	$T_{Operate}$ °C
Hard rubber KTW approved	15 - 250	1/2 - 10	0		< 90
	300 - 1000	12 - 40	0		< 90
Soft rubber KTW approved	50 - 250	2 - 10	0		< 90
	300 - 1000	12 - 40	0		< 90
PTFE	10 - 800	3/8 - 32	270 500		< 20 < 130
PFA	3 - 100	1/10 - 4	0		< 130

Other meter sizes, press. ratings and Temp. Classes upon request

Max. Allowable Cleaning Temperature

CIP-Cleaning	Liner Primary	T_{max} °C	t_{max} Minutes	$T_{Amb.}$ °C
Steam cleaning	PTFE, PFA	150	60	25
Liquid cleaning	PTFE, PFA	140	60	25

If the ambient temperature > 25, then the difference must be subtracted from the max. cleaning temperature.
T_{max} - Δ °C where Δ °C = T_{Amb} - 25 °C)

Max. allow. Fluid Temperatures as a Function of the Ambient Temperatures for Flowmeters with Steel Flanges

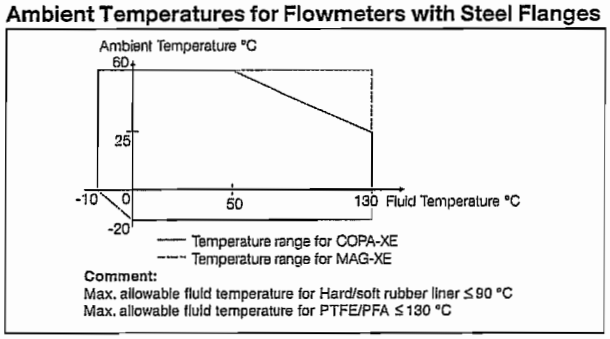

Fig. 13 Max. allow. Fluid Temperatures as a Function of the Ambient Temperatures for Flowmeters with Steel Flanges

Max. allow. Fluid Temperature as a Function of the Ambient Temperature for Flowmeters with SS Flanges

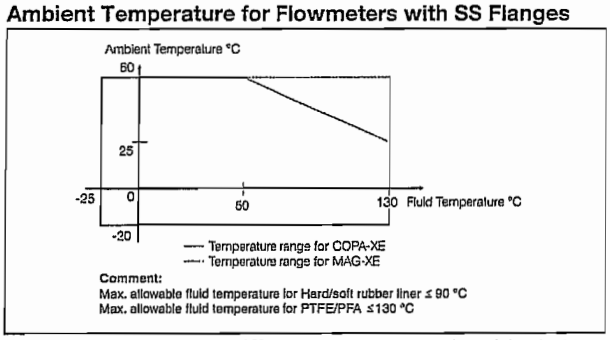

Fig. 14: Max. allow. Fluid Temperature as a Function of the Ambient Temperature for Flowmeters with Stn. Stl. Flanges

Materials, Flowmeter Primary

Part	Standard	Options
Liner	PTFE, PFA, hard rubber, soft rubber	–
Signal and ground electrodes for – hard rubber, soft rubber	SS 1.4571 [316Ti]	Hast. B-2 (2.4617), Hast. 2 C-4, Titanium, Tantalum, Platinum-Iridium
– PTFE PFA	Hast. C-4 (2.4610)	SS 1.4571 [316Ti] Hast. B-2 (2.4617) Titanium, Tantalum Platinum-Iridium
Ground plate for flanged and wafer design flowmeters	SS 1.4571 [316Ti]	Upon request
Protection plate	SS 1.4571 [316Ti]	Upon request

Process Connection Materials

Part	Standard	Options
Flanges DN 3 - 15 : 1/10"-1/2" DN 20 - 300 : 3/4"-12"	 SS 1.4571 [316Ti] (standard) Steel (galvanized)	 1.4571[316Ti]
DN 350 - 1000 : 14"-40"	Steel (painted)	1.4571[316Ti]

Part	Standard	Options
Housing DN 3 - DN 300 1/10" - 12"	Two piece housing Cast Alum., painted, Paint coat, 60 µm thick RAL 9002	–
DN 350 - 1000 14" - 40"	Welded steel construction, painted Paint coat, 60 µm thick RAL 9002	
Connection box	Cast Alum., painted, Paint coat 60 µm thick Frame: dark gray, RAL 7012 Cover: light gray, RAL 9002	–
Meter tube	SS 1.4301 [304]	–
Pg-Connector	Polyamide	PVDF

Protection Class per EN 60529

IP 67
IP 68 (only for MAG-XE flowmeter primary)

Pipeline Vibrations

Maximum allowable 15 m/s^2 (10 - 150 Hz)

Designs

The flanged flowmeters comply with the installation lengths defined in VDI/VDE 2641, ISO 13359 or DVGW (Working Paper W420, Design WP, ISO 4064 short).

Temperature Diagram

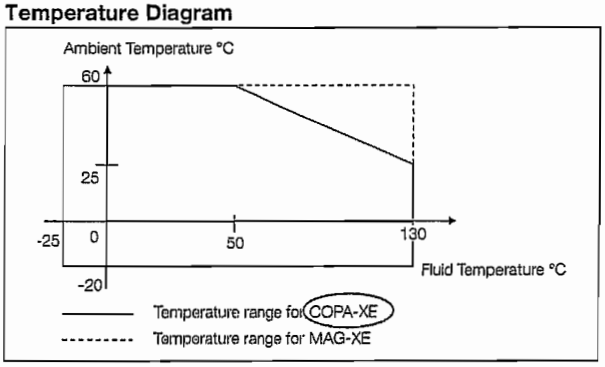

Fig. 18: Maximum Allowable Ambient Temperatures as a Function of the Fluid Temperature for Stn. Stl Process Connections and Wafer Designs

Fluid Temperatures
-25 °C to +130 °C, CIP-cleanable, see Temperature Diagram and Max. Allowable Cleaning Temperature.

Storage Temperature
-20 °C to +70 °C

Materials, Flowmeter Primary

Liner Material	Electrode Material		Electrodes Design	
	Standard	Options	Standard	Options
PFA	Hast.-C4 (1.4539 for Food Ind. fittings & Tri-Clamp	Hast.-B2 SS 1.4539 SS1.4571[316Ti] Tantalum, Titanium, Platinum-Iridium	Flat head	Pointed head (≥ DN 10 3/8"

Process Connection Materials

	Standard
Flanges per DIN	SS 1.4571 [316Ti]
Wafer Design	None
Weld stubs	SS 1.4404 [316L]
Food Ind. Fittings per DIN 11851	SS 1.4404 [316L]
Tri-Clamp per DIN 32676	SS 1.4404 [316L]
External threads	SS 1.4404 [316L]

Connection Box	Standard	Option
COPA-XE	Cast Alum., painted, Paint colors Frame: dark gray, RAL 7012 Cover: light gray, RAL 9002	Converter housing made completely of Stn. Stl. 1.4301 [304]
MAG-XE	SS 1.4301 [304]	–
Meter Tube	SS 1.4301 [304]	–
PG-Connector	Polyamide	PVDF
Housing, Flowmeter Primary	Deep drawn housing SS 1.4301 [304]	

Gasket Material

Process Connections	Gasket Material
Wafer Design	None
Weld stubs, Food Ind. Fittings, Tri-Clamp, External Threads	EPDM (Ethylene-Propylene) std. with FDA-Approval, Silicone with FDA-Approval (Option)
Housing flat gasket	Silicone

Protection Class per EN 60529
IP 67 Standard
IP 68 (only for MAG-XE flowmeter primary)

Pipeline Vibrations
Maximum allowable 15 m/s^2 (10 - 150 Hz)

Dimensions Flowmeter Primary Flanges per DIN and ANSI, Mod. DE41F & DE43F

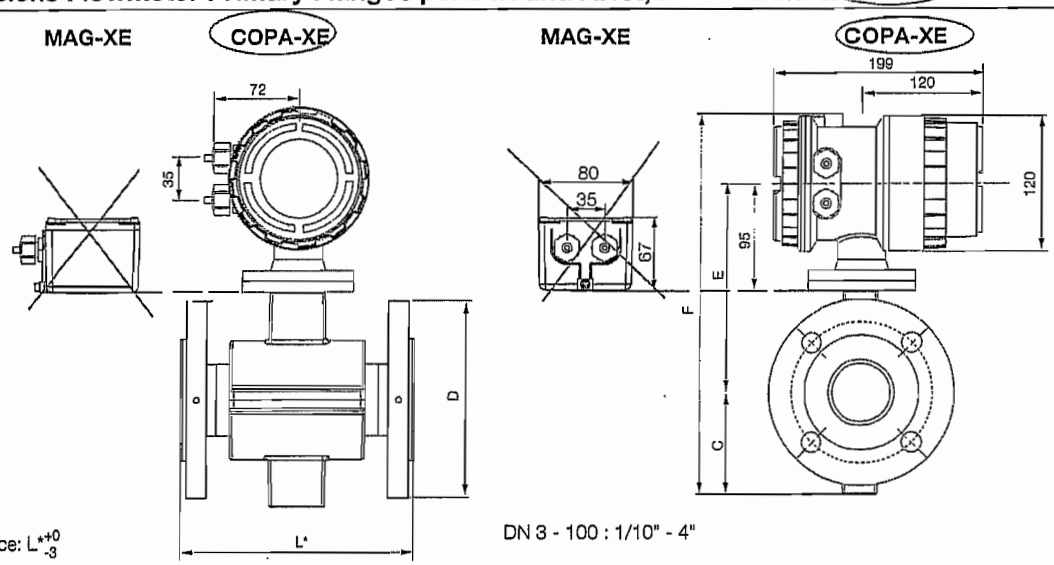

Tolerance: L^{*+0}_{-3}

DN 3 - 100 : 1/10" - 4"

DIN Flanges

Dimensions							Weight appr. kg	
DN	PN 1)	D	L 2)3)	F	C	E	Compact Design	Remote Primary
3-8	10-40	90	130	281	62	157	5	4
10	10-40	90	200	281	62	157	5.5	4.5
15	10-40	95	200	281	62	157	5.5	4.5
20	10-40	105	200	292	73	168	6	5
25	10-40	115	200	292	73	168	6.5	5.5
32	10-40	140	200	297	78	173	8	7
40	10-40	150	200	301	82	177	8.5	7.5
50	10-40	165	200	337	90	185	11	9
65	10-40	185	200	365	104	199	16	13
80	10-40	200	200	377	110	205	19	16
100	10-16	220	250	417	130	225	20	17

ANSI Flanges

Dimensions						Weight			
						Compact Design		Remote Primary	
		CL 150	CL 300	L 3)4)		CL 150	CL 300	CL 150	CL 300
DN	Inch	D	D	ISO 13359	ABB (old lay length)	appr. kg	appr. kg	appr. kg	appr. kg
3-8 5)	1/8-5/16 6)	89	96	130	130	5.5	5.5	4	4
10	3/8 6)	89	96	200	270	5.5	5.5	4.5	4.5
15	1/2	89	96	200	270	5.5	5.5	4.5	4.5
20	3/4	98	118	200	270	6	6	5	5
25	1	108	124	200	270	6.5	6.5	5.5	5.5
32	1 1/4	118	134	200	280	8	8	7	7
40	1 1/2	127	156	200	280	8.5	8.5	7.5	7.5
50	2	153	165	200	280	10	10	9	9
65	2 1/2	178	191	200	330	14	14	13	13
80	3	191	210	200	340	17	17	16	16
100	4	229	254	250	400	18	18	17	17

For dimensions F, C, E see Table DIN Flanges

1) Other pressure ratings upon request
2) If one ground plate (mounted on one flange) is installed, the dimension L increases as follows: DN 3 - 100:1.10"-4" by 3 mm.
3) If one protection plate (mounted on one flange) is installed, the dimension L increases as follows: DN 3 - 100:1.10"-4" by 6 mm.
4) If two protection flanges (mounted to each ANSI flange, old lay length) are installed the dimension L increases as follows: 1/10" - 3" by 20 mm, 4" and larger by 25 mm
5) Connection flange DN 10
6) Connection flange 1/2"

All dim's in mm

ISO Projection Method E

Fig. 19: Dimensions Flowmeter Primary DN 3 :1/10" to DN 100:4", Flanges per DIN and ANSI

Ordering Information Flanged Flowmeters, Mod. DE43F and DE41F

In addition to the Ordering Number please provide the following information: Fluid, fluid temperature, operating pressure, flow range, pipeline type, (ground plate, ground electrodes)

Ordering Number	COPA-XE DE43F	MAG-XE DE41F
Liner		
Hard rubberDN 15 - 10001/2" - 40"	H	H
Soft rubberDN 50 - 10002" - 40"	S	S
PTFE DN 10 - 6003/8" - 24"	T	T
PFA DN 3 - 1001/10" - 4"	P	P
Meter Size		
DN 3 1/10"	03	03
DN 4 5/32"	04	04
DN 6 1/4"	06	06
DN 8 5/16"	08	08
DN 10 3/8"	10	10
DN 15 1/2"	15	15
DN 20 3/4"	20	20
DN 25 1"	25	25
DN 32 1-1/4"	32	32
DN 40 1-1/2"	40	40
DN 50 2"	50	50
DN 65 2-1/2"	65	65
DN 80 3"	80	80
DN 100 4"	1H	1H
DN 125 5"	1Q	1Q
DN 150 6"	1F	1F
DN 200 8"	2H	2H
DN 250 10"	2F	2F
DN 300 12"	3H	3H
DN 350 14"	3F	3F
DN 400 16"	4H	4H
DN 450 18"	4F	4F
DN 500 20"	5H	5H
DN 600 24"	6H	6H
DN 700 28"	7H	7H
DN 800 32"	8H	8H
DN 900 36"	9H	9H
DN 1000 40"	1T	1T
Signal/Ground Electrode Material [1]		
SS (1.4571[316Ti])/ none (std. for hard/soft rubber)	S	S
Hastelloy B-2 (2.4617)/ none	B	B
Hastelloy C-4 (2.4610)/ none (standard tor PTFE/PFA)	H	H
Titanium/ none	M	M
Tantalum/ none	T	T
SS (1.4539)/ none	F	F
Platinum-Iridium/ none	P	P
SS (1.4571)/ with	E	E
Hastelloy B-2 (2.4617)/ with	N	N
Hastelloy C-4 (2.4610)/ with	O	O
Titanium/ with	I	I
Tantalum/ with	Q	Q
SS (1.4539)/ with	R	R
Platinum-Iridium/ with	G	G
Pressure Rating		
PN 10	C	C
PN 16	D	D
PN 25	E	E
PN 40	F	F
JIS K10 (only up to DN 100:4")	K	K
ANSI CL 150old installation length (only for replacements)	P	P
ANSI CL 300old installation length (only for replacements)	Q	Q
ANSI CL 150ISO installation length	R	R
ANSI CL 300 ISO installation length	S	S
Process Connection Material Steel (standard from DN 20:3/4")	1	1
1.4571[316Ti] Std.DN3-15:1/10"-1/2"	3	3

[1] Ground electrodes available in meter sizes DN 3 - 300:1/10" - 12"
A conductive ground element in integrated in the hard/soft rubber liners in meter sizes DN 125 - 1000:5" - 40" as standard.
Ground electrodes not required.

Continued on next Page

	COPA-XE	MAG-XE
Ordering Number	**DE43F**	**DE41F**
Accessories		
None	A	A
Protection plates 1.4571[316Ti] (both sides)	B	B
Ground plate 1.4571[316Ti] (one side[2])	C	C
Protection flanges 1.4571[316Ti] (both sides[3])	D	D
Temperature Range		
Standard temperature < 130 °C	S	S
Certificates		
Standard (none)	A	A
Material Certificate 3.1B per EN10204 & Press. Test per AD-2000	D	D
Pressure Test per AD-2000	G	G
Inspection Test Report per EN10204 3.1B	F	F
Calibration Certificates		
None	A	A
Certified for Cold/Waste Water (DN 25 - 1000:1" - 40")	B	B
Certified for Liquids other than Water	C	C
Protection Class	IP 67 (Cable connector threads see Section "Application") 2	IP 67 (thds. for cable connector M20 x1.5), std. 2
		IP 68 (thds. for cable connector PG 13.5) 3
		IP 67 (thds. for cable connector NPT 1/2") 4
		IP 67 (thds. for cable connector PF 1/2") 5
Supply Power	High voltage 85 - 253V AC G	
	Low voltage 16.8 - 26.4V AC/16.8 - 31.2V DC K	
Display	Magnet Stick operation and lighted display D	
In-/Output Options		
Current outp. +Pulse outp. active +Contact inp. +Contact outp.	01	
Current outp. +Pulse outp. active +Contact inp. +Contact outp. +HART-Protocol	02	
Current outp. +Pulse outp. passive +Contact inp. +Contact outp.	03	
Current outp. +Pulse outp. passive +Contact inp. +Contact outp. +HART-Protocol	04	
Current outp. +Pulse outp. passive +Contact outp. +RS485	05	
Pulse outp. passive +Contact outp. +PROFIBUS DP	06	
PROFIBUS PA 3.0	14	
FOUNDATION Fieldbus	15	
PROFIBUS PA 3.0 (with M12 plug)	16	
Application		
Converter housing with threads for cable connector M 20 x 1.5 (standard)	0	
Converter housing with threads for cable connector NPT 1/2"	2	
Converter housing with threads for cable connector PF 1/2"	3	

[2] ground plate one side mounted on flange (only available for flowmeter primaries ≤ DN 300:12")
[3] Only in combination with ANSI-Flanges (old installation length)

Additional Ordering Information to be provided in writing.

Name Plate	**Excitation Frequency**	
German	DN 3 - 1000:1/10"-40"	/6 1/4 Hz (50 Hz line)
English	DN 3 - 100:1/10"-4"	/12 1/2 Hz (50 Hz line)
French	DN 3 - 1000:1/10"-40"	/7 1/2 Hz (60 Hz line)
	DN 3 - 100:1/10"-4"	/15 Hz (60 Hz line)

Electrode Design
Standard
Pointed head (from DN10/3/8", SS1.4539), for high grease content

Specifications Converter for COPA-XE and MAG-XE

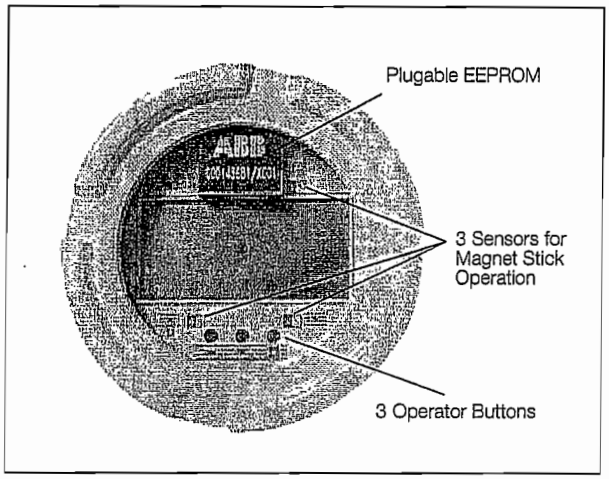

Fig. 31: Converter Keypad and Display

Flow Range
Continuously adjustable between 0.5 and 10 m/s

Accuracy
≤ 0.5 % of rate

Reproducibility
≤ 0.15 % of rate

Minimum Conductivity
5 µS/cm
(20 µS/cm for demineralized water)

Response Time
For a step change 0-99 % (corresponds to 5 τ) ≥ 1 s

Supply Power
High voltage AC: 85-253 V
Low voltage AC: 16.8-26.4 V
Low voltage DC: 16.8 - 31.2 V, ripple: < 5 %

Magnetic Field Supply
6 1/4, 7 1/2 Hz 12½ Hz, 15 Hz
(50/60 Hz supply power line frequency)

Power
≤ 14 VA for AC supply power (flowmeter primary incl. converter)
≤ 6 W for DC supply power DC (flowmeter primary incl. converter)

Ambient Temperature
-20 to +60 °C see Temperature Diagram Page 9

Electrical Connections
Spring loaded screwless terminals

Protection Class per EN 60529
IP 67 IP 68 (only MAG-XE flowmeter primaries)

Forward/Reverse Flow Metering
Flow direction is indicated by direction arrows in the display and signalled over the optocoupler output (ext. contact output).

Display

Includes a lighted display. Data can be entered using the 3 keypad buttons or, without opening the housing, by using the Magnet Stick.

2x16-character full graphic LCD-dot matrix-display. The internal flow is totalized separately for each flow direction in one of 16 different direct reading engineering units. The flowrate is displayed in percent or in one of 45 different direct reading engineering units. The converter housing can be rotated by 90°. The display can be installed in 3 positions assuring optimal readability. In multiplex operation, in addition to the display selections for the 1st and 2nd line, the flowrate can be displayed in %, direct reading engineering units, or as a bar-graph, the totalizer value for the forward or reverse directions, the TAG No. or current output value i.

Converter Housing Design Options

For Model COPA XE
Compact Design with converter housing made of cast light metal, painted, paint coat 60 µm thick, rear section RAL 7012 dark gray, front section (cover) RAL 9002 light gray

Option:
Converter housing made of stainless steel

For Model MAG-XE
a) Field mount housing made of cast light metal, painted paint coat 60 µm thick, rear section RAL 7012 dark gray, front section (cover) RAL 9002 light gray
b) 19" Insert
c) Panel mount housing
d) Housing for rail mounting

Weight:
COPA-XE: see Dimensions section
MAG-XE: Field mount housing: 4.5 kg
19" Insert: 1.5 kg
Rail mount housing: 1.2 kg
Panel mount housing 1.2 kg

Signal Cable (only for MAG-XE)
The maximum cable length between the flowmeter primary and the converter is 50 m. Each flowmeter system is shipped with a 10 m long signal cable. If a length longer than 10 m is required, it should be ordered using Part No. D173D018U02.

Display

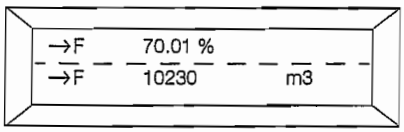

The instantaneous flowrate in % of the flow range setting or direct reading engineering units is displayed. The value of the integrated flowrate is displayed in the 2nd line (including units).

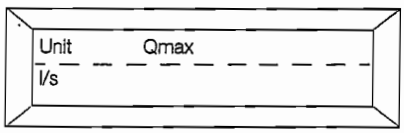

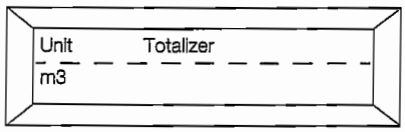

The flowrate can be displayed in percent or one of 45 different direct reading engineering units. The flow totals can be displayed in one of 16 different units including liters, gallons, cubic meters, tons (if a density has been entered). In addition it is possible to configure user defined units.

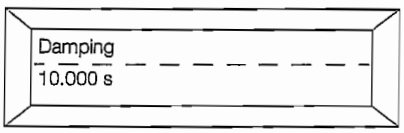

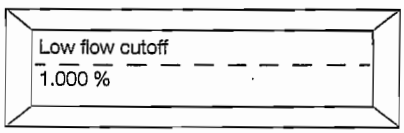

The low flow cutoff can be set between 0 and 10 % of max. (applies to the current and pulse outputs and the displayed values).

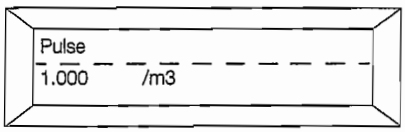

The pulse factor, which can be set between 0.001 and 1000, is a multiplier for the values displayed.

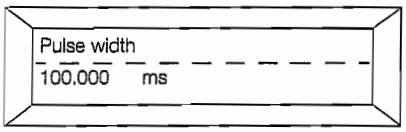

The pulse width can be set between 0.1 ms and 2000 ms and is automatically checked.

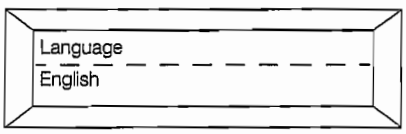

There are a number of languages available for the display.

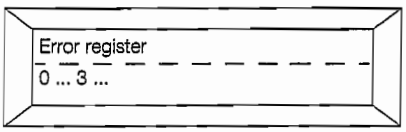

Automatic self monitoring with a display of the error diagnostics and a signal over the contact output. All detected errors are stored in the error register.

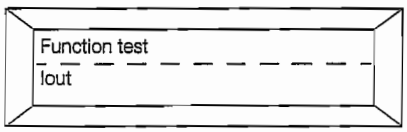

The individual subassemblies in the converter can be tested. All outputs can be simulated for start-up and test purposes.

Isolation In- / Outputs

The current output and the pulse output are isolated from the input circuit and from each other.

1.) Analog Output Signals

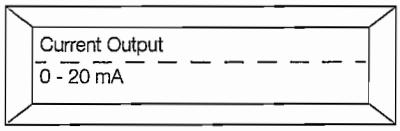

a) Current output (Terminals +/-)
0/4-20 mA load ≤ 600 Ω; 0/2-10 mA, load ≤ 1200 Ω;
0-5 mA load ≤ 2400 Ω selectable. Terminals: +/-

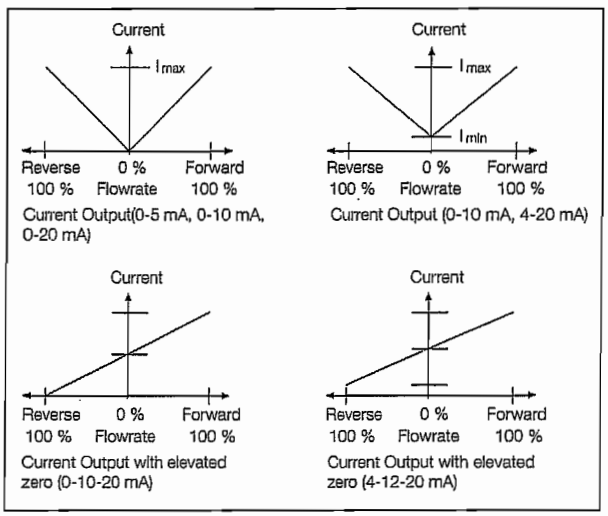

b) Scaled Pulse Output (Terminals V8, V9 or Ux, V8)
Scaled pulse output max. 5 kHz, pulse factor which can be set between 0.001 and 1000 is a multiplier for the value displayed (1 pulse/m^3 x 1000). The pulse width can be set between 0.1 ms and 2000 ms.
A change between an active or passive configuration can be made using jumpers.

Design	Optocoupler Passive	Active
Function	E9, C9	9, 10
Operating voltage	0 V ≤ U_{CEL} ≤ 2 V 16 V ≤ U_{CEH} ≤ 30 V	16 V ≤ U ≤ 30 V
Operating current and frequency	0 mA ≤ I_{CEH} ≤ 0.2mA 5 mA ≤ I_{CEL} ≤ 220 mA fmax ≤ 5 kHz	20 mA ≤ I ≤ 150 mA f_{max} = 4 Hz pulse width: ≤ 50 ms pulse: 16 V ≤ 25 ms On/off ratio: ≥ 1:4 (Ton : Toff)
		2 mA ≤ I ≤ 20 mA f_{max} = 5 kHz 16 V ≤ U ≤ 30 V

c) Contact Output
The following functions can be assigned to the contact output in the software:
System monitor: Normally opened or closed contact
Empty pipe: Normally opened or closed contact
Forward/Reverse: Contact closes for forward flow direction
Max-Alarm, Min-Alarm: Normally opened or closed contact
MAX-MIN-Alarm: Normally opened or closed contact

Optocoupler, (Terminals P7, G2 or Ux, P7)
16 V ≤ U_{CEH} < 30 V, 0 V ≤ U_{CEL} < 2 V
0 mA ≤I_{CEH} < 0.2 mA, 2 mA < I_{CEL} < 220 mA

d) Contact Input
The following functions can be assigned to the contact input in the software:

- Ext. Zero Return: When the pipeline empties all the outputs can be turned off.
- Ext. Totalizer Reset: The internal totalizer values can be reset over the external contact.
  Optocoupler, Terminals X1, G2
  16 V < U < 30 V, Ri 2 kOhm
- Ext. Totalizer Stop: Independent of the instantaneous flowrate, the flow integration can be stopped.

Empty Pipe Signal
If the "automatic empty pipe circuit" is used, a signal can be transmitted for an – empty pipe – condition.

In addition, the current output can be set to "low" or "high", and the pulse totalization interrupted.

The option "empty pipe circuit" requires a conductivity ≥ 20 µS/cm, and a meter size ≥ DN 10 : 3/8"

For the optocoupler specifications, see Contact Output

Interconnection Diagram COPA-XE, Connection Options for Analog Communication (incl. HART)

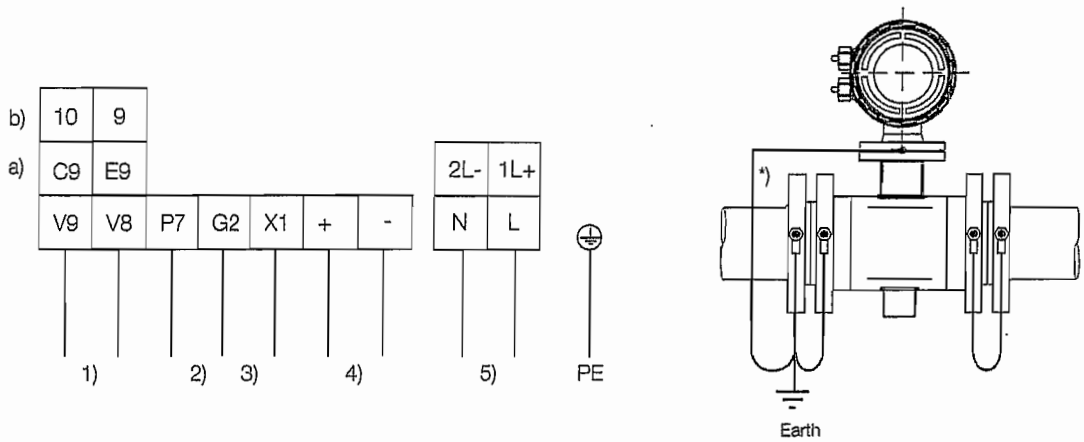

1) a) Scaled Pulse Output, passive, Pulse width adjustable between 0.1 ms and 2000 ms,
Terminals: V8, V9, Function E9, C9
Optocoupler specifications:
f_{max} 5 kHz
$0\ V \leq U_{CEL} \leq 2\ V$, $16\ V \leq U_{CEH} \leq 30\ V$
$0\ mA \leq I_{CEH} \leq 0.2\ mA$, $2\ mA \leq I_{CEL} \leq 220\ mA$

b) Scaled Pulse Output, active Pulse width adjustable between 0.1 and 2000 ms, Terminals V8, V9, Function 9, 10
$20\ mA < I \leq 150\ mA$; $f_{max} \leq 4$ Hz, pulse width ≤ 50 ms, pulse $T_{16V} \leq 25$ ms, $16\ V \leq U \leq 30\ V$; on/off ratio 1:4 ($T_{on} : T_{off}$),
f_{max} 5 kHz, $2\ mA \leq I \leq 20\ mA$; $16\ V \leq U \leq 30\ V$

2) Contact Output, Function assigned in the software as System Monitor, Empty Pipe, Max.-Min.-Alarm or F/R signal*, Terminals G2, P7
Optocoupler specifications:
$0\ V \leq U_{CEL} \leq 2\ V$, $16\ V \leq U_{CEH} \leq 30\ V$;
$0\ mA \leq I_{CEH} \leq 0.2\ mA$, $2\ mA \leq I_{CEL} \leq 220\ mA$

3) Contact Input, Function assigned in the software as external Zero Return, external Totalizer Reset, external Totalizer Stop
Terminals: G2, X1
Optocoupler, $16\ V \leq U \leq 30\ V$, $Ri = 2k\Omega$

4) Current Output selectable, Terminals: +/-, load $\leq 600\ \Omega$ for 0/4 to 20 mA, load $\leq 1200\ \Omega$ for 0/2 to 10 mA, load $\leq 2400\ \Omega$ for 0 to 5 mA,
Option: HART-Protocol

5) Supply Power, see Name Plate

*) The default factory setting is the Forward Direction signal.

Fig. 37: Interconnection Diagram COPA-XE, Connection Options for Analog Communication (incl. HART)

Earth Tech (Canada) Inc.

Reviewed for general conformance with design intent. Responsibility for detailed design in the shop drawings rests with the Contractor.

Responsibility for verification and correlation of field dimensions, fabrication process, techniques of construction, installation and coordination of all parts of the work rests with the Contractor.

REVIEWED ✓

REVIEWED AS MODIFIED

REVISE AND RE-SUBMIT

NOT REVIEWED

Project No. C28/16/79538

Date: 12/9/06 By: M. Youlson

SEC. 14:
VFD'S CONTROL PANEL

METCON
SALES & ENGINEERING LIMITED

Project Name: **CITY OF WINNIPEG-ONSITE HYPOCHLORITE GENERATION EQUIPMENT**
Project No: **06-ES5564**
Date: **August 2006**

SUBMITTAL DRAWINGS

Section 14

VFD's CONTROL CABINET

Drawings

Bill of Materials

Brochures and Catalogue Sheets

- ABB VFD
- Hammond Enclosure
- ABB Disconnect Switch
- ABB Contactor
- AB Push Button
- AB Selector Switch
- AB Pilot Light
- Edison/Bussmann Fuse Blocks
- Edison/Bussmann Fuse
- ITC Fuse Holder

Prepared by: **Industrial Solutions**

Checked by: **Metcon**

PROJECT:
City of Winnipeg
Onsite Hypochlorite Generation system

El. CABINET
4 X ACS800

PUMPS P-J600A, P-J620A, P-J640A, P-J66A

INDUSTRIAL SOLUTIONS AND AUTOMATION INC			
Approvals	Date	Control cabinet 4 X 10HP	
Drawn Zlatan A	Aug 12 2006	Front Page	
Checked		Dwg. No El. Cabinet	Rev A
Reviewed Yoga A			Sheet of

49-11242-15-R1
Winnipeg WTP

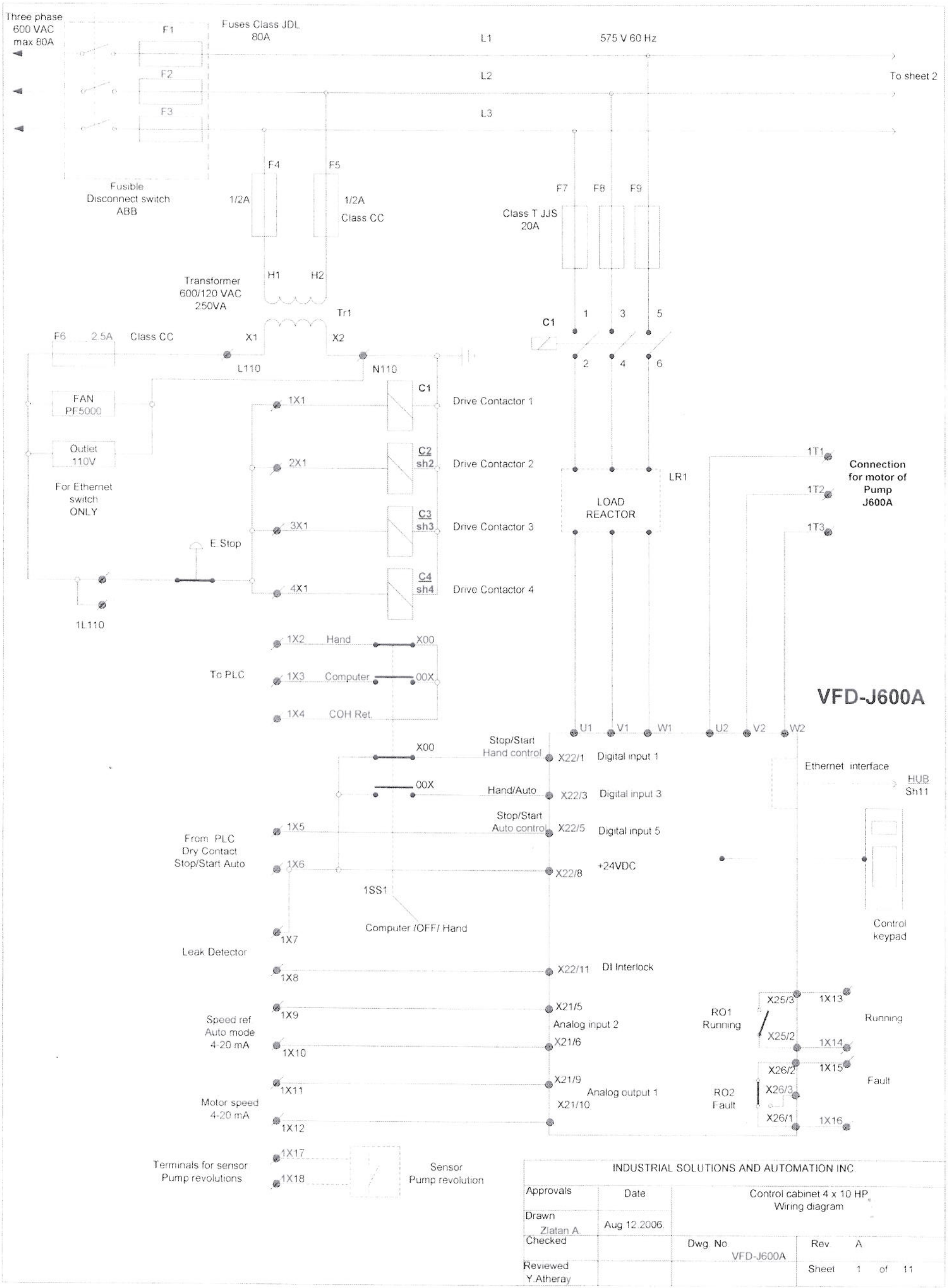

49-11242-15-R1
Winnipeg WTP

Earth Tech (Canada) Inc.

Reviewed for general conformance with design intent. Responsibility for detailed design in the shop drawings rests with the Contractor.

Responsibility for verification and correlation of field dimensions, fabrication process, techniques of construction, installation and coordination of all parts of the work rests with the Contractor.

REVIEWED _____

REVIEWED AS MODIFIED _____

REVISE AND RE-SUBMIT _____

NOT REVIEWED _____

Project No. _____

Date: _____ By: _____

CH2M HILL Canada Limited
CONSULTING ENGINEERS
SUBMITTAL DISPOSITION

	REVIEWED
✓	REVIEWED AS MODIFIED
	REVISE AND RE-SUBMIT
	NOT REVIEWED

JOB No. 321352 SUBMISSION No. 2

DATE 27/07 BY Jim

SPEC. 11242 SECT. ____ DISTRIBUTION
FROM: ____ CLIENT ____ OFFICE 1 CONTR. ____

LOCATION: WINNIPEG

SERVICE: _____

REFER TO CONTRACT SPECIFICATIONS FOR SUBMITTAL REQUIREMENTS
CH2M HILL Canada Limited's review of this submittal does not relieve the manufacturer of complete and exclusive responsibility for the design and manufacture of this product in conformity with specifications of this project.

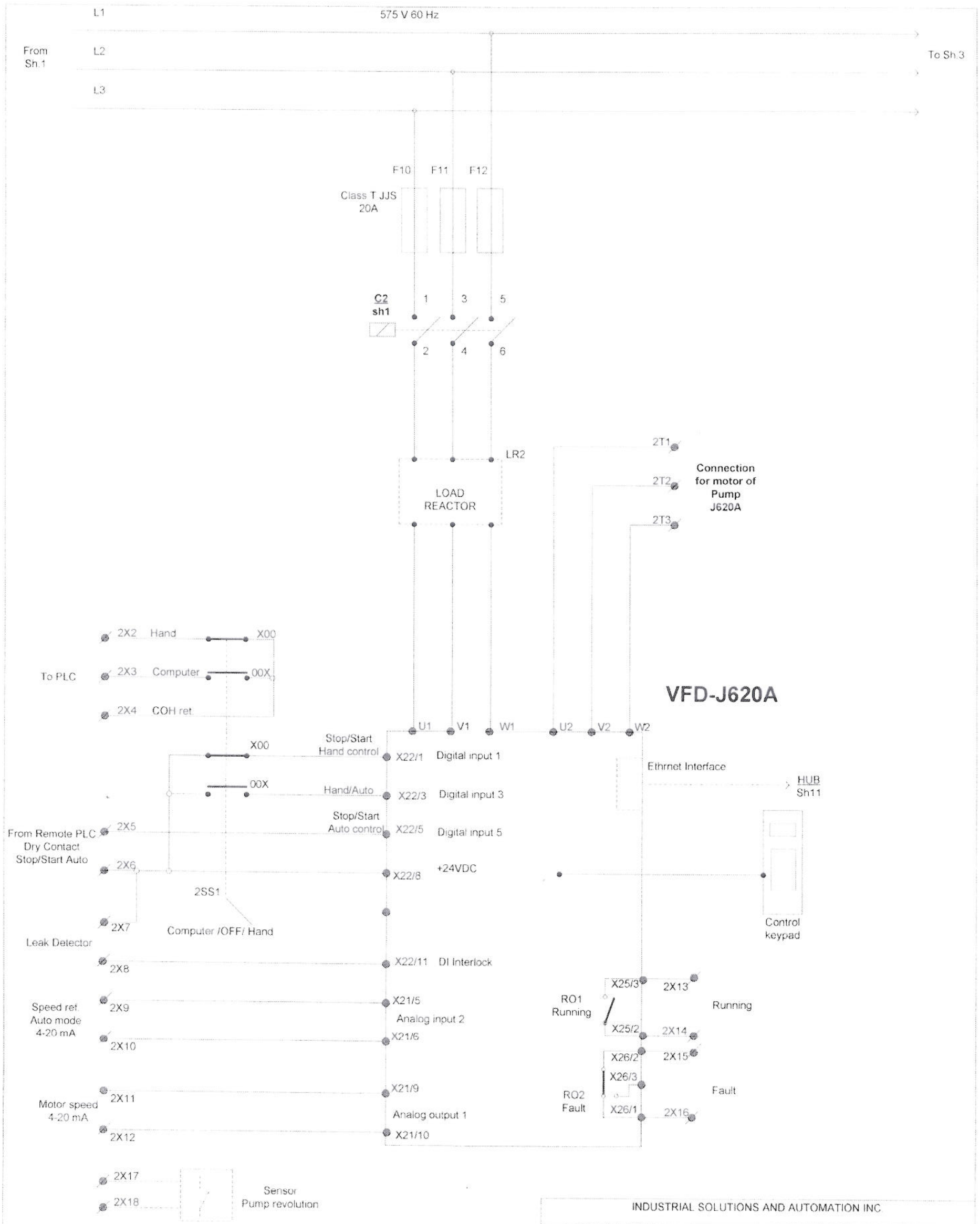

INDUSTRIAL SOLUTIONS AND AUTOMATION INC			
Approvals	Date	Control cabinet 4 x 10HP Wiring diagram	
Drawn Z. Avdic	Aug.12.2006		
Checked		Dwg. No. VFD-620A	Rev. A
Reviewed Y.Atheray			Sheet 2 of 11

Earth Tech (Canada) Inc.

Reviewed for general conformance with design intent. Responsibility for detailed design in the shop drawings rests with the Contractor.

Responsibility for verification and correlation of field dimensions, fabrication process, techniques of construction, installation and coordination of all parts of the work rests with the Contractor

REVIEWED _____

REVIEWED AS MODIFIED _____

REVISE AND RE-SUBMIT _____

NOT REVIEWED _____

Project No. _____

Date: _____ By: _____

CH2M HILL Canada Limited
CONSULTING ENGINEERS
SUBMITTAL DISPOSITION

REVIEWED

REVIEWED AS MODIFIED

REVISE AND RE-SUBMIT

NOT REVIEWED

JOB No. 321352 SUBMISSION No. 2

DATE Jan 22/07
FILE

DISTRIBUTION

SPEC 11242 PAGE 1
ITEM COMP.

LOCATION: WINNIPEG

SERVICE:

REFER TO CONTRACT SPECIFICATIONS FOR SUBMITTAL REQUIREMENTS
CH2M HILL Canada Limited's review of this submittal does not relieve the manufacturer of complete and exclusive responsibility for the design and manufacture of this product in conformity with specifications of this project.

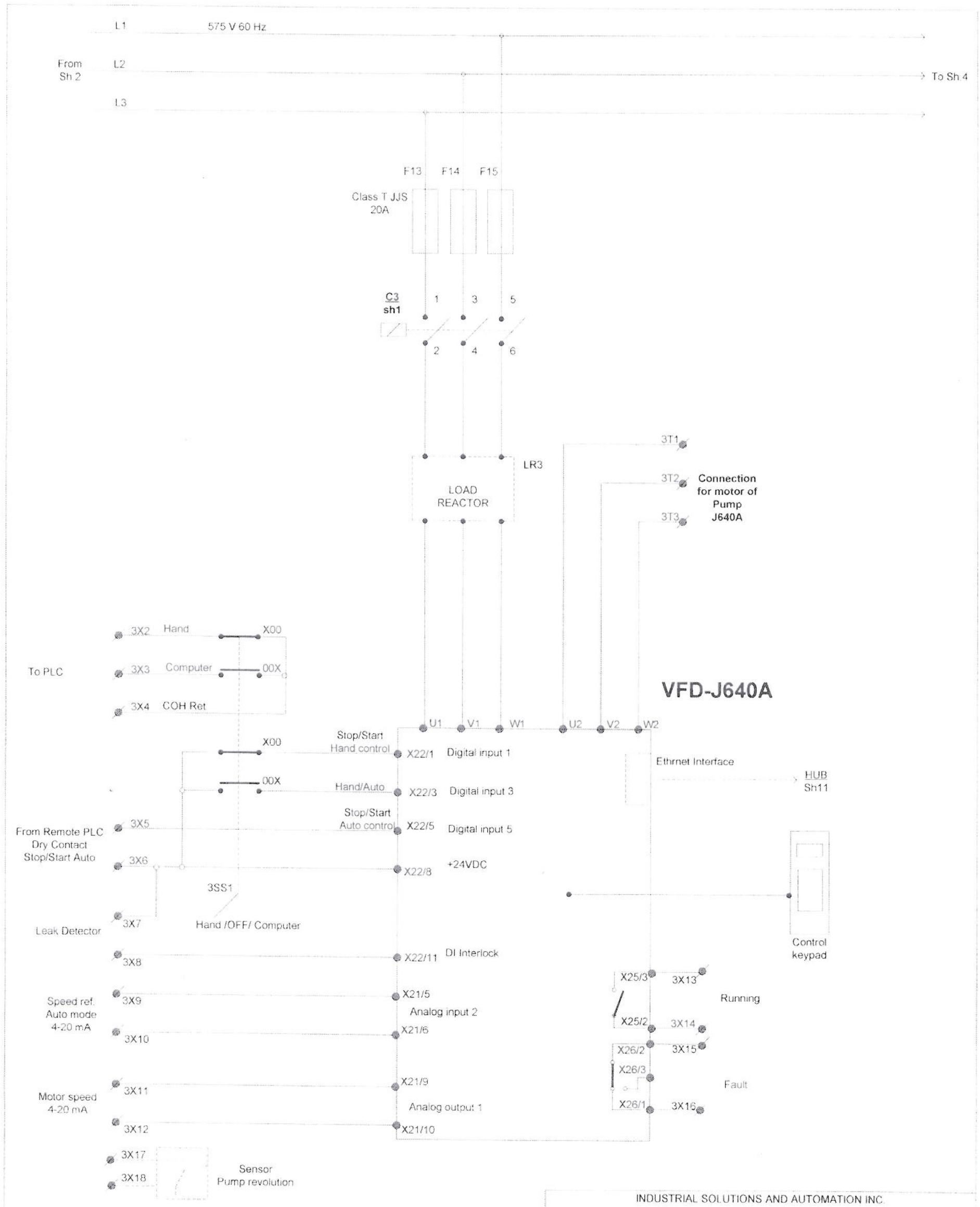

INDUSTRIAL SOLUTIONS AND AUTOMATION INC				
Approvals	Date	Control cabinet 4 X 10 HP Wiring diagram		
Drawn Z. Avdic	Aug 12 2006			
Checked		Dwg No VFD-J640A	Rev A	
Reviewed Y Atheray			Sheet 3 of 11	

Earth Tech (Canada) Inc.

Reviewed for general conformance with design intent. Responsibility for detailed design in the shop drawings rests with the Contractor.

Responsibility for verification and correlation of field dimensions, fabrication process, techniques of construction, installation and coordination of all parts of the work rests with the Contractor.

REVIEWED _____

REVIEWED AS MODIFIED _____

REVISE AND RE-SUBMIT _____

NOT REVIEWED _____

Project No. _____

Date: _____ By: _____

CH2M HILL Canada Limited
CONSULTING ENGINEERS
SUBMITTAL DISPOSITION

	REVIEWED
✓	REVIEWED AS MODIFIED
	REVISE AND RE-SUBMIT
	NOT REVIEWED

BOOK No. 321352 SUBMISSION No. 2

DATE 22/07

DISTRIBUTION

PROJECT 11242 PROJECT 1

COPY FOR

LOCATION: WINNIPEG

SERVICE:

REFER TO CONTRACT SPECIFICATIONS FOR SUBMITTAL REQUIREMENTS
CH2M HILL Canada Limited's review of this submittal does not relieve the manufacturer of complete and exclusive responsibility for the design and manufacture of this product in conformity with specifications of this project.

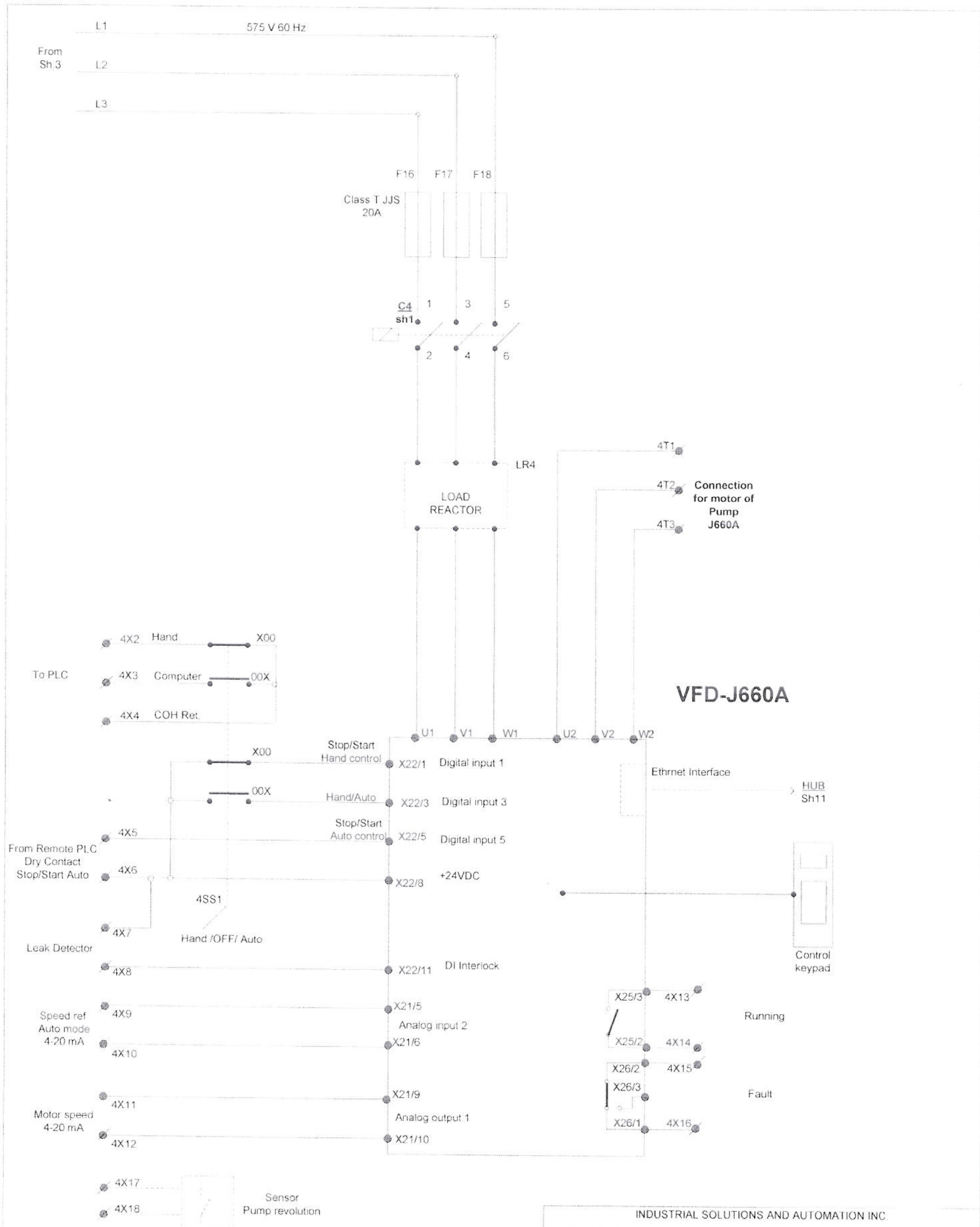

INDUSTRIAL SOLUTIONS AND AUTOMATION INC.			
Approvals	Date	Control cabinet 4 X 10HP Wiring diagram	
Drawn Z.Avdic	Aug 12 2006		
Checked		Dwg. No VFD-J660A	Rev A
Reviewed Y. Atheray			Sheet 4 of 11

Earth Tech (Canada) Inc.

Reviewed for general conformance with design intent. Responsibility for detailed design in the shop drawings rests with the Contractor.

Responsibility for verification and correlation of field dimensions, fabrication process, techniques of construction, installation and coordination of all parts of the work rests with the Contractor.

REVIEWED _____

REVIEWED AS MODIFIED _____

REVISE AND RE-SUBMIT _____

NOT REVIEWED _____

Project No. _____

Date: _____ By: _____

CH2M HILL Canada Limited

CONSULTING ENGINEERS

SUBMITTAL DISPOSITION

- [ ] REVIEWED
- [x] REVIEWED AS MODIFIED
- [ ] REVISE AND RE-SUBMIT
- [ ] NOT REVIEWED

JOB No. 324352 SUBMISSION No. 2

DATE Jan 22/07

DISTRIBUTION

SPEC: 11242 SECTION 1

ITEM: PARTS

LOCATION: WINNIPEG

SERVICE:

REFER TO CONTRACT SPECIFICATIONS FOR SUBMITTAL REQUIREMENTS. CH2M HILL Canada Limited's review of this submittal does not relieve the manufacturer of complete and exclusive responsibility for the design and manufacture of this product in conformity with specifications of this project.

Control Terminals for Pump J600A

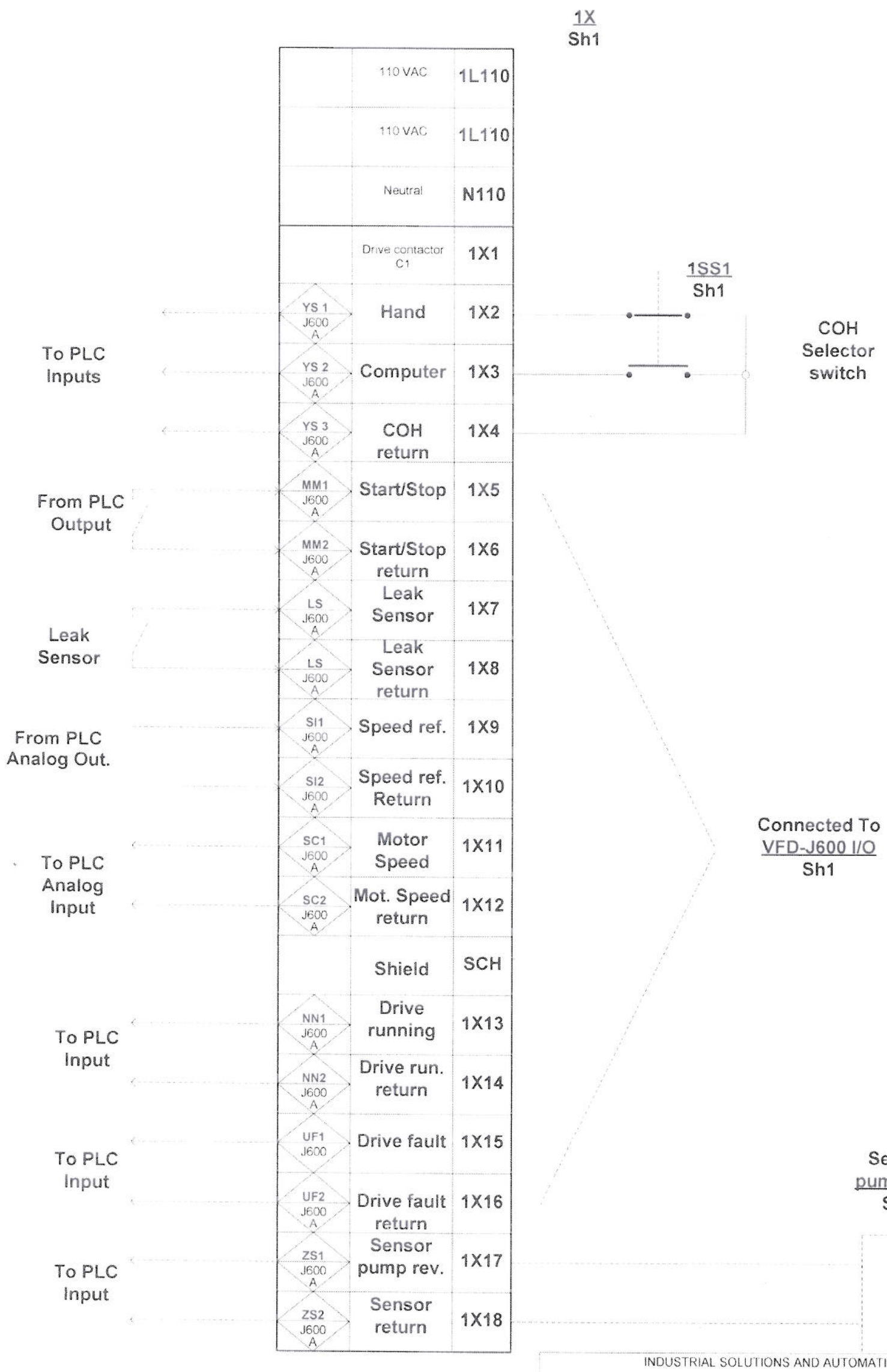

INDUSTRIAL SOLUTIONS AND AUTOMATION INC.			
Approvals	Date	Control cabinet 4 X-10HP **Control Terminals 1X**	
Drawn Z Avdic	Aug.12.2006		
Checked		Dwg. No. VFD-J600A	Rev. A
Reviewed Y Atheray			Sheet 5 of 11

Earth Tech (Canada) Inc.

Reviewed for general conformance with design intent. Responsibility for detailed design in the shop drawings rests with the Contractor.

Responsibility for verification and correlation of field dimensions, fabrication process, techniques of construction, installation and coordination of all parts of the work rests with the Contractor.

REVIEWED _____

REVIEWED AS MODIFIED _____

REVISE AND RE-SUBMIT _____

NOT REVIEWED _____

Project No. _____

Date: _____ By: _____

CH2M HILL Canada Limited
CONSULTING ENGINEERS
SUBMITTAL DISPOSITION

REVIEWED

REVISED AS MODIFIED

REVISE AND RE-SUBMIT

NOT REVIEWED

WOE No. 321352 SUBMISSION No. 2

DISTRIBUTION

SPEC. 11242 ORIG. 1

ITEM: COPIES

LOCATION: WINNIPEG

SERVICE:

REFER TO CONTRACT SPECIFICATIONS FOR SUBMITTAL REQUIREMENTS

CH2M HILL Canada Limited's review of this submittal does not relieve the manufacturer of complete and exclusive responsibility for the design and manufacture of this product in conformity with specifications of this project.

Control Terminals for Pump J620A

2X
Sh2

		Drive contactor C2	2X1
To PLC Inputs	YS 1 J620 A	Hand	2X2
To PLC Inputs	YS 2 J620 A	Computer	2X3
To PLC Inputs	YS 3 J620 A	COH return	2X4
From PLC Output	MM1 J620 A	Start/Stop	2X5
From PLC Output	MM2 J620 A	Start/Stop return	2X6
Leak Sensor		Leak Sensor	2X7
Leak Sensor		Leak Sensor Return	2X8
From PLC Analog Out.	SI1 J620 A	Speed ref.	2X9
From PLC Analog Out.	SI2 J620 A	Speed ref. Return	2X10
To PLC Analog Input	SC1 J620 A	Motor Speed	2X11
To PLC Analog Input	SC2 J620 A	Mot. Speed return	2X12
		Shield	SCH
To PLC Input	NN1 J620	Drive running	2X13
To PLC Input	NN2 J620 A	Drive run. return	2X14
To PLC Input	UF1 J620 A	Drive fault	2X15
To PLC Input	UF2 J620 A	Drive fault return	2X16
To PLC Input	ZS1 J640 A	Sensor pump rev.	2X17
To PLC Input	ZS2 J640 A	Sensor return	2X18

2SS1
Sh2

COH Selector switch

Connected To
VFD-J620 I/O
Sh2

Sensor
pump rev.
Sh2

INDUSTRIAL SOLUTIONS AND AUTOMATION INC

Approvals	Date	Control cabinet 4 X 10HP **Control Terminals 2X**	
Drawn Z. Avdic	Aug.12.2006		
Checked		Dwg. No. VFD-J620A	Rev A
Reviewed Y. Atheray			Sheet 6 of 11

Earth Tech (Canada) Inc.

Reviewed for general conformance with design intent. Responsibility for detailed design in the shop drawings rests with the Contractor.

Responsibility for verification and correlation of field dimensions, fabrication process, techniques of construction, installation and coordination of all parts of the work rests with the Contractor.

REVIEWED _____

REVIEWED AS MODIFIED _____

REVISE AND RE-SUBMIT _____

NOT REVIEWED _____

Project No _____

Date: _____ By _____

CH2M HILL Canada Limited
CONSULTING ENGINEERS
SUBMITTAL DISPOSITION

	REVIEWED
✓	REVIEWED AS MODIFIED
	REVISE AND RE-SUBMIT
	NOT REVIEWED

JOB No. 321352 EMISSION No. 2

[illegible] Jan 22/07

DISTRIBUTION

SPEC 11242 OFFICE 1

ITEM CONTR

LOCATION: WINNIPEG

SERVICE:

REFER TO CONTRACT SPECIFICATIONS FOR SUBMITTAL REQUIREMENTS
CH2M HILL Canada Limited's review of this submittal does not relieve the manufacturer of complete and exclusive responsibility for the design and manufacture of this product in conformity with specifications of this project.

Control Terminals for Pump J640A

3X
Sh3

		Drive contactor C3	3X1
To PLC Inputs	YS 1 J640 A	Hand	3X2
To PLC Inputs	YS 2 J640 A	Computer	3X3
	YS 3 J640 A	COH return	3X4
From PLC Output	MM1 J640 A	Start/Stop	3X5
	MM2 J640 A	Start/Stop return	3X6
Leak Sensor	LS J640 A	Leak Sensor	3X7
	LS J640 A	Leak Sensor Return	3X8
From PLC Analog Out.	SI1 J640 A	Speed ref.	3X9
	SI2 J640 A	Speed ref. Return	3X10
To PLC Analog Input	SC1 J640 A	Motor Speed	3X11
	SC2 J640 A	Mot. Speed return	3X12
		Shield	SCH
To PLC Input	NN1 J640 A	Drive running	3X13
	NN2 J640 A	Drive run. return	3X14
To PLC Input	UF1 J640	Drive fault	3X15
	UF2 J640 A	Drive fault return	3X16
To PLC Input	ZS1 J640 A	Sensor pump rev.	3X17
	ZS2 J640 A	Sensor return	3X18

3SS1
Sh3

COH Selector switch

Connected To
VFD-J640 I/O
Sh3

Sensor
pump rev.
Sh3

INDUSTRIAL SOLUTIONS AND AUTOMATION INC			
Approvals	Date	Control cabinet 4 X 10HP **Control Terminals 3X**	
Drawn Z Avdic	Aug 12 2006		
Checked		Dwg. No. VFD-J640A	Rev. A
Reviewed Y Atheray			Sheet 7 of 11

Earth Tech (Canada) Inc.

Reviewed for general conformance with design intent. Responsibility for detailed design in the shop drawings rests with the Contractor.

Responsibility for verification and correlation of field dimensions, fabrication process, techniques of construction, installation and coordination of all parts of the work rests with the Contractor.

REVIEWED: _____

REVIEWED AS MODIFIED: _____

REVISE AND RE-SUBMIT: _____

NOT REVIEWED: _____

Project No. _____

Date: _____ By: _____

CH2M HILL Canada Limited
CONSULTING ENGINEERS
SUBMITTAL DISPOSITION

	REVIEWED
✓	REVIEWED AS NOTED
	REVISE AND RE-SUBMIT
	NOT REVIEWED

JOB No. 321352 SUBMISSION No. 2

DATE Jan 22/07

DISTRIBUTION

OFFICE 1

PROJ. 11242

ITEM

CONTR.

LOCATION: WINNIPEG

SERVICE:

REFER TO CONTRACT SPECIFICATIONS FOR SUBMITTAL REQUIREMENTS. CH2M HILL Canada Limited's review of this submittal does not relieve the manufacturer of complete and exclusive responsibility for the design and manufacture of this product in conformity with specifications of this project.

Control Terminals for Pump J660A

4X
Sh4

		Drive contactor C4	4X1
To PLC Inputs	YS 1 J660 A	Hand	4X2
	YS 2 J660 A	Computer	4X3
	YS 3 J660 A	COH return	4X4
From PLC Output	MM1 J660 A	Start/Stop	4X5
	MM2 J660 A	Start/Stop return	4X6
Leak Sensor	LS J660 A	Leak Sensor	4X7
	LS J660 A	Leak sensor Return	4X8
From PLC Analog Out.	SI1 J660 A	Speed ref.	4X9
	SI2 J660 A	Speed ref. Return	4X10
To PLC Analog Input	SC1 J660 A	Motor Speed	4X11
	SC2 J660 A	Mot. Speed return	4X12
		Shield	SCH
To PLC Input	NN1 J660 A	Drive running	4X13
	NN2 J660 A	Drive run. return	4X14
To PLC Input	UF1 J660	Drive fault	4X15
	UF2 J660	Drive fault return	4X16
To PLC Input	ZS1 J660 A	Sensor pump rev.	4X17
	ZS2 J660 A	Sensor return	4X18

4SS1
Sh4

COH Selector switch

Connected To
VFD-J660 I/O
Sh4

Sensor
pump rev.
Sh4

INDUSTRIAL SOLUTIONS AND AUTOMATION INC			
Approvals	Date	Control cabinet 4 X 10HP **Control Terminals 4X**	
Drawn Z.Avdic	Aug.12.2006.		
Checked		Dwg. No. VFD-J660A	Rev. A
Approved Y.Atheray			Sheet 8 of 11

Earth Tech (Canada) Inc.

Reviewed for general conformance with design intent. Responsibility for detailed design in the shop drawings rests with the Contractor.

Responsibility for verification and correlation of field dimensions, fabrication process, techniques of construction, installation and coordination of all parts of the work rests with the Contractor.

REVIEWED _____

REVIEWED AS MODIFIED _____

REVISE AND RE-SUBMIT _____

NOT REVIEWED _____

Project No. _____

Date: _____ By: _____

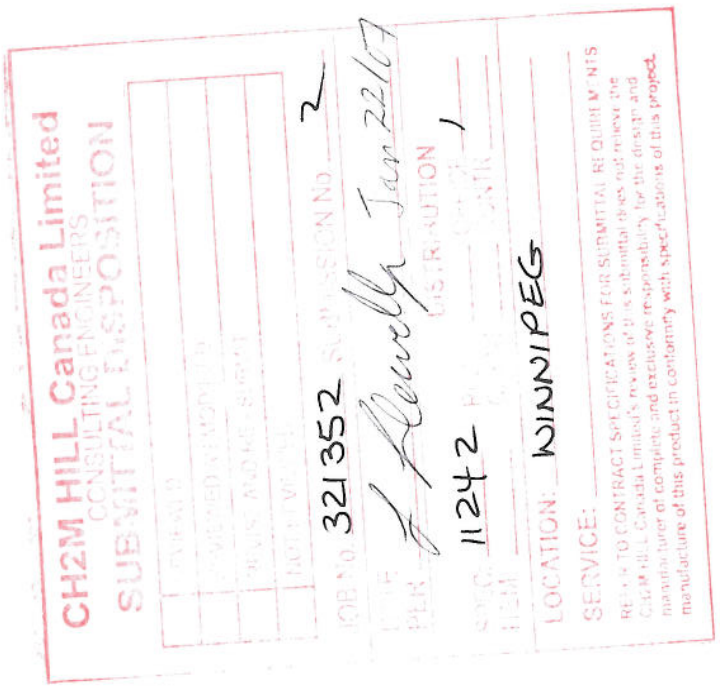

Motor Terminals
J600A, J620A, J640A, J660A

1T, 2T, 3T, 4T

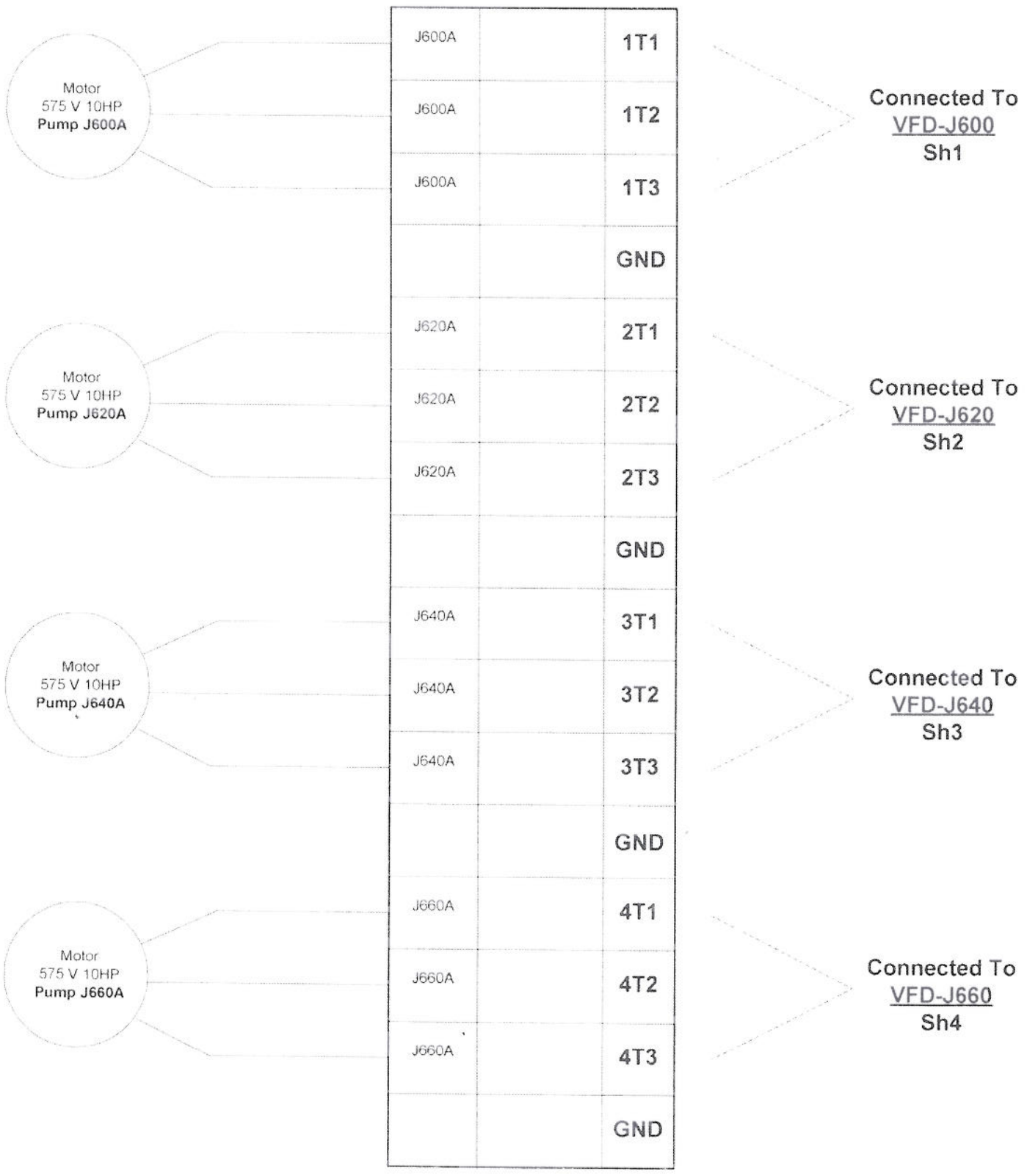

INDUSTRIAL SOLUTIONS AND AUTOMATION INC				
Approvals	Date	Control cabinet 4 X 10HP **Motor Terminals**		
Drawn Z Avdic	Aug.12.2006			
Checked		Dwg. No. VFD-motors	Rev	A
Approved Y Atheray			Sheet	9 of 11

49-11242-15-R1
Winnipeg WTP

Earth Tech (Canada) Inc.

Reviewed for general conformance with design intent. Responsibility for detailed design in the shop drawings rests with the Contractor.

Responsibility for verification and correlation of field dimensions, fabrication process, techniques of construction, installation and coordination of all parts of the work rests with the Contractor.

REVIEWED _____

REVIEWED AS MODIFIED _____

REVISE AND RE-SUBMIT _____

NOT REVIEWED _____

Project No. _____

Date: _____ By: _____

CH2M HILL Canada Limited
CONSULTING ENGINEERS
SUBMITTAL RESPONSE

SUBMISSION No. 2

321352

Sec 22/07

DISTRIBUTION

11242

LOCATION: WINNIPEG

SEE NOTICE:

REFER TO CONTRACT SPECIFICATIONS FOR SUBMITTAL REQUIREMENTS

CH2M HILL Canada Limited's review of this submittal does not relieve the manufacturer of complete and exclusive responsibility for the design and manufacture of this product in conformity with specifications of this project.

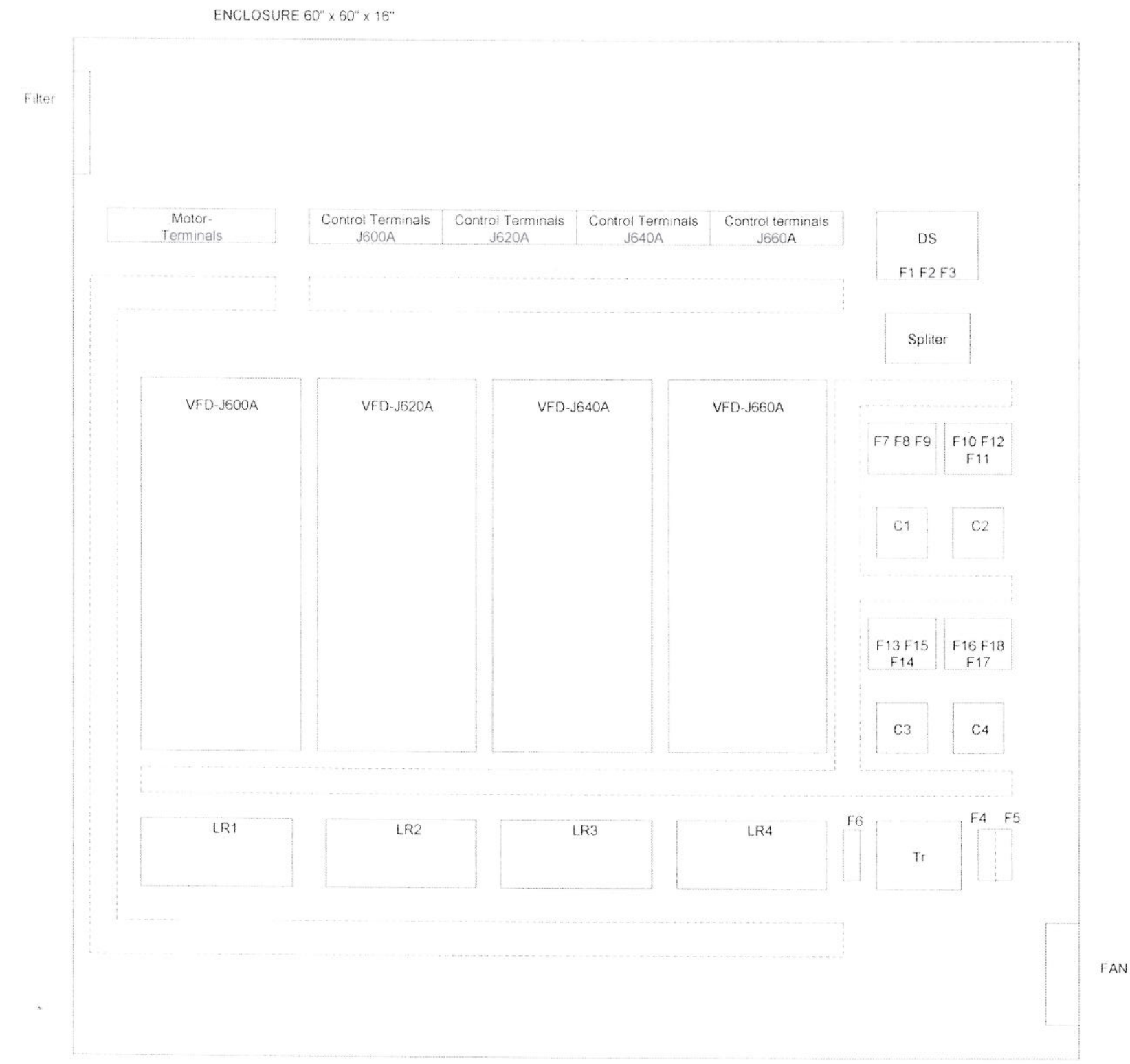

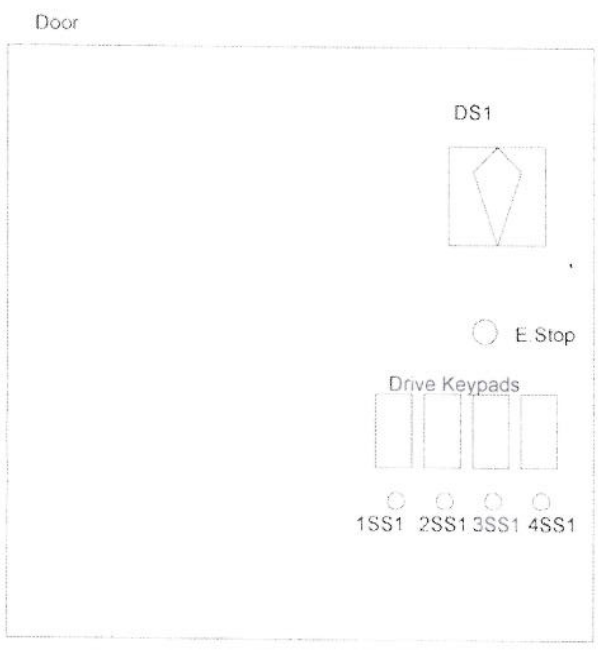

INDUSTRIAL SOLUTIONS AND AUTOMATION INC.			
Approvals	Date	Control cabinet 4 X 10HP **Equipment layout**	
Drawn Z.Avdic	Aug.12.2006.		
Checked		Dwg. No. El. Cabinet	Rev A
Reviewed Y.Atheray			Sheet 10 of 11

49-11242-15-R1
Winnipeg WTP

Earth Tech (Canada) Inc.

Reviewed for general conformance with design intent. Responsibility for detailed design in the shop drawings rests with the Contractor.

Responsibility for verification and correlation of field dimensions, fabrication process, techniques of construction, installation and coordination of all parts of the work rests with the Contractor.

REVIEWED ______

REVIEWED AS MODIFIED ______

REVISE AND RE-SUBMIT ______

NOT REVIEWED ______

Project No. ______

Date: ______ By: ______

CH2M HILL Canada Limited
CONSULTING ENGINEERS
SUBMITTAL DISPOSITION

✓

321352

2

Jan 22/07

1

11242

LOCATION: WINNIPEG

SERVICE: ______

REFER TO CONTRACT SPECIFICATIONS FOR SUBMITTAL REQUIREMENTS. CH2M HILL Canada Limited's review of this submittal does not relieve the manufacturer of complete and exclusive responsibility for the design and manufacture of this product in conformity with specifications of this project.

OPTIONAL ETHERNET CONNECTIONS

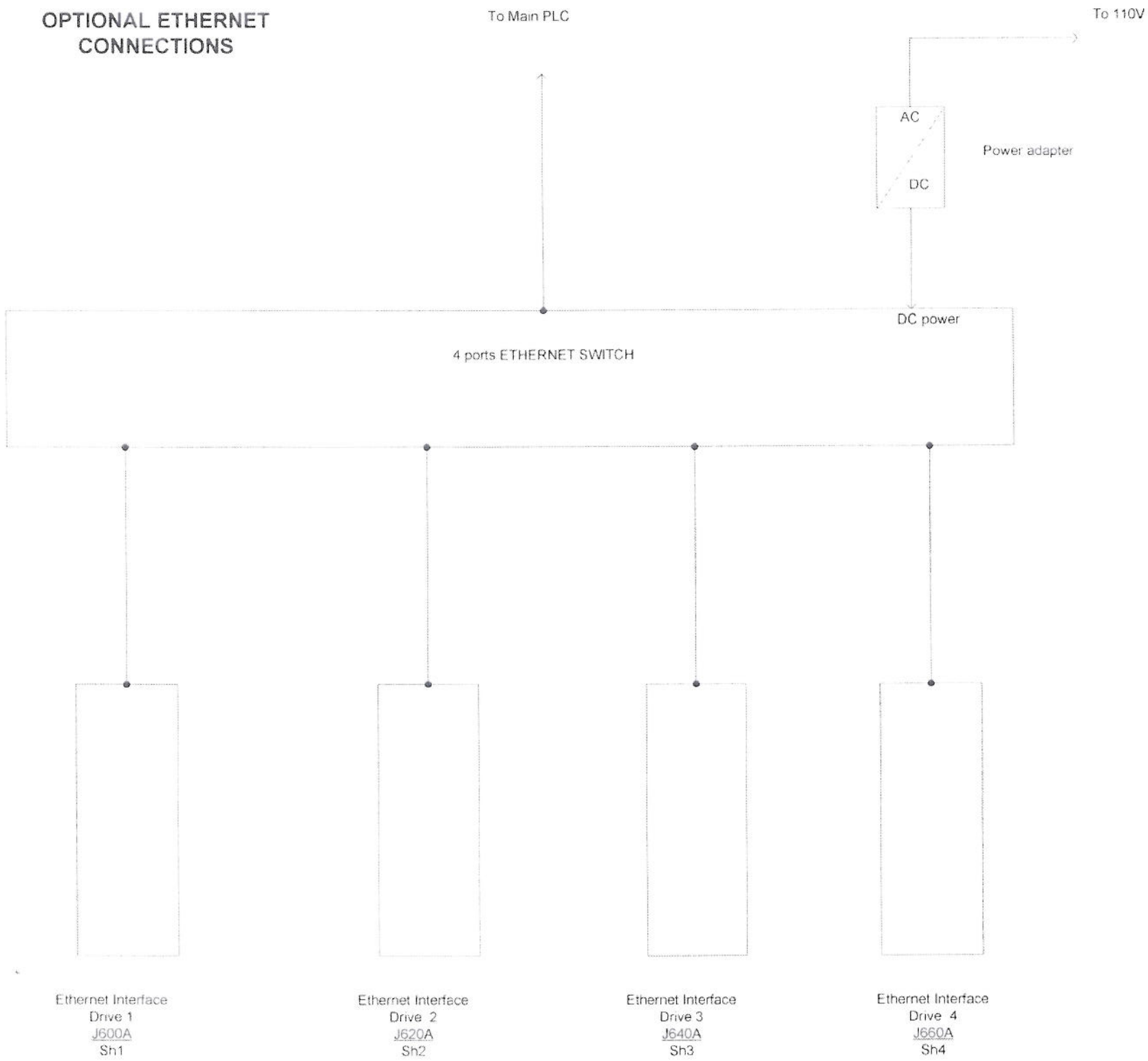

INDUSTRIAL SOLUTIONS AND AUTOMATION INC			
Approvals	Date	Control cabinet 4 X 10HP OPTIONAL Ethernet connection	
Drawn Z.Avdic	Aug 12 2006		
Checked		Dwg. No. El. Cabinet	Rev. A
Reviewed Y.Atheray			Sheet 11 of 11

Earth Tech (Canada) Inc.

Reviewed for general conformance with design intent. Responsibility for detailed design in the shop drawings rests with the Contractor.

Responsibility for verification and correlation of field dimensions, fabrication process, techniques of construction, installation and coordination of all parts of the work rests with the Contractor.

REVIEWED _____

REVIEWED AS MODIFIED _____

REVISE AND RE-SUBMIT _____

NOT REVIEWED _____

Project No. _____

Date: _____ By: _____

CH2M HILL Canada Limited

CONSULTING ENGINEERS

SUBMITTAL DISPOSITION

	REVIEWED
✓	REVISE AND RESUBMIT
	REVISE AND RESUBMIT - Submit
	NOT REVIEWED

JOB No 321352 SUBMISSION No 2

DATE Jan 22/07

PER

SPEC 11242 ITEM 1

LOCATION: WINNIPEG

SERVICE:

REFER TO CONTRACT SPECIFICATIONS FOR SUBMITTAL REQUIREMENTS

CH2M HILL Canada Limited's review of this submittal does not relieve the manufacturer of complete and exclusive responsibility for the design and manufacture of this product in conformity with specifications of this project.

Industrial Solutions & Automation Inc.

6780 Davand Dr. Unit:26 , Mississauga,On.,L5T 2G4
Tel: 905 795 1358 – Fax: 905 795 1657
www.industrialsolutions.ca

August 23, 2006

Attention: Gabriel

METCON SALES & ENGINEERING LTD.

Reference P.O # 108229

To Whom It May Concern: The ABB Drive, CAT # ACS800-U1-0016-7. Is compatible with the ABB 10HP, 575-V, 3 Phase, 60HZ. Inverter Duty Motor "(1800RPM215TC)

Junior B. Gillard

Manager
Industrial Solutions & Automation Inc.

Tel: (905) 795 1358
Fax: (905) 795 1657

This fax was received by GFI FAXmaker fax server. For more information, visit: http://www.gfi.com

Industrial Solutions & Automation Inc.

Tel: 905 795 1358 - Fax: 905 795 1657
www.industrialsolutions.ca

BILL OF MATERIALS

ITEM	QTY	DESCRIPTION
1	1	HAMMOND ENCLOSURE 60X60X16 1422N4D16F
2	4	ABB VFD ACS800-U1-0016-7 10HP 600V 3PH DRIVE
3	1	ABB FUSEABLE MAIN DISCONNECT OS60J12P
4	3	EDISON FUSES CLASS J T/D JDL50
5	1	TRANSFORMER 250VA 600/120 DO25OQH
6	1	ITC 2 POLE FUSE HOLDER 400.102
7	1	ITC 1 POLE FUSE HOLDER 400.101
8	2	EDISON CLASS CC FUSES EDCC.5
9	1	EDISON CLASS CC FUSES EDCC2.5
10	12	EDISON CLASS T FUSE JJS-20
11	4	EDISON CLASS T FUSE BLOCK T60030-3CR
12	4	ABB CONTACTORS A12-30-10-84
13	4	A/B 30MM SELECTOR SWITCHES 3POS.C/W CONTACT BLOCKS 800T-J2A
14	4	A/B RED PILOT LIGHTS 800T-QH10R
15	4	A/B GREEN PILOT LIGHTS 800T-HQ10G
16	1	A/B E-STOP 800T-FXT6D4

Earth Tech (Canada) Inc.

Reviewed for general conformance with design intent. Responsibility for detailed design in the shop drawings rests with the Contractor.

Responsibility for verification and correlation of field dimensions, fabrication process, techniques of construction, installation and coordination of all parts of the work rests with the Contractor.

REVIEWED ✓

REVIEWED AS MODIFIED

REVISE AND RE-SUBMIT

NOT REVIEWED

Project No. C28/16/79538

Date: 14/9/06 By: M. Yaulz

BROCHURES & CATALOGUE SHEETS

Drive^{IT} Low Voltage AC Drive

ACS800 Catalog
Related tools and accessories

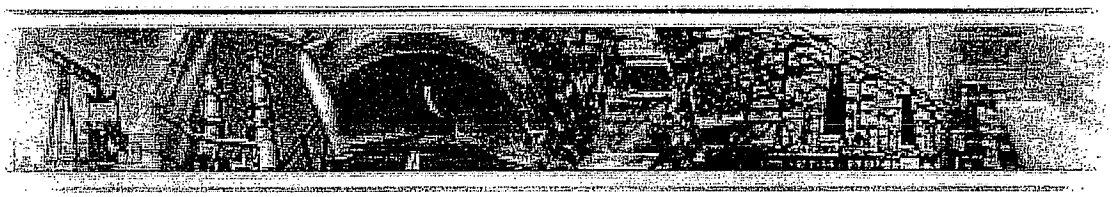

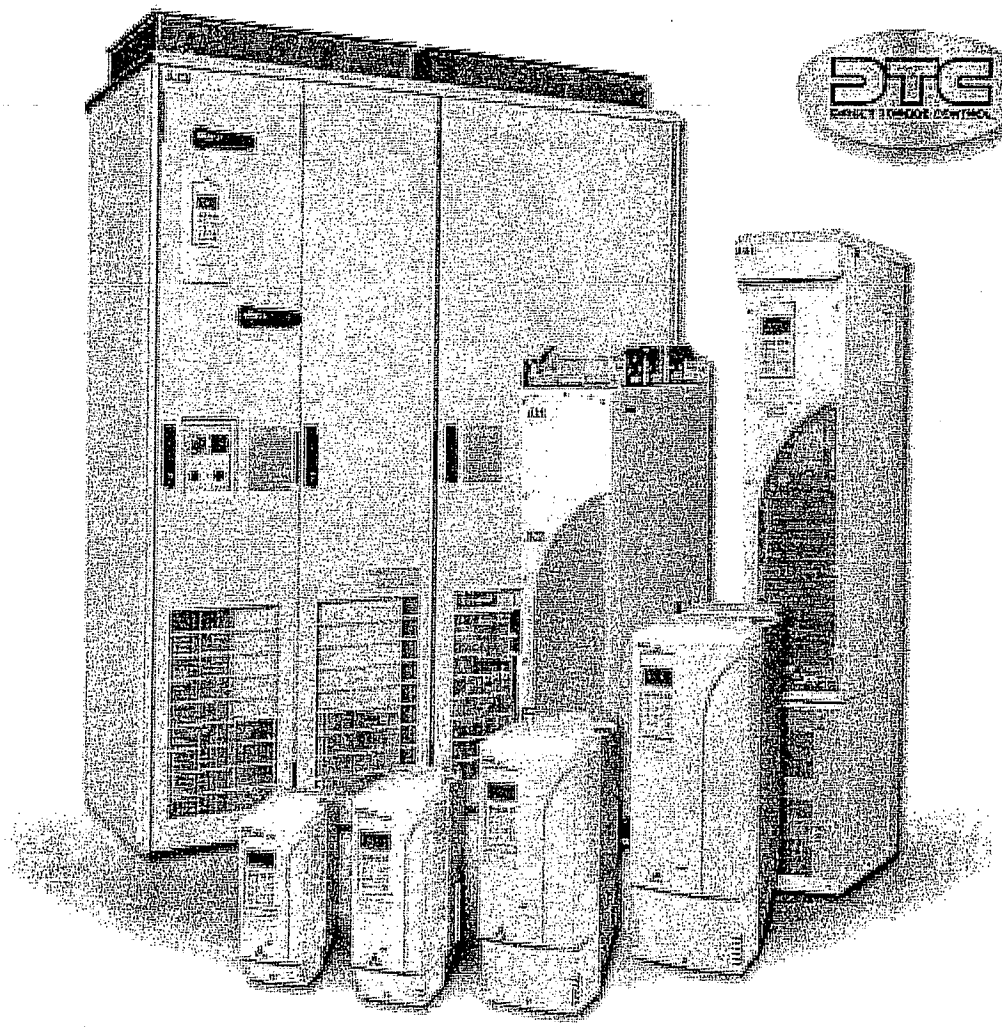

ABB

ABB industrial drives

ACS800, single drives
ACS800, regenerative AC drives
ACS800, ultra low harmonic drives

Technical catalog

0.75 to 75 HP @ 240 Vac
2 to 2250 HP @ 480 Vac
5 to 3000 HP @ 600 Vac

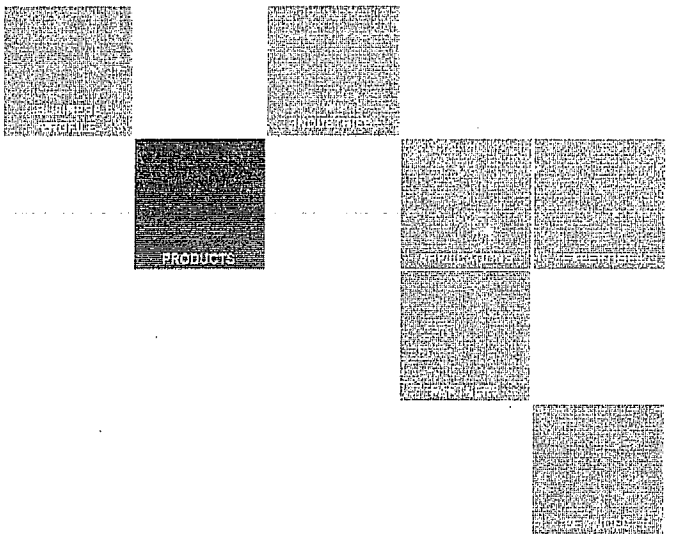

1025 Exchange St. Boise, ID 83716 USA. Phone 800.894.0412 Fax 208.368.0415
Visit our website at www.clrwtr.com email us at info@clrwtr.com

ABB

ABB industrial drives

ACS800 - U1 - XXXX - X + XXXX

U1
PC
U2
U7/07
U11/17
U31/37

ABB industrial drives

ABB industrial drives are designed for industrial applications, and especially for applications in process industries such as the converting, pulp & paper, metals, mining, cement, power, chemical, and oil & gas industries. ABB industrial drives are highly flexible AC drives that can be configured to meet the precise needs of industrial applications, and therefore order-based configuration is an integral part of the offering. These drives cover a wide range of powers and voltages, including industrial voltages up to 690 V. ABB industrial drives come with a wide range of built in options. A key feature of these drives is programmability, which makes adaptation to different applications easy.

Industrial design

ABB industrial drives are designed with current ratings to be used in industrial environments for applications requiring high overloadability. The heart of the drive is DTC, Direct Torque Control, that provides high performance and significant benefits: e.g. accurate static and dynamic speed and torque control, high starting torque and use of long motor cables. Built in drive options make the installation work fast and easy. The robust enclosures and cabinets, with a wide range of enclosure classes, as well as power terminals, are designed for harsh environments.

One of the most significant design criteria of ABB industrial drives has been long lifetime. Wearing parts such as fans and capacitors have been selected accordingly. This means - together with extensive protection features - excellent reliability in demanding industrial applications.

DTC Motor Control

Direct Torque Control (DTC) developed by ABB has improved motor control accuracy without the requirement of speed feedback device. Accurate speed and torque control of the manufacturing process optimizes the quality of the end product. Many applications no longer require additional speed feedback when the ACS800 with DTC is used.

Industrial^{IT} enabled

ABB industrial drives are Industrial^{IT} enabled. This guarantees the user that ABB industrial drives can be easily integrated into ABB Industrial IT systems.

Single drives

The single drive configuration contains a rectifier, DC link and an inverter in one single AC drive unit.

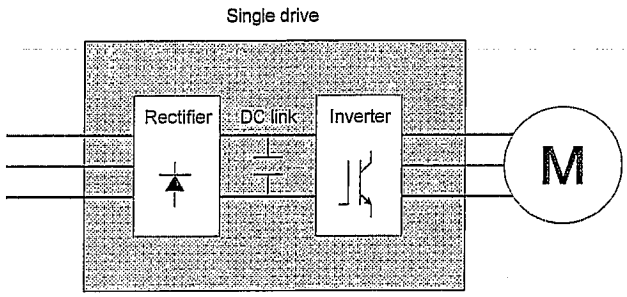

The single drives are complete AC drives that can be installed without any additional cabinet or enclosure. The single drives are available as wall-mounted, free-standing and cabinet-built constructions. The standard protection class of the single drives is UL Type 1 and higher protection classes are available as an option.

Type Code

This is the unique reference number that clearly identifies your drive by construction, power rating voltage and selected options. By type code you can specify your drives from the wide range of available options, customer specific ones are added to the type code using the corresponding + code.

Single drive main features

Features	Benefits	Notes
Compact and complete		
Compact size, everything integrated	Less space and installation work required.	No need to install extra components such as input chokes or EMC filter.
Built in harmonic filter in all ACS800 drives	Low harmonics, meaning less interference and less heating in cables and transformers. Filter also protects the drive from line side transients.	For the lowest harmonic level, ACS800-37 offers almost a harmonic free solution.
Wide range of options available	Standard solutions available from ABB to meet most customers application needs.	Custom made solutions are available in the ACS800-U7/07/17/37
Versatile braking options	Optimal braking options are always available. No need for an external braking chopper thus reducing size and installation cost.	Brake chopper built inside all frame sizes (standard/optional). Regenerative braking with ACS800-U11 and ACS800-17.
User interface		
User friendly customer interface	Easy and fast commissioning and operation.	Clear, alphanumeric display with start-up assistant that guides through the start-up procedure. Easy to use PC tools available for commissioning, maintenance, monitoring and programming.
Versatile connections and communications	Standard I/O covers most requirements.	Extensive standard and optional I/O.
Extensive programmability	Connectable to commonly used fieldbuses. Flexibility. Possible to replace relays or even a PLC in some applications.	Two levels of programmability: 1. Parameter programming (standard) 2. Adaptive programming (free block programming) - standard feature - more blocks available as options - all I/Os are programmable
Industrial design		
Wide power and voltage range	One product series can be used to meet all application needs, meaning less training and spare parts and standardized interface to drives.	0.75 to 3000 Hp 208 to 690 Vac
Wide range of robust enclosures available	Industrial suitable solutions available for different environments.	UL Type 1, UL Type 1 filtered, UL Type 12
Robust main circuit design	Suitable for heavy industrial use. Reliable. Long motor cables can be used without extra output filters.	Components dimensioned for heavy duty and long lifetime. Advanced thermal model allows high overloadability.

1025 Exchange St. Boise, ID 83716 USA. Phone 800.894.0412 Fax 208.368.0415
Visit our website at www.clrwtr.com email us at info@clrwtr.com

Single drive main features

Features	Benefits	Notes
Industrial design		
Extensive protection features	Enhanced reliability, fewer process interruptions. Possibility to also protect motors and process.	Several adjustable limits to protect other equipment included.
Galvanic isolation of I/O	Safe and reliable operation without separate isolators and relays.	Isolated input signals and relay outputs as standard.
All terminals designed for industrial use	Sufficient size even for large aluminum cables. No need for special tools in I/O cabling.	
Worldwide approvals: CE, UL, cUL, CSA, C-Tick, GOST R	Products that can be used everywhere in the world.	
Right performance for every application		
DTC, accurate dynamic and static speed and torque control	Excellent process control even without speed feedback device - improved product quality, productivity, reliability and lower investment cost.	
DTC - allows high overloadability and gives high starting torque	Reliable, smooth start without overdimensioning the drive.	
DTC, fast control	No unnecessary trips or process interruptions.	Fast reaction to load or voltage variations prevents tripping. Rides through power interruptions by using kinetic energy of the load.
DTC, flux optimization and sophisticated motor model	Excellent motor and drive efficiency - cost savings for non-dynamic applications like pumps or fans.	Optimal flux in the motor reduces losses on applications where Dynamic Response requirements are minimal.
DTC, mechanics friendly	Less stress for mechanics improves reliability.	No shock torques. No torque ripple - minimized risk for torsional vibration. Active oscillation damping.
DTC, line supply control	High performance and robust control in active supply unit with programmable power factor.	Applies for ACS800-U11, ACS800-17, ACS800-U31, and ACS800-37
Made by ABB		
Global market leader in AC drives. **Long experience.**	Well proven, safe and reliable solutions. Application know-how.	
World wide service and support network	Professional support available around the world.	

1025 Exchange St. Boise, ID 83716 USA. Phone 800.894.0412 Fax 208.368.0415
Visit our website at www.clrwtr.com email us at info@clrwtr.com

Technical specification

Mains connection

Voltage and power range	3-phase, U_{2IN} = 208 to 240 V, ± 10%, except -U2, -U7, -07, -17, -37 ~~3-phase, U_{5IN} = 380 to 500 V, ± 10%~~ 3-phase, U_{7IN} = 525 to 690 V, ± 10% (600 V UL, CSA)
Frequency	48 to 63 Hz
Nominal Impedance	3% Nominal Impedance R2-R3, DC Bus Choke R4 and greater, AC Reactor
Power factor	$\cos\varphi_1$ = 0.98 (fundamental) $\cos\varphi$ = 0.93...0.95 (total)
Power factor (ACS800-U11/17 & U31/37)	$\cos\varphi_1$ = 1 (fundamental) $\cos\varphi$ = 0.99 (total)
Efficiency (at nominal power)	
ACS800-U1/PC/U2/U7/07	98%
ACS800-U11/17/U31/37	97%

Motor connection

Voltage for > 500 V units	3-phase output voltage 0...U_{2IN}/U_{5IN}/U_{7IN} please see "Filter selection table for ACS800" under the du/dt filters on page 33
Frequency	0...±300 Hz (0...±120 Hz for -U7/-07/-17/-37 with du/dt filters)
Field weakening point	8...300 Hz
Motor control	ABB's exclusive Direct Torque Control (DTC)
Torque control:	Torque step rise time:
Open loop	<5 ms with nominal torque
Closed loop	<5 ms with nominal torque
	Non-linearity:
Open loop	±4% with nominal torque
Closed loop	±1% with nominal torque
Speed control:	Static accuracy:
Open loop	10% of motor slip
Closed loop	0.01% of nominal speed
	Dynamic accuracy:
Open loop	0.3...0.4% sec. with 100% torque step
Closed loop	0.1...0.2% sec. with 100% torque step

Environmental

Ambient temperature	
Transport	-40...+70°C
Storage	-40...+70°C
Operation	-15...+50°C, no frost allowed 40...50°C at reduced output current (1% / 1°C)
Cooling method:	Dry clean air
Altitude	
0...1000 m	without derating
1000...4000 m	with derating ~ (1% / 100 m) (690 V units 1000...2000 m with derating)
Relative humidity	5 to 95%, no condensation allowed
Protection class	
UL Type 1	standard for -U1, -U11, -U2, -U7/07, -17, -37
UL Type 1 filtered	option for -U7/07, -17, -37
UL Type 12	option for -U1,-U7/07, -17, -37
Paint color	-PC, U7/07, -17, -37: RAL 7035 -U1, -U11, -U2, -31: NCS 1502-Y (RAL 90021, PMS 420 C)
Contamination levels	No conductive dust allowed
Storage	IEC60721-3-1, Class 1C2 (chemical gases), Class 1S2 (solid particles)
Transportation	IEC60721-3-2, Class 2C2 (chemical gases), Class 2S2 (solid particles)
Operation	IEC60721-3-3, Class 3C1/3C2* (chemical gases), Class 3S2 (solid particles)

C = chemically active substances
S = mechanically active substances
* coated circuit boards

Product compliance

CE
Low Voltage Directive 73/23/EEC with amendment 93/68/EEC
Machinery Directive 98/37/EC
EMC Directive 89/336/EEC with amendment 93/68/EEC
Quality assurance system ISO 9001 and
Environmental system ISO 14001
UL & cUL (508A or 508C) and CSA C22.2 NO.14-95, C-Tick, GOST R

EMC (according to EN 61800-3)

2nd environment, unrestricted distribution
- standard in -07 (frame size nxR8i), -17 and -37 (frame sizes R7i-nxR8i), option in the others
1st environment, restricted distribution as options up to 1000 A input current

NOTE: Available options are shown in the Summary of features and

ACS800 Product Description

Wall-mounted drive, ACS800-U1

The wall-mounted drive, ACS800-U1 offers all that you need up to 150 Hp. All important features and options are built inside the drive: line choke, EMC filter, brake chopper etc. The user gets everything in a single and complete UL Type 1 or UL Type 12 package. Still the drive is also extremely small. A wide range of software alternatives makes this drive suitable for almost any application.

Cabinet-built drive, ACS800-PC

The cabinet built ACS800-PC is a US only construction using the industrial Rittal™ standard enclosure and is available from 125 to 600Hp at 480Vac. The ACS800-PC is a standardized package product that includes an input disconnect switch (circuit breaker) and class T input fuses. The drive is available in UL Type 1 enclosure up to 400Hp and optional in UL Type 12 enclosure up to 600Hp. The ACS800-PC offers a variety of options for factory installation including; I/O expansion, line contactor with E-Stop, and aux motor starter for motor cooling fan.

Free-standing drive, ACS800-U2

The free-standing drive, ACS800-U2, with power ratings from 125 to 600Hp, is available in an extremely compact UL Type 1 enclosure and uniquely offers two mounting directions. It also offers a wide range of built in options including, EMC filters, brake choppers, line apparatus such as fuse disconnect switch and contactor.

Cabinet-built drive, ACS800-U7/07

The cabinet-built drive, ACS800-U7/07 offers standardized configurations that can be adapted to any application. It covers a wide power range up to 3000 Hp and is very compact, the largest drive is only 10.5 feet wide. It is available with UL Type 1, UL Type 1 filtered and UL Type 12 protection classes. A wide range of built in options is available and application engineering services can be offered when customization is needed.

Wall-mounted regenerative drive, ACS800-U11

The wall-mounted drive, ACS800-U11 is equipped with an active supply unit. It offers a full performance regenerative drive in a single compact package. All important features and options including an LCL line filter and EMC filter are built inside the drive. The power ratings start from 7.5 Hp and go up to 125 Hp. It is available in UL Type 1 protection class enclosure.

Cabinet-built regenerative drive, ACS800-17

The cabinet-built drive, ACS800-17 is equipped with an active supply unit. It is intended to drive applications where regenerative operation is required. It covers a wide power range and has an extensive range of standardized configurations that can be adapted to any application. It is available with UL Type 1, UL Type 1 filtered and UL Type 12 protection classes.

Wall-mounted ultra low harmonic drive, ACS800-U31

The wall-mounted drive, ACS800-U31, is equipped with an active supply unit and built in LCL filter providing a unique ultra-low harmonic solution fully incorporated inside the drive. This design provides unmatched harmonic mitigation fulfilling IEEE519-1992 requirements at the drive input terminals without any additional external hardware. The active supply unit also allows the drive to operate at unity power factor and the harmonic mitigation is not effected by input line imbalances up to and exceeding 3% voltage imbalance. The ACS800-31 is available from 7.5 to 125 Hp in a UL Type 1 enclosure.

Cabinet-built ultra low harmonic drive, ACS800-37

The cabinet-built drive, ACS800-37 provides a unique ultra-low harmonic solution that is incorporated in the drive. It has exceptionally low line harmonic content and it fulfills IEEE519-1992 harmonic requirements without external filtering devices or multi-pulse transformer arrangements. Like other cabinet-built stand- alone drives, it has a wide range of standardized configurations and is available with UL Type 1, UL Type 1 filtered and UL Type 12 protection classes.

Ratings and dimensions

ACS800-U1

ACS800 - U1 - XXXX - 2 5 7 + XXXX

Type code	Frame size	Input A	I_{max} A	Normal Duty I_{2N} A	Normal Duty P_N Hp	Heavy-duty use I_{2HD} A	Heavy-duty use P_{HD} Hp	Noise Level dBA	Air flow ft³/min	Heat dissipation BTU/hr
3-phase supply voltage 208, 220, 230, 240. The power ratings are valid at nominal voltage, 240Vac (50 & 60Hz)										
ACS800-U1-0002-2	R2	5.2	8.2	6.6	1.5	4.6	1	62	21	350
ACS800-U1-0003-2	R2	6.7	10.8	8.1	2	6.6	1.5	62	21	350
ACS800-U1-0004-2	R2	9.3	13.8	11	3	7.5	2	62	21	410
ACS800-U1-0006-2	R3	18	24	21	5	13	3	62	41	550
ACS800-U1-0009-2	R3	24	32	27	7.5	17	5	62	41	680
ACS800-U1-0011-2	R3	31	46	34	10	25	7.5	62	41	850
ACS800-U1-0016-2	R4	40	62	42	15	31	10	62	61	1150
ACS800-U1-0020-2	R4	51	72	54	20(1)	42	15(2)	62	61	1490
ACS800-U1-0025-2	R5	67	86	69	25	54	20(2)	65	99	1790
ACS800-U1-0030-2	R5	81	112	80	30	68	25(2)	65	99	2090
ACS800-U1-0040-2	R5	102	138	104	40(1)	80	30(2)	65	99	2770
ACS800-U1-0050-2	R6	138	164	132	50	104	40	65	238	3370
ACS800-U1-0060-2	R6	163	202	157	60	130	50(2)	65	238	4050
ACS800-U1-0070-2	R6	202	282	192	75	154	60(2)	65	238	4910
3-phase supply voltage 380, 400, 415, 460, 480, 500. The power ratings are valid at nominal voltage, 480Vac 60Hz										
ACS800-U1-0004-5	R2	4.7	6.5	4.9	3	3.4	2	62	21	410
ACS800-U1-0005-5	R2	5.9	8.2	6.2	3	4.2	2	62	21	480
ACS800-U1-0006-5	R2	7.7	10.8	8.1	5	5.6	3	62	21	550
ACS800-U1-0009-5	R2	10	13.8	11	7.5	8.1	5	62	21	690
ACS800-U1-0011-5	R2	12.6	17.6	14	10	11	7.5	62	21	860
ACS800-U1-0016-5	R3	19	24	21	15	15	10	62	41	1150
ACS800-U1-0020-5	R3	25	32	27	20	21	15	62	41	1490
ACS800-U1-0025-5	R3	31	46	34	25	27	20	62	41	1790
ACS800-U1-0030-5	R4	41	62	42	30	34	25	62	61	2090
ACS800-U1-0040-5	R4	50	72	52	40	37	30(3)	62	61	2770
ACS800-U1-0050-5	R5	64	86	65	50	52	40	65	99	3370
ACS800-U1-0060-5	R5	78	112	79	60	65	50	65	99	4050
ACS800-U1-0070-5	R5	95	138	96	75	77	60	65	99	4910
ACS800-U1-0100-5	R6	121	164	124	100	96	75	65	238	6610
ACS800-U1-0120-5	R6	155	202	157	125	124	100	65	238	7890
ACS800-U1-0140-5	R6	180	282	180	150	156	125	65	238	9600
3-phase supply voltage 525, 550, 575, 600, 690. The power ratings are valid at nominal voltage, 600Vac 60Hz										
ACS800-U1-0011-7	R4	12	14	11.5	10	8.5	5	62	61	1050
ACS800-U1-0016-7	R4	15	19	15	10	11	10	62	61	1200
ACS800-U1-0020-7	R4	21	26	20	15	15	10	62	61	1550
ACS800-U1-0025-7	R4	24	38	23	20	19	15	62	61	1850
ACS800-U1-0030-7	R4	33	44	30	25	22	20	62	61	2100
ACS800-U1-0040-7	R4	35	54	34	30	27	25	62	61	2400
ACS800-U1-0050-7	R5	52	68	46	40	34	30	65	99	2900
ACS800-U1-0060-7	R5	58	84	52	50	42	40	65	99	3450
ACS800-U1-0070-7	R6	79	104	73	60	54	50	65	238	4200
ACS800-U1-0100-7	R6	91	124	86	75	62	60	65	238	5650
ACS800-U1-0120-7	R6	112	172	108	100	86	75	65	238	6700

NOTES:

(1) Overload may be limited to 5% at higher motor speeds (speed >90% motor base speed) by the internal power limit of the drive
(2) Overload may be limited to 40% at higher motor speeds (speed >90% motor base speed) by the internal power limit of the drive
(3) Rating not applicable for all motors. Available for some 4-pole 460V high efficiency NEMA motors.

I_{max} current available for 10 seconds at start.
I_{2N} continuous base current at 40°C (104°F). Overload cycle 110%
I_{2N} for 1 minute / 5 minutes allowed.
I_{2hd} continuous base current at 40°C (104°F). Overload cycle 150%
I_{2hd} for 1 minute / 5 minutes allowed.

- Current ratings do not change with different supply voltages.
- Horsepower ratings are based on NEMA motor ratings for typical 4-pole motors (1800 rpm). Check motor nameplate current for compatibility.
- All ACS800-U1 models come with a US conduit box (conduit plate in NEMA 12) as standard.

Enclosure

Degree of Protection
UL Type 1 (Standard)
UL Type 12 (Optional)
Paint color:
NCS 1502-Y (RAL 90021/PMS 420C)

	UL Type 1					UL Type 12			
Frame size	H1 (in)	H2 (in)	W1 (in)	Depth (in)	Weight (lbs)	H1 (in)	W1 (in)	Depth (in)	Weight (lbs)
R2	15.9	14.6	6.5	6.5	20	20.8	10.4	9.5	34
R3	18.5	16.5	6.8	10.4	31	20.8	10.4	10.7	41
R4	23.9	19.3	9.4	10.8	57	30.5	14.8	10.9	73
R5	29.1	23.7	10.4	11.3	75	30.5	14.8	12.1	112
R6	34.6	27.6	11.8	15.7	148	36.3	16.5	16.5	170

H1 = Height with cable connection box
H2=Height without cable connection box
W1 = Width of the standard unit

Standard application software

Standard application software

Based on ABB's exclusive Direct Torque Control technology, the ACS800 offers highly advanced features as standard. The ACS800 standard application software provides solutions to virtually all AC drives applications.

Adaptive programming

In addition to parameters, industrial drives have the possibility for function block programming as standard. Adaptive programming with 15 programmable function blocks makes it possible to replace relays or even a PLC in some applications. Adaptive programming can be done either by standard control panel or DriveAP, a user-friendly PC tool.

The standard application macros

The ACS800 features built in, pre-programmed application macros for configuration of such parameters as inputs, outputs and signal processing.

- FACTORY SETTINGS for basic industrial applications
- HAND/AUTO CONTROL for local and remote operation
- PID CONTROL for closed loop processes
- SEQUENTIAL CONTROL for repetitive cycles
- TORQUE CONTROL for processes where torque control is required
- USER MACRO 1 & 2 for user's own parameter settings

Software features

A complete set of standard software features offers premium functionality and flexibility.

- Accurate speed control
- Accurate torque control without speed feedback
- Adaptive programming
- Automatic reset
- Automatic start
- Constant speeds
- Controlled torque at zero speed
- DC hold
- DC magnetizing
- Diagnostics
- Flux braking
- Flux optimization
- IR compensation
- Master/follower control
- Mechanical brake control
- Motor identification
- Parameter lock
- Power loss ride-through
- Process PID control
- Programmable I/O
- Scalar control
- Speed controller tuning
- Start-up assistant
- Support for sine filter in the drive output
- Trim function
- User-selectable acceleration and deceleration ramps
- User adjustable load supervision/limitation

Pre-programmed protection functions

A wide range of features provides protection for the drive, motor and the process.

- Ambient temperature
- DC overvoltage
- DC undervoltage
- Drive temperature
- Input phase loss
- Overcurrent
- Power limits
- Short circuit

Programmable protection functions

- Adjustable power limits
- Control signal supervision
- Critical frequencies lock-out
- Current and torque limits
- Earth fault protection
- External fault
- Motor phase loss
- Motor stall protection
- Motor thermal protection
- Motor underload protection
- Panel loss

1025 Exchange St. Boise, ID 83716 USA. Phone 800.894.0412 Fax 208.368.0415
Visit our website at www.clrwtr.com email us at info@clrwtr.com

Standard user interface

Control panel

The industrial drive control panel has a multilingual alphanumeric display (4 lines x 20 characters) with plain text messages in 14 languages.

The control panel is removable and can be mounted on the drive enclosure or remotely.

```
1 L >        1242.0 RPM 1
SPEED        1242.0 RPM
CURRENT      76.00 A
TORQUE       86.00 %
```

Start-up assistant

Easy commissioning with the start-up assistant. The start-up assistant actively guides you through the commissioning procedure step by step. It also has a unique on-line help function.

```
MOTOR SETUP 4/10
MOTOR NOM CURRENT 2
(75.5 A)
ENTER: OK   RESET: BACK
```

Actual value display

The control panel can display three separate actual values simultaneously.
Examples of these are:

- Motor speed
- Frequency
- Current
- Torque
- Power
- References
- DC bus voltage
- Output voltage
- Heatsink temperature
- Operating hours
- Kilowatt hours
- I/O status

Fault memory

A built in fault memory stores information relating to the last 64 faults, each with a time stamp.

```
1 L->        1242.0 RPM 1
2 LAST FAULT
OVERVOLTAGE
          1121 H. 1 MIN
```

Parameter copying

Parameter copy feature allows all drive parameters to be copied from one frequency converter to another simplifying commissioning.

```
1 L->        1242.0 RPM 1
UPLOAD       <= <=
DOWNLOAD     => =>
CONTRAST     4
```

Centralized control

One panel can control up to 31 drives.

```
  -> -> <- ->
  1  21 40 100
  ->
  111
```

Easy programming

Parameters are organized into groups for easy programming.

```
1 L ->   1242.0 RPM 1
11 REFERENCE SELECT
3 EXT REF 1 SELECT
AI1
```

The ACS800 keypad is backward compatible to the ACS600.

1025 Exchange St. Boise, ID 83716 USA. Phone 800.894.0412 Fax 208.368.0415
Visit our website at www.clrwtr.com email us at info@clrwtr.com

Standard user interface

Standard I/O

Analog and digital I/O channels are used for different functions such as control, monitoring and measurement purposes (e.g. motor temperature). In addition, optional I/O extension modules are available providing additional analog or digital I/O connections.

Below are the standard drive control I/O of the ABB industrial drive for the Factory Macro. For other ACS800 application macros the default functions may be different.

Standard I/O on RMIO-01 Board

- **3 analog inputs:** differential, common mode voltage ±15 V, galvanically isolated as a group.
  - One ±0(2)...10 V, resolution 12 bit
  - Two 0(4)...20 mA, resolution 11 bit
- **2 analog outputs:**
  - 0(4)...20 mA, resolution 10 bit
- **7 digital inputs:** galvanically isolated as a group (can be split in two groups)
  - Input voltage 24 V DC
  - Filtering (HW) time 1 ms
- **3 digital (relay) outputs:**
  - Form C contacts
  - 24 V DC or 115/230 V AC
  - Max. continious current 2 A
- **Reference voltage output:**
  - ±10 V ±0.5%, max. 10 mA
- **Auxiliary power supply output:**
  - +24 V ±10%, max. 250 mA

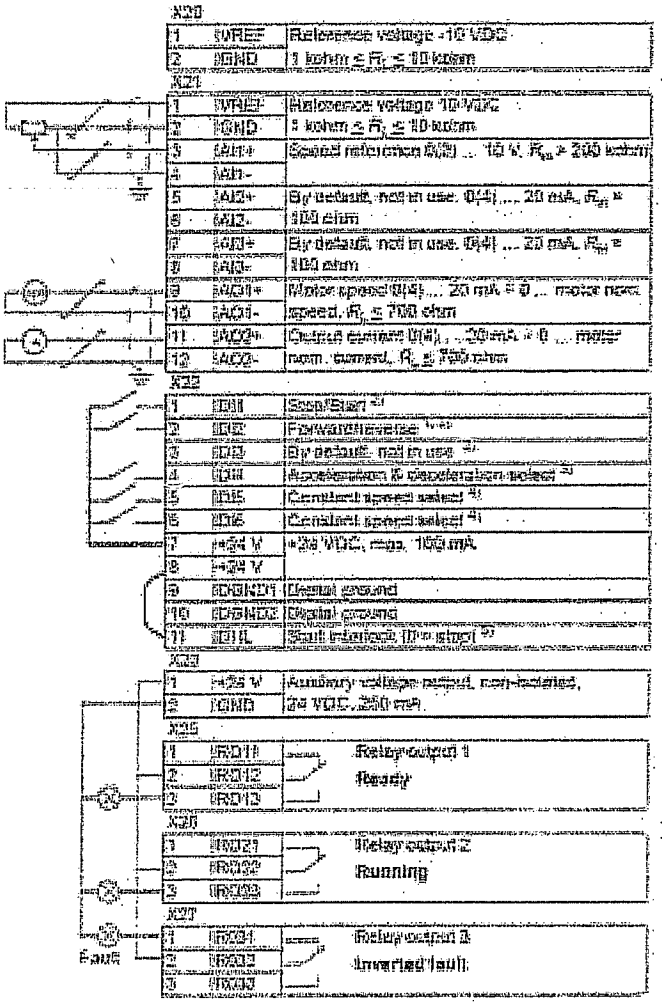

Communications options

Fieldbus control

ABB industrial drives have connectivity to most major automation systems. This is achieved with a dedicated gateway concept between the fieldbus systems and ABB drives.

The fieldbus gateway module can easily be mounted inside the drive. Because of the wide range of fieldbus gateways, your choice of automation system is independent of your decision to use first-class ABB AC drives.

Manufacturing flexibility

Drive control

The drive control word (16 bit) provides a wide variety of functions from start, stop and reset to ramp generator control. Typical setpoint values such as speed, torque and position can be transmitted to the drive with 15 bit accuracy.

Drive monitoring

A set of drive parameters and/or actual signals, such as torque, speed, position, current etc., can be selected for cyclic data transfer providing fast data for operators and the manufacturing process.

Drive diagnostics

Accurate and reliable diagnostic information can be obtained via the alarm, limit and fault words, reducing the drive downtime and therefore the downtime of the manufacturing process.

Drive parameter handling

Total integration of the drives in the production process is achieved by single parameter read/write up to complete parameter set-up or download.

Reduced installation and engineering effort

Cabling

Substituting the large amount of conventional drive control cabling with a single communication cable reduces costs and increases system reliability.

Design

The use of fieldbus control reduces engineering time at installation due to the modular structure of the hardware and software.

Commissioning and assembly

The modular machine configuration allows pre-commissioning of single machine sections and provides easy and fast assembly of the complete installation.

Currently available gateways

Fieldbus	Protocol	Device profile	Baud rate
PROFIBUS (+K454)	DP, DPV1	PROFIdrive ABB Drives *)	9.6 kbit/s - 12 Mbit/s
DeviceNet (+K451)	-	AC/DC drive ABB Drives *)	125 kbit/s - 500 kbit/s
ControlNet (+K462)	-	AC/DC drive ABB Drives *)	5 Mbit/s
Modbus (+K458)	RTU	ABB Drives *)	600 bit/s - 19.2 kbit/s
Ethernet (+K466)	Modbus/TCP Ethernet/IP	ABB Drives *)	10 Mbit/s / 100 Mbit/s

*) Vendor specific profile

NOTE:
Additional Fieldbus module options are available. Contact your local ABB representative for more information.

1025 Exchange St. Boise, ID 83716 USA. Phone 800.894.0412 Fax 208.368.0415
Visit our website at www.clrwtr.com email us at info@clrwtr.com

1422 Series Two Door Floormount Enclosures - NEMA 12, 4

Continuous Hinge, Clamped Doors

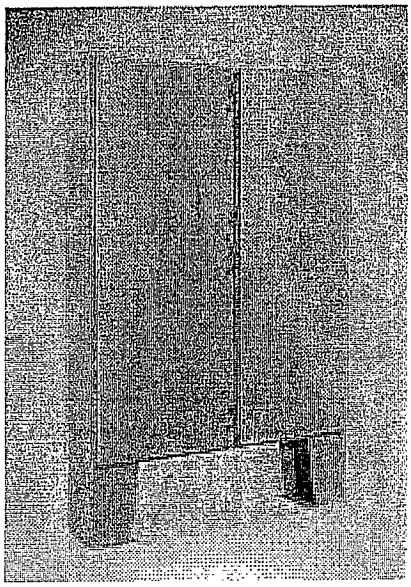

Inner Panel Included

Application

- Designed to house electrical, electronic, hydraulic or pneumatic controls and instruments.
- Provides protection where equipment may be hosed down or otherwise be very wet, or in outdoor applications for full weather protection.

Standards

- UL 508 Type 3R, 4 and 12
- CSA Type 3R, 4 and 12
- **Complies with**
  - NEMA Type 3R, 4 12 and 13
  - JIC EGP-1-1967
  - IEC 529, IP66

Construction

- Formed 12 gauge steel.
- Smooth, continuously welded seams without knockouts, cutouts or holes.
- Body stiffeners are provided in the larger enclosures for extra rigidity.
- Heavy duty lifting eyebolts are provided with reinforcing support angles.
- Center post is removable for easy installation of the inner panel.
- Formed lip on door and top of enclosure opening exclude flowing liquids and contaminants.
- Continuously hinged doors may be removed by pulling the stainless steel hinge pin.
- Doors are secured with heavy duty stainless steel clamps.
- Provision for padlocking.
- 12" floor stands are welded to the enclosure.
- Oil resistant gaskets are permanently secured and mechanically retained.
- A removable 10 gauge inner panel is included.
- Panel supports are provided for easy panel installation.
- Collar studs are provided for mounting inner panels.
- A bonding stud is provided on the door and a grounding stud is provided in the enclosure for each door.
- A literature pocket is provided for the inside of the door.

Finish

- Cover and enclosure are finished in recoatable smooth ANSI/ASA 61 gray powder coating.
- Removable white inner panel is finished in white powder coating.

Accessories

- Additional inner panels...*see page* **385**
- Air conditioners...*see page* **348-357**
- Blowers...*see page* **359**
- Breather kits...*see page* **374**
- Door stop kits...*see page* **393**
- Drip shield kits...*see page* **393**
- Enclosure stabilizers...*see page* **397**
- Filter fans...*see page* **360-367**
- Floor stand kits...*see page* **394**
- Heaters...*see page* **369-371**
- Light kit...*see page* **393**
- Louvered ventilating plates...*see page* **396**
- Thermostats...*see page* **374**
- Window kits...*see page* **391**

Technical references and DXF downloads available at www.hammfg.com

All dimensions in inches unless specified otherwise

© Hammond Manufacturing

1422 Series Two Door Floormount Enclosures - NEMA 12, 4

Continuous Hinge, Clamped Doors

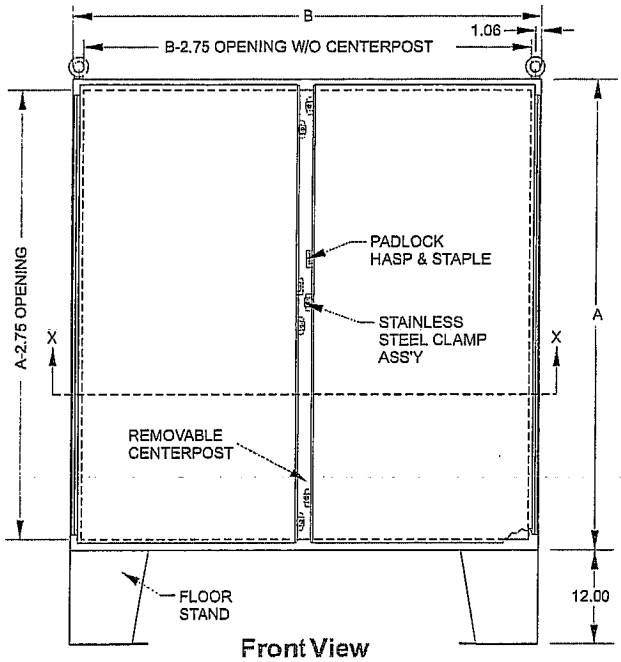

Front View

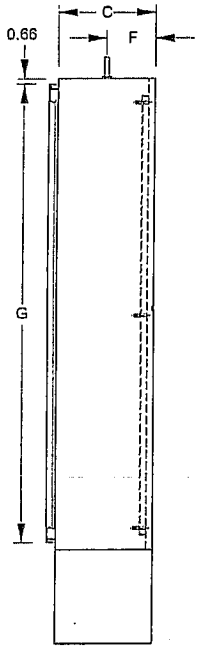

Side View

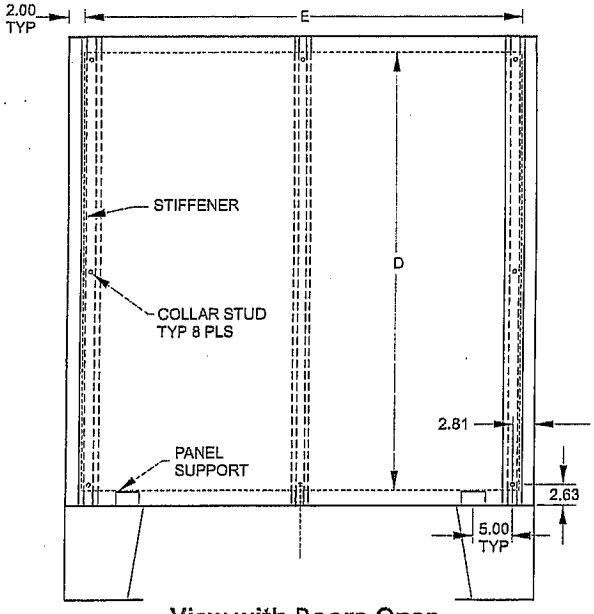

View with Doors Open

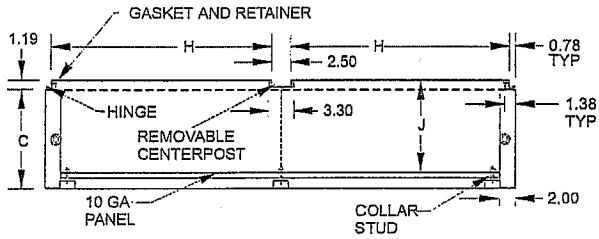

Section X-X

Part No.	A	B	C	Body Gauge	Panel Gauge	Panel Size D	Panel Size E	F	G	H	J	Ship Wt. Kg.
1422N4D16F	1527	1525	424	12	10	1422	1422	204	1488	711	405	260

Technical references and DXF downloads available at www.hammfg.com

All dimensions in inches unless specified otherwise

© Hammond Manufacturing

Disconnect Switches

Fusible
Non-fusible
Enclosed

AC 1240

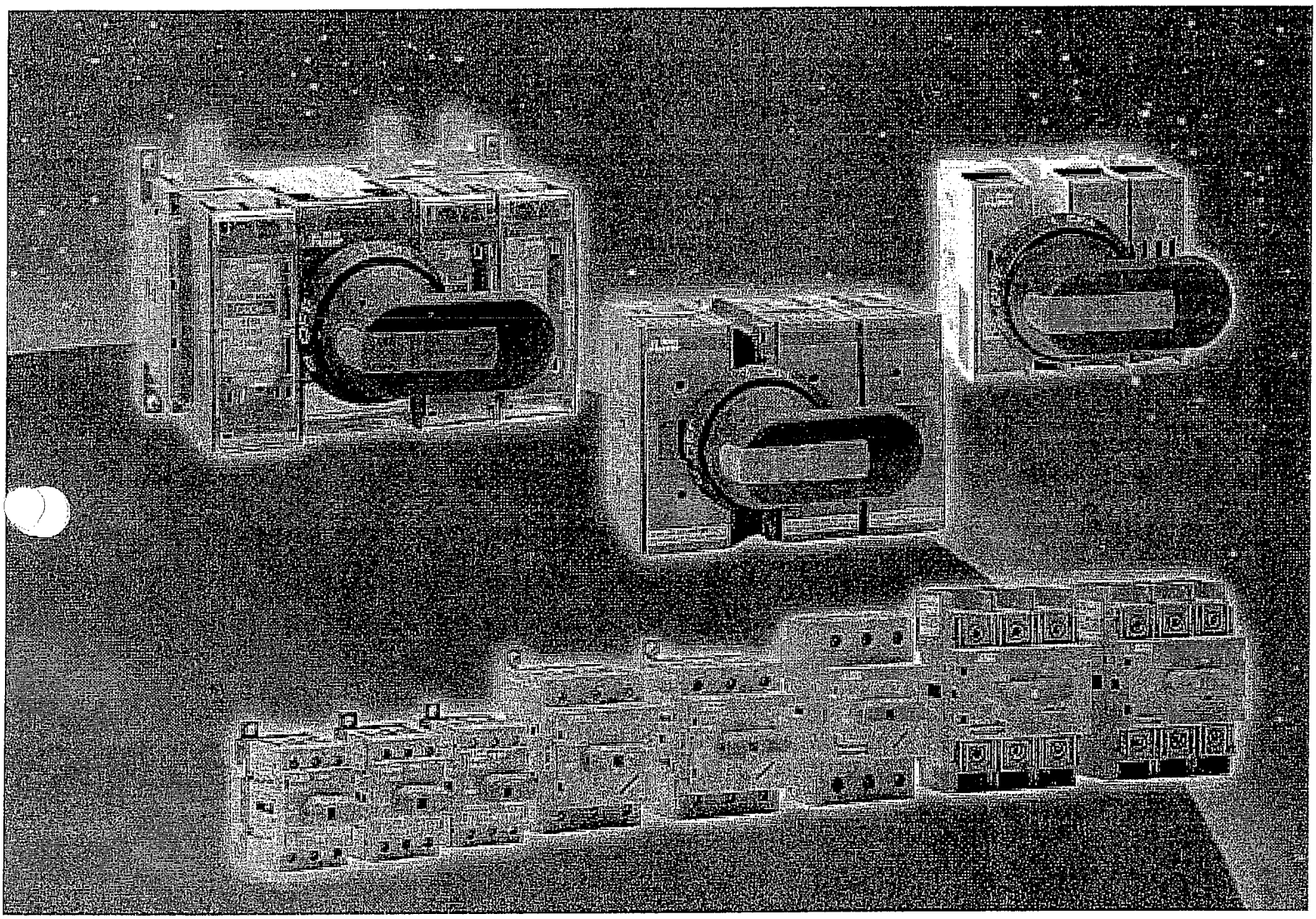

ABB

Overview
Fusible disconnect switches
OS30A – OES800L3

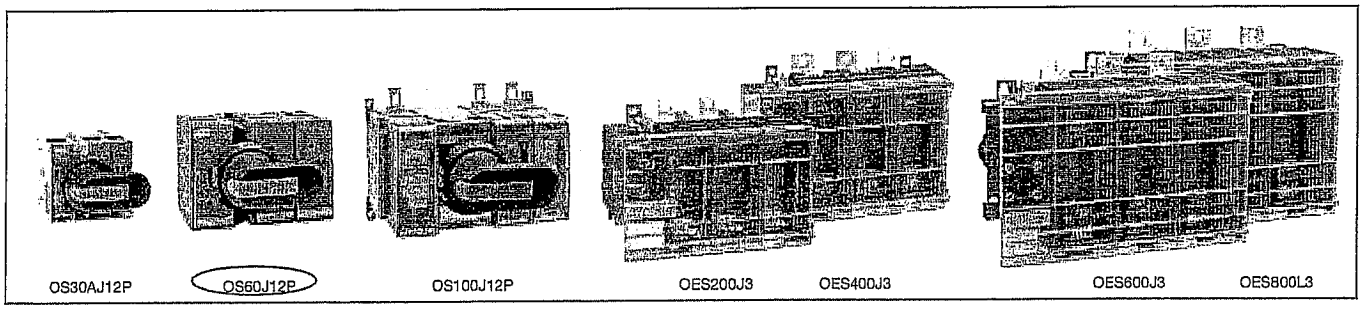

Catalog number	3 pole	OS30AJ12	OS60J12	OS100J12	OES200J3	OES400J3	OES600J3	OES800L3
General purpose amp rating	A	30	60	100	200	400	600	800
Catalog reference	Page #	2.9	2.11	2.11	2.14	2.14	2.14	2.14
Approvals①								
	2 pole	N/A	N/A	CSA C22.2 No.4	CSA C22.2 No.4	CSA C22.2 No.4	CSA C22.2 No.4	CSA C22.2 No.4
	3 pole	CSA C22.2 No.4	CSA C22.2 No.4	CSA C22.2 No.4	CSA C22.2 No.4	CSA C22.2 No.4	CSA C22.2 No.4	CSA C22.2 No.4
	4 pole	CSA C22.2 No.4	CSA C22.2 No.4	CSA C22.2 No.4	CSA C22.2 No.4	CSA C22.2 No.4	CSA C22.2 No.4	CSA C22.2 No.4
Technical ratings (CSA,UL)								
Max operating voltage	V	600	600	600	600	600	600	600
Max horsepower rating Three phase								
208V	HP	7.5	15	25	50	125	150	200
240V	HP	7.5	15	30	60	125	200	250
480V	HP	15	30	60	125	250	400	500
600V	HP	20	50	75	150	350	500	600
Single phase								
120V	HP	2	—	—	—	—	—	—
240V	HP	3	—	—	—	—	—	—
CSA fuse class		J/CC	J	J	J	J	J	L
Technical ratings (IEC)								
Rated insulation and operational voltage. AC20 and DC20②		1000	1000	1000	1000	1000	1000	1000
Rated thermal current, I_{th}								
AC 20/DC 20 open	A	32	63	160	200	400	630	800
AC 20/DC 20 enclosed	A	32	63	160	200	400	600	720
AC 21A ≤500V	A	32	63	160	200	400	630	800
≤690V	A	32	63	160	200	400	630	800
Rated operational power AC23								
400/415V	kW	14/15	30	80/90	100/110	210/230	315/340	350/380
690V	kW	25	60	132	180	330	540	600
Weight 3 pole switch	KG	0.7	1.6	1.8	6.9	7.8	17.0	17.0
4 pole	KG	0.9	1.9	2.3	7.9	8.8	21.0	21.0
Dimension 3 pole	H mm	97	100	143	200	200	290	290
	W mm	106	145	223	262	285	373	373
	D mm	107	128	131	199	206	234	234
Accessories								
Double break contacts		S	S	S	S	S	S	S
Fuse cover		S	S	S	S	S	S	S
Terminal lug kit		Integral	Integral	OZXA-24	OZXA-25	OZXA-26	OZXA-27	OZXA-27
Terminal shroud		Not required	Not required	•	•	•	•	•
Auxiliary contact		•	•	•	•	•	•	•
Handle CSA/NEMA type								
Type 1, 3R, 12		•	•	•	•	•	•	•
Type 1, 3R, 4, 4X, 12		•	•	•	•	•	•	•
Conversion kit								
6 pole		•	•	•	•	•	•	•
Transfer		•	•	•	•	•	•	•
Bypass		—	—	—	•	•	•	•
Mechanical interlock		•	•	•	•	•	•	•
Electrical interlock		—	—	—	•	•	•	•

S = Standard
• = Available
– = Not available

CSA approved, UL listed, IEC rated, CE marked

① CSA approved switches are also UL listed.
② 1000V IEC 408

3-pole Contactors
4-pole Contactors
Specific Contactors
Applications
Technical Data

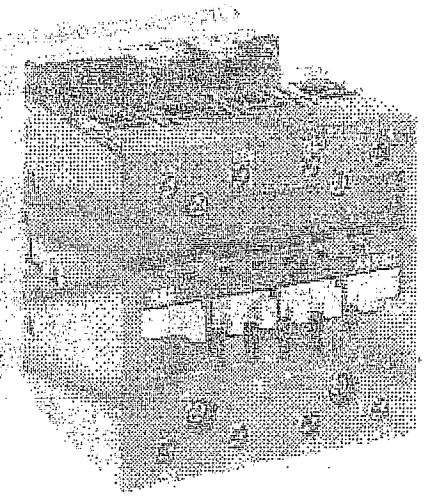

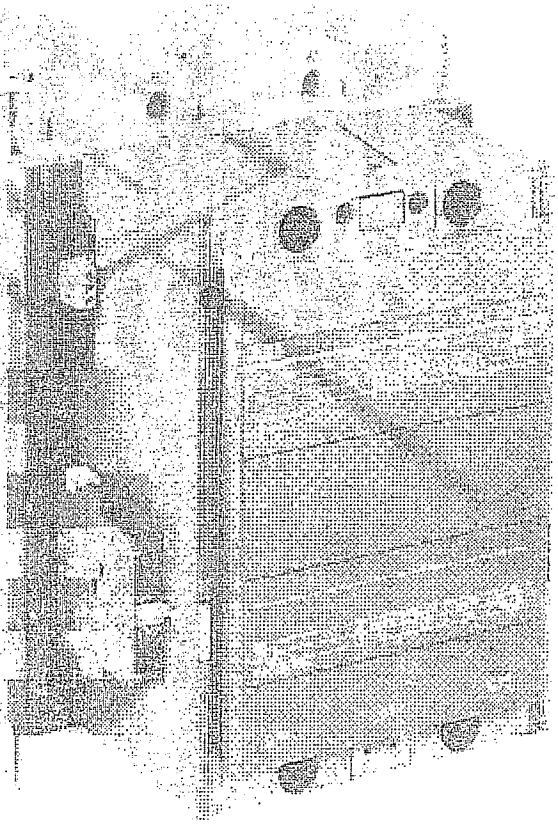

a.c. Circuit Switching

d.c. Circuit Switching

Capacitor Switching

Lighting Circuits

A 9 ... A 110 3-pole Contactors

a.c. Operated

Application

A 9 ... A 110 contactors are mainly used for controlling 3-phase motors and generally for controlling power circuits up to 600 V a.c. or 220 V d.c. / 440 V d.c. The contactors can also be used for many other applications such as isolation, capacitor switching, lighting.
(☞ next pages in this section).

Description

The **A...** series 3-pole contactors are of the block type design.

- Main poles and auxiliary contact blocks

A 9 ... A 40 1-stack contactors:
- 3 main poles,
- 1 built-in auxiliary contact,
- front and side mounted add-on auxiliary contact blocks.

Auxiliary contacts for safety circuits: ☞ page 7/5.

A 50 ... A 110 contactors:
- 3 main poles,
- front and side mounted add-on auxiliary contact blocks.

A 9 ... A 40 2-stack contactors:
- 1st stack with 3 main poles and 1 built-in auxiliary contact,
- 2nd stack with 4 built-in auxiliary contacts,
- side mounted add-on auxiliary contact blocks.

The built-in auxiliary contact elements are mechanically linked.

- Control circuit: a.c. operated with laminated magnet circuit.
- Accessories: a wide range of accessories are available
(☞ next pages and section 4).

Variants ☞ next pages in this section

- 4-pole: A 9 ... A 75 contactors (with 4 N.O. or 2 N.O. + 2 N.C. main poles).
- a.c./d.c. operated controlled supply: AF 50 ... AF 110 contactors.
- d.c. operated: AE 9 ... AE 110 and AL 9 ... AL 40 contactors.
- d.c. operated with large coil voltage range: TAE 9 ... TAE 110 and TAL 9 ...TAL40 contactors.
- contactors for capacitor switching (UA..-R types), contactors for d.c. switching (GA..., GAE... types).

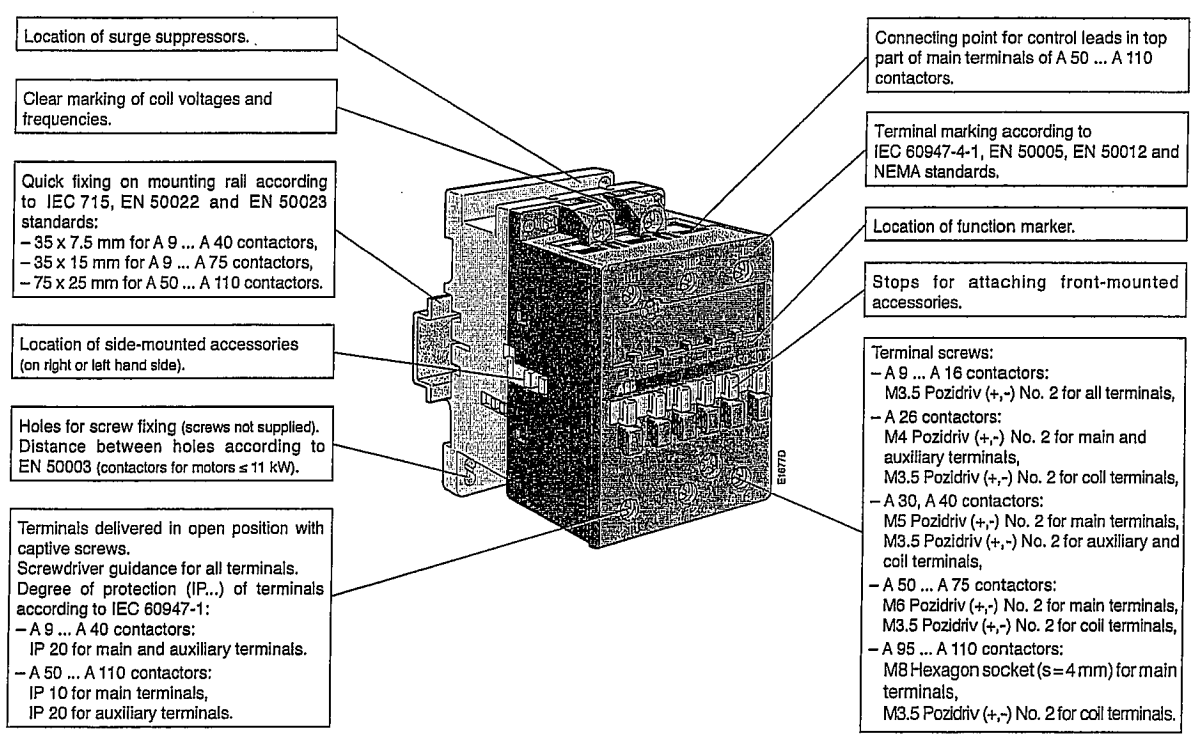

A 9 ... A 110 3-pole Contactors

a.c. Operated

A 9-30-10

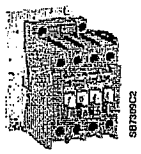

A 26-30-10

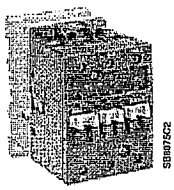

A 50-30

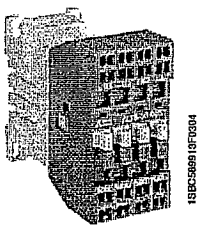

A 16-30 ST

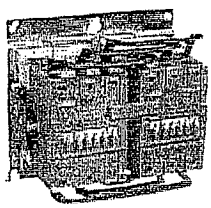

A 110R-30-11-84

Coil voltages and codes

Voltage 50Hz	Voltage 60Hz	Code □□
24	24	8 1
48	48	8 3
110	110 ... 120	8 4
220 ... 230	230 ... 240	8 0
400 ... 415	480	5 1
500	600	5 5

☞ Other voltages: page 0/1.

Non-Reversing Ordering Details

CSA/UL Ratings

General Purpose Current AC-1	Motor Switching Current AC-3	Maximum motor horsepower ratings 1-phase 120V	1-phase 240V	1-phase 208V	3-phase 240V	3-phase 480V	3-phase 600V	Auxiliary contacts		Order code (state coil voltage code □□ (see table below)
21	9	0.5	2	2	2	5	7.5	1	–	A9-30-10-□□
		0.5	2	2	2	5	7.5	–	1	A9-30-01-□□
25	11	0.75	2	3	3	7.5	10	1	–	A12-30-10-□□
		0.75	2	3	3	7.5	10	–	1	A12-30-01-□□
30	17	1	3	5	5	10	15	1	–	A16-30-10-□□
		1	3	5	5	10	15	–	1	A16-30-01-□□
40	28	2	5	7.5	10	20	25	1	–	A26-30-10-□□
		2	5	7.5	10	20	25	–	1	A26-30-01-□□
50	34	3	7.5	10	10	25	30	1	–	A30-30-10-□□
		3	7.5	10	10	25	30	–	1	A30-30-01-□□
60	42	3	7.5	10	15	30	40	1	–	A40-30-10-□□
		3	7.5	10	15	30	40	–	1	A40-30-01-□□
80	54	3	10	15	20	40	50	1	1	A50-30-11-□□
90	65	5	10	20	25	50	60	1	1	A63-30-11-□□
105	80	7.5	15	25	30	60	75	1	1	A75-30-11-□□
125	95	7.5	20	30	30	60	75	1	1	A95-30-11-□□
140	110	10	25	30	40	75	100	1	1	A110-30-11-□□

3-pole with Spring Terminals

21	9	0.5	2	2	2	5	7.5	–	–	A9-30-00-□□
25	11	0.75	2	3	3	7.5	10	–	–	A12-30-00-□□
30	17	1	3	5	5	10	15	–	–	A16-30-00-□□

Reversing, with Mechanical and Electrical Interlock

21	9	0.5	2	2	2	5	7.5	1	–	A9R-30-10-□□
		0.5	2	2	2	5	7.5	–	1	A9R-30-01-□□
25	11	0.75	2	3	3	7.5	10	1	–	A12R-30-10-□□
		0.75	2	3	3	7.5	10	–	1	A12R-30-01-□□
30	17	1	3	5	5	10	15	1	–	A16R-30-10-□□
		1	3	5	5	10	15	–	1	A16R-30-01-□□
40	28	2	5	7.5	10	20	25	1	–	A26R-30-10-□□
		2	5	7.5	10	20	25	–	1	A26R-30-01-□□
50	34	3	7.5	10	10	25	30	1	–	A30R-30-10-□□
		3	7.5	10	10	25	30	–	1	A30R-30-01-□□
60	42	3	7.5	10	15	30	40	1	–	A40R-30-10-□□
		3	7.5	10	15	30	40	–	1	A40R-30-01-□□
80	54	3	10	15	20	40	50	1	1	A50R-30-11-□□
90	65	5	10	20	25	50	60	1	1	A63R-30-11-□□
105	80	7.5	15	25	30	60	75	1	1	A75R-30-11-□□
125	95	7.5	20	30	30	60	75	1	1	A95R-30-11-□□
140	110	10	25	30	40	75	100	1	1	A110R-30-11-□□

2-Position Push-Pull and Push-Pull/Twist Release, Non-Illuminated

Note: A jumbo or large legend plate is recommended, if space allows.

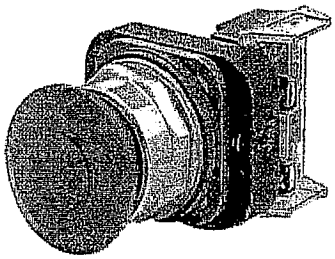

2-Position Push-Pull
Cat. No. 800T-FX6D4

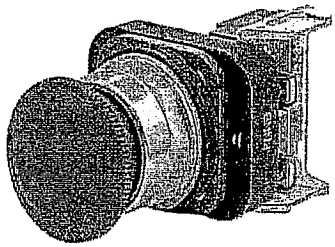

2-Position Push-Pull/Twist
Cat. No. 800T-FXT6D4

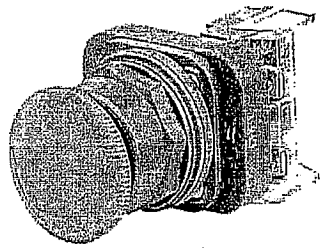

2-Position Push-Pull/Twist
Cat. No. 800H-FRXT6D4

Contact Type	Operator Position: Maintained Out	Operator Position: Maintained In	Button Color	Type 4/13 Push-Pull Cat. No.	Type 4/13 Push-Pull/Twist Release Cat. No.	Type 4/4X/13 Push-Pull/Twist Release Cat. No.
N.C.L.B. ❶	X	O	Red	800T-FX6D4	800T-FXT6D4	800H-FRXT6D4
N.O. - N.C.L.B. ❶	O X	X O	Red	800T-FX6A1	800T-FXT6A1	800H-FRXT6A1
N.C.L.B. - N.C.L.B. ❶	X X	O O	Red	800T-FX6A5	800T-FXT6A5	800H-FRXT6A5
S.M.C.B. ❶❷	X	O	Red	800TC-FX6D4S	800TC-FXT6D4S	800HC-FRXT6D4S
N.O. - S.M.C.B. ❶❷	O X	X O	Red	800TC-FX6A1S	800TC-FXT6A1S	800HC-FRXT6A1S
S.M.C.B. - S.M.C.B. ❶❷	X X	O O	Red	800TC-FX6A5S	800TC-FXT6A5S	800HC-FRXT6A5S

Note: X = Closed/O = Open
Note: Emergency stop push buttons are compliant with EN-418 and IEC 60947-5-5 Standards when using N.C.L.B. contact blocks.

❶ Normally closed late break contact. When button is pushed from the OUT to IN position, the mechanical detent action of the operator occurs before electrical contacts change state. When the button is pulled from the IN to the OUT position, the electrical contacts change state before the mechanical detent occurs.
❷ The Self Monitoring Contact Block (S.M.C.B.) is composed of a N.C.L.B. contact wired in series with a N.O. monitoring contact. The N.O. monitoring contact automatically closes when the S.M.C.B. is properly installed onto the E-stop operator. If the S.M.C.B. is separated from the E-stop operator, the N.O. monitoring contact will automatically open.

Accessories — Page 46
Legend Plates — Page 59
Approximate Dimensions — Page 65

3-Position Selector Switch Units, Non-Illuminated

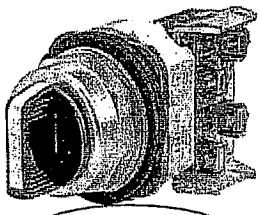

Standard Knob Operator
Cat. No. 800T-J2A

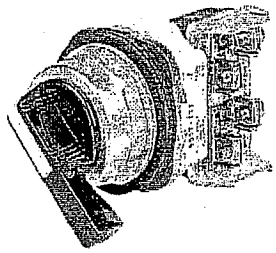

Knob Lever Operator
Cat. No. 800T-J17A

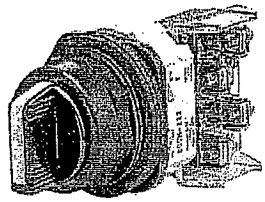

Standard Knob Operator
Cat. No. 800H-JR2A

Contact Type	Operator Position			Operator Type M = Maintained S = Spring Return	Type 4/13 Standard Knob Cat. No.	Type 4/13 Knob Lever Cat. No.	Type 4/4X/13 Standard Knob Cat. No.
No Contacts	—	—	—	M M M	800T-J2	800T-J17	800H-JR2
				S→M M	800T-J4	800T-J18	800H-JR4
				M M←S	800T-J5	800T-J19	800H-JR5
				S→M←S	800T-J91	800T-J20	800H-JR91
1 N.O. - 1 N.C.	O X	O O	X O	M M M	800T-J2A	800T-J17A	800H-JR2A
				S→M M	800T-J4A	800T-J18A	800H-JR4A
				M M←S	800T-J5A	800T-J19A	800H-JR5A
				S→M←S	800T-J91A	800T-J20A	800H-JR91A

Note: X = Closed/O = Open

800 T — J 2 — C
a b c d e f

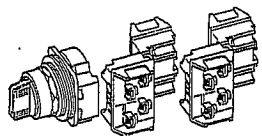

a

Protection Rating	
Code	Description
T	Metal, Type 4/13
H	Plastic, Type 4/4X/13

b

Finger-Safe Guards	
Code	Description
Blank	No Guards
C	Guards on Terminals

c

Knob Insert Colors		
800T Type 4/13 Code	Description	800H Type 4/4X/13 Code
J	White	JR
JA	Red	JRA
JB	Green	JRB
JC	Blue	JRC
JE	Yellow	JRE
JF	Orange	JRF
JX	Packet of Colored Inserts ❶	JRX
Metal Wing Lever Colors ❷		
Code	Color	Code
JA	Red	—
JG	Gray	—

d

Knob/Lever Type Operators	
Standard Knob	
Code	Operator Function
2	Maintained
4	Spring Return from Left
5	Spring Return from Right
91	Spring Return from Both
Knob Lever ❷	
Code	Operator Function
17	Maintained
18	Spring Return from Left
19	Spring Return from Right
20	Spring Return from Both
Metal Wing Lever ❷	
Code	Operator Function
11	Maintained
15	Spring Return from Left
16	Spring Return from Right
141	Spring Return from Both
Coin Slot ❷	
Code	Operator Function
10	Spring Return from Both

e

Cam Option ❸	
Code	Description
Blank	KB7 Cam (Std.)
KA1	KA1 Cam
KA7	KA7 Cam
Note: See Table 1 for cam selections.	

e (cont'd)

Cam Option ❸	
Code	Description
KC1	KC1 Cam
KC7	KC7 Cam
KD7	KD7 Cam
KE7 ❹	KE7 Cam
KQ1	KQ1 Cam
KQ7	KQ7 Cam
KR1 ❹	KR1 Cam
KR7 ❹	KR7 Cam
KT1 ❹	KT1 Cam
KT7 ❹	KT7 Cam
KU7 ❹	KU7 Cam
Note: See Table 1 for cam selections.	

f

Contact Blocks	
Code	Description
Blank	No Contacts on operator
Standard	
A	1 N.O. - 1 N.C. 1-800T-XA on white side
B	2 N.O. - 2 N.C. 2-800T-XAs — 1 on white side/1 on black side
PenTUFF (Low Voltage)	
AV	1 N.O. - 1 N.C. 1-800T-XAV on white side
BV	2 N.O. - 2 N.C. 2-800T-XAVs — 1 on white side/1 on black side

f (cont'd)

Contact Blocks	
Code	Description
Class 1, Div. 2/Zone 2	
Logic Reed	
AR	1 N.O. - 1 N.C. 1-800T-XAR on white side
BR	2 N.O. - 2 N.C. 2-800T-XARs — 1 on white side/1 on black side
Sealed Switch	
AP	1 N.O. - 1 N.C. 1-800T-XAP on white side
BP	2 N.O. - 2 N.C. 2-800T-XAPs — 1 on white side/1 on black side
Stackable Sealed Switch	
AY	1 N.O. - 1 N.C. 1-800T-XAY on white side
BY	2 N.O. - 2 N.C. 2-800T-XAYs — 1 on white side/1 on black side
Note: Associated targets shown in Table 1.	

❶ Packet of colored inserts, one of each color.
❷ Only available on 800T, Type 4/13 operators.
❸ If an overlapping cam is required, consult factory.
❹ Wing levers are not suitable with these cam codes.

Table 1. Cam and Contact Block Functionality Table (Note: X = Closed/O = Open)

Contact Block Suffix Code	Contact Block Side	Ckts	Cam Codes: KB7 (Std.)	KA1	KA7	KC1	KC7	KD7	KE7	KQ1	KQ7	KR1	KR7	KT1	KT7	KU7
A_	White	A	X O O	X O O	O O X	O O X	X O O	O O X	X O O	X O X	X O X	X O X	X O X	O O X	X O O	X O O
		B	O O X	O X O	X O O	X O O	X O O	X O O	X O X	O X O	O X O	O X O	O X O	X O O	O X O	X O O
B_	Black	A	X O O	X O O	O O X	O O X	X O O	X O O	O O X	X O O	X O O	O O X	X O O	O O X	X O O	O O X
		B	O O X	O X O	O X O	X O O	O O X	O X O	X X O	O X O	O X O	X X O	O X X	X X O	O X X	X X O
C_	White	A	X O O	X O O	O O X	O O X	X O O	O O X	X O O	X O X	X O X	X O X	X O X	O O X	X O O	X O O
		B	O O X	O X O	O X O	X O O	X O O	X O O	X X O	X O O	X O O	X O O	X O O	O O O	X O X	O X O
	Black	A	X O O	X O O	O O X	O O X	X O O	X O O	O O X	X O O	X O O	O O X	X O O	O O X	X O O	O O X
		B	O O X	O X O	O X O	X O O	O O X	O X O	X X O	O X O	O X O	X X O	X X O	O X X	X X O	X X O

Pilot Light Units❸

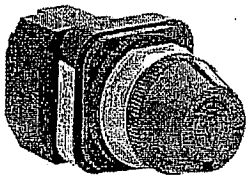
Transformer Type Pilot Light
Cat. No. 800T-P16R

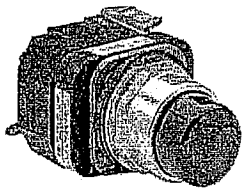
Push-to-Test Pilot Light
Cat. No. 800T-PT16R

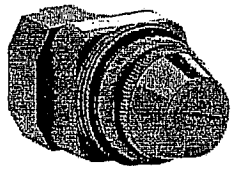
Transformer Type Pilot Light
Cat. No. 800H-PR16R

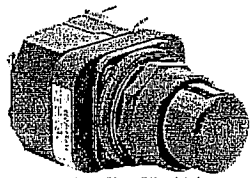
Push-to-Test Pilot Light
Cat. No. 800H-PRT16R

Type	Lamp	Volts	Color	Type 4/13 Pilot Light Cat. No.	Type 4/13 Push-to-Test ❶ Cat. No.	Type 4/4X/13 Pilot Light Cat. No.	Type 4/4X/13 Push-to-Test ❶ Cat. No.
Operator Only ❷				800T-S00	800T-SB00XX	800H-SR00	800H-SRB00XX
Full Voltage	Incandescent	24 AC/DC	Red	800T-Q24R	800T-QT24R	800H-QR24R	800H-QRT24R
			Green	800T-Q24G	800T-QT24G	800H-QR24G	800H-QRT24G
			Amber	800T-Q24A	800T-QT24A	800H-QR24A	800H-QRT24A
	LED	120 AC	Red	800T-QH10R	800T-QTH10R	800H-QRH10R	800H-QRTH10R
			Green	800T-QH10G	800T-QTH10G	800H-QRH10G	800H-QRTH10G
			Amber	800T-QH10A	800T-QTH10A	800H-QRH10A	800H-QRTH10A
		24 AC/DC	Red	800T-QH24R	800T-QTH24R	800H-QRH24R	800H-QRTH24R
			Green	800T-QH24G	800T-QTH24G	800H-QRH24G	800H-QRTH24G
			Amber	800T-QH24A	800T-QTH24A	800H-QRH24A	800H-QRTH24A
	No Lamp	0...250 AC/DC	No Lens	800T-QN25	800T-QTN25	800H-QRN25	800H-QRTN25
Transformer	Incandescent	120 AC 50/60 Hz	Red	800T-P16R	800T-PT16R	800H-PR16R	800H-PRT16R
			Green	800T-P16G	800T-PT16G	800H-PR16G	800H-PRT16G
			Amber	800T-P16A	800T-PT16A	800H-PR16A	800H-PRT16A
	LED		Red	800T-PH16R	800T-PTH16R	800H-PRH16R	800H-PRTH16R
			Green	800T-PH16G	800T-PTH16G	800H-PRH16G	800H-PRTH16G
			Amber	800T-PH16A	800T-PTH16A	800H-PRH16A	800H-PRTH16A
	No Lamp		No Lens	800T-PN16	800T-PTN16	800H-PRN16	800H-PRTN16

❶ Includes one standard 800T-XA (1 N.O. - 1 N.C.) contact block. For typical pilot light wiring diagrams, see page 65.
❷ Operator only supplied without power module, lamp, lens cap, or contact blocks.
❸ All pilot lights, except push-to-test without sealed contacts and dual input transformer relay, are rated for Class 1, Division 2 applications.

	a	b	c	d	e	f	g	h	
800	T		– P			16	R		(Pilot Lights)
800	T		– Q	T		24	G	AR	(Push-to-Test)

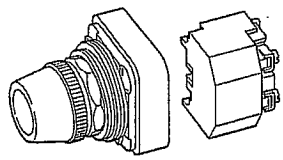

a

Protection Rating	
Code	Description
T	Metal, Type 4/13
H	Plastic, Type 4/4X/13

b

Finger-Safe Guards	
Code	Description
Blank	No Guards
C	Guards on Terminals

c

Power Module Type		
800T Type 4/13 Code	Description	800H Type 4/4X/13 Code
P	Transformer (or Dual Input)	PR
Q	Full Voltage (or Resistor)	QR
R	Neon ❹	RR

❹ Neon is only available in amber or clear.
❺ Diode type dual input provides circuit isolation via opposing diodes. Not recommended for use with solid-state outputs and neon indicators.
❻ Flashing lamps are only available in 6V full voltage units and all transformer units.

d

Lamp Test Options	
Code	Description
Blank	No Test Option
T	Push-to-Test
D	Dual Input — Diode ❺
DT	Dual Input — Transformer Relay
Note: Push-to-Test Pilot Light is supplied with a factory jumpered 800T-XA, 1 N.O.-1 N.C. Contact Block.	

e

Illumination Options	
Transformer/Full Voltage	
Code	Description
Blank	Incandescent
F	Flashing Incandescent ❻
H	LED ❼
Resistor/Neon	
Blank	No Options
Dual Input	
Blank	Incandescent
H	LED ❼

❼ LEDs available in red, green, amber, blue, and white. White LEDs only available in 6V, 24V, 120V, and 130V full voltage and all transformer units. LED color matches lens color, except clear lens supplied with white LED and white lens supplied with amber LED. All LEDs except 120V have an internal shunt resistor for use with solid-state outputs.

f

Voltage	
Transformer	
Code	Description
36	48V AC 50/60 Hz
16	120V AC 50/60 Hz
26	240V AC 50/60 Hz
76	277V AC 50/60 Hz
46	480V AC 50/60 Hz
56	600V AC 50/60 Hz
Full Voltage	
06	6V AC/DC
12	12V AC/DC
24	24V AC/DC
32	32V AC/DC ❽
48	48V AC/DC
10	120V AC/DC ❾
13	130V AC/DC ❽
20	240V AC/DC ❽
Resistor	
11	120V AC/DC Resistor
Neon	
10	120V AC/DC
20	240V AC/DC
Dual Input	
16	120V AC
24	24V AC/DC (Dual input diode only)

❽ 32V and 130V are LED only. 240V is incandescent only.
❾ 120V LED is AC only and does not contain internal shunt resistor. For AC/DC and internal shunt resistor, order 130V AC/DC LED (Code 13).

g

Lens Color		
Plastic Code	Color	Glass Code ❿
Blank	No Lens	Blank
A	Amber	D
B	Blue	E
C	Clear	F
G	Green	H
R	Red	J
W	White	K

h

Contact Blocks (Push-to-test units only)	
Code	Description
Standard	
Blank	1 N.O. - 1 N.C.
Pen*TUFF* (Low Voltage)	
AV	1 N.O. - 1 N.C.
Class 1, Div. 2/Zone 2	
Logic Reed	
AR	1 N.O. - 1 N.C.
Sealed Switch	
AP	1 N.O. - 1 N.C.
Stackable Sealed Switch	
AY	1 N.O. - 1 N.C.

❿ Glass lens available on 800T pilot lights only. Not available on 800T push-to-test units oro on 800H devices.

Class T Fuseblocks

600 Volt, ½ to 600 Amps

T600

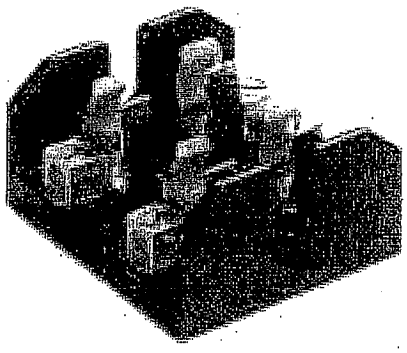

Class T Fuseblocks (600V) Catalog Data

Amps	Poles	Catalog Numbers: Screw	Catalog Numbers: Box Lug	Figure Number	Max. Wire Size
½–30	1	T60030-1SR	T60030-1CR	1	SR #10CU, CR #2CU-AL
	2	T60030-2SR	T60030-2CR		
	3	T60030-3SR	T60030-3CR		
31–60	1	T60060-1SR	T60060-1CR	2	CR#2CU-AL
	2	T60060-2SR	T60060-2CR		
	3	T60060-3SR	T60060-3CR		SR #10CU
61–100	1	—	T60100-1C	3	2/0 CU-AL
	2	—	T60100-2C		
	3	—	T60100-3C		
101–200	1	—	T60200-1C	4	250kcmil CU-AL
	3	—	1B0089		
201–400	1	—	T60400-1C	5	600kcmil CU-AL
401–600	1	—	T60600-1C	6	(2) 600kcmil CU-AL

Catalog Symbol: T600
Ampere Rating: ½ to 600 Amperes
Voltage Rating: 600 Volts
Agency Information:
UL Listed, UL512, Guide IZLT, File E14853
CSA Certified, C22.2 No. 39, Class 6225-01, File 47235
Withstand Rating: 200,000A RMS Sym.
For use with Class T fuses (Bussmann JJS and LPT).
Materials: Glass Polyester, Phenolic on 600A
UL Flammability: 94 VO

CE CE logo denotes compliance with European Union Low Voltage Directive (50-1000 VAC, 75-1500 VDC). Refer to Data Sheet #8002 or contact Bussmann Application Engineering at 636-527-1270 for more information.

Dimensional Data

Figure 1. ½A to 30A All dimensions (± 0.016)

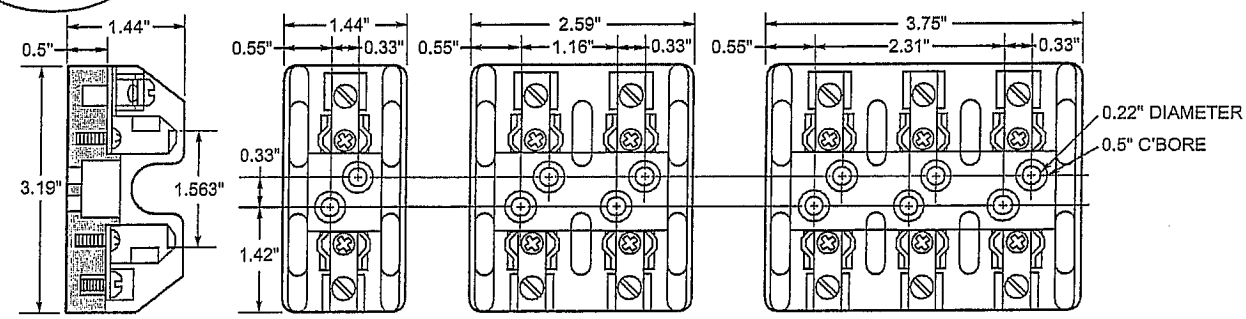

Figure 2. 31A to 60A

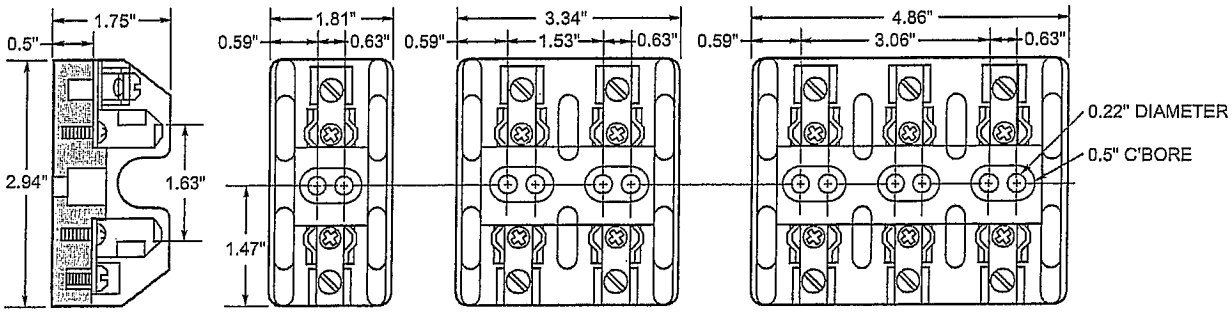

T-Tron® Very Fast-Acting Fuses

JJS

Class T — 600 Volt, 1 to 800 Amps

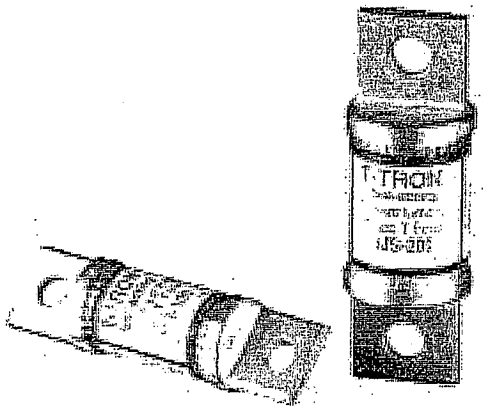

Catalog Symbol: JJS
Current-Limiting
Very Fast-Acting
Ampere Rating: 1 to 800A
Voltage Rating: 600Vac (or less)
Interrupting Rating: 200,000A RMS Sym.
Agency Information:
UL Listed, Std. 248-15, Class T, Guide JDDZ, File E4273
CSA Certified, C22.2 No. 248.15, Class 1422-02, File 53787

Catalog Numbers

JJS-1	JJS-45	JJS-200
JJS-2	JJS-50	JJS-225
JJS-3	JJS-60	JJS-250
JJS-6	JJS-70	JJS-300
JJS-10	JJS-80	JJS-350
JJS-15	JJS-90	JJS-400
JJS-20	JJS-100	JJS-450
JJS-25	JJS-110	JJS-500
JJS-30	JJS-125	JJS-600
JJS-35	JJS-150	JJS-800
JJS-40	JJS-175	—

See page 2 Of 2 for printed circuit board variations.

Carton Quantity and Weight

Catalog Number	Carton Qty.	Weight* Lbs.	Weight* Kg.
1–30	10	0.33	0.149
35–60	10	0.82	0.371
70–100	5	0.51	0.231
110–200	1	0.192	0.087
225–400	1	0.46	0.208
450–600	1	0.85	0.385
800	1	1.65	0.748

*Weight per carton.

Dimensional Data

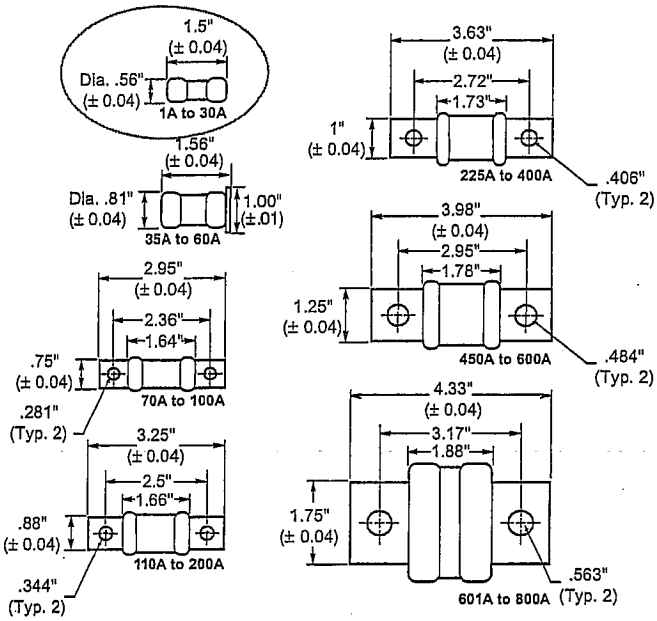

- Small, space-saving fuses provide a high degree of current-limitation on short-circuits for excellent component protection.
- Commonly applied in electric heat circuits, load center, disconnect switches, and meters.
- The small size of the T-Tron fuses permits installation in panelboards and control centers for system upgrading when existing circuit breakers cannot safely interrupt larger available short-circuit currents.
- High speed of response for semiconductor protection.
- Available for printed circuit board applications.

Recommended fuseblocks for Class T 600V fuses
See Data Sheet: 1116

CE logo denotes compliance with European Union Low Voltage Directive (50-1000Vac, 75-1500Vdc). Refer to Data Sheet: 8002 or contact Bussmann Application Engineering at 636-527-1270 for more information.

T-Tron® Very Fast-Acting Fuses

JJS

Class T — 600 Volt, 1 to 800 Amps

Current-Limitation Curves

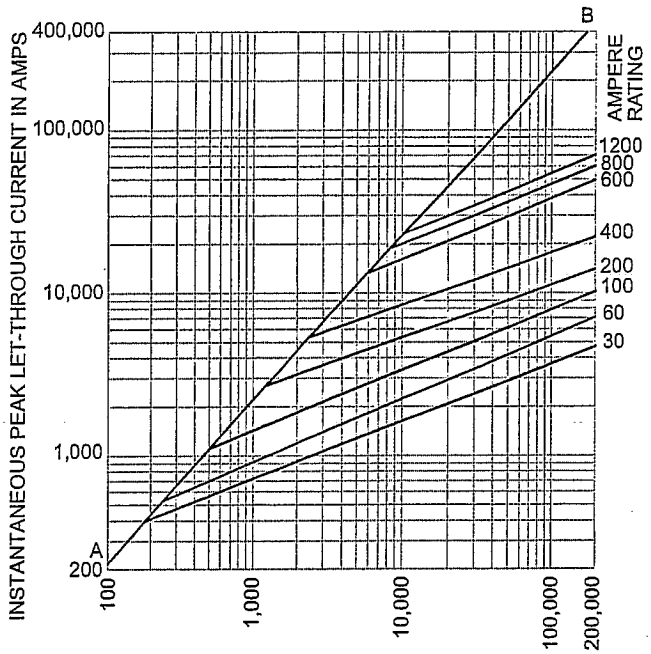

Time-Current Characteristic Curves–Average Melt

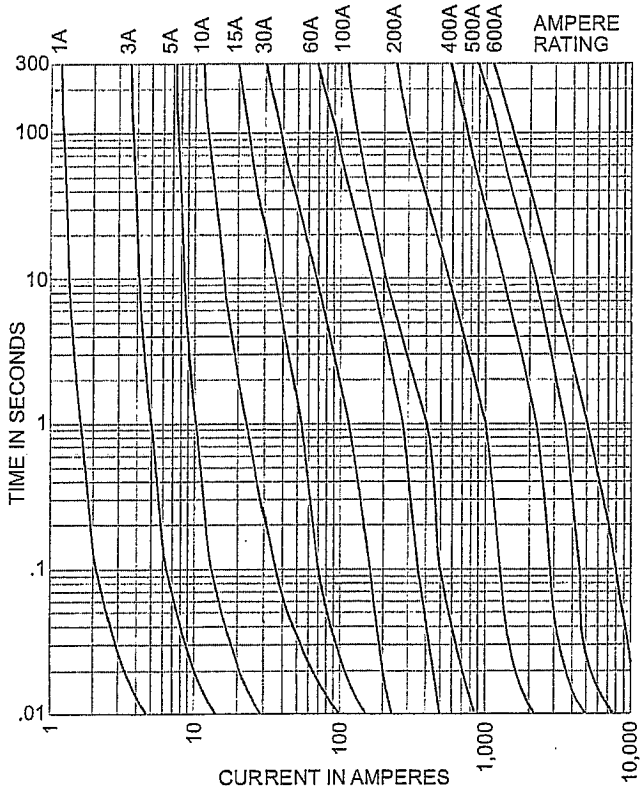

Custom Designs

- Printed circuit board variations available.

UL Component Recognized

File E56412, JFHR2, 600Vac, 200,000A IR

JJS-(1-30) V

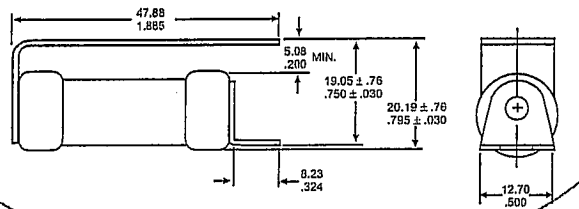

JJS-(35-60) V

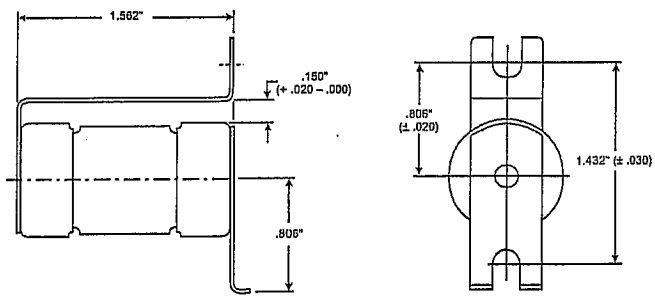

The only controlled copy of this Data Sheet is the electronic read-only version located on the Bussmann Network Drive. All other copies of this document are by definition uncontrolled. This bulletin is intended to clearly present comprehensive product data and provide technical information that will help the end user with design applications. Bussmann reserves the right, without notice, to change design or construction of any products and to discontinue or limit distribution of any products. Bussmann also reserves the right to change or update, without notice, any technical information contained in this bulletin. Once a product has been selected, it should be tested by the user in all possible applications.

ITC *Your Supplier of Quality Wiring Products*

SAFE MODULAR FUSE HOLDERS

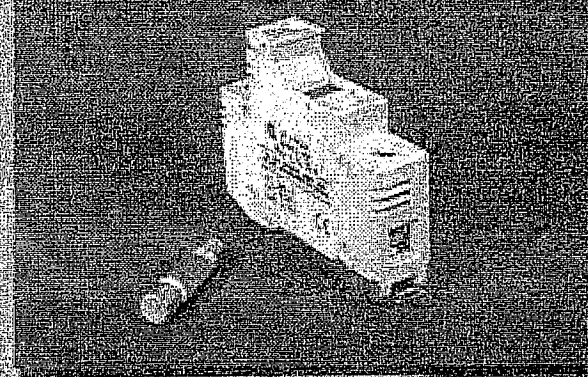

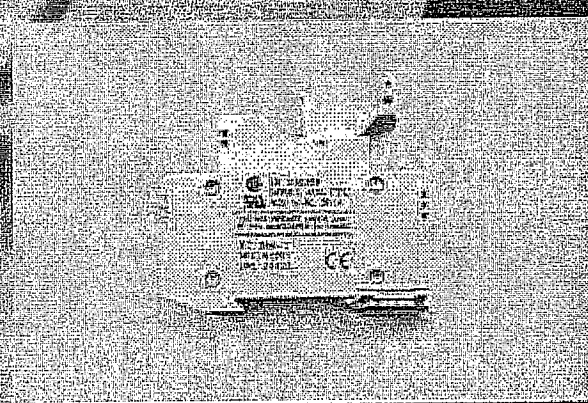

ITC

The dead front, modular disconnect fuseholders for "Midget" fuses by ITC provide safe operation as well as easy assembly, disassembly and replacement of the fuse

Safe Modular Fuse Holders

- **Safe operation:** with the fuse in as well as out, there is no possibility of the finger getting in contact with any live part.
- Certified 600 VAC, 30A max.
- Available either in **single, 2-, 3- or even 3-pole plus neutral** ganged construction.
- Accepts standard 13/32" x 1½" ("Midget" or 10.3x38mm) miniature fuses and "CC" fuses. No special tools are needed to remove or replace the fuse.
- Easily mounted on any **35 mm DIN Rail** along with terminal blocks, relays, contactors, PLCs, etc. The **unbreakable metal clamp** assures smooth assembly by hand, simply by snapping the fuseholder on the rail. Removal is equally simple, just using the tip of a flat screwdriver.
- Insulating body made of self-extinguishing, halogen-free **polyamide** (Nylon). Wide ventilation slots help dissipating the heat generated by the fuse, with the fuseholder installed in any position.
- **Small footprint:** thickness is only 11/16" (17.5 mm) and height just 2 3/8" (60 mm) over the rail. This means a significant economy of panel space, compared to open-type fuse bases.
- Wiring by compression clamp: maximum 10AWG (6 mm²) solid or stranded wire, or using a ferrule. Screw head accepts either a flat or a Phillips screwdriver.
- Construction according to European standard IEC 269-2.

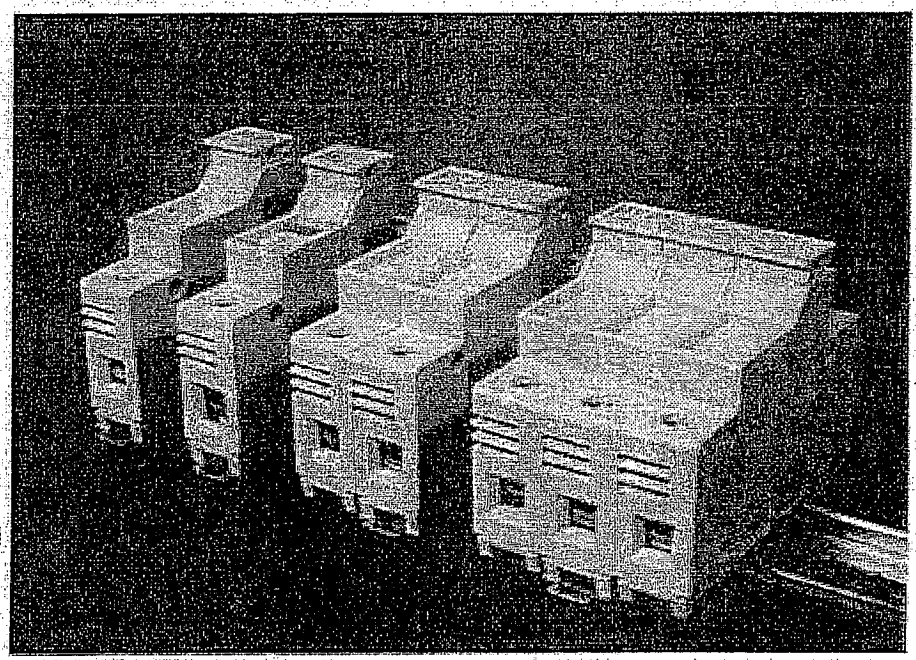

Available in three versions:

- **Without indicator of blown fuse;**
- **With flashing LED indicator of blown fuse (110-250 V)**
- **With neon indicator of blown fuse**

See the technical specifications on the following page.

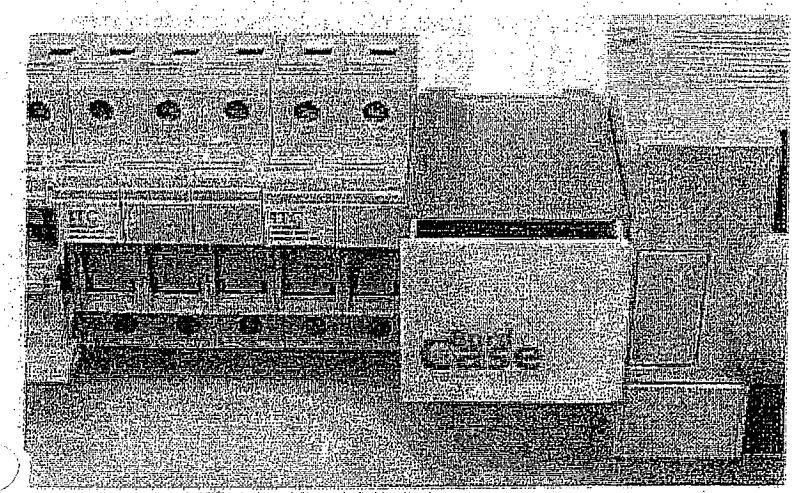

Accessories include:

- DIN Rail (standard 35 x 7.5 or heavy duty 35 x 15 mm) in bars 2 m or cut to length;
- DIN Rail mounting accessories (please request catalog)
- Dummy fuse links, to use the fuseholder as a disconnect switch;
- The exclusive "BORDCASE" ,, a convenient DIN rail mounted small box for handy storage of spare fuses and small parts.

ITC also offers from stock a complete assortment of high quality "Midget" fuses. See the selection table on the last page.

Technical specifications:

Rated Voltage (CSA,UL)	600V AC
Max. fuse rating (CSA, UL)	30A
Interrupting capacity	100,000A rms symmetric
Nominal wire section	10AWG (6mm²)
Nominal tightening torque	20 in lb.

Blown fuse indicator (approximate values):

	LED flashing models	NEON models
Operating voltage	~ 100 – 250 V AC	~100 – 250 V AC/DC
Leakage current at 120 VAC, load connected	~ 50 µA	~ 0.5 mA
Leakage current at 220 VAC, load connected	~ 125 µA	~ 0.6 mA
Leakage current at 120 VAC, load disconnected	~ 10 µA	n.a.
Leakage current at 220 VAC, load disconnected	~ 20 µA	n.a.
Flashing rate at 120 VAC, load connected	~ 100/min	n.a.
Flashing rate at 220 VAC, load connected	~ 150/min	n.a.
Flashing rate at 120 VAC, load disconnected	~ 20/min	n.a.
Flashing rate at 220 VAC, load disconnected	~ 40/min	n.a.

Dimensional Drawing:

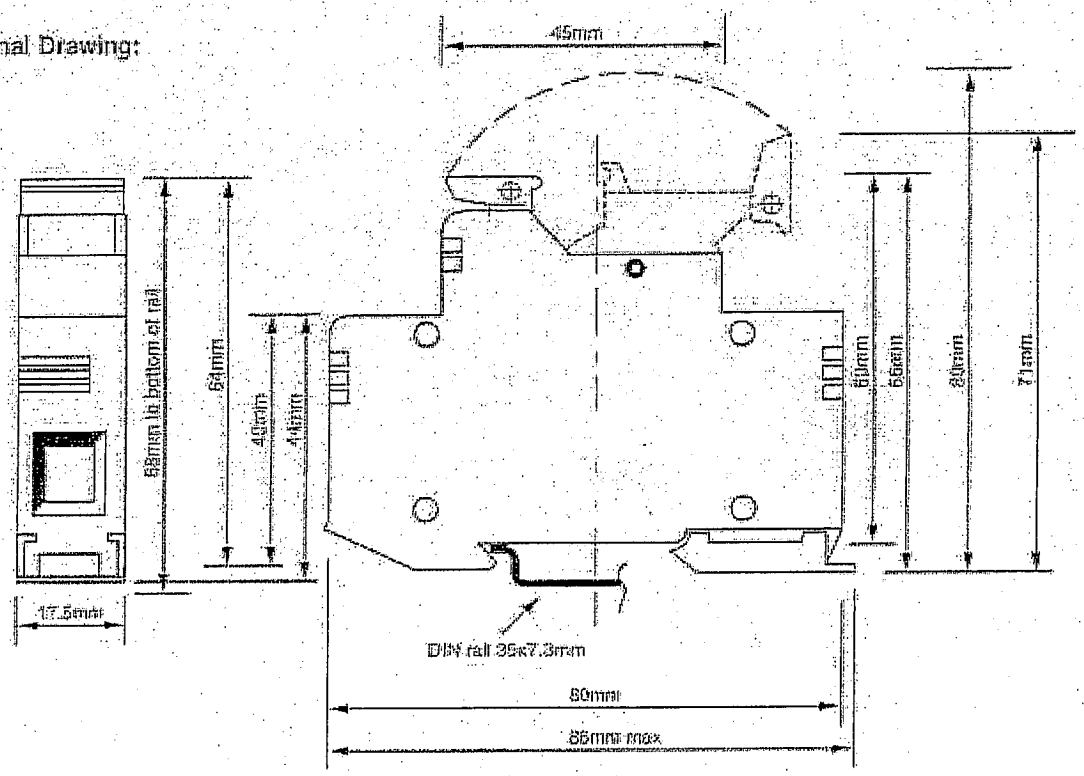

Overall dimensions:

Number of poles	Height incl. standard DIN Rail (35x7.5mm)	Height incl. heavy-duty DIN Rail (35x15mm)	Width (body)	Spacing
1-pole	68 mm (~2.7")	75.5 mm (~3")	80 mm (~3.15")	17.5 mm (11/16")
2-pole	68 mm (~2.7")	75.5 mm (~3")	80 mm (~3.15")	35 mm (1 3/8")
3-pole	68 mm (~2.7")	75.5 mm (~3")	80 mm (~3.15")	52.5 mm (2 1/16")
3-pole + neutral	68 mm (~2.7")	75.5 mm (~3")	80 mm (~3.15")	70 mm (2 3/4")

How to order:

Part No	Description	Model	Indicator	Weight (g)	Package (standard)	Package (bulk)
400.101	Single pole fuseholder	CF 120	No	61	10	100
400.102	2-pole fuseholder	CF 122	No	121	5	50
400.103	3-pole fuseholder	CF 123	No	179	3	30
400.104	3-pole + Neutral fuseholder	CF 124	No	239	2	20
400.111	Single pole fuseholder	CF 120 S	Flashing LED	62	10	100
400.112	2-pole fuseholder	CF 122 S	Flashing LED	123	5	50
400.113	3-pole fuseholder	CF 123 S	Flashing LED	180	3	30
400.131	Single pole fuseholder	CF 120 N	Neon	62	10	100
400.132	2-pole fuseholder	CF 122 N	Neon	123	5	50
400.133	3-pole fuseholder	CF 123 N	Neon	180	3	30

Midget fuses:

Interrupt capacity	100 kA	200 kA	10 kA	10 kA	50 kA	Package
Rated current	600 V fast acting CSA, UL	600 V class CC – rejection type CSA, UL	250 V fast acting CSA, UL	250 V slow-blow CSA, UL	500 V general purpose IEC	
1 A	450.001	450.501	450.201	450.101	450.301	10
2 A	450.002	450.502	450.202	450.102	450.302	10
3 A	450.003	450.503	450.203	450.103	n.a.	10
4 A	450.004	450.504	450.204	450.104	450.304	10
5 A	450.005	450.505	450.205	450.105	450.305	10
6 A	450.006	450.506	450.206	450.106	450.306	10
8 A	450.008	450.508	450.208	450.108	450.308	10
10 A	450.010	450.510	450.210	450.110	450.310	10
15 A	450.015	450.515	450.215	450.115	n.a.	10
16 A	n.a.	n.a.	n.a.	n.a.	450.316	10
20 A	450.020	450.520	450.220	450.120	450.320	10
25 A	450.025	450.525	450.225	450.125	450.325	10
30 A	450.030	450.530	450.230	450.130	n.a.	10
32 A	n.a.	n.a.	n.a.	n.a.	450.332	10

Accessories:

Part No	Description	Model	Dimensions	Weight (g)	Package (standard)	Package (bulk)
111.011	DIN Rail 35x7.5 mm, solid	TS35	2 m bar	~730 g/bar	100 m	400 m
111.013	DIN Rail 35x7.5 mm, punched	TS35 F6	2 m bar	~520 g/bar	40 m	400 m
111.025	DIN Rail 35x15 mm, punched	TS35 CF6	2 m bar	~1250 g/bar	20 m	200 m
111.901	End stop for DIN rail	BTU	8x 10 x 11 mm	60 g/pc	10	100
450.091	Dummy fuse link	IFD38	10x38 mm	50 g/pc	10	100
799.103	BOXDCASE utility box, green	-	55x25x75mm	45 g/pc	10	100
799.104	BOXDCASE utility box, black	-	55x25x75mm	45 g/pc	10	100
799.105	BOXDCASE utility box, blue	-	55x25x75mm	45 g/pc	10	100

JEB2018

ITC Your Supplier of Quality Wiring Products
89 Dolomite Dr., Toronto, ON M3J 2N1
Telephone: (416) 663-7223 Fax: (416) 663-7224
E-mail: itc@globalserve.net Website: www.itcproducts.com

Earth Tech (Canada) Inc.

Reviewed for general conformance with design intent. Responsibility for detailed design in the shop drawings rests with the Contractor.

Responsibility for verification and correlation of field dimensions, fabrication process, techniques of construction, installation and coordination of all parts of the work rests with the Contractor.

REVIEWED ✓

REVIEWED AS MODIFIED

REVISE AND RE-SUBMIT

NOT REVIEWED

Project No. C28/16/79538

Date: 12/9/06 By: M. Poulsen

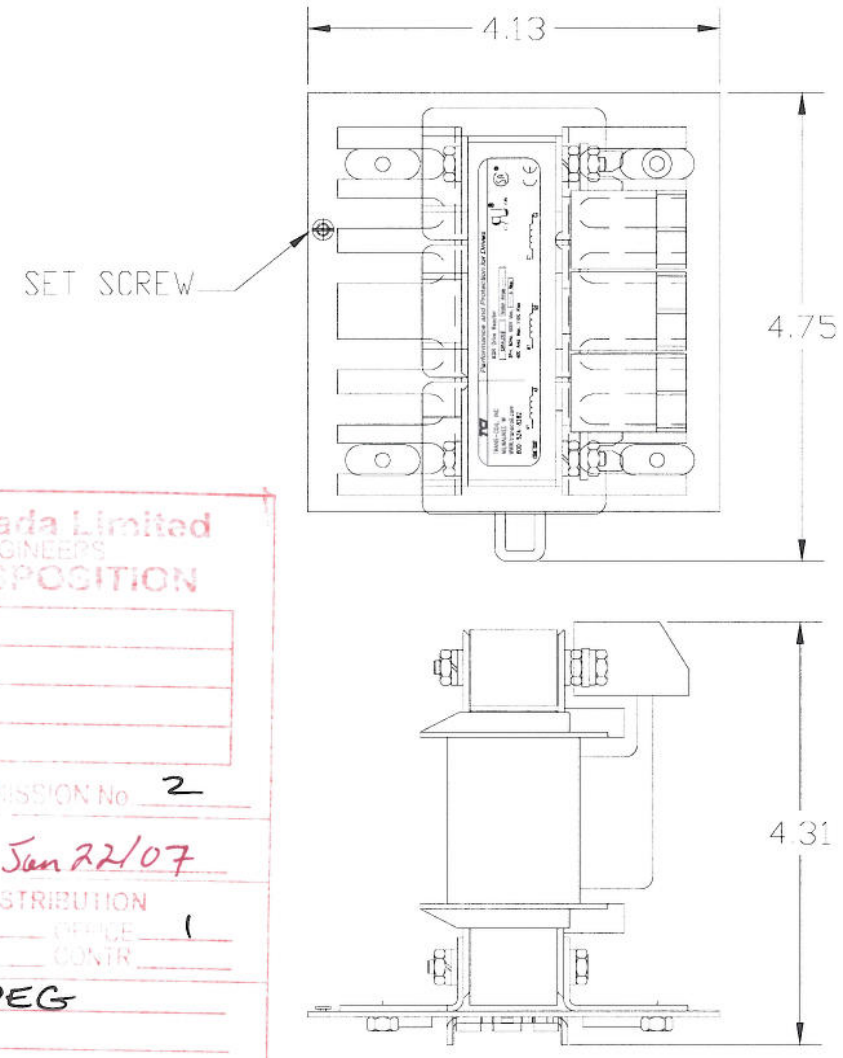

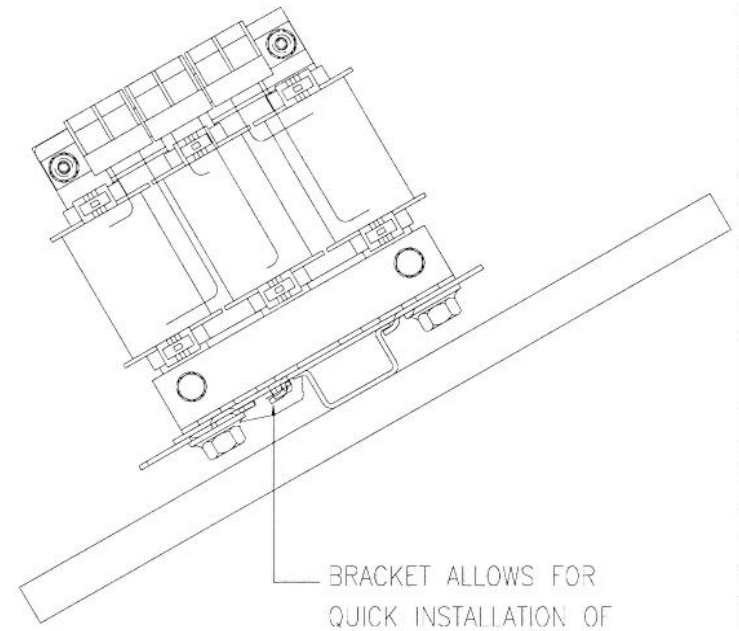

CATALOG NO	VOLTAGE	NEC MOTOR HP	NEC MOTOR CURRENT	WATTS LOSS	APPROX WEIGHT-LBS	TORQUE (LB-IN)
KDRA54LDR	208/240	0.5	2.40	7	4	10
KDRA53LDR	208/240	0.75	3.50	12	4	10
KDRA25LDR	208/240	1.0	4.60	11	4	10
KDRA26LDR	208/240	1.5	6.60	18	4	10
KDRA27LDR	208/240	2.0	7.50	21	4	10
KDRA28LDR	208/240	3.0	10.6	29	4	10
KDRA54HDR	208/240	0.5	2.40	14	4	10
KDRA53HDR	208/240	0.75	3.50	16.8	4	10
KDRA25HDR	208/240	1.0	4.60	23.6	4	10
KDRA27HDR	208/240	1.5	6.60	30.6	4	10
KDRA26HDR	208/240	2.0	7.50	30.5	4	10
KDRA28HDR	208/240	3.0	10.6	43.1	4	10
KDRA55LDR	575/600	0.5	0.90	6	4	10
KDRA56LDR	575/600	0.75	1.30	9.3	4	10
KDRA50LDR	575/600	1.0	1.70	12	4	10
KDRA51LDR	575/600	1.5	2.40	19	4	10
KDRA46LDR	575/600	2.0	2.70	22	4	10
KDRA52LDR	575/600	3.0	3.90	23.3	4	10
KDRA47LDR	575/600	5.0	6.10	34.7	4	10
KDRA48LDR	575/600	7.50	9.0	42.9	4	10
KDRA49LDR	575/600	10.0	11.0	43.8	5	10
KDRA55HDR	575/600	0.5	0.90	9	4	10
KDRA52HDR	575/600	0.75	1.30	13	4	10
KDRA50HDR	575/600	1.0	1.70	17	4	10
KDRA51HDR	575/600	1.5	2.40	26	4	10
KDRA43HDR	575/600	2.0	2.70	24	4	10
KDRA44HDR	575/600	3.0	3.90	35	4	10
KDRA45HDR	575/600	5.0	6.10	48	4	10

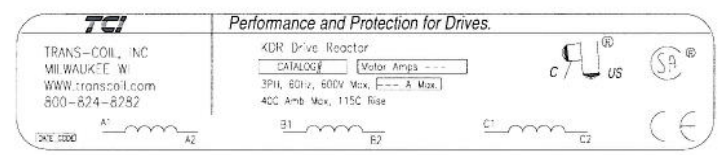

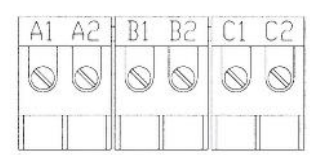

NOTE: A1, A2, B1, B2, C1, C2, ON TERMINAL BLOCK FOR REFERENCE ONLY.

NOTE 1: WATTS LOSS WILL VARY DUE TO FUNDAMENTAL FREQUENCY, CARRIER FREQUENCY AND OTHER SYSTEM CHARACTERISTICS.

KDR DRIVE REACTORS COMPLY WITH THE THERMAL AND ALTITUDE STANDARDS SET FORTH BY NEMA ST20-1992..

NEC MOTOR CURRENTS SHOWN IN THE 208/240 VOLT CHART ARE BASED ON HORSE POWERS AT 208 VOLT. 575/600 VOLT CHART USE THE 575 VOLT CURRENT RATING.

TCI'S DIN RAIL MOUNTED REACTORS FIT STANDARD 35mm DIN RAIL.
TCI'S MINIMUM RECOMMENDATION IS TO USE:
HIGH PROFILE STANDARD 35mm STEEL RAIL
OR HEAVY DUTY STANDARD 35mm STEEL RAIL.

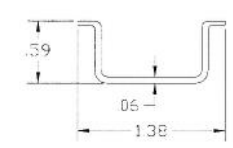

STANDARD STEEL HIGH PROFILE DIN RAIL

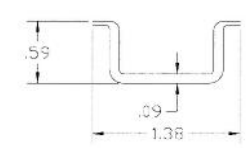

HEAVY DUTY STEEL DIN RAIL.

TCI RECOMMENDS TAKING PRECAUTIONS WHEN SHIPPING MOUNTED REACTORS

NOTE: CUSTOMER CAN CHANGE MOUNTED REACTOR, FROM VERTICAL TO HORIZONTAL ON DIN BRACKET.

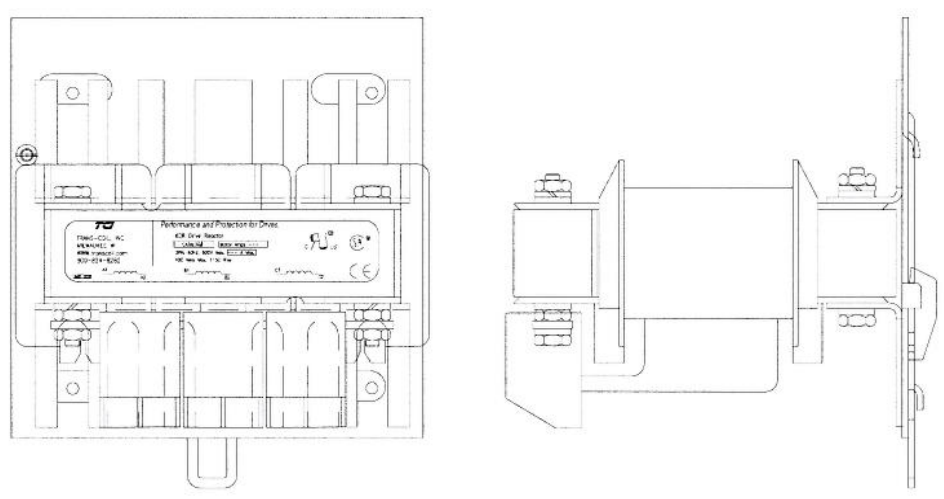

CH2M HILL Canada Limited
CONSULTING ENGINEERS
SUBMITTAL DISPOSITION
✓ REVIEWED
REVIEWED/MODIFIED
REVISE AND RE-SUBMIT
NOT REVIEWED
TCP No. 321352 SUBMISSION No. 2
Jan 22/07
DISTRIBUTION
11242 OFFICE 1
CONTR
LOCATION: WINNIPEG
SERVICE:
REFER TO CONTRACT SPECIFICATIONS FOR SUBMITTAL REQUIREMENTS
CH2M HILL Canada Limited's review of this submittal does not relieve the manufacturer of complete and exclusive responsibility for the design and manufacture of this product in conformity with specifications of this project.

Earth Tech (Canada) Inc.
Reviewed for general conformance with design intent. Responsibility for detailed design in the shop drawings rests with the Contractor.
Responsibility for verification and correlation of field dimensions, fabrication process, techniques of construction, installation and coordination of all parts of the work rests with the Contractor.
REVIEWED
REVISED AS MODIFIED
REVISE AND RE-SUBMIT
NOT REVIEWED
Project No.
Date By:

NO	REVISION	DATE	BY

TOLERANCES (EXCEPT AS NOTED)
DECIMAL .XX ± .03 .XXX ± .01
FRACTIONAL ± 1/32
ANGULAR ± 1/2°

TCI 7878 N. 86th STREET MILWAUKEE, WI 53224

KDR FRAME A
DIN RAIL MOUNTING

DRN BY DSW DATE 09/08/03
SCALE NONE APRVD
SIZE C DWG NO. KDRADR-2DG SHT. 1 OF 1

49-11242-15-R1
Winnipeg WTP

TCI

KDR™ Optimized Drive Reactors

Performance and Protection For Drives

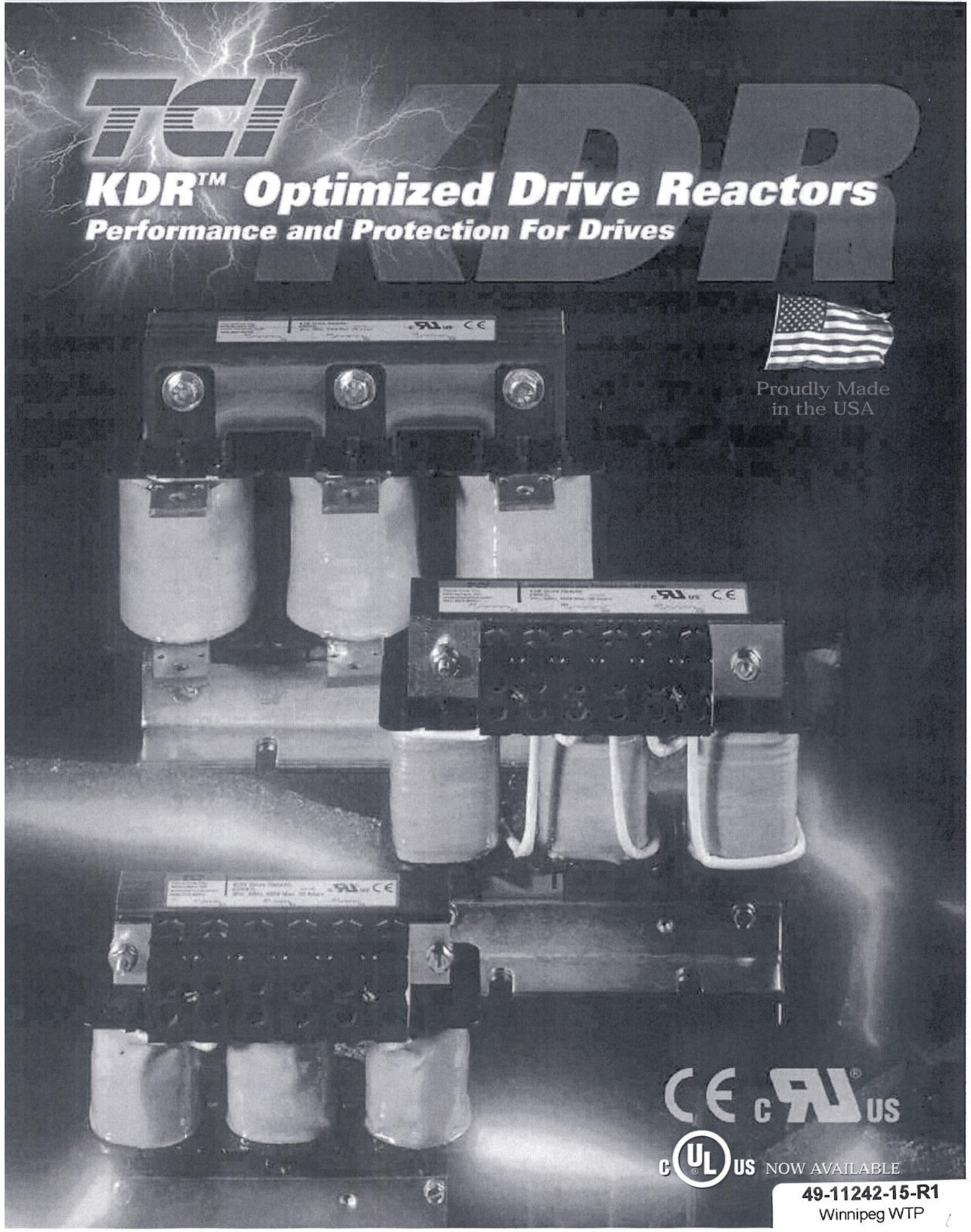

Proudly Made in the USA

NOW AVAILABLE

49-11242-15-R1
Winnipeg WTP

TCI's New KDR Optimized Drive Reactors Deliver Superior Design And Performance

Customers demand quality and performance at a price that translates to "optimum value". TCI, the drive industry's leading provider of value added technology, is proud to introduce the KDR Series of Optimized Drive Reactors. This is the latest addition to a family of reactor products with a reputation for increasing the value and improving the system performance of power inverters.

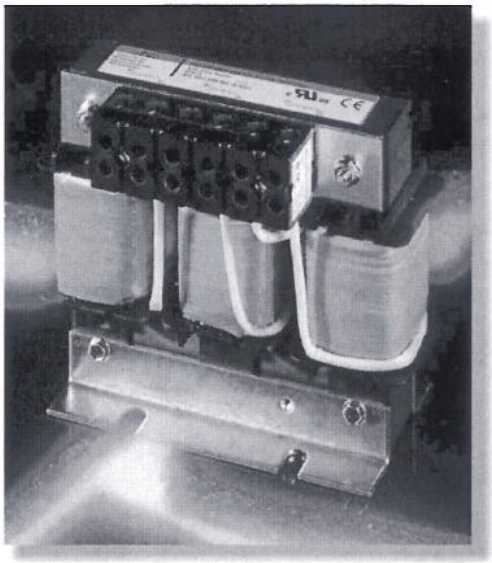

This KDR product has been designed to provide the same rugged reliability you've come to expect from TCI products in the smallest, lightest product package currently available in the market. Product models, covering the complete range of impedance needs, are available for either the line or load side of a PWM drive. Providing the optimum selection for your application, TCI's KDR Optimized Drive Reactors are your "Superior Design and Performance" solution.

KDR Optimized Drive Reactors are warranted against manufacturer's defect for the life of the drive with which they are installed.

Performance Guarantee

Properly sized for the application, a KDR reactor is guaranteed to eliminate any AC drive overvoltage tripping problems. If a KDR reactor is installed and the tripping problem remains, TCI will take back the reactor and pay shipping both ways. (Offer valid for 60 days from date of shipment.)

Drawings/Specifications

Autocad® compatible*.dxf drawings and Acrobat Reader® compatible*.pdf drawings of all KDR Optimized Drive Reactors are available at www.transcoil.com or by contacting TCI at (800) 824-8282.

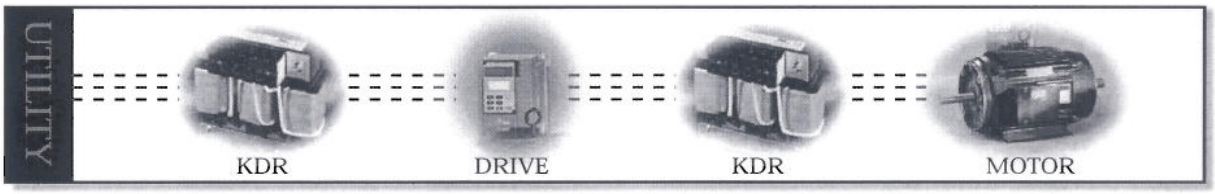

KDR At The Input Of The Drive

KDR Optimized Drive Reactors applied to the line side of a PWM drive will greatly improve the overall performance of the drive. The additional circuit inductance will reduce AC voltage waveform line notching, DC bus overvoltage trips, inverter overvoltage, poor total power factor, and cross-talk.

Typical Problems, Superior Solutions With KDR Reactors:

KDR On The Input to DC Drives

• Voltage line notching, also known as commutation notching, originates in SCR phase-controlled rectifiers. As the transfer of current takes place, there is a brief period of time where two SCRs connect during the switching process, causing a short between two of the AC lines. Additional impedance will reduce the depth and rounds the edges of the notches. This will eliminate drive cross-talk, interference, and equipment damage.

KDR On The Input to AC Drives

• Transient voltages, commonly caused by capacitor switching, or the switching of large load blocks, can result in an overvoltage condition of the DC bus. This overvoltage condition will cause the drive to shut down in order to protect its components. These transients can sometimes be very severe and too quick for the drive to shut down. The addition of a KDR Optimized Drive Reactor can prevent drive shutdown and even protect components from possible damage.

• Input line distortion is caused by the non-linear characteristics of drives. The addition of a KDR Optimized Drive Reactor will limit the inrush current to the rectifier, rounding the waveform, reducing the peak currents and lowering the harmonic current distortion. High peak currents may cause distortion of the voltage waveform. KDR's reduction of those peak currents also reduces total harmonic voltage distortion at the point of common coupling.

• Drive input currents rich in harmonics result in a decrease in total input power factor to the drive. The addition of a KDR Optimized Drive Reactor will reduce the RMS current through the reduction in harmonic content, thereby improving the total power factor.

• Input voltage unbalance may prevent the drive from performing due to subsequent overcurrent conditions which cause the drive to cease operating. Tests have proven that the addition of a KDR Drive Reactor to the input of every drive will help balance the drive input line currents.

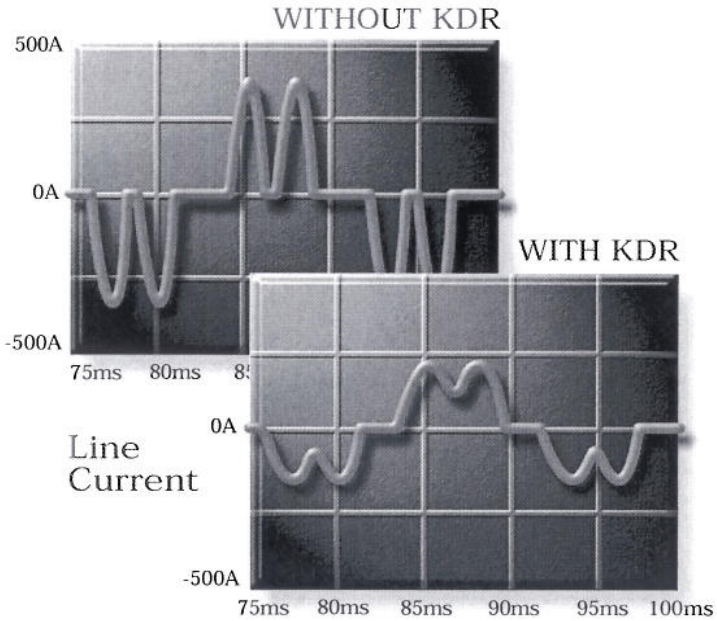

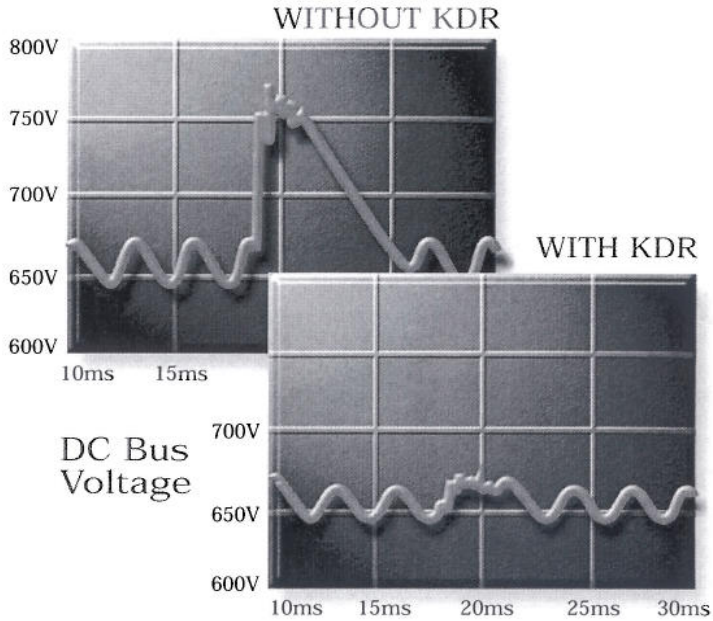

Two Rating Levels, Two Choices, One "Optimized" Answer...the new KDR

Choose TCI's new KDR Optimized Drive Reactors in two ratings versions, Low "Z" (low impedance) and High "Z" (high impedance). Input impedance can significantly improve drive performance; however, it should be noted that as impedance increases, the DC voltage on the VFD's capacitors actually decreases. This decrease can become significant enough to cause either an undervoltage trip or excessive motor current in the VFD. The KDR Optimized Drive Reactors have been designed to provide the best protection for both your drive and your application.

Use KDR Low "Z" Units For:

These units can be used in any applications where traditionally either a 1.5% or 3% reactor would be applied.

Reduction of nuisance tripping caused by:

- Transient voltages caused by capacitor switching
- Line notching
- DC bus overvoltage tripping
- Inverter overcurrent and overvoltage

Additional benefits include:

- Lowering injected percentage of harmonic current
- Improving true power factor
- Reducing cross-talk between drives

Use KDR High "Z" Units For:

These units can be used in any rugged application where traditionally a 5% reactor would be applied.

KDR High "Z" offers the same superior benefits as Low "Z" plus additional benefits which include:

- Helping prevent drive component damage
- Providing maximum harmonic mitigation without adding capacitance
- Further improving true power factor
- Adding impedance to drives with or without DC link chokes/reactors when more impedance is desired due to a relatively stiff source.

KDR Selection

TCI has compiled tables for each drive manufacturer by voltage and HP with the proper KDR selection noted for Low "Z" and High "Z" based on the manufacturer's nameplate input current rating. These charts also include convenient crossover tables between the popular TCI KLR series of reactors as well as crossovers for many other brands of reactors.

575 / 600 VOLTS LOW-Z

PART NUMBER	NEC MOTOR HP	NEC MOTOR CURRENT	WATTS LOSS	MINIMUM CAB SIZE	STANDARD TERMS	DIMENSIONS			WEIGHT	ENCLOSED PART NUMBER
						HEIGHT	WIDTH	DEPTH		
KDRA55L	0.5	0.9	6	C1	TB	4	4.18	3.75	4	KDRA55LC1
KDRA56L	0.75	1.3	9.3	C1	TB	4	4.18	3.75	4	KDRA56LC1
KDRA50L	1	1.7	12	C1	TB	4	4.18	3.75	4	KDRA50LC1
KDRA51L	1.5	2.4	19	C1	TB	4	4.18	3.75	4	KDRA51LC1
KDRA46L	2	2.7	22	C1	TB	4	4.18	3.75	4	KDRA46LC1
KDRA52L	3	3.9	23.3	C1	TB	4	4.18	3.75	4	KDRA52LC1
KDRA47L	5	6.1	34.7	C1	TB	4	4.18	3.75	4	KDRA47LC1
KDRA48L	7.5	9	42.9	C1	TB	4	4.18	3.75	4	KDRA48LC1
KDRA49L	10	11	43.8	C1	TB	4	4.18	3.75	5	KDRA49LC1
KDRB45L	15	17	66.2	C1	TB	5	6	4	8	KDRB45LC1
KDRB44L	20	22	71.2	C1	TB	5	6	4	8	KDRB44LC1
KDRB43L	25	27	76.7	C1	TB	5	6	4	8	KDRB43LC1
KDRD42L	30	32	106	C2	TB	5.75	7.2	4.25	12	KDRD42LC2
KDRC43L	40	41	109	C2	TB	5.75	7.2	5	15	KDRC43LC2
KDRC44L	50	52	123	C2	TB	5.75	7.2	5	15	KDRC44LC2
KDRF46L	60	62	181	C3	TB	7	9	6	30	KDRF46LC3
KDRF47L	75	77	194	C3	TB	7	9	6	30	KDRF47LC3
KDRF45L	100	99	194	C4	CB	7	9	6	30	KDRF45LC4
KDRH43L	125	125	261	C4	CB	9	11	7	45	KDRH43LC4
KDRH44L	150	144	253	C4	CB	9	11	7	45	KDRH44LC4
KDRI42L	200	192	342	C4	CB	9	11	7	50	KDRI42LC4
KDRG47L	250	242	394	C4	CB	9	11	8	65	KDRG47LC4
KDRG45L	300	289	374	C4	CB	9	11	8	65	KDRG45LC4
KDRJ45L	350	336	474	C5	CB	9	11	9	70	KDRJ45LC5
KDRJ43L	400	382	463	C5	CB	9	11	9	70	KDRJ43LC5
KDRJ44L	450	412	473	C5	CB	9	11	9	70	KDRJ44LC5
KDRL45L	500	472	587	C5	CB	11.38	15	11	110	KDRL45LC5
KDRL42L	600	576	716	C5	CB	11.38	15	11	150	KDRL42LC5
KDRL43L	700	672	836	C5	CB	11.38	15	11	270	KDRL43LC5
KDRL44L	800	768	955	C5	CB	11.38	15	11	275	KDRL44LC5
KDRX41L	900	864	1075	C7	CB	18.5	18.25	12.5	280	KDRX41LC7
KDRX42L	1000	960	1194	C7	CB	18.5	18.25	12.5	290	KDRX42LC7
KDRX43L	1100	1056	1313	C7	CB	18.5	18.25	12.5	315	KDRX43LC7
KDRX44L	1250	1200	1493	C7	CB	18.5	18.25	12.5	325	KDRX44LC7
KDRY41L	1500	1440	1791	C7	CB	20	21	16	465	KDRY41LC7

575 / 600 VOLTS HIGH-Z

PART NUMBER	NEC MOTOR HP	NEC MOTOR CURRENT	WATTS LOSS	MINIMUM CAB SIZE	STANDARD TERMS	DIMENSIONS			WEIGHT	ENCLOSED PART NUMBER
						HEIGHT	WIDTH	DEPTH		
KDRA55H	0.5	0.9	9	C1	TB	4	4.18	3.75	4	KDRA55HC1
KDRA52H	0.75	1.3	13	C1	TB	4	4.18	3.75	4	KDRA52HC1
KDRA50H	1	1.7	17	C1	TB	4	4.18	3.75	4	KDRA50HC1
KDRA51H	1.5	2.4	26	C1	TB	4	4.18	3.75	4	KDRA51HC1
KDRA43H	2	2.7	24	C1	TB	4	4.18	3.75	4	KDRA43HC1
KDRA44H	3	3.9	35	C1	TB	4	4.18	3.75	4	KDRA44HC1
KDRA45H	5	6.1	48	C1	TB	4	4.18	3.75	4	KDRA45HC1
KDRB42H	7.5	9	61	C2	TB	5	6	4	8	KDRB42HC2
KDRB43H	10	11	71	C2	TB	5	6	4	8	KDRB43HC2
KDRB44H	15	17	73	C2	TB	5	6	4	8	KDRB44HC2
KDRD41H	20	22	106	C2	TB	5.75	7.2	4.25	12	KDRD41HC2
KDRC43H	25	27	107	C2	TB	5.75	7.2	5	15	KDRC43HC2
KDRE42H	30	32	140	C2	TB	5.75	7.2	5	16	KDRE42HC2
KDRF44H	40	41	172	C3	TB	7	9	6	30	KDRF44HC3
KDRF45H	50	52	166	C3	TB	7	9	6	30	KDRF45HC3
KDRH43H	60	62	205	C4	TB	9	11	6	45	KDRH43HC4
KDRH42H	75	77	251	C4	TB	9	11	6	45	KDRH42HC4
KDRI41H	100	99	268	C4	CB	9	11	7	50	KDRI41HC4
KDRG44H	125	125	381	C4	CB	9	11	7.5	65	KDRG44HC4
KDRG45H	150	144	406	C4	CB	9	11	8	65	KDRG45HC4
KDRJ41H	200	192	466	C5	CB	9	11	9	70	KDRJ41HC5
KDRL46H	250	242	472	C5	CB	11.38	15	11	110	KDRL46HC5
KDRL47H	300	289	490	C5	CB	11.38	15	11	110	KDRL47HC5
KDRL48H	350	336	539	C5	CB	11.38	15	11	110	KDRL48HC5
KDRL49H	400	382	605	C5	CB	11.38	15	11	110	KDRL49HC5
KDRS47H	450	412	521	C5	CB	11.38	15	13	165	KDRS47HC5
KDRS46H	500	472	661	C5	CB	11.38	15	13	165	KDRS46HC5
KDRS49H	600	576	1194	C5	CB	11.38	15	13	175	KDRS49HC5
KDRS48H	700	672	1393	C5	CB	11.38	15	13	200	KDRS48HC5
KDRX44H	800	768	1592	C7	CB	18.5	18.25	12.5	280	KDRX44HC7
KDRX41H	900	864	1791	C7	CB	18.5	18.25	12.5	290	KDRX41HC7
KDRX42H	1000	960	1990	C7	CB	18.5	18.25	12.5	375	KDRX42HC7
KDRX43H	1100	1056	2189	C7	CB	18.5	18.25	12.5	450	KDRX43HC7
KDRY41H	1250	1200	2488	C7	CB	20	21	16	475	KDRY41HC7
KDRY42H	1500	1440	2985	C7	CB	20	21	16	575	KDRY42HC7

Watts Loss

The watts loss shown above are based on the effects of increased losses in both the core steel laminations and wire due to the presence of harmonic currents. Consideration of eddy currents in the watts loss calculation is important. The watt losses in the reactor core caused by eddy currents are proportional to the harmonic frequency squared. The harmonic current levels were derived from a typical 6 pulse converter as follows:

Harmonic	Current Distortion
5th	17%
7th	11%
11th	4.5%

Earth Tech (Canada) Inc.

Reviewed for general conformance with design intent. Responsibility for detailed design in the shop drawings rests with the Contractor.

Responsibility for verification and correlation of field dimensions, fabrication process, techniques of construction, installation and coordination of all parts of the work rests with the Contractor.

REVIEWED _____

REVIEWED AS MODIFIED _____

REVISE AND RE-SUBMIT _____

NOT REVIEWED _____

Project No. _____

Date: _____ By _____

CH2M HILL Canada Limited
CONSULTING ENGINEERS
SUBMITTAL DISPOSITION

	REVIEWED
✓	REVIEWED AS MODIFIED
	REVISE AND RE - SUBMIT
	NOT REVIEWED

JOB No. 321352 SUBMISSION No. 2

DATE
PER L Llewelly Jan 22/07

DISTRIBUTION

SPEC: 11242 RES. _____ OFFICE 1
ITEM: _____ CLIENT _____ CONTR _____

LOCATION: WINNIPEG

SERVICE: _____

REFER TO CONTRACT SPECIFICATIONS FOR SUBMITTAL REQUIREMENTS
CH2M HILL Canada Limited's review of this submittal does not relieve the manufacturer of complete and exclusive responsibility for the design and manufacture of this product in conformity with specifications of this project.

SEC. 15:
MASTER CONTROL PANEL

METCON
SALES & ENGINEERING LIMITED

Project Name: **CITY OF WINNIPEG-ONSITE HYPOCHLORITE GENERATION EQUIPMENT**
Project No: **06-ES5564**
Date: **August 2006**

SUBMITTAL DRAWINGS

Section 15

MASTER CONTROL PANEL

Drawings

Bill of Materials

Brochures and Catalogue Sheets

- Hoffman Enclosure
- Modicon Quantum Automation Platform
  - Presentation
  - Power Supply Modules
  - Unity Processors
  - Hot Standby System Unity Pro
  - Ethernet Modules
  - I/O Architectures
- Magelis Industrial PC
- InTouch Visualization Software
- Square D Disconnect Switches
- Sola Hevi-Duty Surge Protective Devices
- Telemecanique Manual Starters
- Schneider Contactors, Overload Relays
- Phoenix Contact Power Supply
- Schneider Circuit Breakers
- Weidmuller Converters
- Telemecanique Relays
- Telemecanique Terminal Blocks
- Bussmann Fuses
- Leviton GFCI Receptacles
- Square D Push Button
- Hoffman Lighting Packages

Prepared by: **Manco Controls**

Checked by: **Metcon**

PANEL LAYOUT

MASTER CONTROL PANEL

INSTALL A PERSPEX COVER OVER E-STOP SO THAT IT CANNOT BE OPERATED ACCIDENTALLY

PANEL SHOULD BE DESIGNED FOR TOP CABLE ENTRY.

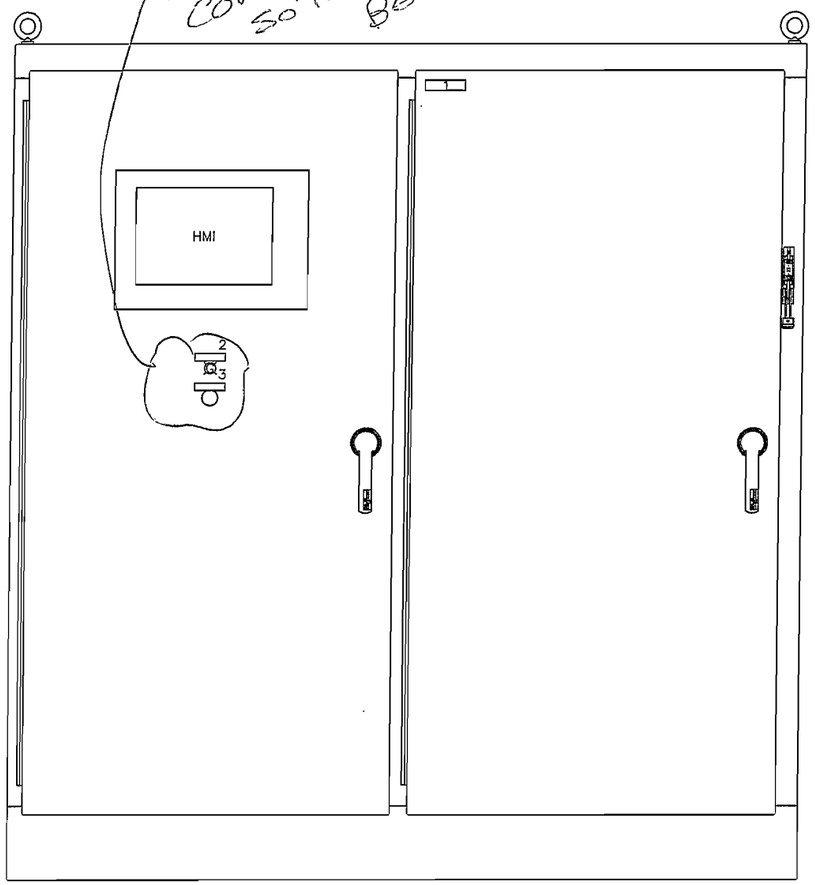

INTERIOR VIEW (DOOR OPEN)
ENCLOSURE IS NEMA 4X (STAINLESS STEEL)
DIM: 2134mmH x 1981mmW x 457mmD

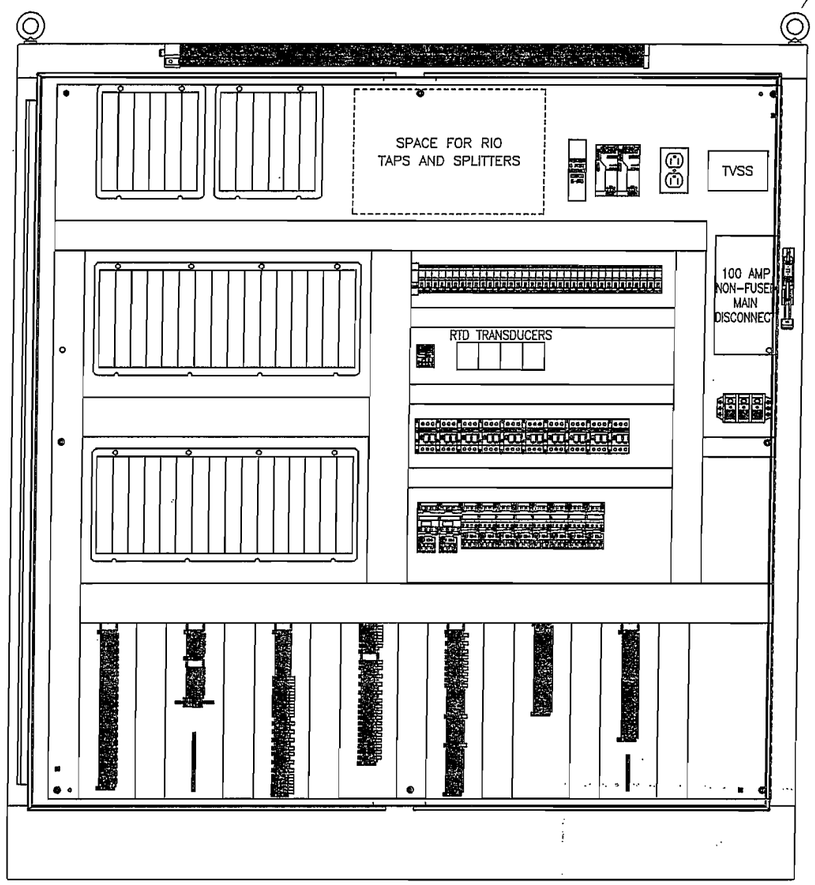

INTERIOR VIEW (DOOR OPEN)
ENCLOSURE IS NEMA 4X (STAINLESS STEEL)
DIM: 2134mmH x 1981mmW x 457mmD

LAMACOID LIST:

1 – SODIUM HYPOCHLORITE/MASTER CONTROL PANEL
2 – POWER ON
3 – EMERGENCY STOP

NOTE: MULLION REMOVED FROM INTERIOR LAYOUT FOR CLARITY

PROVINCE OF MANITOBA
Robert Kost
R.C.P
KOST
August 22/06
REGISTERED PROFESSIONAL ENGINEER

MCSI MANCO CONTROL SYSTEMS INC.

METCON SALES & ENGINEERING LIMITED

DATE	DESCRIPTION	BY	REV.
08/21/06	ISSUED FOR APPROVALS	C.S.	01

Winnipeg

THE CITY OF WINNIPEG
WATER TREATMENT PLANT
SODIUM HYPOCHLORITE
GENERATING SYSTEM

MASTER CONTROL PANEL
LAYOUT

SCALE NTS
DATE 07/25/06
DES CTS DWN CTS
CKD CKD APP APP

DRAWING NO.
M5472-01

Saved by C. SCHACHT 08-17-06 13:22

Earth Tech (Canada) Inc.

Reviewed for general conformance with design intent. Responsibility for detailed design in the shop drawings rests with the Contractor.

Responsibility for verification and correlation of field dimensions, fabrication process, techniques of construction, installation and coordination of all parts of the work rests with the Contractor.

REVIEWED _____

REVIEWED AS MODIFIED ✓

REVISE AND RE-SUBMIT _____

NOT REVIEWED _____

Project No. C28/16/79538

Date: 14/9/06 By: [signature]

SYSTEM ARCHITECTURE DIAGRAM

MASTER CONTROL PANEL

WOULD IT BE POSSIBLE TO EXPAND THIS SWITCH AND INCLUDE ETHERNET CONNECTION TO VFD'S FOR DOSING PUMPS

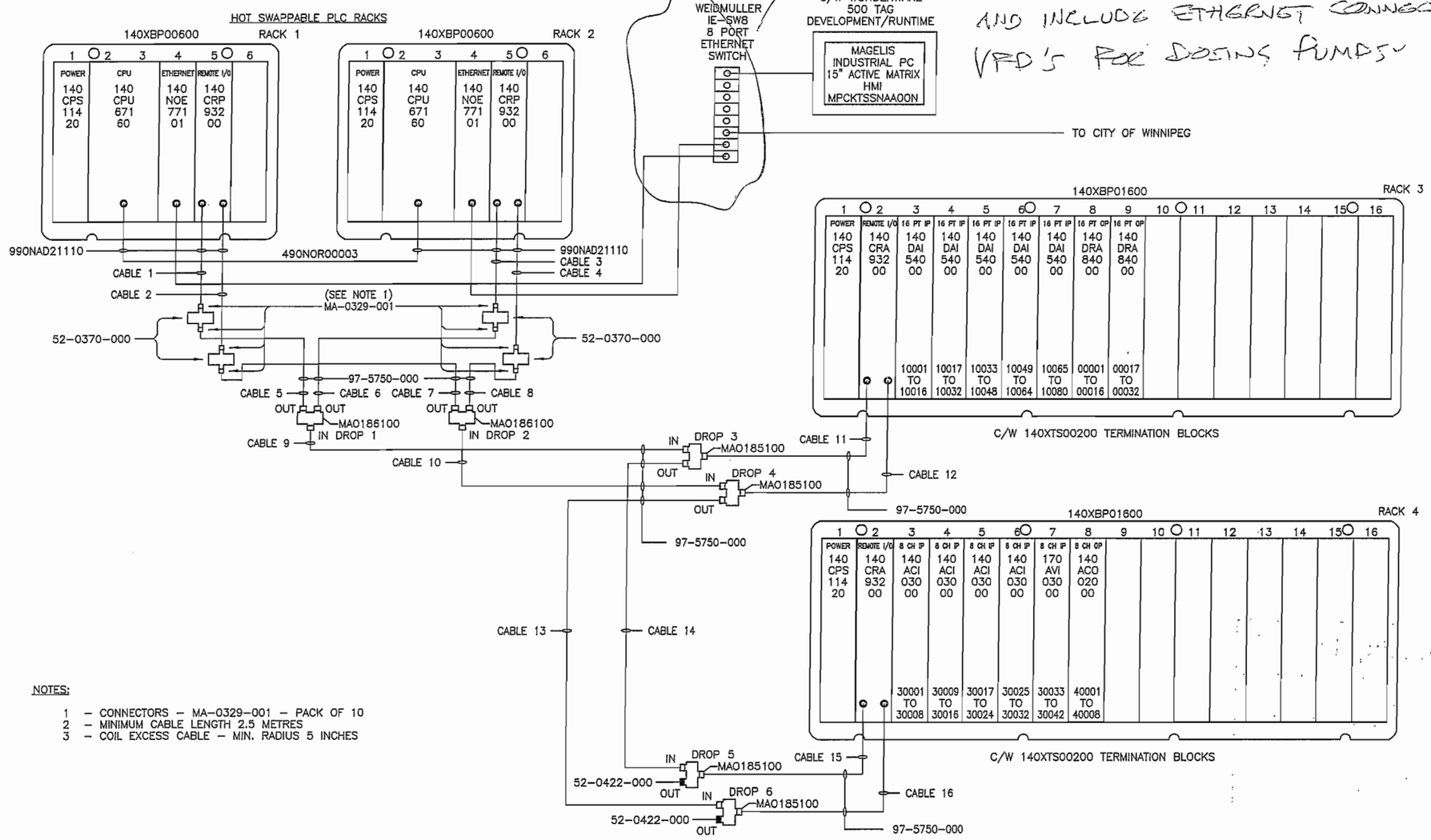

NOTES:

1 – CONNECTORS – MA-0329-001 – PACK OF 10
2 – MINIMUM CABLE LENGTH 2.5 METRES
3 – COIL EXCESS CABLE – MIN. RADIUS 5 INCHES

NOTE:

PROVINCE OF MANITOBA
R.C.P KOST
08/22/06
REGISTERED PROFESSIONAL ENGINEER

MANCO CONTROL SYSTEMS INC.

METCON SALES & ENGINEERING LIMITED

DATE	DESCRIPTION	BY	REV.
08/21/06	ISSUED FOR APPROVALS	C.S.	01

Winnipeg

THE CITY OF WINNIPEG
WATER TREATMENT PLANT
SODIUM HYPOCHLORITE GENERATING SYSTEM

MASTER CONTROL PANEL
SYSTEM ARCHITECTURE

SCALE NTS
DATE 07/25/06
DES CTS DWN CTS
CKD CKD APP APP

DRAWING NO.
M5472-02

Saved by C. SCHACHT 08-15-06 13:52

Earth Tech (Canada) Inc.

Reviewed for general conformance with design intent. Responsibility for detailed design in the shop drawings rests with the Contractor.

Responsibility for verification and correlation of field dimensions, fabrication process, techniques of construction, installation and coordination of all parts of the work rests with the Contractor.

REVIEWED _____

REVIEWED AS MODIFIED ✓

REVISE AND RE-SUBMIT _____

NOT REVIEWED _____

Project No. C28/16/79538

Date: 14/9/06 By: M. Foulson

CONTROL WIRING DIAGRAM

FIELD | MASTER CONTROL PANEL

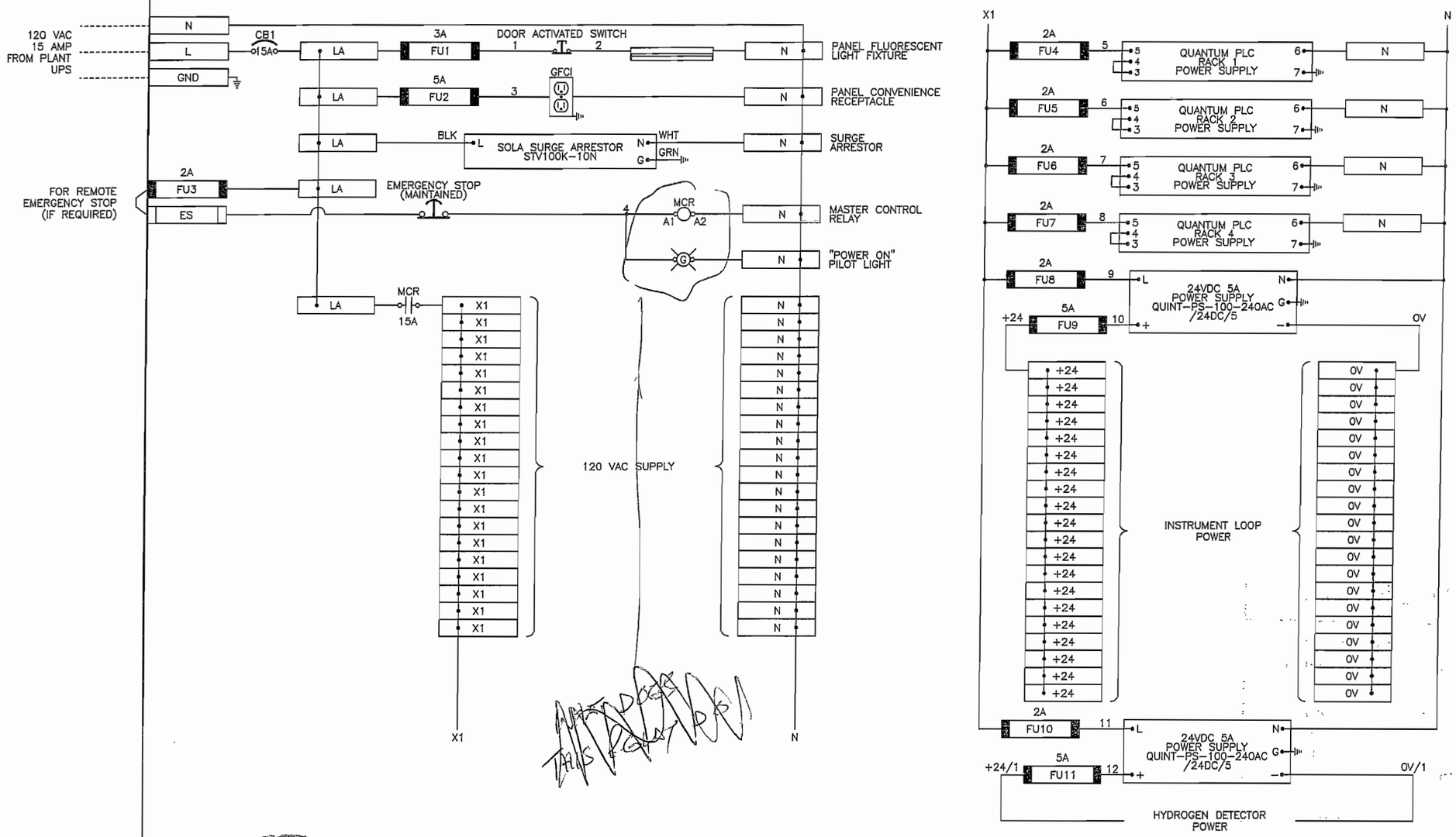

NOTE:

XXA
XXXX – DENOTES FUSED DISCONNECT TERMINAL BLOCK

XXXX – DENOTES DISCONNECT TERMINAL BLOCK

XXXX – DENOTES STRAIGHT THRU TERMINAL BLOCK

PROVINCE OF MANITOBA
R.C.P KOST
08/22/06
REGISTERED PROFESSIONAL ENGINEER

MANCO CONTROL SYSTEMS INC.

METCON SALES & ENGINEERING LIMITED

DATE	DESCRIPTION	BY	REV.
08/21/06	ISSUED FOR APPROVALS	C.S.	01

Winnipeg

THE CITY OF WINNIPEG
WATER TREATMENT PLANT
SODIUM HYPOCHLORITE GENERATING SYSTEM

MASTER CONTROL PANEL
CONTROL WIRING DIAGRAM

SCALE NTS
DATE 07/25/06
DES CTS DWN CTS
CKD CKD APP APP

DRAWING NO.
M5472-03

Saved by C. SCHACHT 08-21-06 12:47

Earth Tech (Canada) Inc.

Reviewed for general conformance with design intent. Responsibility for detailed design in the shop drawings rests with the Contractor.

Responsibility for verification and correlation of field dimensions, fabrication process, techniques of construction, installation and coordination of all parts of the work rests with the Contractor.

REVIEWED ✓

REVIEWED AS MODIFIED

REVISE AND RE-SUBMIT

NOT REVIEWED

Project No. C28/16/79538

Date: 14/9/06 By: M. Toulson

POWER WIRING DIAGRAM

MASTER CONTROL PANEL

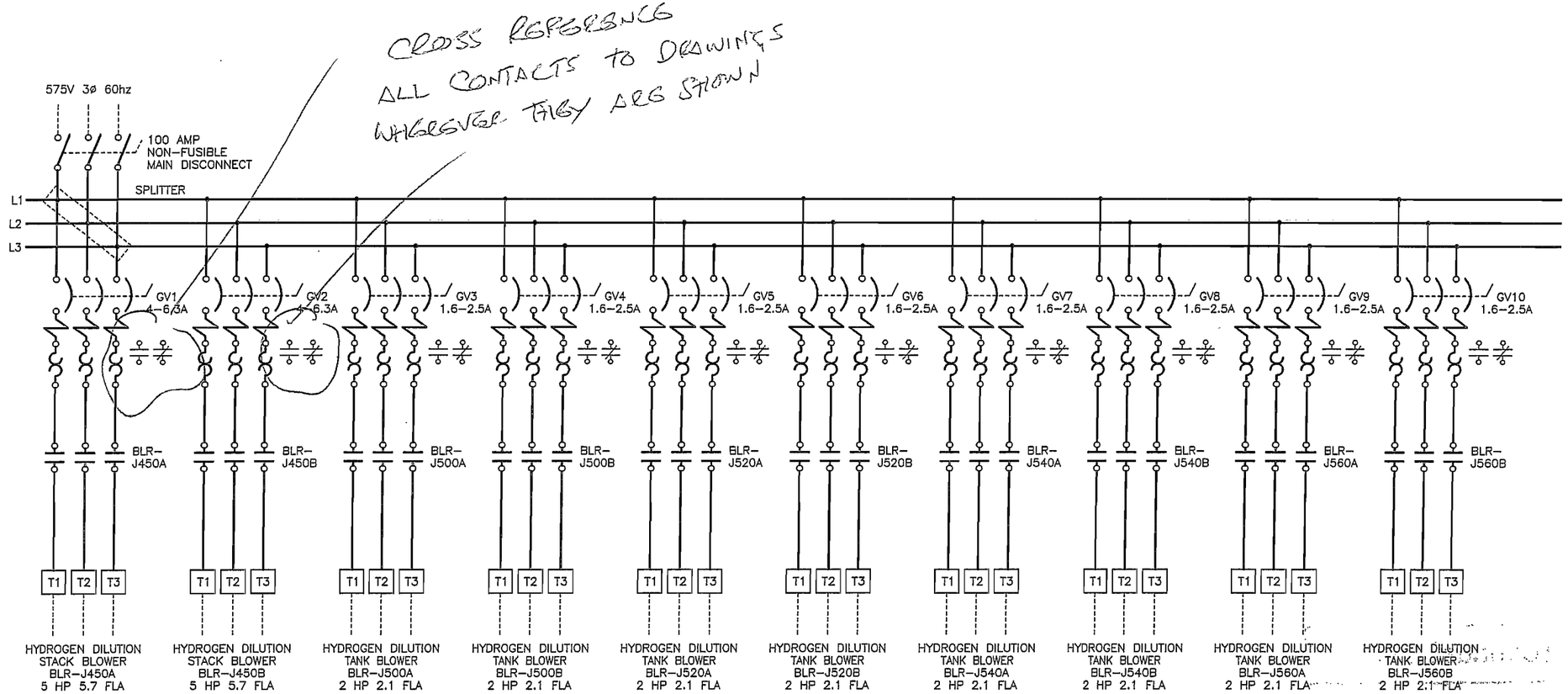

NOTE:

PROVINCE OF MANITOBA
R.C.P KOST
08/22/06
REGISTERED PROFESSIONAL ENGINEER

MANCO CONTROL SYSTEMS INC.

METCON SALES & ENGINEERING LIMITED

DATE	DESCRIPTION	BY	REV.
08/21/06	ISSUED FOR APPROVALS	C.S.	01

Winnipeg

THE CITY OF WINNIPEG
WATER TREATMENT PLANT
SODIUM HYPOCHLORITE GENERATING SYSTEM

MASTER CONTROL PANEL
POWER WIRING DIAGRAM

SCALE NTS
DATE 07/27/06
DES CTS DWN CTS
CKD CKD APP APP

DRAWING NO.
M5472-04

Saved by C. SCHACHT 08-21-06 14:49

Earth Tech (Canada) Inc.

Reviewed for general conformance with design intent. Responsibility for detailed design in the shop drawings rests with the Contractor.

Responsibility for verification and correlation of field dimensions, fabrication process, techniques of construction, installation and coordination of all parts of the work rests with the Contractor.

REVIEWED _____

REVIEWED AS MODIFIED ✓

REVISE AND RE-SUBMIT _____

NOT REVIEWED _____

Project No. C28/16/79538

Date: _____ By: _____

INSTRUMENT LOOP DIAGRAM

LOOP NO. J001B

FIELD	MASTER CONTROL PANEL	PLC

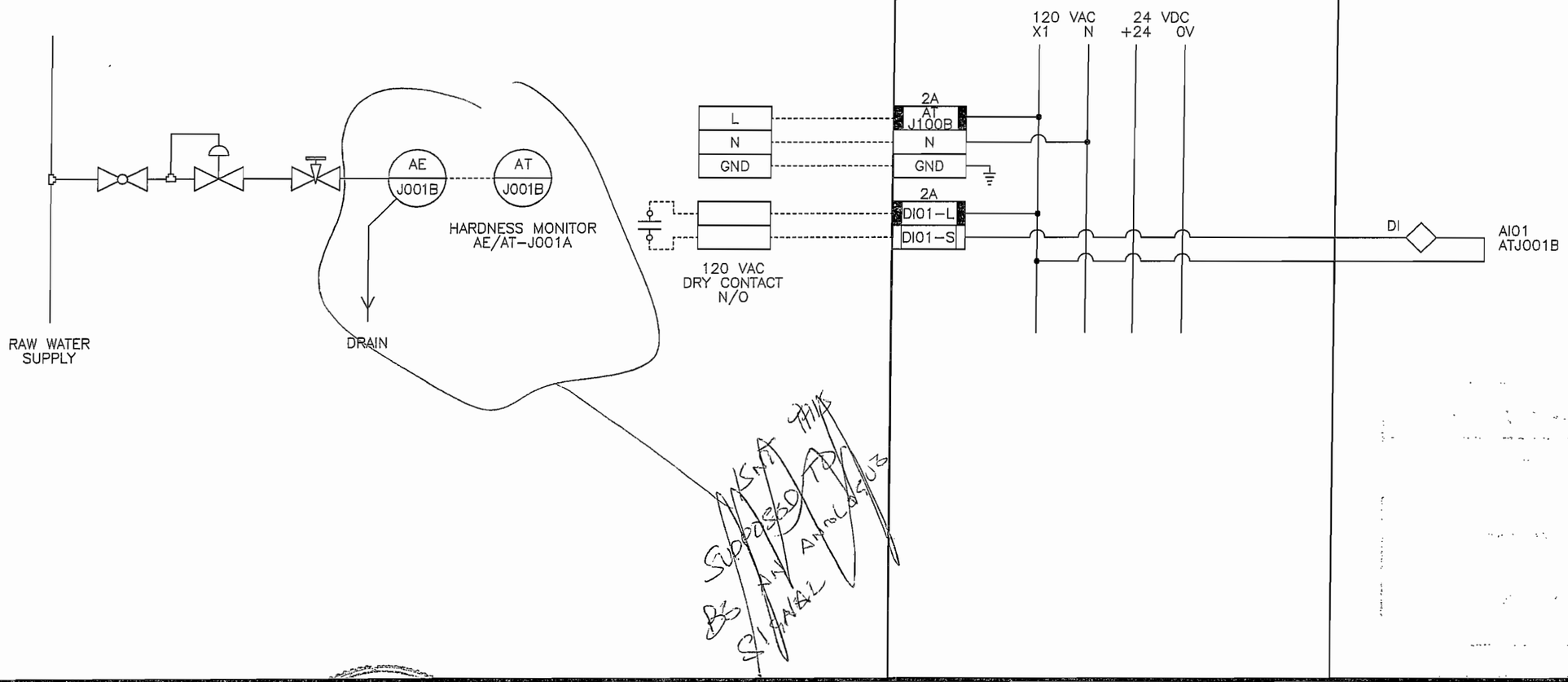

NOTE:

PROVINCE OF MANITOBA
R.C.P
KOST
08/22/06
REGISTERED PROFESSIONAL ENGINEER

MANCO CONTROL SYSTEMS INC.

METCON SALES & ENGINEERING LIMITED

DATE	DESCRIPTION	BY	REV.
08/21/06	ISSUED FOR APPROVALS	C.S.	01

Winnipeg

THE CITY OF WINNIPEG
WATER TREATMENT PLANT
SODIUM HYPOCHLORITE
GENERATING SYSTEM

WATER HARDNESS MONITOR ATJ001B
RAW WATER SUPPLY

SCALE NTS
DATE 07/31/06
DES CTS DWN CTS
CKD CKD APP APP

DRAWING NO.
M5472-05

Saved by C. SCHACHT 08-21-06 14:11

Earth Tech (Canada) Inc.

Reviewed for general conformance with design intent. Responsibility for detailed design in the shop drawings rests with the Contractor.

Responsibility for verification and correlation of field dimensions, fabrication process, techniques of construction, installation and coordination of all parts of the work rests with the Contractor.

REVIEWED ✓

REVIEWED AS MODIFIED

REVISE AND RE-SUBMIT

NOT REVIEWED

Project No. C28/16/79538

Date: 14/9/06 By: M. Toole

INSTRUMENT LOOP DIAGRAM

LOOP NO. J001A

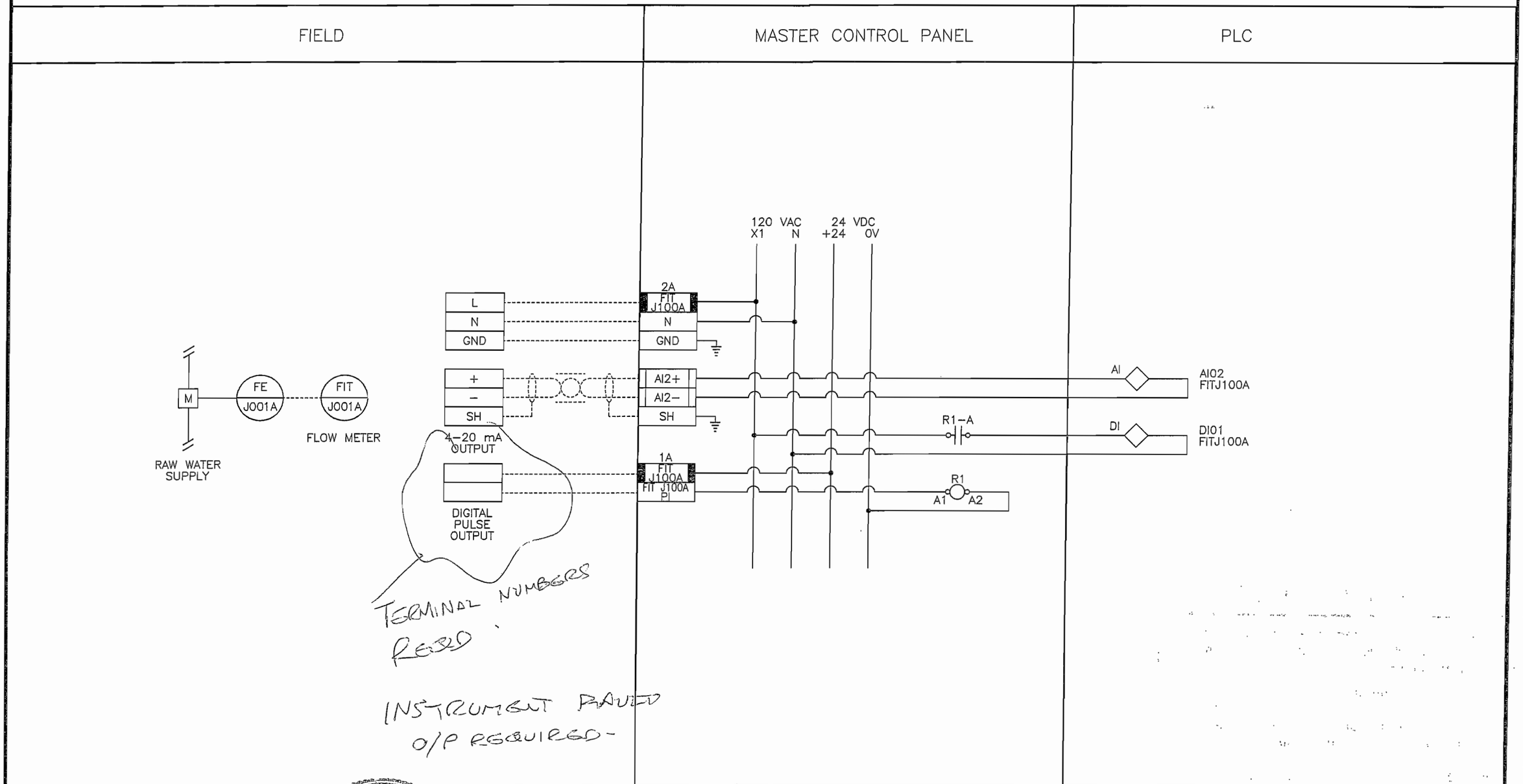

NOTE:

PROVINCE OF MANITOBA
R.C.P KOST
08/22/06
REGISTERED PROFESSIONAL ENGINEER

MANCO CONTROL SYSTEMS INC.

METCON SALES & ENGINEERING LIMITED

DATE	DESCRIPTION	BY	REV.
08/21/06	ISSUED FOR APPROVALS	C.S.	01

Winnipeg

THE CITY OF WINNIPEG
WATER TREATMENT PLANT
SODIUM HYPOCHLORITE
GENERATING SYSTEM

FLOW METER FITJ001A
RAW WATER SUPPLY

SCALE NTS
DATE 07/31/06
DES CTS DWN CTS
CKD CKD APP APP

DRAWING NO.
M5472–06

Saved by C. SCHACHT 08–21–06 14:51

Earth Tech (Canada) Inc.

Reviewed for general conformance with design intent. Responsibility for detailed design in the shop drawings rests with the Contractor.

Responsibility for verification and correlation of field dimensions, fabrication process, techniques of construction, installation and coordination of all parts of the work rests with the Contractor.

REVIEWED _____

REVIEWED AS MODIFIED ✓

REVISE AND RE-SUBMIT _____

NOT REVIEWED _____

Project No. C28/16/79538

Date: 14/9/06 By: M. Foulsom

INSTRUMENT LOOP DIAGRAM

LOOP NO. J100A

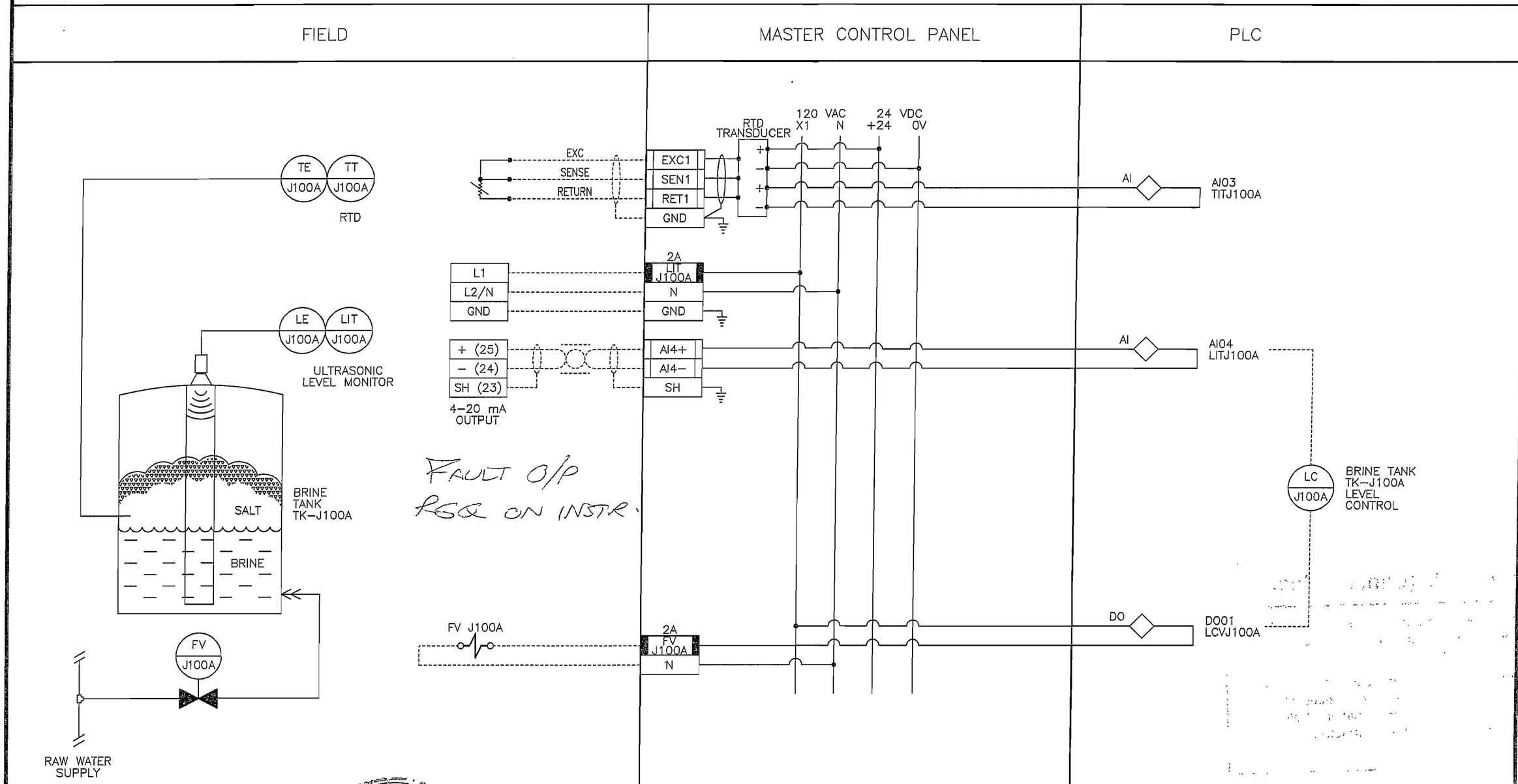

NOTE:

PROVINCE OF MANITOBA
R.C.P KOST
08/22/06
REGISTERED PROFESSIONAL ENGINEER

MANCO CONTROL SYSTEMS INC.

METCON SALES & ENGINEERING LIMITED

DATE	DESCRIPTION	BY	REV.
08/21/06	ISSUED FOR APPROVALS	C.S.	01

Winnipeg

THE CITY OF WINNIPEG
WATER TREATMENT PLANT
SODIUM HYPOCHLORITE GENERATING SYSTEM

BRINE LEVEL CONTROL LCJ100A
BRINE TANK TK–J100A

SCALE NTS
DATE 07/31/06
DES CTS DWN CTS
CKD CKD APP APP

DRAWING NO.
M5472–07

Saved by C. SCHACHT 08–21–06 14:51

Earth Tech (Canada) Inc.

Reviewed for general conformance with design intent. Responsibility for detailed design in the shop drawings rests with the Contractor.

Responsibility for verification and correlation of field dimensions, fabrication process, techniques of construction, installation and coordination of all parts of the work rests with the Contractor.

REVIEWED _____

REVIEWED AS MODIFIED ✓

REVISE AND RE-SUBMIT _____

NOT REVIEWED _____

Project No. C28/16/79538

Date: 14/9/06 By: N. Joulson

INSTRUMENT LOOP DIAGRAM

LOOP NO. J100B

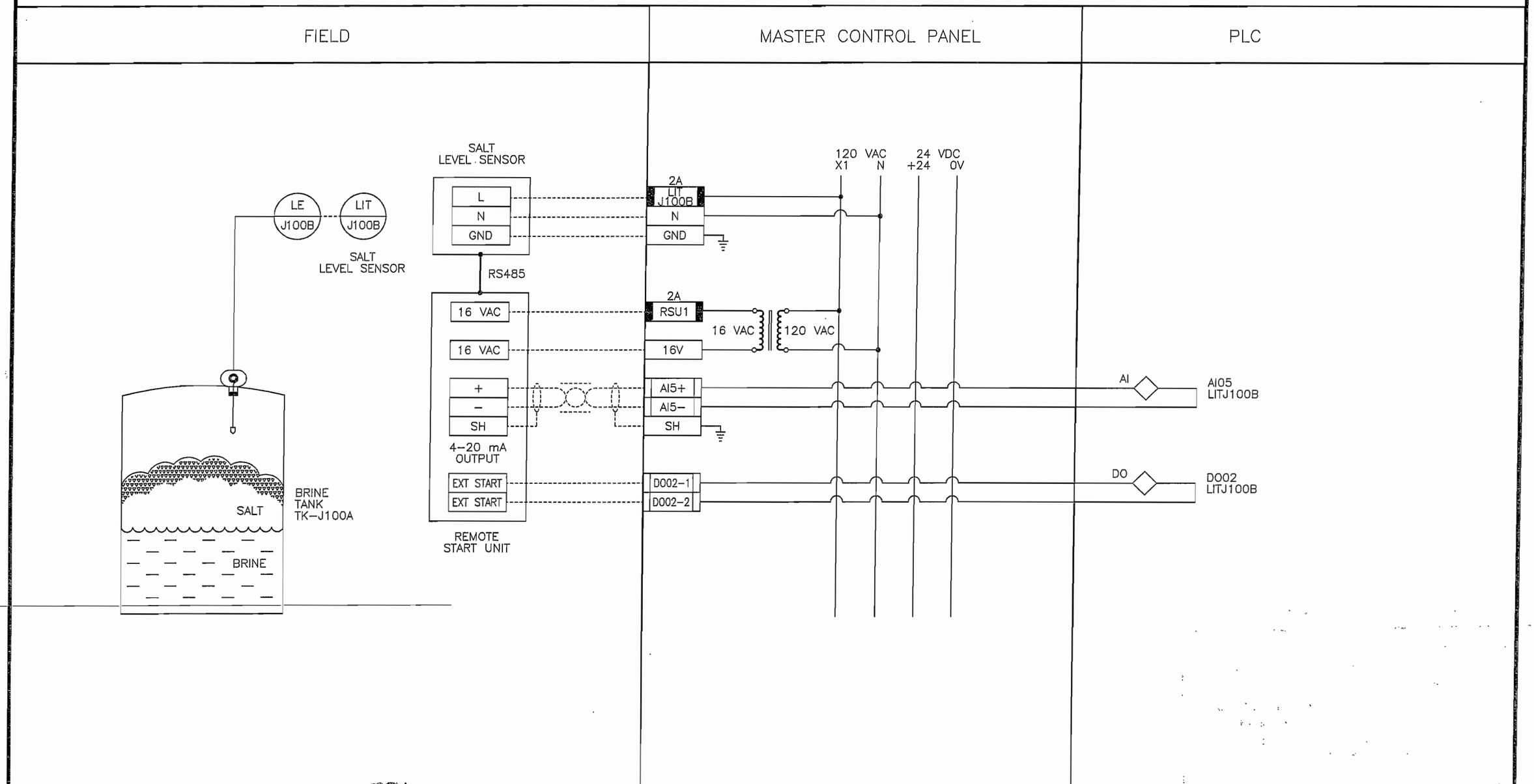

NOTE:

PROVINCE OF MANITOBA
R.C.P KOST
08/22/06
REGISTERED PROFESSIONAL ENGINEER

MANCO CONTROL SYSTEMS INC.

METCON SALES & ENGINEERING LIMITED

DATE	DESCRIPTION	BY	REV.
08/21/06	ISSUED FOR APPROVALS	C.S.	01

Winnipeg

THE CITY OF WINNIPEG

WATER TREATMENT PLANT

SODIUM HYPOCHLORITE GENERATING SYSTEM

SALT LEVEL SENSOR LITJ100B
BRINE TANK TK–J100A

SCALE NTS
DATE 07/31/06
DES CTS DWN CTS
CKD CKD APP APP

DRAWING NO.
M5472–08

Saved by C. SCHACHT 08–21–06 14:52

Earth Tech (Canada) Inc.

Reviewed for general conformance with design intent. Responsibility for detailed design in the shop drawings rests with the Contractor.

Responsibility for verification and correlation of field dimensions, fabrication process, techniques of construction, installation and coordination of all parts of the work rests with the Contractor.

REVIEWED ✓

REVIEWED AS MODIFIED

REVISE AND RE-SUBMIT

NOT REVIEWED

Project No. C28/16/79538

Date: 14/9/02 By: M. Jouba

INSTRUMENT LOOP DIAGRAM

LOOP NO. J100A

FIELD	MASTER CONTROL PANEL	PLC

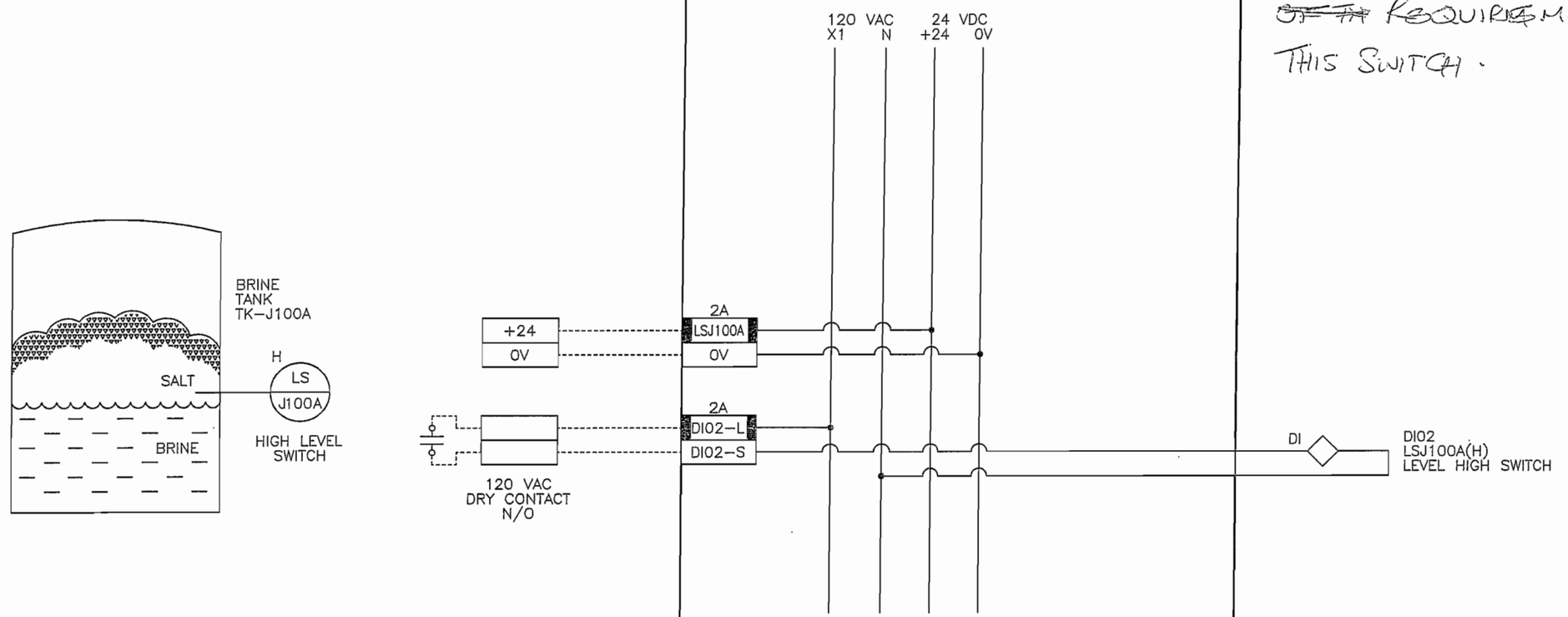

QUESTION OVER USE ~~OF TH~~ REQUIREMENT FOR THIS SWITCH.

NOTE:

PROVINCE OF MANITOBA
R.C.P KOST
08/22/06
REGISTERED PROFESSIONAL ENGINEER

MANCO CONTROL SYSTEMS INC.

METCON SALES & ENGINEERING LIMITED

DATE	DESCRIPTION	BY	REV.
08/21/06	ISSUED FOR APPROVALS	C.S.	01

Winnipeg

THE CITY OF WINNIPEG
WATER TREATMENT PLANT
SODIUM HYPOCHLORITE GENERATING SYSTEM

BRINE HIGH LEVEL ALARM LSJ100A(H)
BRINE TANK TK–J100A

SCALE NTS
DATE 07/31/06
DES CTS DWN CTS
CKD CKD APP APP

DRAWING NO.
M5472–09

Saved by C. SCHACHT 08–21–06 14:54

Earth Tech (Canada) Inc.

Reviewed for general conformance with design intent. Responsibility for detailed design in the shop drawings rests with the Contractor.

Responsibility for verification and correlation of field dimensions, fabrication process, techniques of construction, installation and coordination of all parts of the work rests with the Contractor.

REVIEWED _____

REVIEWED AS MODIFIED ✓

REVISE AND RE-SUBMIT _____

NOT REVIEWED _____

Project No. C28/16/79538

Date: 14/9/06 By: M. Youla

INSTRUMENT LOOP DIAGRAM

LOOP NO. J200A

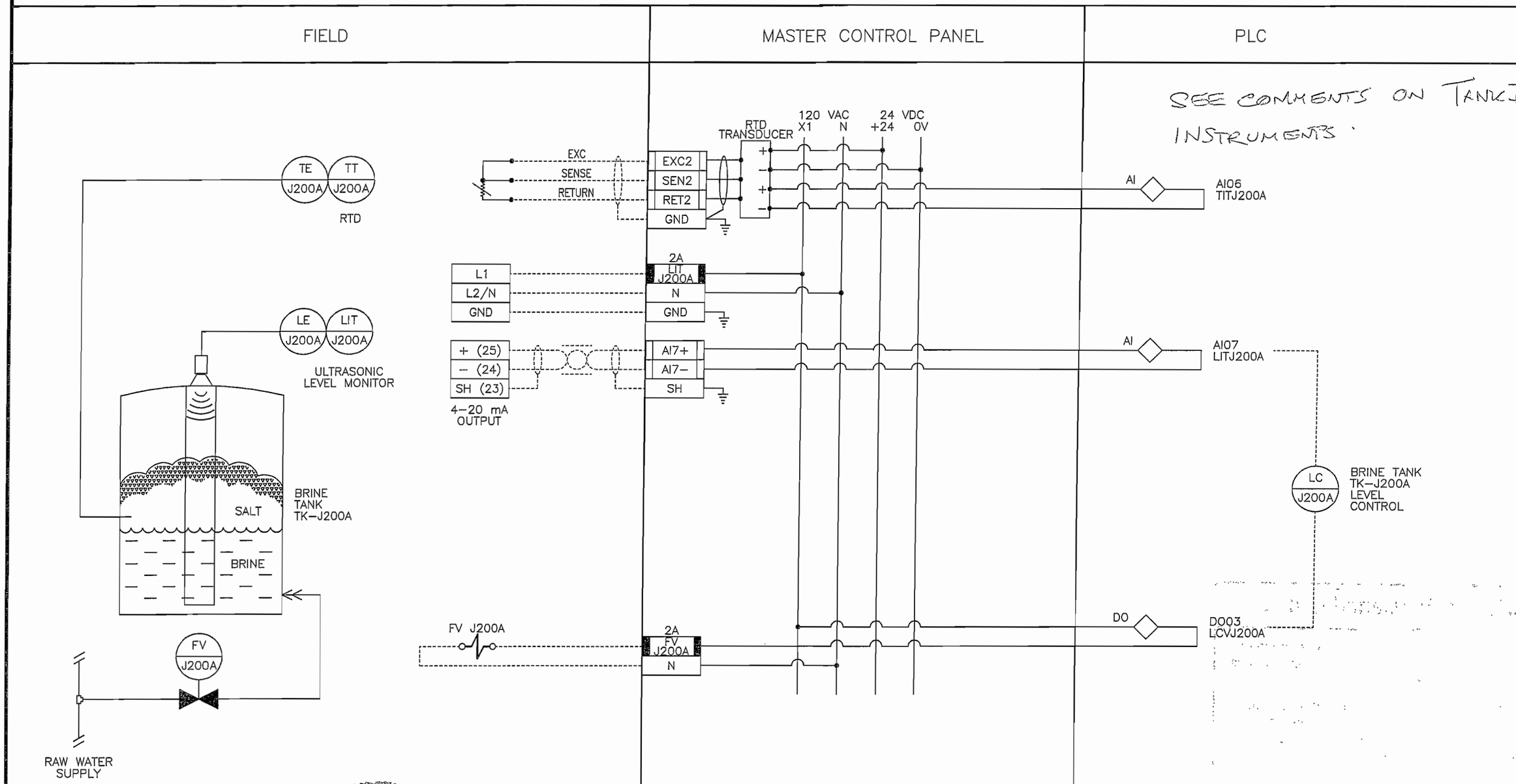

NOTE:

PROVINCE OF MANITOBA
R.C.P KOST
08/22/06
REGISTERED PROFESSIONAL ENGINEER

MANCO CONTROL SYSTEMS INC.

METCON SALES & ENGINEERING LIMITED

DATE	DESCRIPTION	BY	REV.
08/21/06	ISSUED FOR APPROVALS	C.S.	01

Winnipeg

THE CITY OF WINNIPEG
WATER TREATMENT PLANT
SODIUM HYPOCHLORITE GENERATING SYSTEM

BRINE LEVEL CONTROL LCJ200A
BRINE TANK TK−J200A

SCALE NTS
DATE 07/31/06
DES CTS DWN CTS
CKD CKD APP APP

DRAWING NO.
M5472−10

Saved by C. SCHACHT 08−21−06 14:54

Earth Tech (Canada) Inc.

Reviewed for general conformance with design intent. Responsibility for detailed design in the shop drawings rests with the Contractor.

Responsibility for verification and correlation of field dimensions, fabrication process, techniques of construction, installation and coordination of all parts of the work rests with the Contractor.

REVIEWED _____

REVIEWED AS MODIFIED ✓

REVISE AND RE-SUBMIT _____

NOT REVIEWED _____

Project No. C28/16/79538

Date: 14/8/06 By: M. Toulson

INSTRUMENT LOOP DIAGRAM

LOOP NO. J200B

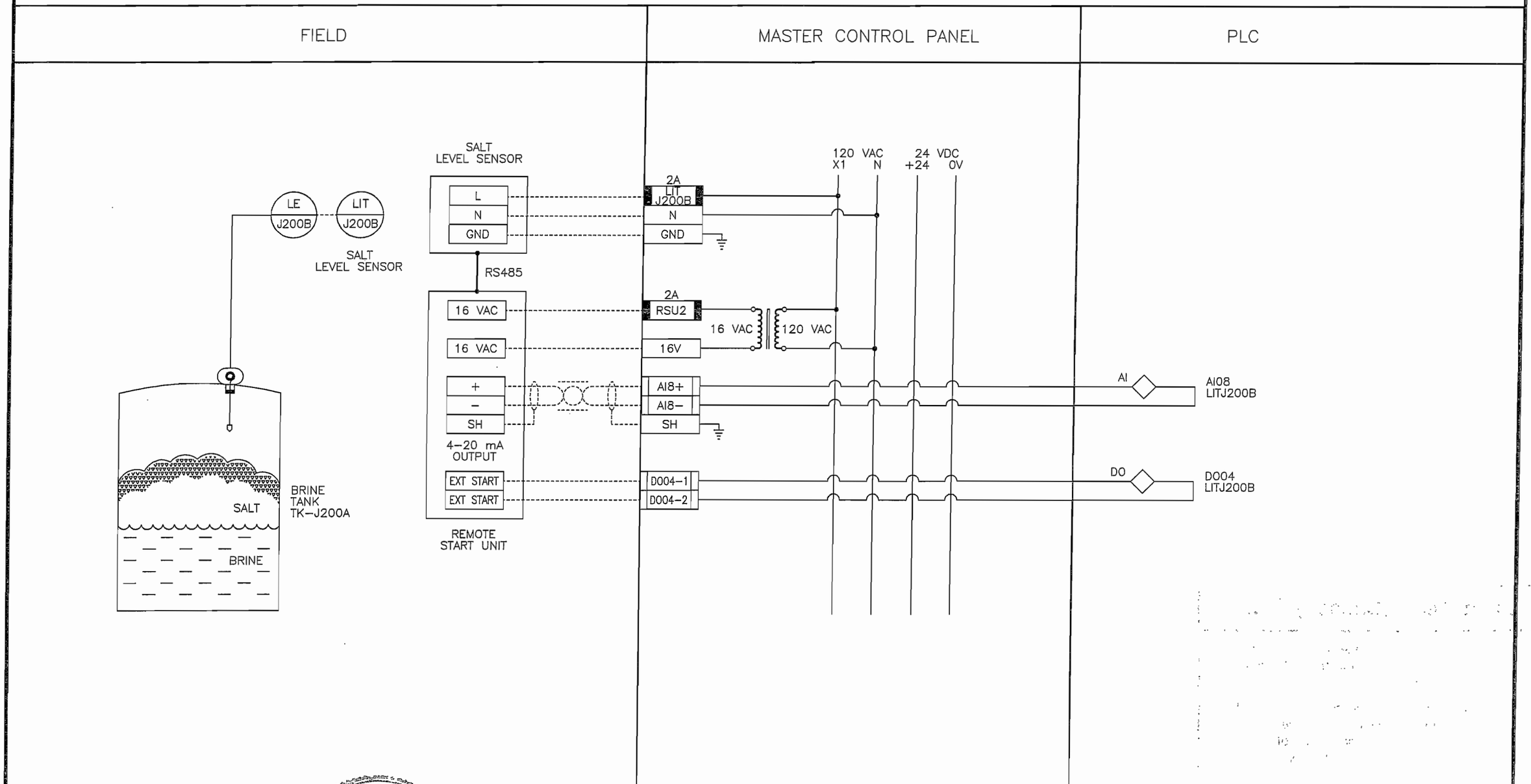

NOTE:

PROVINCE OF MANITOBA
Robert Kost
R.C.P
KOST
08/22/06
REGISTERED PROFESSIONAL ENGINEER

MANCO CONTROL SYSTEMS INC.

METCON SALES & ENGINEERING LIMITED

DATE	DESCRIPTION	BY	REV.
08/21/06	ISSUED FOR APPROVALS	C.S.	01

Winnipeg

THE CITY OF WINNIPEG
WATER TREATMENT PLANT
SODIUM HYPOCHLORITE GENERATING SYSTEM

SALT LEVEL SENSOR LITJ200B
BRINE TANK TK−J200A

SCALE NTS
DATE 07/31/06
DES CTS DWN CTS
CKD CKD APP APP

DRAWING NO.
M5472−11

Saved by C. SCHACHT 08−21−06 14:56

Earth Tech (Canada) Inc.

Reviewed for general conformance with design intent. Responsibility for detailed design in the shop drawings rests with the Contractor.

Responsibility for verification and correlation of field dimensions, fabrication process, techniques of construction, installation and coordination of all parts of the work rests with the Contractor.

REVIEWED ✓

REVIEWED AS MODIFIED

REVISE AND RE-SUBMIT

NOT REVIEWED

Project No. C28/16/79538

Date: 14/9/06 By: M. Poulsen

INSTRUMENT LOOP DIAGRAM

LOOP NO. J200A

FIELD	MASTER CONTROL PANEL	PLC

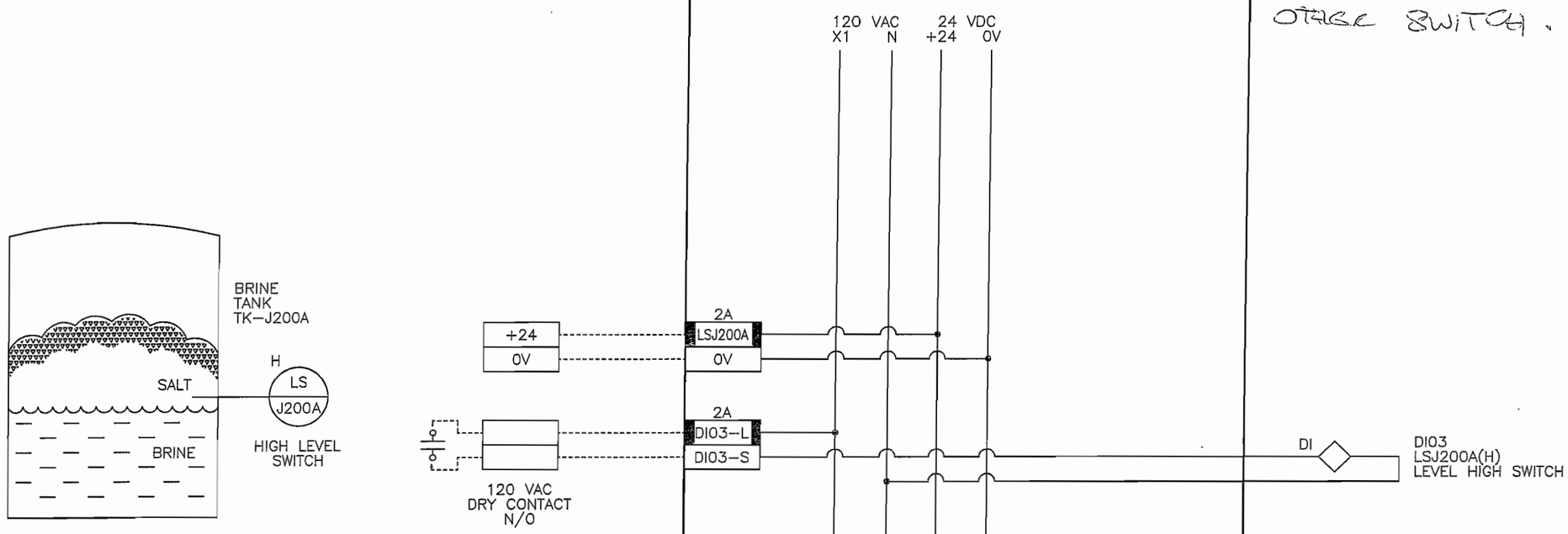

SEE COMMENTS ON OTHER SWITCH.

NOTE:

PROVINCE OF MANITOBA
R.C.P KOST
08/22/06
REGISTERED PROFESSIONAL ENGINEER

MANCO CONTROL SYSTEMS INC.

METCON SALES & ENGINEERING LIMITED

DATE	DESCRIPTION	BY	REV.
08/21/06	ISSUED FOR APPROVALS	C.S.	01

Winnipeg

THE CITY OF WINNIPEG
WATER TREATMENT PLANT
SODIUM HYPOCHLORITE GENERATING SYSTEM

BRINE HIGH LEVEL ALARM LSJ200A(H)
BRINE TANK TK-J200A

SCALE NTS
DATE 07/31/06
DES CTS DWN CTS
CKD CKD APP APP

DRAWING NO.
M5472-12

Saved by C. SCHACHT 08-21-06 15:01

Earth Tech (Canada) Inc.

Reviewed for general conformance with design intent. Responsibility for detailed design in the shop drawings rests with the Contractor.

Responsibility for verification and correlation of field dimensions, fabrication process, techniques of construction, installation and coordination of all parts of the work rests with the Contractor.

REVIEWED _____

REVIEWED AS MODIFIED ✓

REVISE AND RE-SUBMIT _____

NOT REVIEWED _____

Project No. C28/16/79538

Date: 17/9/06 By: M. Foulon

INSTRUMENT LOOP DIAGRAM

LOOP NO. J003A

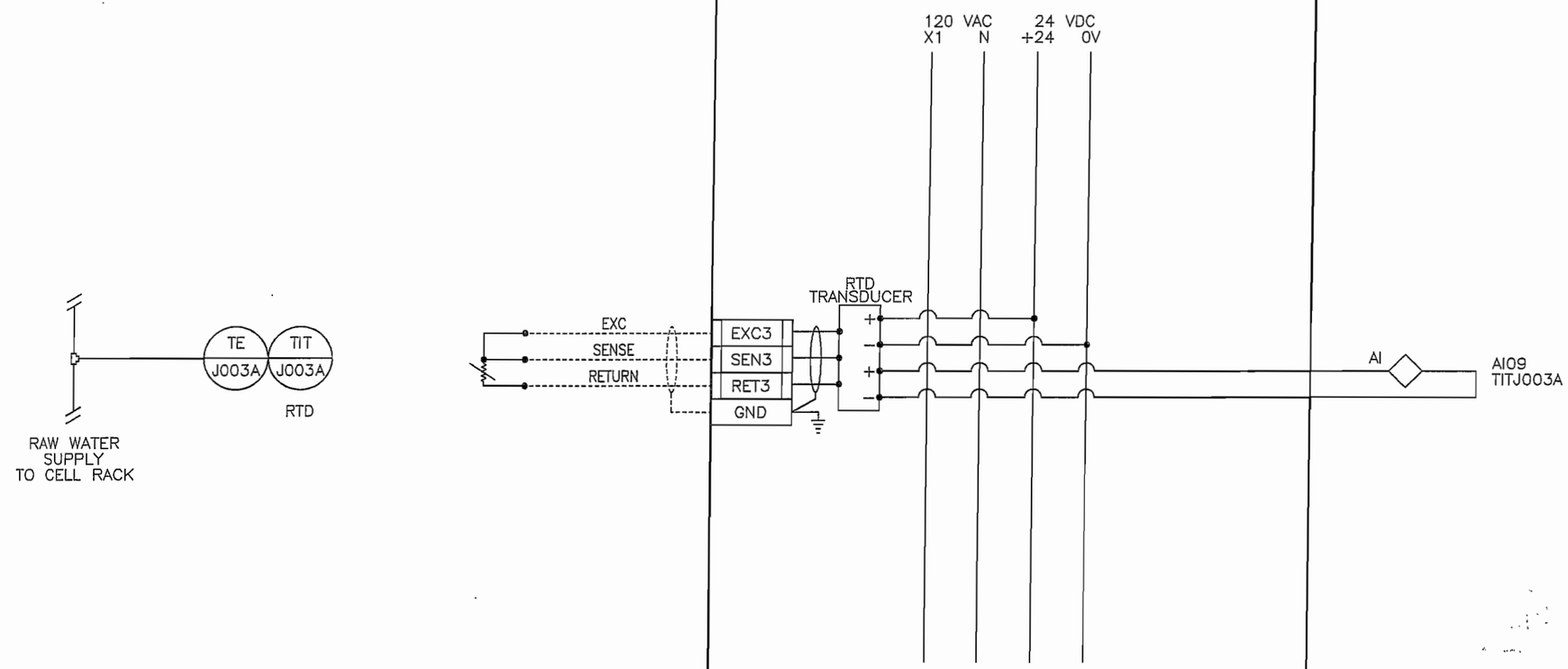

NOTE:

PROVINCE OF MANITOBA
R.C.P
KOST
08/22/06
REGISTERED PROFESSIONAL ENGINEER

MANCO CONTROL SYSTEMS INC.

METCON SALES & ENGINEERING LIMITED

DATE	DESCRIPTION	BY	REV.
08/21/06	ISSUED FOR APPROVALS	C.S.	01

Winnipeg

THE CITY OF WINNIPEG
WATER TREATMENT PLANT
SODIUM HYPOCHLORITE
GENERATING SYSTEM

TEMPERATURE MONITOR TITJ003A
RAW WATER SUPPLY TO CELL RACK

SCALE NTS
DATE 07/31/06
DES CTS DWN CTS
CKD CKD APP APP

DRAWING NO.
M5472-13

Saved by C. SCHACHT 08-21-06 15:01

Earth Tech (Canada) Inc.

Reviewed for general conformance with design intent. Responsibility for detailed design in the shop drawings rests with the Contractor.

Responsibility for verification and correlation of field dimensions, fabrication process, techniques of construction, installation and coordination of all parts of the work rests with the Contractor.

REVIEWED ✓

REVIEWED AS MODIFIED

REVISE AND RE-SUBMIT

NOT REVIEWED

Project No. C88/IC/79588

Date: 14/9/06 By: M. Youlan

INSTRUMENT LOOP DIAGRAM

LOOP NO. J400

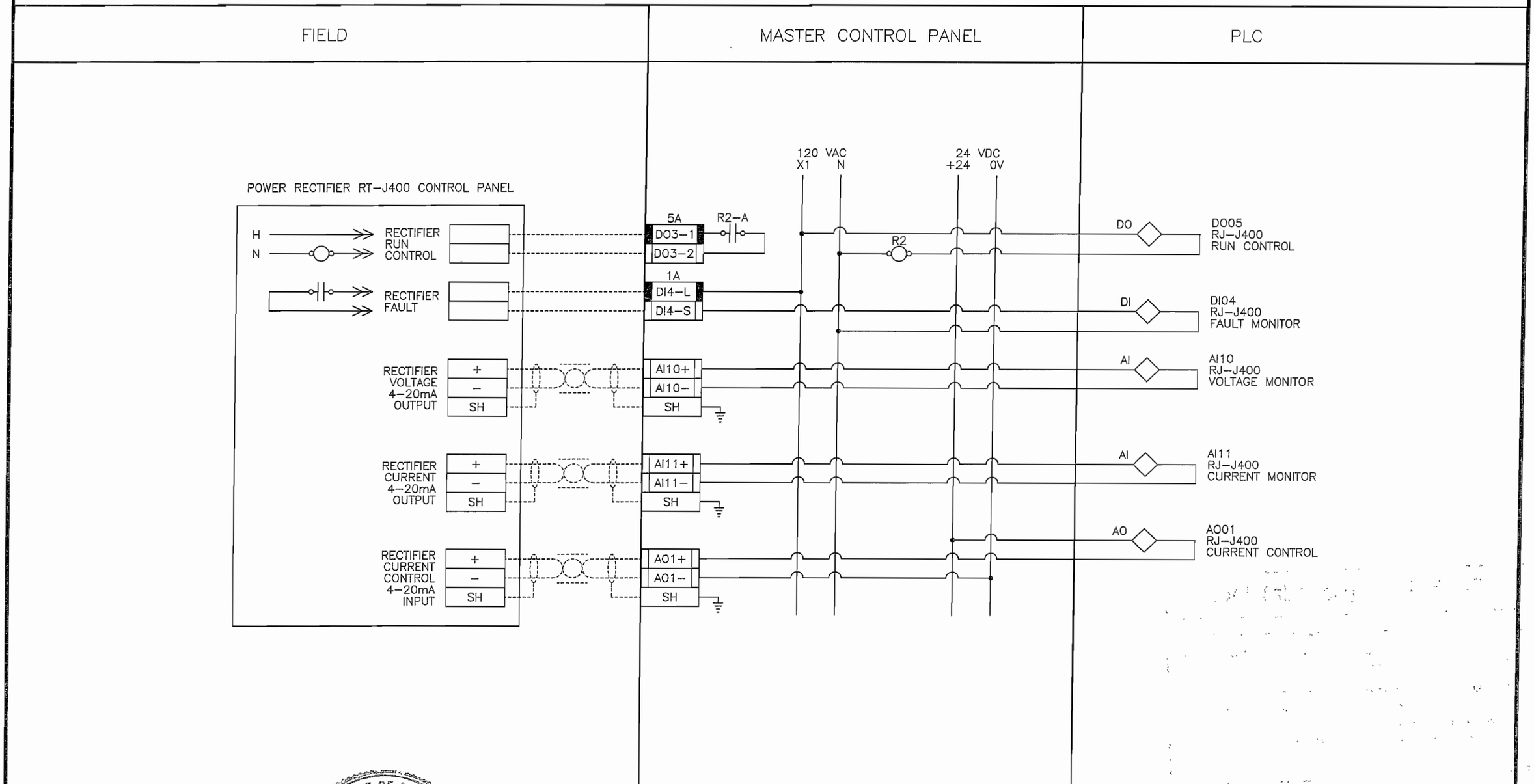

NOTE:

PROVINCE OF MANITOBA
R.C.P KOST
08/22/06
REGISTERED PROFESSIONAL ENGINEER

MANCO CONTROL SYSTEMS INC.

METCON SALES & ENGINEERING LIMITED

DATE	DESCRIPTION	BY	REV.
08/21/06	ISSUED FOR APPROVALS	C.S.	01

Winnipeg

THE CITY OF WINNIPEG
WATER TREATMENT PLANT
SODIUM HYPOCHLORITE GENERATING SYSTEM

SODIUM HYPOCHLORITE GENERATOR EL–J400
POWER RECTIFIER CONTROL RT–J400

SCALE NTS
DATE 07/31/06
DES CTS DWN CTS
CKD CKD APP APP

DRAWING NO.
M5472–14

Saved by C. SCHACHT 08–21–06 15:01

Earth Tech (Canada) Inc.

Reviewed for general conformance with design intent. Responsibility for detailed design in the shop drawings rests with the Contractor.

Responsibility for verification and correlation of field dimensions, fabrication process, techniques of construction, installation and coordination of all parts of the work rests with the Contractor.

REVIEWED ✓

REVIEWED AS MODIFIED

REVISE AND RE-SUBMIT

NOT REVIEWED

Project No. C28/16/79538

Date: 14/9/06 By: M. Youlon

INSTRUMENT LOOP DIAGRAM

LOOP NO. J420

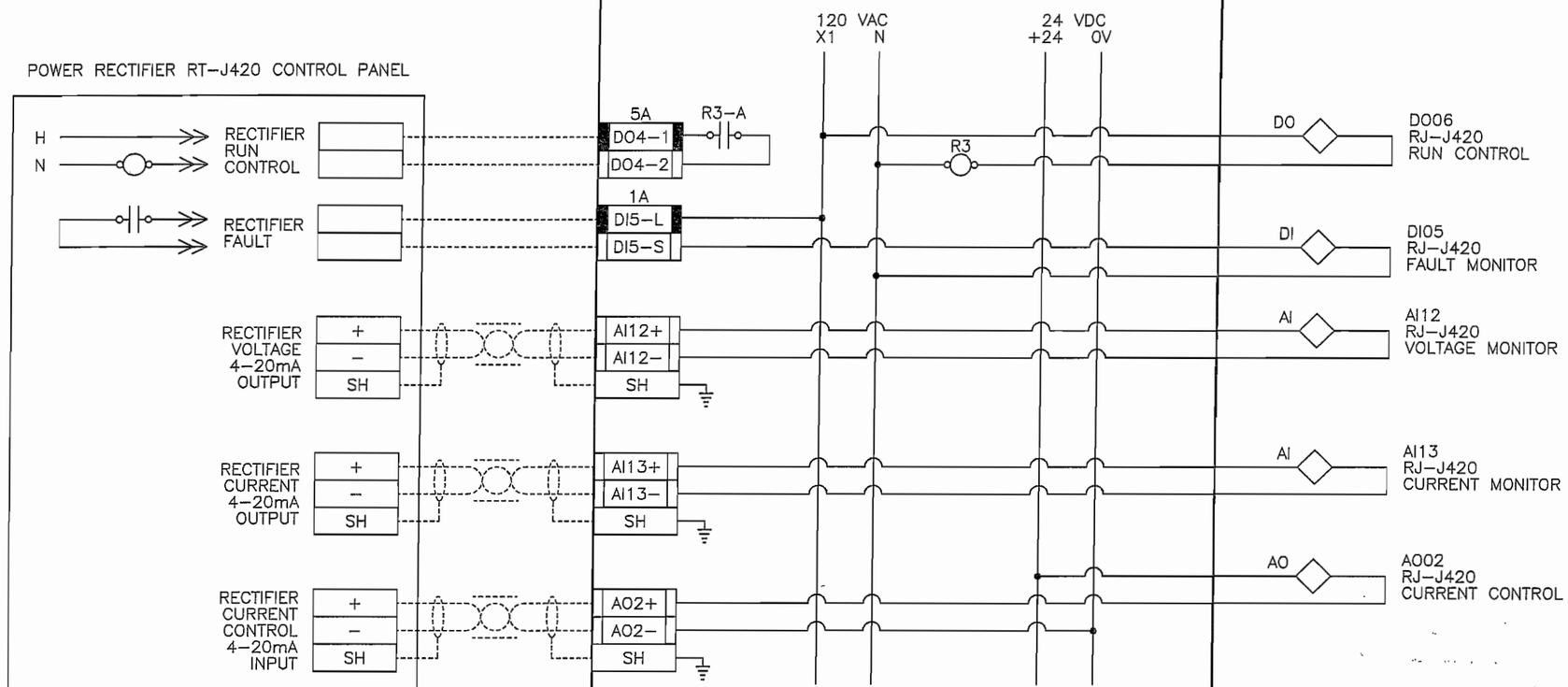

NOTE:

PROVINCE OF MANITOBA
R.C.P KOST
08/22/06
REGISTERED PROFESSIONAL ENGINEER

MANCO CONTROL SYSTEMS INC.

METCON SALES & ENGINEERING LIMITED

DATE	DESCRIPTION	BY	REV.
08/21/06	ISSUED FOR APPROVALS	C.S.	01

Winnipeg

THE CITY OF WINNIPEG
WATER TREATMENT PLANT
SODIUM HYPOCHLORITE GENERATING SYSTEM

SODIUM HYPOCHLORITE GENERATOR EL-J420
POWER RECTIFIER CONTROL RT-J420

SCALE NTS
DATE 07/31/06
DES CTS DWN CTS
CKD CKD APP APP

DRAWING NO.
M5472-15

Saved by C. SCHACHT 08-21-06 15:03

Earth Tech (Canada) Inc.

Reviewed for general conformance with design intent. Responsibility for detailed design in the shop drawings rests with the Contractor.

Responsibility for verification and correlation of field dimensions, fabrication process, techniques of construction, installation and coordination of all parts of the work rests with the Contractor.

REVIEWED ✓

REVIEWED AS MODIFIED

REVISE AND RE-SUBMIT

NOT REVIEWED

Project No. C28/16/79538

Date: 14/9/06 By: N. Tomb

INSTRUMENT LOOP DIAGRAM

LOOP NO. J440

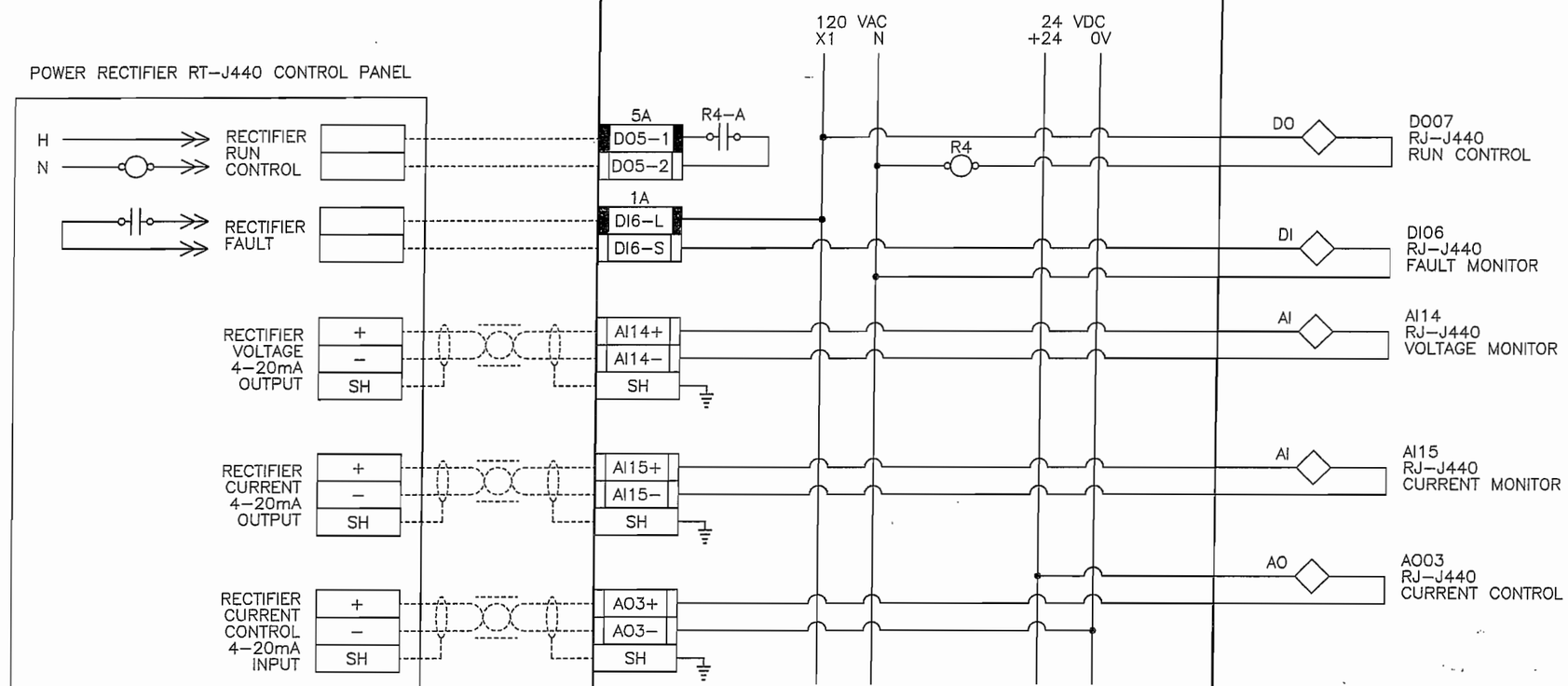

NOTE:

PROVINCE OF MANITOBA
R.C.P KOST
08/22/06
REGISTERED PROFESSIONAL ENGINEER

MANCO CONTROL SYSTEMS INC.

METCON SALES & ENGINEERING LIMITED

DATE	DESCRIPTION	BY	REV.
08/21/06	ISSUED FOR APPROVALS	C.S.	01

Winnipeg

THE CITY OF WINNIPEG
WATER TREATMENT PLANT
SODIUM HYPOCHLORITE GENERATING SYSTEM

SODIUM HYPOCHLORITE GENERATOR EL–J440
POWER RECTIFIER CONTROL RT–J440

SCALE NTS
DATE 07/31/06
DES CTS DWN CTS
CKD CKD APP APP

DRAWING NO.
M5472–16

Saved by C. SCHACHT 08–21–06 15:04

Earth Tech (Canada) Inc.

Reviewed for general conformance with design intent. Responsibility for detailed design in the shop drawings rests with the Contractor.

Responsibility for verification and correlation of field dimensions, fabrication process, techniques of construction, installation and coordination of all parts of the work rests with the Contractor.

REVIEWED ✓

REVIEWED AS MODIFIED

REVISE AND RE-SUBMIT

NOT REVIEWED

Project No. C28/16/79538

Date: 14/9/06 By: M. Jones

INSTRUMENT LOOP DIAGRAM

LOOP NO. J450A

FIELD	MASTER CONTROL PANEL	PLC

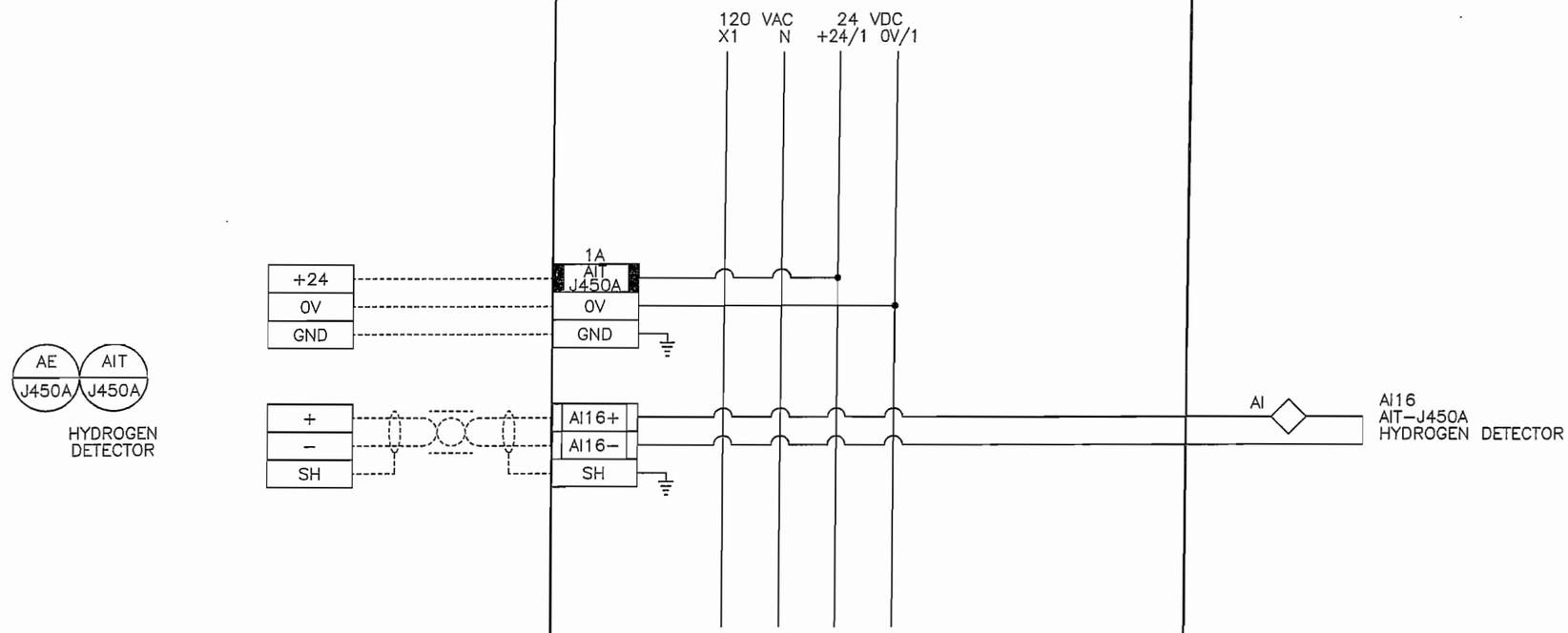

NOTE:

PROVINCE OF MANITOBA
R.C.P
KOST
08/22/06
REGISTERED PROFESSIONAL ENGINEER

MSI MANCO CONTROL SYSTEMS INC.

METCON SALES & ENGINEERING LIMITED

DATE	DESCRIPTION	BY	REV.
08/21/06	ISSUED FOR APPROVALS	C.S.	01

Winnipeg

THE CITY OF WINNIPEG
WATER TREATMENT PLANT
SODIUM HYPOCHLORITE GENERATING SYSTEM

HYDROGEN DETECTOR HD−J450A

SCALE NTS
DATE 07/31/06
DES CTS DWN CTS
CKD CKD APP APP

DRAWING NO.
M5472−17

Saved by C. SCHACHT 08−21−06 15:04

Earth Tech (Canada) Inc.

Reviewed for general conformance with design intent. Responsibility for detailed design in the shop drawings rests with the Contractor.

Responsibility for verification and correlation of field dimensions, fabrication process, techniques of construction, installation and coordination of all parts of the work rests with the Contractor.

REVIEWED ✓

REVIEWED AS MODIFIED

REVISE AND RE-SUBMIT

NOT REVIEWED

Project No. C28/16/79538

Date: 14/9/06 By: M. Foulon

INSTRUMENT LOOP DIAGRAM

LOOP NO. J450B

FIELD	MASTER CONTROL PANEL	PLC

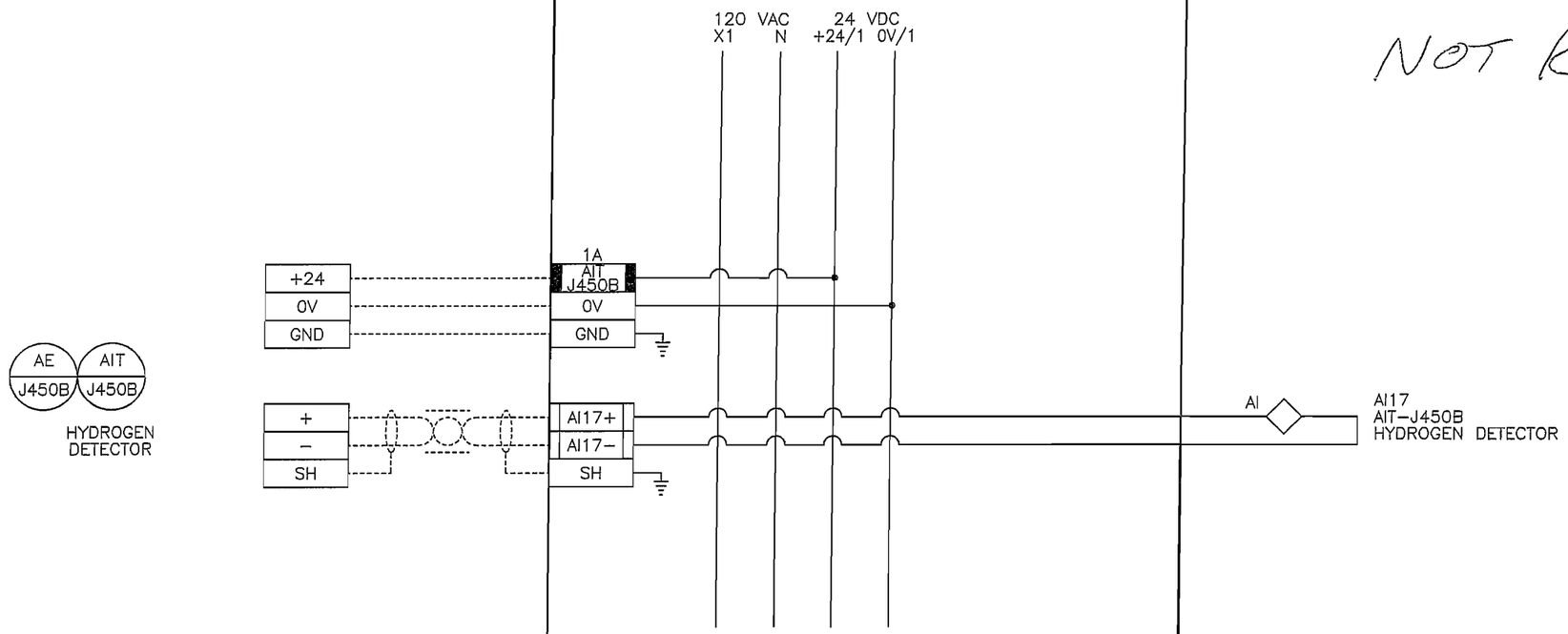

NOTE:

PROVINCE OF MANITOBA
R.C.P KOST
08/22/06
REGISTERED PROFESSIONAL ENGINEER

MCSI MANCO CONTROL SYSTEMS INC.

METCON SALES & ENGINEERING LIMITED

DATE	DESCRIPTION	BY	REV.
08/21/06	ISSUED FOR APPROVALS	C.S.	01

Winnipeg

THE CITY OF WINNIPEG
WATER TREATMENT PLANT
SODIUM HYPOCHLORITE GENERATING SYSTEM

HYDROGEN DETECTOR AIT–J450B

SCALE NTS
DATE 07/31/06
DES CTS DWN CTS
CKD CKD APP APP

DRAWING NO.
M5472–18

Saved by C. SCHACHT 08–21–06 15:05

Earth Tech (Canada) Inc.

Reviewed for general conformance with design intent. Responsibility for detailed design in the shop drawings rests with the Contractor.

Responsibility for verification and correlation of field dimensions, fabrication process, techniques of construction, installation and coordination of all parts of the work rests with the Contractor.

REVIEWED _____

REVIEWED AS MODIFIED ✓

REVISE AND RE-SUBMIT _____

NOT REVIEWED _____

Project No. C28/16/79538

Date: 14/8/06 By: [signature]

INSTRUMENT LOOP DIAGRAM

LOOP NO. J550A

FIELD	MASTER CONTROL PANEL	PLC

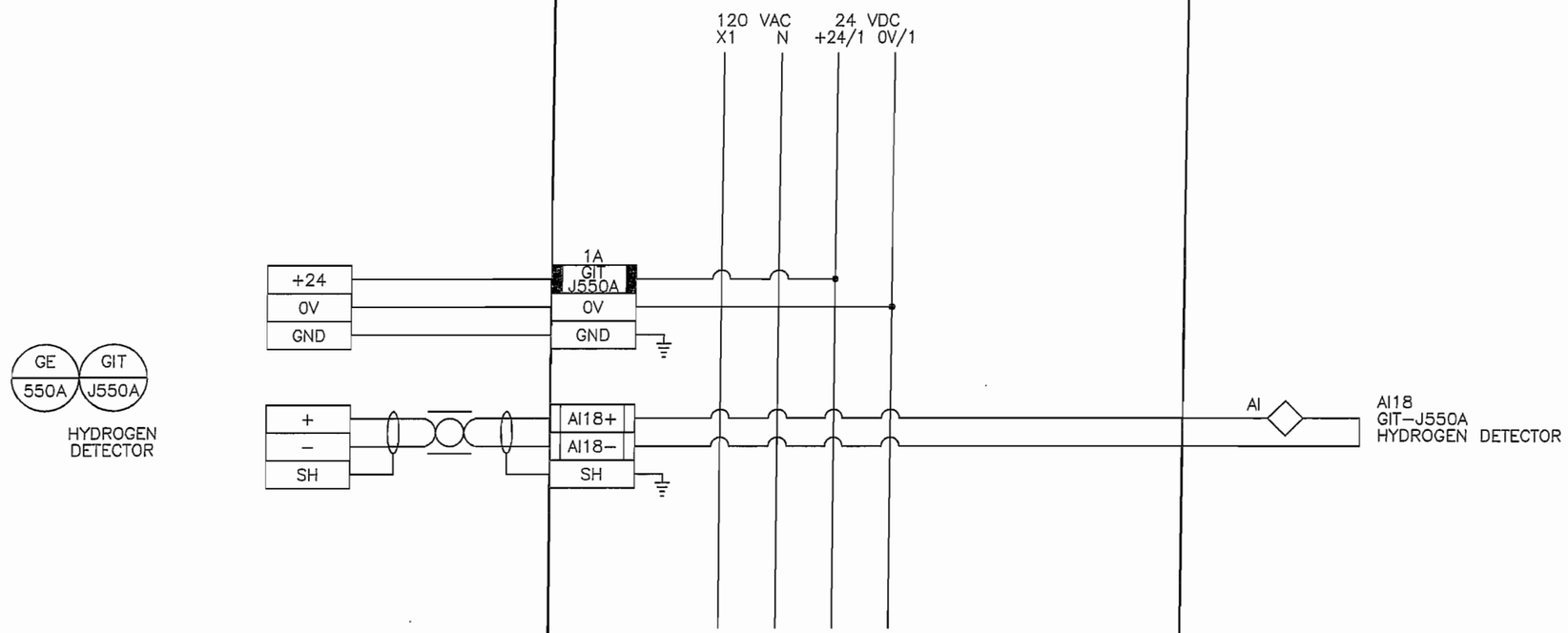

NOTE:

PROVINCE OF MANITOBA
R.C.P
KOST
08/22/06
REGISTERED PROFESSIONAL ENGINEER

MANCO CONTROL SYSTEMS INC.

METCON SALES & ENGINEERING LIMITED

DATE	DESCRIPTION	BY	REV.
08/21/06	ISSUED FOR APPROVALS	C.S.	01

Winnipeg

THE CITY OF WINNIPEG
WATER TREATMENT PLANT
SODIUM HYPOCHLORITE
GENERATING SYSTEM

HYDROGEN DETECTOR GIT−J550A

SCALE NTS
DATE 07/31/06
DES CTS DWN CTS
CKD CKD APP APP

DRAWING NO.
M5472−19

Saved by C. SCHACHT 08−21−06 15:08

Earth Tech (Canada) Inc.

Reviewed for general conformance with design intent. Responsibility for detailed design in the shop drawings rests with the Contractor.

Responsibility for verification and correlation of field dimensions, fabrication process, techniques of construction, installation and coordination of all parts of the work rests with the Contractor.

REVIEWED ✓

REVIEWED AS MODIFIED

REVISE AND RE-SUBMIT

NOT REVIEWED

Project No. C28/16/79538

Date: 14/8/06 By: [signature]

INSTRUMENT LOOP DIAGRAM

LOOP NO. J550B

FIELD	MASTER CONTROL PANEL	PLC

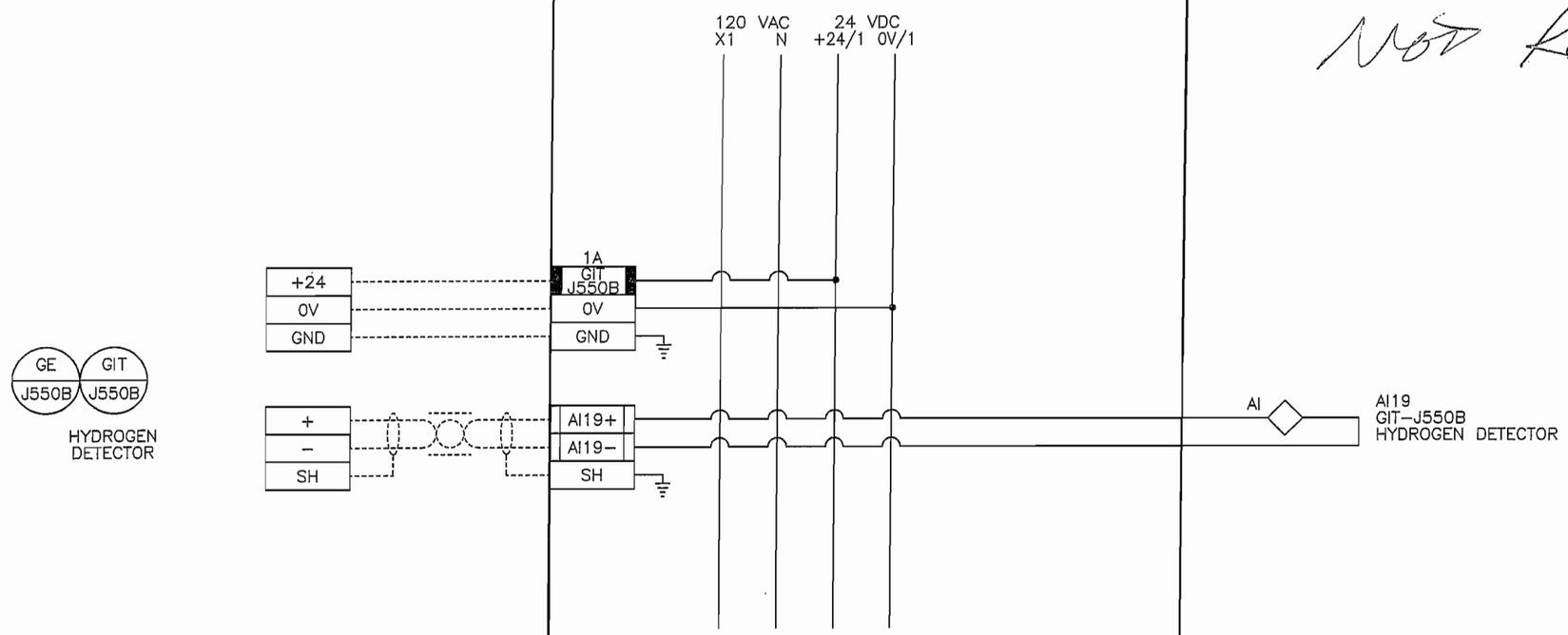

NOT USED.

NOTE:

PROVINCE OF MANITOBA
R.C.P
KOST
08/22/06
REGISTERED PROFESSIONAL ENGINEER

MANCO CONTROL SYSTEMS INC.

METCON SALES & ENGINEERING LIMITED

DATE	DESCRIPTION	BY	REV.
08/21/06	ISSUED FOR APPROVALS	C.S.	01

Winnipeg

THE CITY OF WINNIPEG
WATER TREATMENT PLANT
SODIUM HYPOCHLORITE GENERATING SYSTEM

HYDROGEN DETECTOR GIT−J550B

SCALE NTS
DATE 08/02/06
DES CTS DWN CTS
CKD CKD APP APP

DRAWING NO.
M5472−20

Saved by C. SCHACHT 08−21−06 15:09

Earth Tech (Canada) Inc.

Reviewed for general conformance with design intent. Responsibility for detailed design in the shop drawings rests with the Contractor.

Responsibility for verification and correlation of field dimensions, fabrication process, techniques of construction, installation and coordination of all parts of the work rests with the Contractor.

REVIEWED _____

REVIEWED AS MODIFIED ✓

REVISE AND RE-SUBMIT _____

NOT REVIEWED _____

Project No. C28/16/79538

Date: 14/9/06 By: M. Poulsen

INSTRUMENT LOOP DIAGRAM

LOOP NO. J400

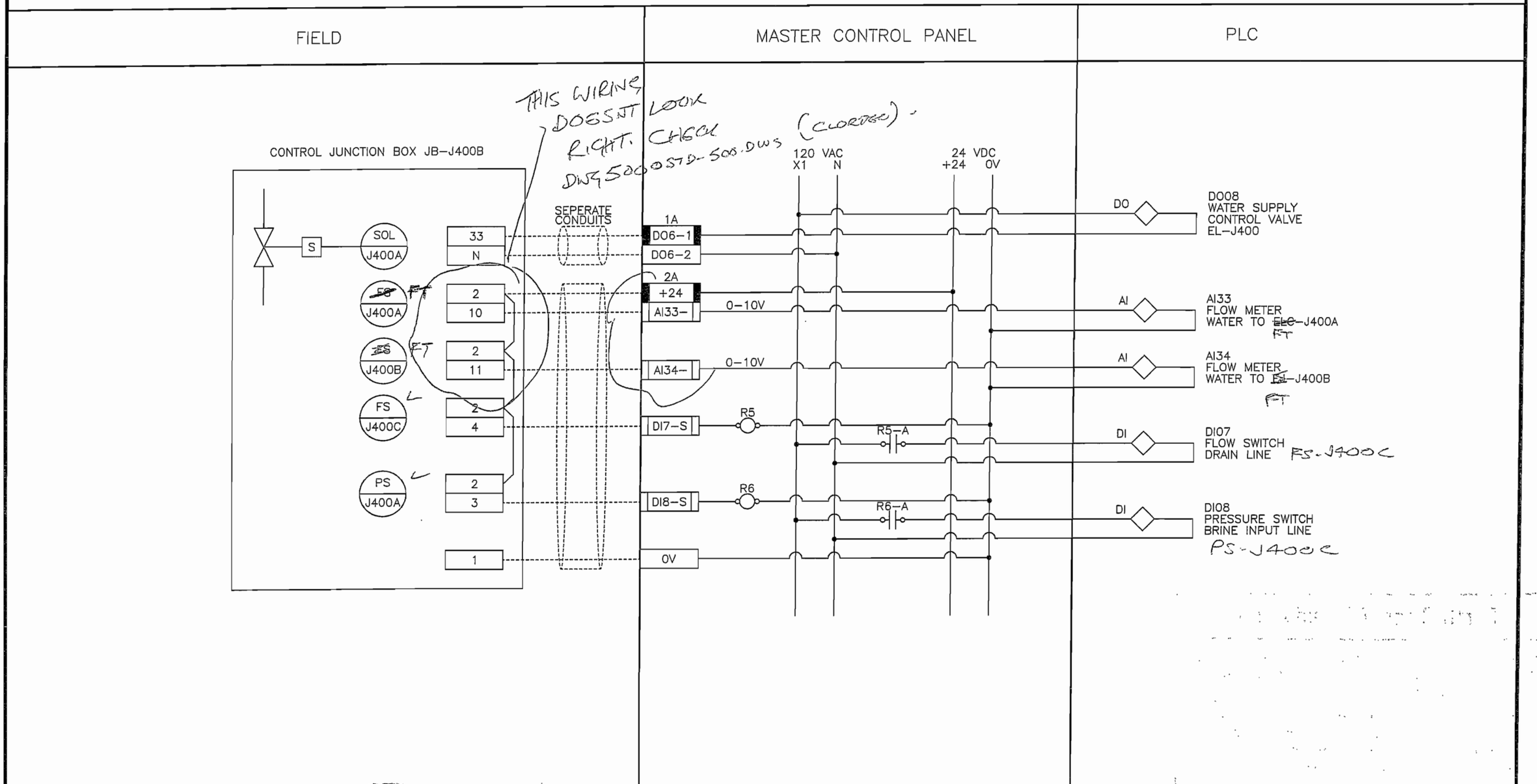

NOTE:

PROVINCE OF MANITOBA
R.C.P KOST
08/22/06
REGISTERED PROFESSIONAL ENGINEER

MANCO CONTROL SYSTEMS INC.

METCON SALES & ENGINEERING LIMITED

DATE	DESCRIPTION	BY	REV.
08/21/06	ISSUED FOR APPROVALS	C.S.	01

Winnipeg

THE CITY OF WINNIPEG
WATER TREATMENT PLANT
SODIUM HYPOCHLORITE GENERATING SYSTEM

SODIUM HYPOCHLORITE GENERATOR EL-J400
CONTROL JUNCTION BOX JB-J400B

SCALE NTS
DATE 07/31/06
DES CTS DWN CTS
CKD CKD APP APP

DRAWING NO.
M5472-21

Saved by C. SCHACHT 08-21-06 15:12

Earth Tech (Canada) Inc.

Reviewed for general conformance with design intent. Responsibility for detailed design in the shop drawings rests with the Contractor.

Responsibility for verification and correlation of field dimensions, fabrication process, techniques of construction, installation and coordination of all parts of the work rests with the Contractor.

REVIEWED _____

REVIEWED AS MODIFIED ✓

REVISE AND RE-SUBMIT _____

NOT REVIEWED _____

Project No. C28/16/79538

Date: 15/9/06 By: [signature]

INSTRUMENT LOOP DIAGRAM

LOOP NO. J400

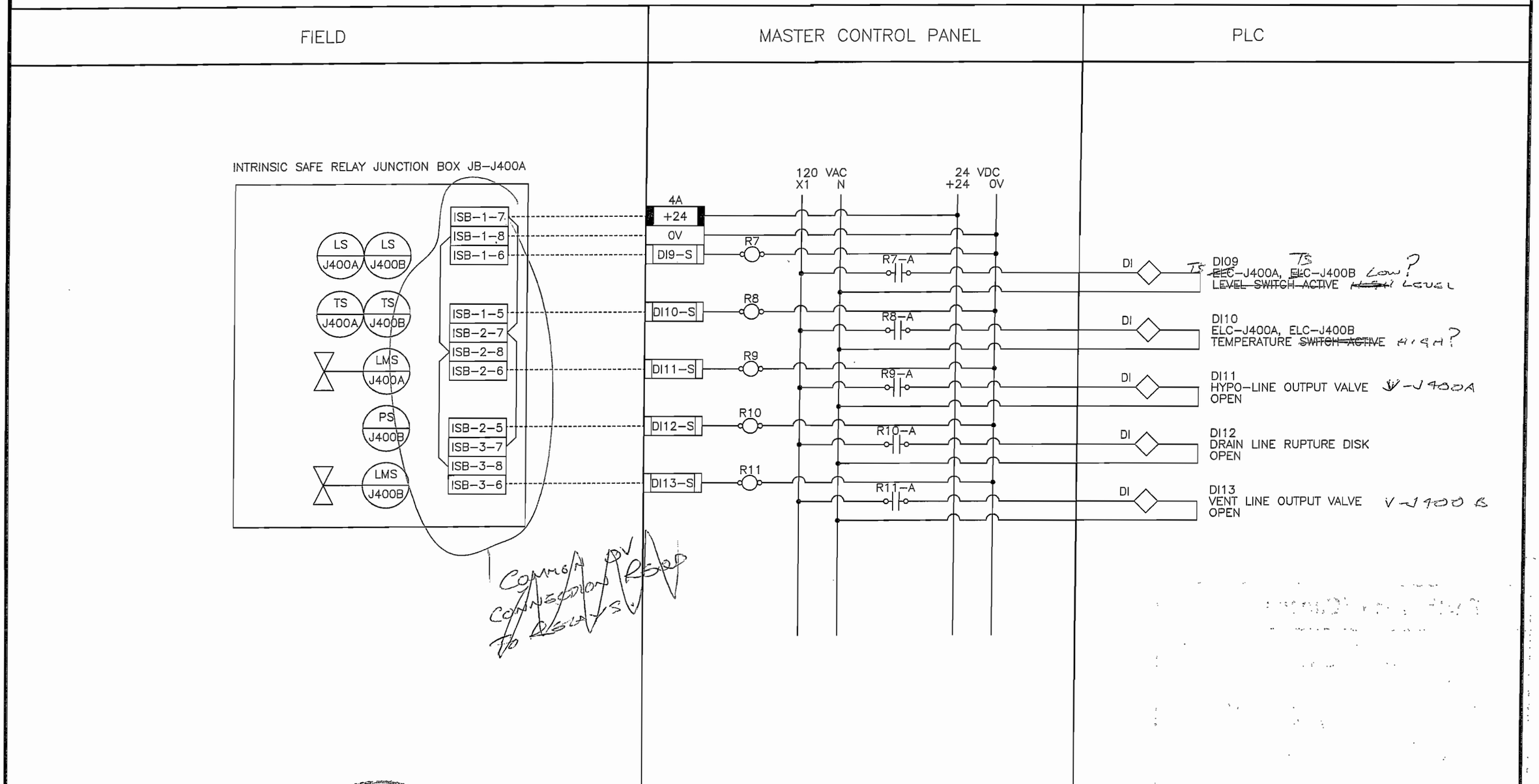

NOTE:

PROVINCE OF MANITOBA
R.C.P KOST
08/22/06
REGISTERED PROFESSIONAL ENGINEER

MANCO CONTROL SYSTEMS INC.

METCON SALES & ENGINEERING LIMITED

DATE	DESCRIPTION	BY	REV.
08/21/06	ISSUED FOR APPROVALS	C.S.	01

Winnipeg

THE CITY OF WINNIPEG
WATER TREATMENT PLANT
SODIUM HYPOCHLORITE GENERATING SYSTEM

SODIUM HYPOCHLORITE GENERATOR EL–J400
INTRINSIC SAFE RELAY JUNCTION BOX JB–J400A

SCALE NTS
DATE 07/31/06
DES CTS DWN CTS
CKD CKD APP APP

DRAWING NO.
M5472–22

Saved by C. SCHACHT 08–21–06 15:12

Earth Tech (Canada) Inc.

Reviewed for general conformance with design intent. Responsibility for detailed design in the shop drawings rests with the Contractor.

Responsibility for verification and correlation of field dimensions, fabrication process, techniques of construction, installation and coordination of all parts of the work rests with the Contractor.

REVIEWED _____

REVIEWED AS MODIFIED ✓

REVISE AND RE-SUBMIT _____

NOT REVIEWED _____

Project No. C28/16/79538

Date: 15/9/06 By: [signature]

INSTRUMENT LOOP DIAGRAM

LOOP NO. J420

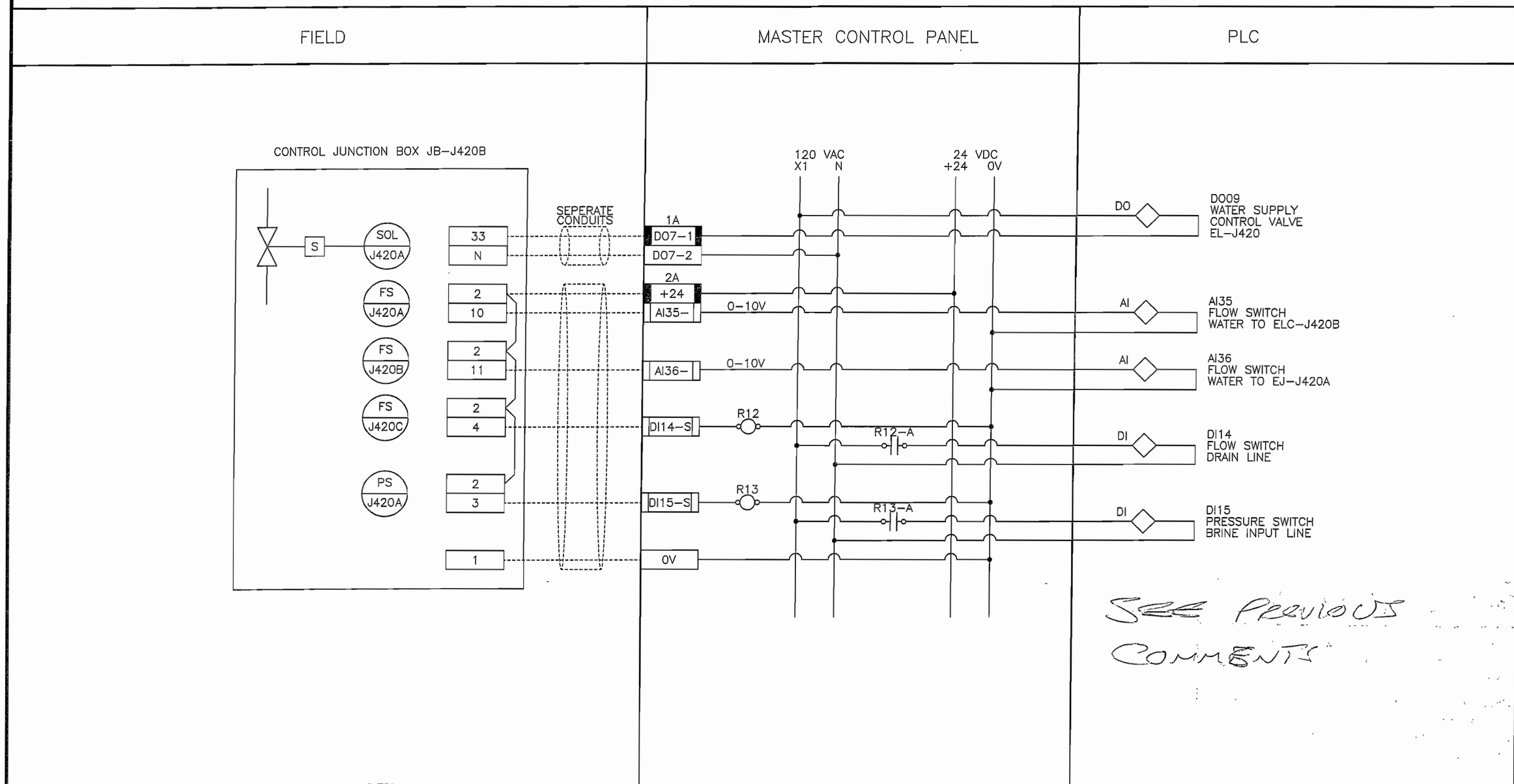

SEE PREVIOUS COMMENTS

NOTE:

PROVINCE OF MANITOBA
R.C.P KOST
08/22/06
REGISTERED PROFESSIONAL ENGINEER

MANCO CONTROL SYSTEMS INC.

METCON SALES & ENGINEERING LIMITED

DATE	DESCRIPTION	BY	REV.
08/21/06	ISSUED FOR APPROVALS	C.S.	01

Winnipeg

THE CITY OF WINNIPEG
WATER TREATMENT PLANT
SODIUM HYPOCHLORITE GENERATING SYSTEM

SODIUM HYPOCHLORITE GENERATOR EL–J420
CONTROL JUNCTION BOX JB–J420B

SCALE NTS
DATE 07/31/06
DES CTS DWN CTS
CKD CKD APP APP

DRAWING NO.
M5472–23

Saved by C. SCHACHT 08–21–06 15:12

Earth Tech (Canada) Inc.

Reviewed for general conformance with design intent. Responsibility for detailed design in the shop drawings rests with the Contractor.

Responsibility for verification and correlation of field dimensions, fabrication process, techniques of construction, installation and coordination of all parts of the work rests with the Contractor.

REVIEWED ✓

REVIEWED AS MODIFIED

REVISE AND RE-SUBMIT

NOT REVIEWED

Project No. C28/L6/79538

Date: 15/9/06 By: [signature]

INSTRUMENT LOOP DIAGRAM

LOOP NO. J420

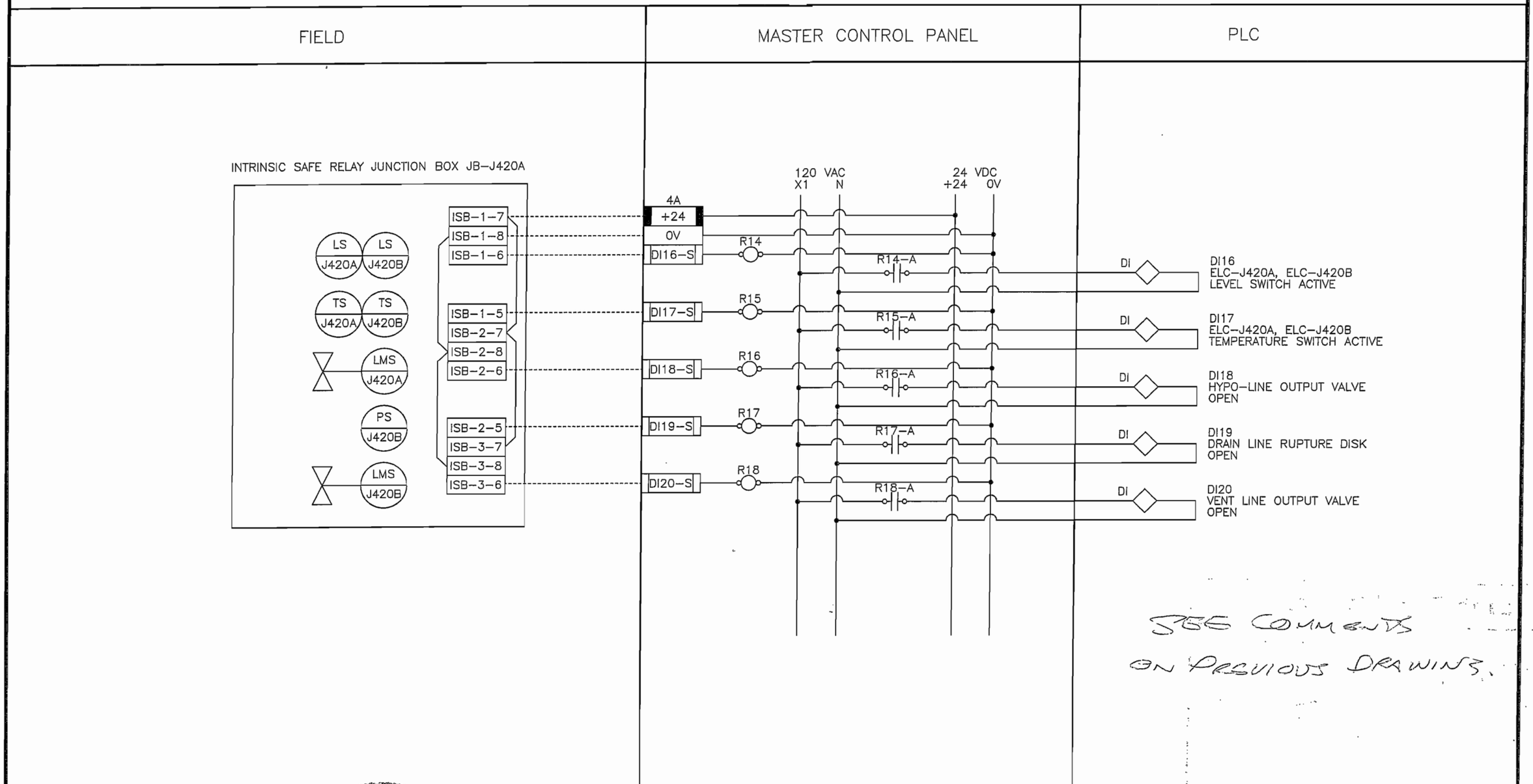

SEE COMMENTS ON PREVIOUS DRAWINGS.

NOTE:

PROVINCE OF MANITOBA
R.C.P KOST
08/22/06
REGISTERED PROFESSIONAL ENGINEER

MANCO CONTROL SYSTEMS INC.

METCON SALES & ENGINEERING LIMITED

DATE	DESCRIPTION	BY	REV.
08/21/06	ISSUED FOR APPROVALS	C.S.	01

Winnipeg

THE CITY OF WINNIPEG
WATER TREATMENT PLANT
SODIUM HYPOCHLORITE GENERATING SYSTEM

SODIUM HYPOCHLORITE GENERATOR EL–J420
INTRINSIC SAFE RELAY JUNCTION BOX JB–J420A

SCALE NTS
DATE 07/31/06
DES CTS DWN CTS
CKD CKD APP APP

DRAWING NO.
M5472–24

Saved by C. SCHACHT 08–21–06 15:14

Earth Tech (Canada) Inc.

Reviewed for general conformance with design intent. Responsibility for detailed design in the shop drawings rests with the Contractor.

Responsibility for verification and correlation of field dimensions, fabrication process, techniques of construction, installation and coordination of all parts of the work rests with the Contractor.

REVIEWED _____

REVIEWED AS MODIFIED ✓

REVISE AND RE-SUBMIT _____

NOT REVIEWED _____

Project No. C28/16/79538

Date: 15/9/06 By: M. Foulon

INSTRUMENT LOOP DIAGRAM

LOOP NO. J440

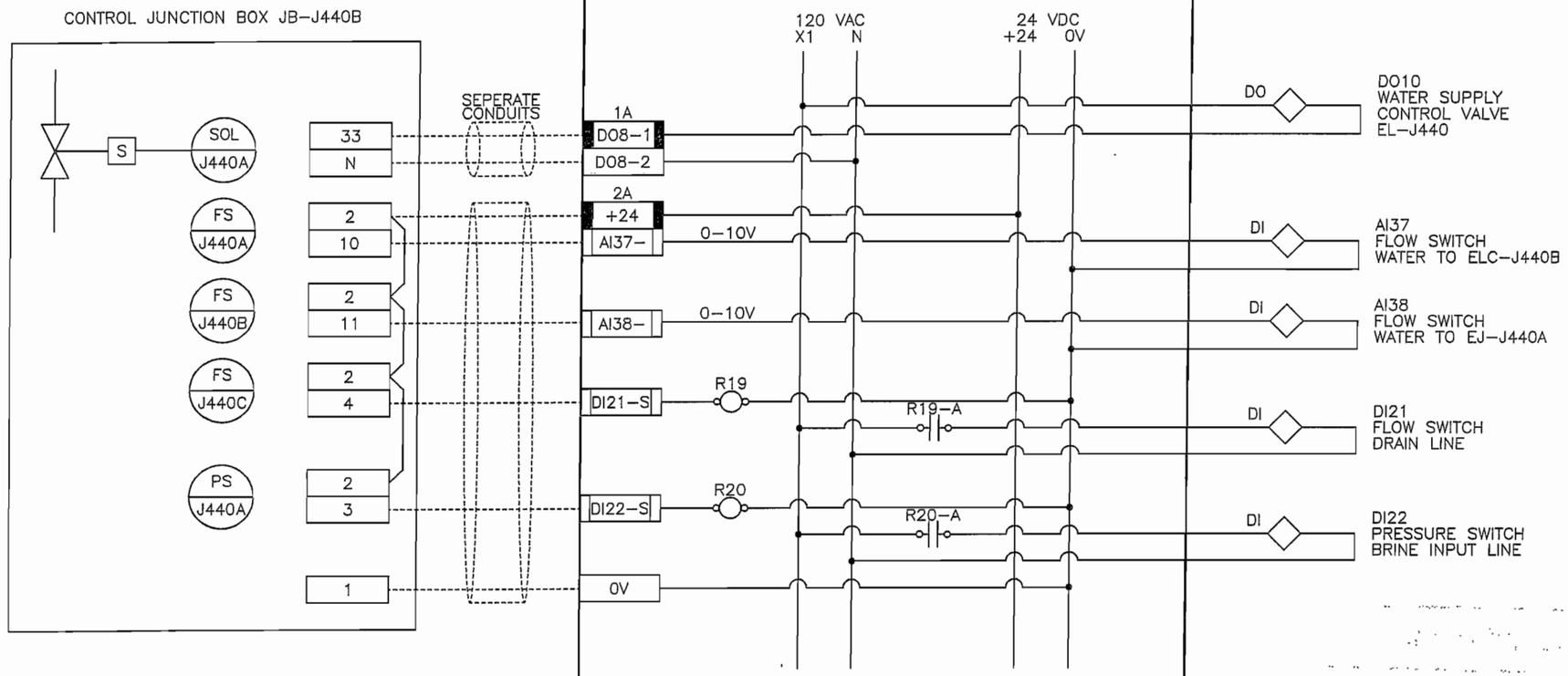

SEE COMMENTS ON PREVIOUS DRAWINGS

NOTE:

PROVINCE OF MANITOBA
R.C.P KOST
08/22/06
REGISTERED PROFESSIONAL ENGINEER

MANCO CONTROL SYSTEMS INC.

METCON SALES & ENGINEERING LIMITED

DATE	DESCRIPTION	BY	REV.
08/21/06	ISSUED FOR APPROVALS	C.S.	01

Winnipeg

THE CITY OF WINNIPEG

WATER TREATMENT PLANT

SODIUM HYPOCHLORITE GENERATING SYSTEM

SODIUM HYPOCHLORITE GENERATOR EL-J440
CONTROL JUNCTION BOX JB-J440B

SCALE NTS
DATE 07/31/06
DES CTS DWN CTS
CKD CKD APP APP

DRAWING NO.
M5472-25

Saved by C. SCHACHT 08-21-06 15:14

Earth Tech (Canada) Inc.

Reviewed for general conformance with design intent. Responsibility for detailed design in the shop drawings rests with the Contractor.

Responsibility for verification and correlation of field dimensions, fabrication process, techniques of construction, installation and coordination of all parts of the work rests with the Contractor.

REVIEWED _____

REVIEWED AS MODIFIED ✓

REVISE AND RE-SUBMIT _____

NOT REVIEWED _____

Project No. C28/06/79538

Date: 15/9/06 By: M. Foulon

INSTRUMENT LOOP DIAGRAM

LOOP NO. J440

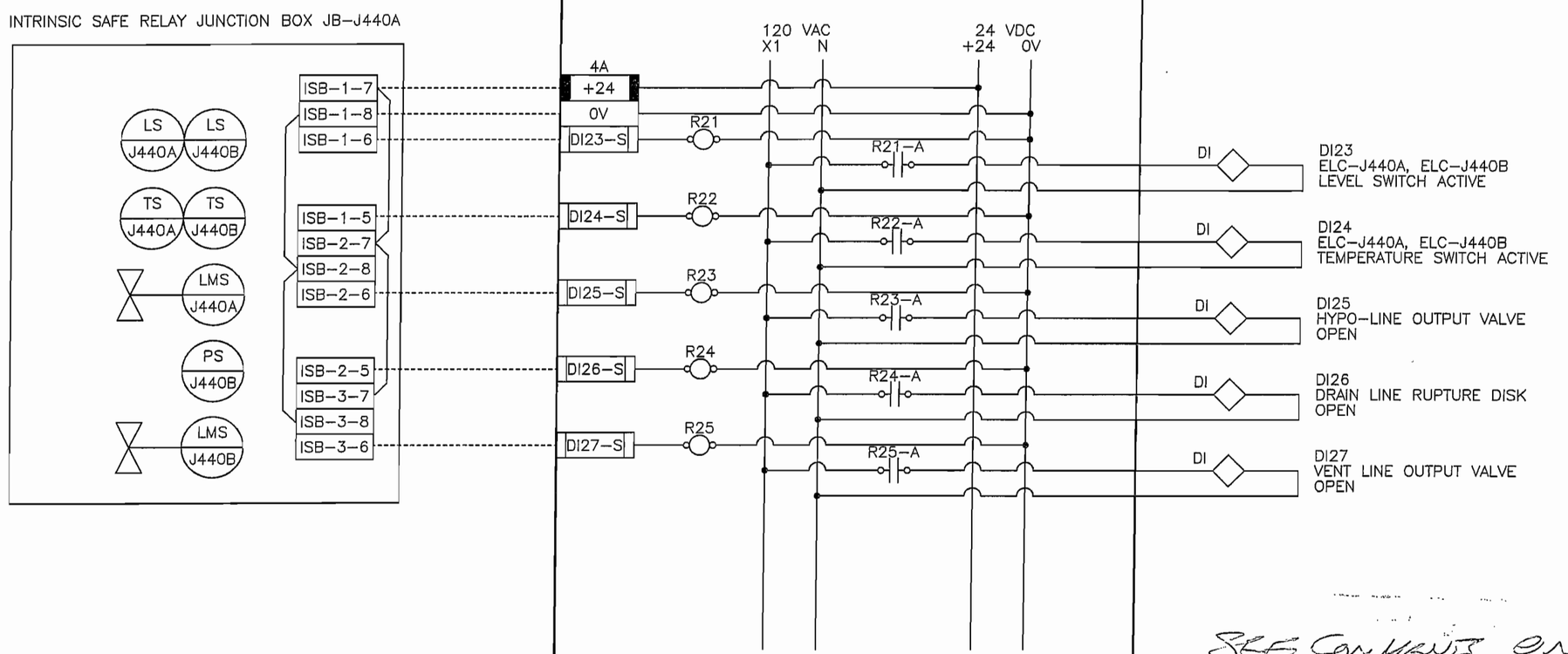

SEE COMMENTS ON PREVIOUS DRAWINGS.

NOTE:

PROVINCE OF MANITOBA
R.C.P KOST
08/22/06
REGISTERED PROFESSIONAL ENGINEER

MANCO CONTROL SYSTEMS INC.

METCON SALES & ENGINEERING LIMITED

DATE	DESCRIPTION	BY	REV.
08/21/06	ISSUED FOR APPROVALS	C.S.	01

Winnipeg

THE CITY OF WINNIPEG
WATER TREATMENT PLANT
SODIUM HYPOCHLORITE GENERATING SYSTEM

SODIUM HYPOCHLORITE GENERATOR EL-J440
INTRINSIC SAFE RELAY JUNCTION BOX JB-J440A

SCALE NTS
DATE 07/31/06
DES CTS DWN CTS
CKD CKD APP APP

DRAWING NO.
M5472-26

Saved by C. SCHACHT 08-21-06 15:15

Earth Tech (Canada) Inc.

Reviewed for general conformance with design intent. Responsibility for detailed design in the shop drawings rests with the Contractor.

Responsibility for verification and correlation of field dimensions, fabrication process, techniques of construction, installation and coordination of all parts of the work rests with the Contractor.

REVIEWED _____

REVIEWED AS MODIFIED ✓

REVISE AND RE-SUBMIT _____

NOT REVIEWED _____

Project No. C28/16/79536

Date: 15/9/06 By: [illegible]

INSTRUMENT LOOP DIAGRAM

LOOP NO. J450A

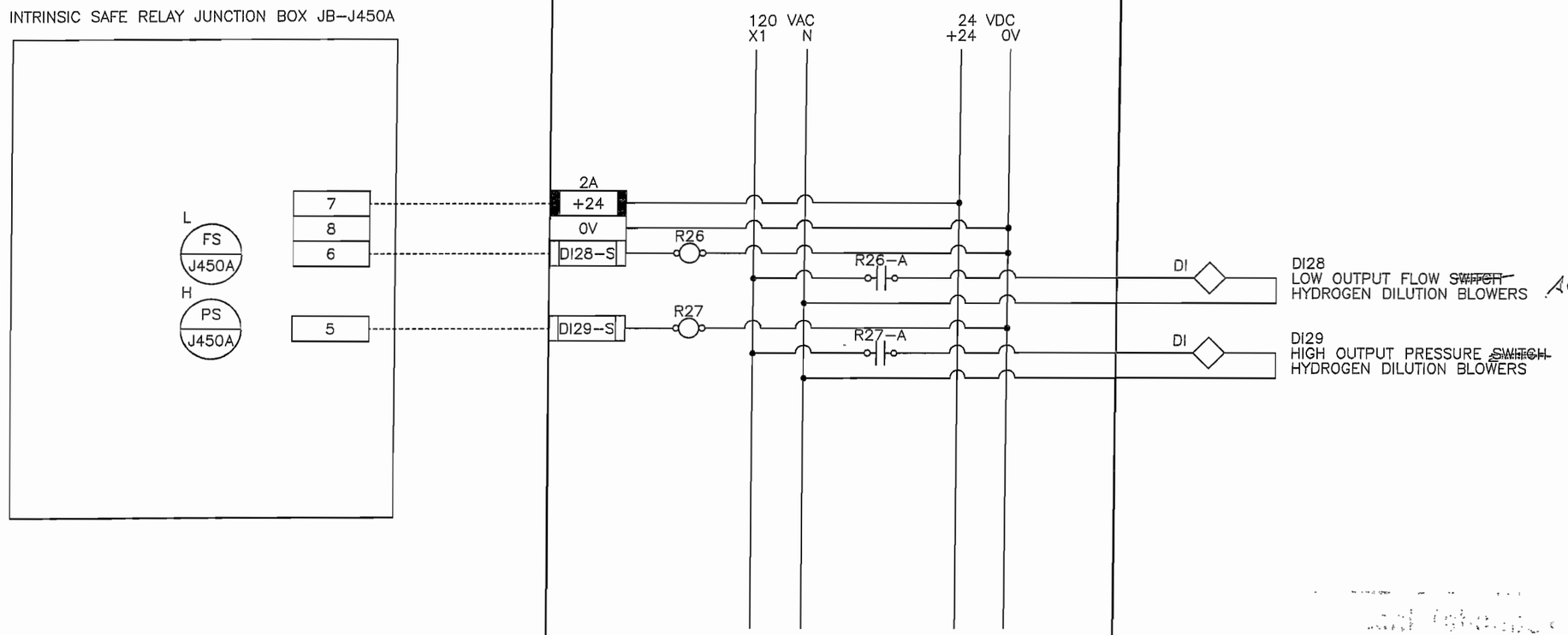

NOTE:

PROVINCE OF MANITOBA
R.C.P KOST
08/22/06
REGISTERED PROFESSIONAL ENGINEER

MSI MANCO CONTROL SYSTEMS INC.

METCON SALES & ENGINEERING LIMITED

DATE	DESCRIPTION	BY	REV.
08/21/06	ISSUED FOR APPROVALS	C.S.	01

Winnipeg

THE CITY OF WINNIPEG
WATER TREATMENT PLANT
SODIUM HYPOCHLORITE GENERATING SYSTEM

HYDROGEN DILUTION STACK BLOWERS
INTRINSIC SAFE RELAY JUNCTION BOX JB-J450A

SCALE NTS
DATE 08/01/06
DES CTS DWN CTS
CKD CKD APP APP

DRAWING NO.
M5472-27

Saved by C. SCHACHT 08-21-06 15:18

Earth Tech (Canada) Inc.

Reviewed for general conformance with design intent. Responsibility for detailed design in the shop drawings rests with the Contractor.

Responsibility for verification and correlation of field dimensions, fabrication process, techniques of construction, installation and coordination of all parts of the work rests with the Contractor.

REVIEWED _____

REVIEWED AS MODIFIED ✓

REVISE AND RE-SUBMIT _____

NOT REVIEWED _____

Project No. C28/16/79538

Date: 15/9/06 By: M. Taylor

INSTRUMENT LOOP DIAGRAM

LOOP NO. J450A

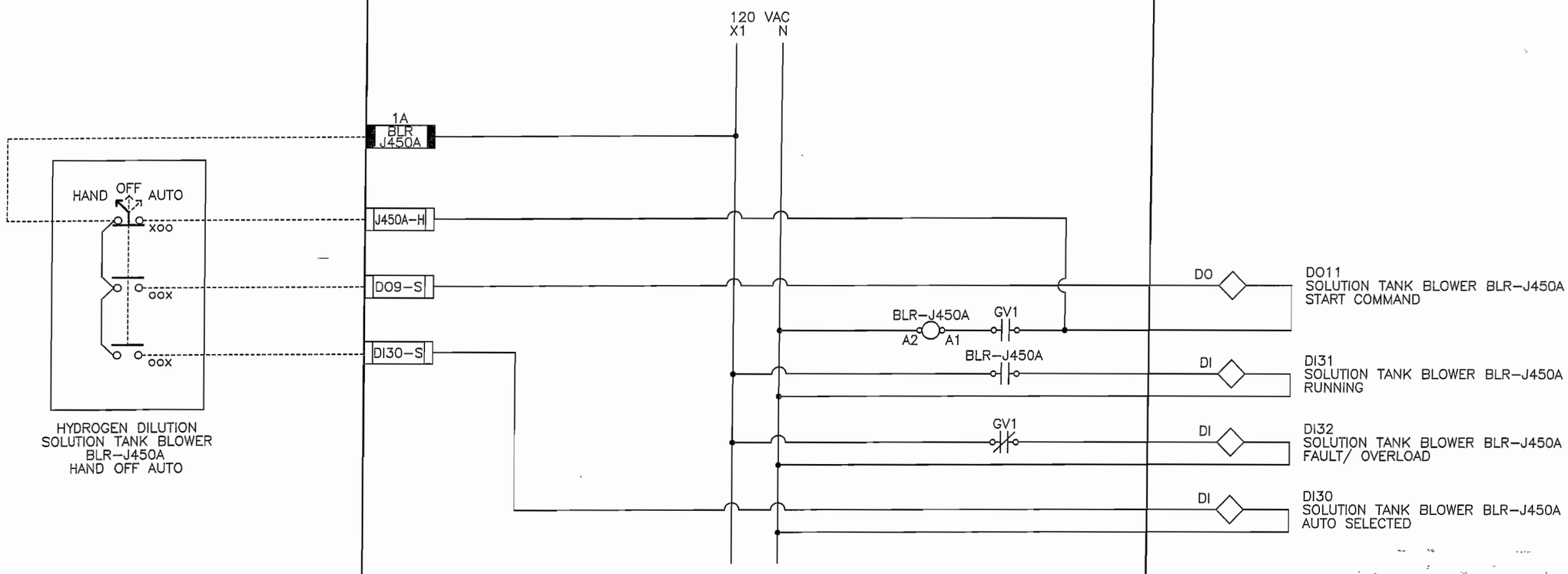

NOTE:

PROVINCE OF MANITOBA
R.C.P KOST
08/22/06
REGISTERED PROFESSIONAL ENGINEER

MANCO CONTROL SYSTEMS INC.

METCON SALES & ENGINEERING LIMITED

DATE	DESCRIPTION	BY	REV.
08/21/06	ISSUED FOR APPROVALS	C.S.	01

Winnipeg

THE CITY OF WINNIPEG
WATER TREATMENT PLANT
SODIUM HYPOCHLORITE GENERATING SYSTEM

HYDROGEN DILUTION
STACK BLOWER BLR-J450A

SCALE NTS
DATE 08/01/06
DES CTS DWN CTS
CKD CKD APP APP

DRAWING NO.
M5472-28

Saved by C. SCHACHT 08-21-06 15:18

Earth Tech (Canada) Inc.

Reviewed for general conformance with design intent. Responsibility for detailed design in the shop drawings rests with the Contractor.

Responsibility for verification and correlation of field dimensions, fabrication process, techniques of construction, installation and coordination of all parts of the work rests with the Contractor.

REVIEWED ✓

REVIEWED AS MODIFIED

REVISE AND RE-SUBMIT

NOT REVIEWED

Project No. C28/16/79838

Date: 15/9/06 By: M. [illegible]

INSTRUMENT LOOP DIAGRAM

LOOP NO. J450B

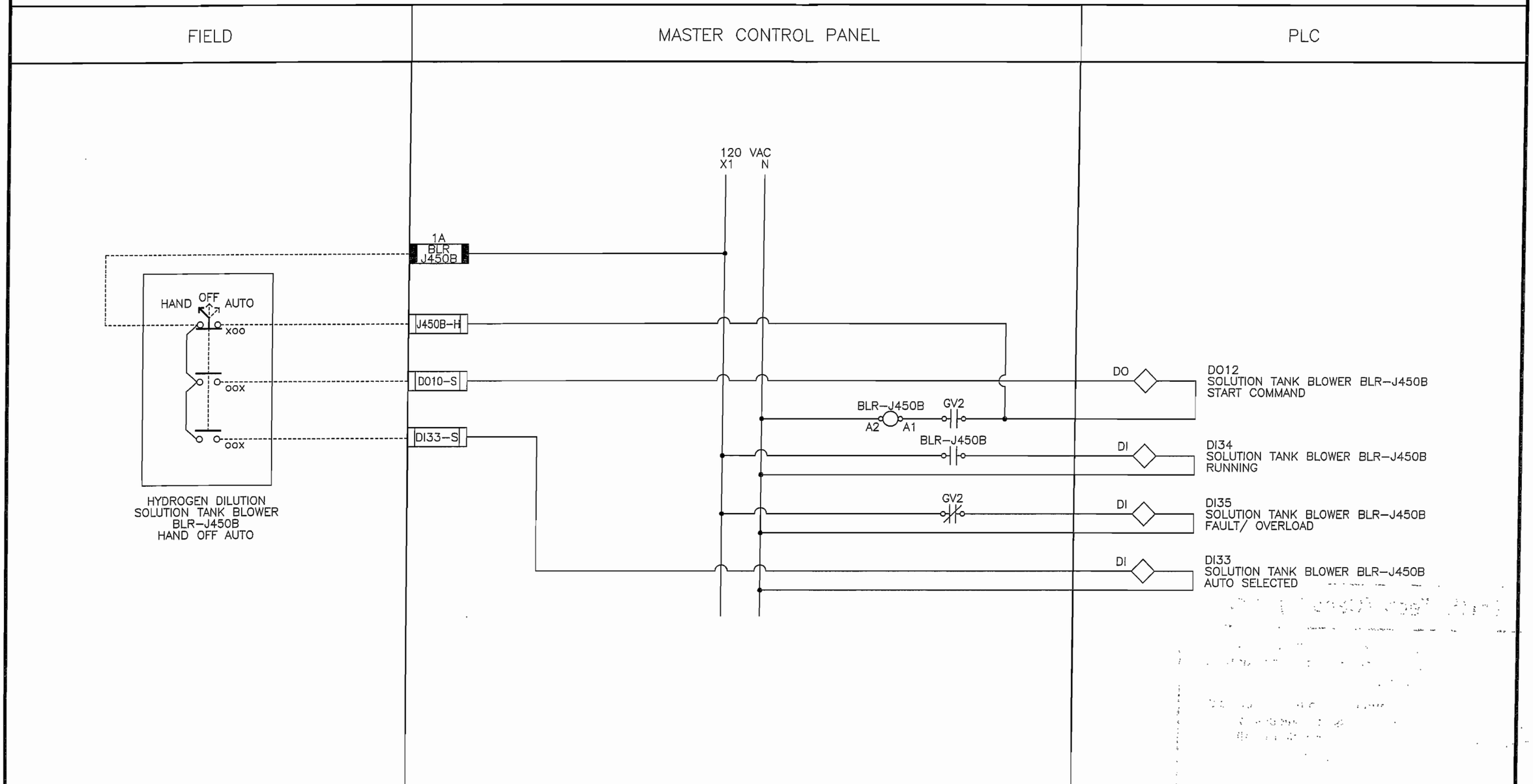

NOTE:

PROVINCE OF MANITOBA
R.C.P
KOST
08/22/06
REGISTERED PROFESSIONAL ENGINEER

MANCO CONTROL SYSTEMS INC.

METCON SALES & ENGINEERING LIMITED

DATE	DESCRIPTION	BY	REV.
08/21/06	ISSUED FOR APPROVALS	C.S.	01

Winnipeg

THE CITY OF WINNIPEG

WATER TREATMENT PLANT

SODIUM HYPOCHLORITE GENERATING SYSTEM

HYDROGEN DILUTION STACK BLOWER BLR-J450B

SCALE NTS
DATE 08/01/06
DES CTS DWN CTS
CKD CKD APP APP

DRAWING NO.
M5472-29

Saved by C. SCHACHT 08-21-06 15:19

Earth Tech (Canada) Inc.

Reviewed for general conformance with design intent. Responsibility for detailed design in the shop drawings rests with the Contractor.

Responsibility for verification and correlation of field dimensions, fabrication process, techniques of construction, installation and coordination of all parts of the work rests with the Contractor.

REVIEWED ✓

REVIEWED AS MODIFIED

REVISE AND RE-SUBMIT

NOT REVIEWED

Project No. C28/16/79538

Date: 15/9/06 By: [signature]

INSTRUMENT LOOP DIAGRAM

LOOP NO. J500A

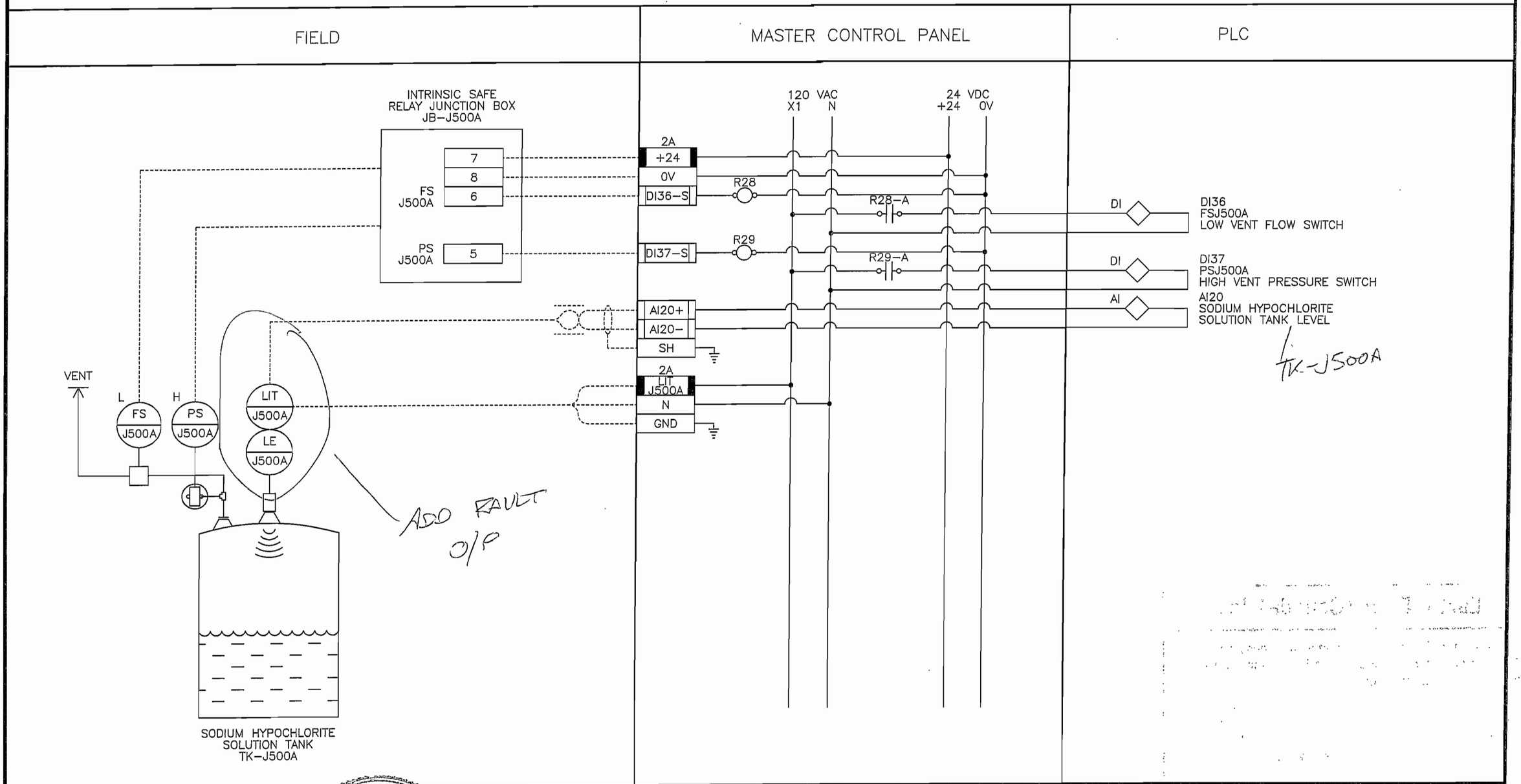

NOTE:

PROVINCE OF MANITOBA
R.C.P
KOST
08/22/06
REGISTERED PROFESSIONAL ENGINEER

MANCO CONTROL SYSTEMS INC.

METCON SALES & ENGINEERING LIMITED

DATE	DESCRIPTION	BY	REV.
08/21/06	ISSUED FOR APPROVALS	C.S.	01

Winnipeg

THE CITY OF WINNIPEG
WATER TREATMENT PLANT
SODIUM HYPOCHLORITE
GENERATING SYSTEM

SODIUM HYPOCHLORITE SOLUTION TANK
~~INTRINSIC SAFE RELAY JUNCTION BOX JB–J500A~~

NOT JUST I/S JB.

SCALE NTS
DATE 08/01/06
DES CTS DWN CTS
CKD CKD APP APP

DRAWING NO.
M5472–30

Saved by C. SCHACHT 08–21–06 15:20

Earth Tech (Canada) Inc.

Reviewed for general conformance with design intent. Responsibility for detailed design in the shop drawings rests with the Contractor.

Responsibility for verification and correlation of field dimensions, fabrication process, techniques of construction, installation and coordination of all parts of the work rests with the Contractor.

REVIEWED _____

REVIEWED AS MODIFIED ✓

REVISE AND RE-SUBMIT _____

NOT REVIEWED _____

Project No. 22861 79538

Date: 15/9/06 By: M. [illegible]

INSTRUMENT LOOP DIAGRAM

LOOP NO. J500A

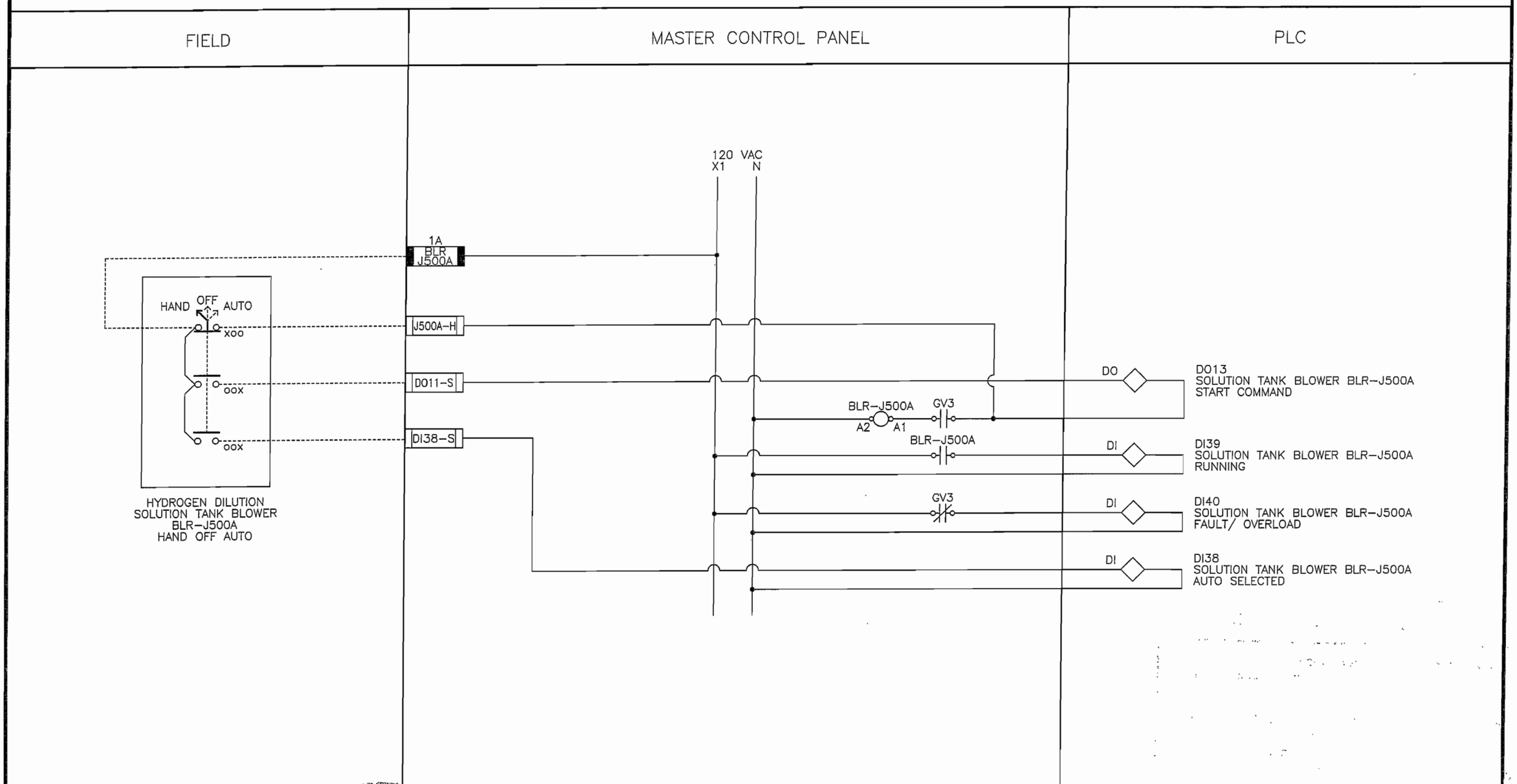

NOTE:

PROVINCE OF MANITOBA
R.C.P KOST
08/22/06
REGISTERED PROFESSIONAL ENGINEER

MANCO CONTROL SYSTEMS INC.

METCON SALES & ENGINEERING LIMITED

DATE	DESCRIPTION	BY	REV.
08/21/06	ISSUED FOR APPROVALS	C.S.	01

Winnipeg

THE CITY OF WINNIPEG

WATER TREATMENT PLANT

SODIUM HYPOCHLORITE GENERATING SYSTEM

HYDROGEN DILUTION
SOLUTION TANK BLOWER BLR-J500A

SCALE NTS
DATE 08/01/06
DES CTS DWN CTS
CKD CKD APP APP

DRAWING NO.
M5472-31

Saved by C. SCHACHT 08-21-06 15:20

Earth Tech (Canada) Inc.

Reviewed for general conformance with design intent. Responsibility for detailed design in the shop drawings rests with the Contractor.

Responsibility for verification and correlation of field dimensions, fabrication process, techniques of construction, installation and coordination of all parts of the work rests with the Contractor.

REVIEWED ✓

REVIEWED AS MODIFIED

REVISE AND RE-SUBMIT

NOT REVIEWED

Project No. 028/16/79538

Date: 15/9/06 By: M. [illegible]

INSTRUMENT LOOP DIAGRAM

LOOP NO. J500B

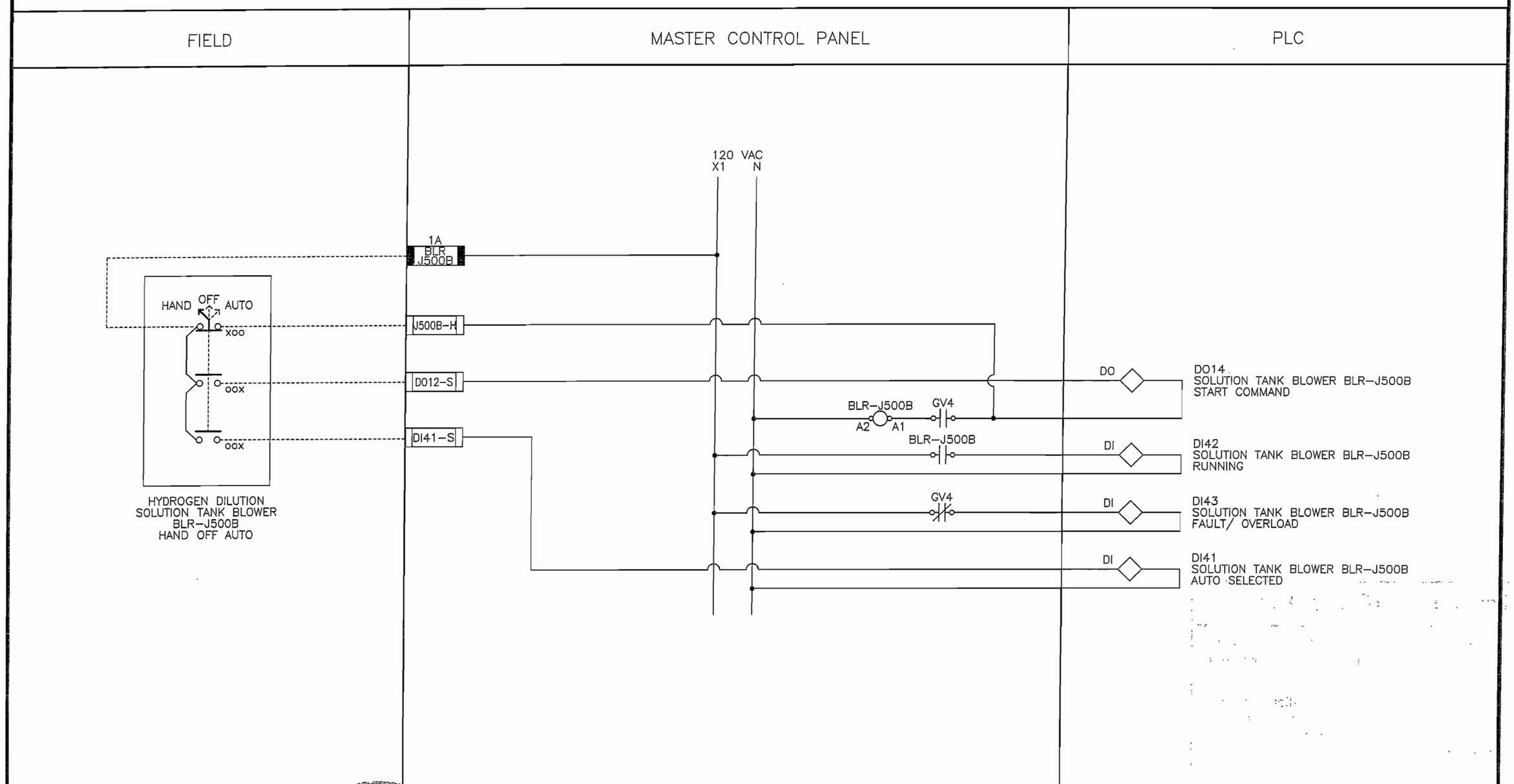

NOTE:

PROVINCE OF MANITOBA
R.C.P
KOST
08/22/06
REGISTERED PROFESSIONAL ENGINEER

MANCO CONTROL SYSTEMS INC.

METCON SALES & ENGINEERING LIMITED

DATE	DESCRIPTION	BY	REV.
08/21/06	ISSUED FOR APPROVALS	C.S.	01

Winnipeg

THE CITY OF WINNIPEG

WATER TREATMENT PLANT

SODIUM HYPOCHLORITE GENERATING SYSTEM

HYDROGEN DILUTION
SOLUTION TANK BLOWER BLR-J500B

SCALE NTS
DATE 08/01/06
DES CTS DWN CTS
CKD CKD APP APP

DRAWING NO.
M5472-32

Saved by C. SCHACHT 08-21-06 15:22

Earth Tech (Canada) Inc.

Reviewed for general conformance with design intent. Responsibility for detailed design in the shop drawings rests with the Contractor.

Responsibility for verification and correlation of field dimensions, fabrication process, techniques of construction, installation and coordination of all parts of the work rests with the Contractor.

REVIEWED ✓

REVIEWED AS MODIFIED

REVISE AND RE-SUBMIT

NOT REVIEWED

Project No. C28/16/79538

Date: 15/9/06 By: M. Toula

INSTRUMENT LOOP DIAGRAM

LOOP NO. J520A

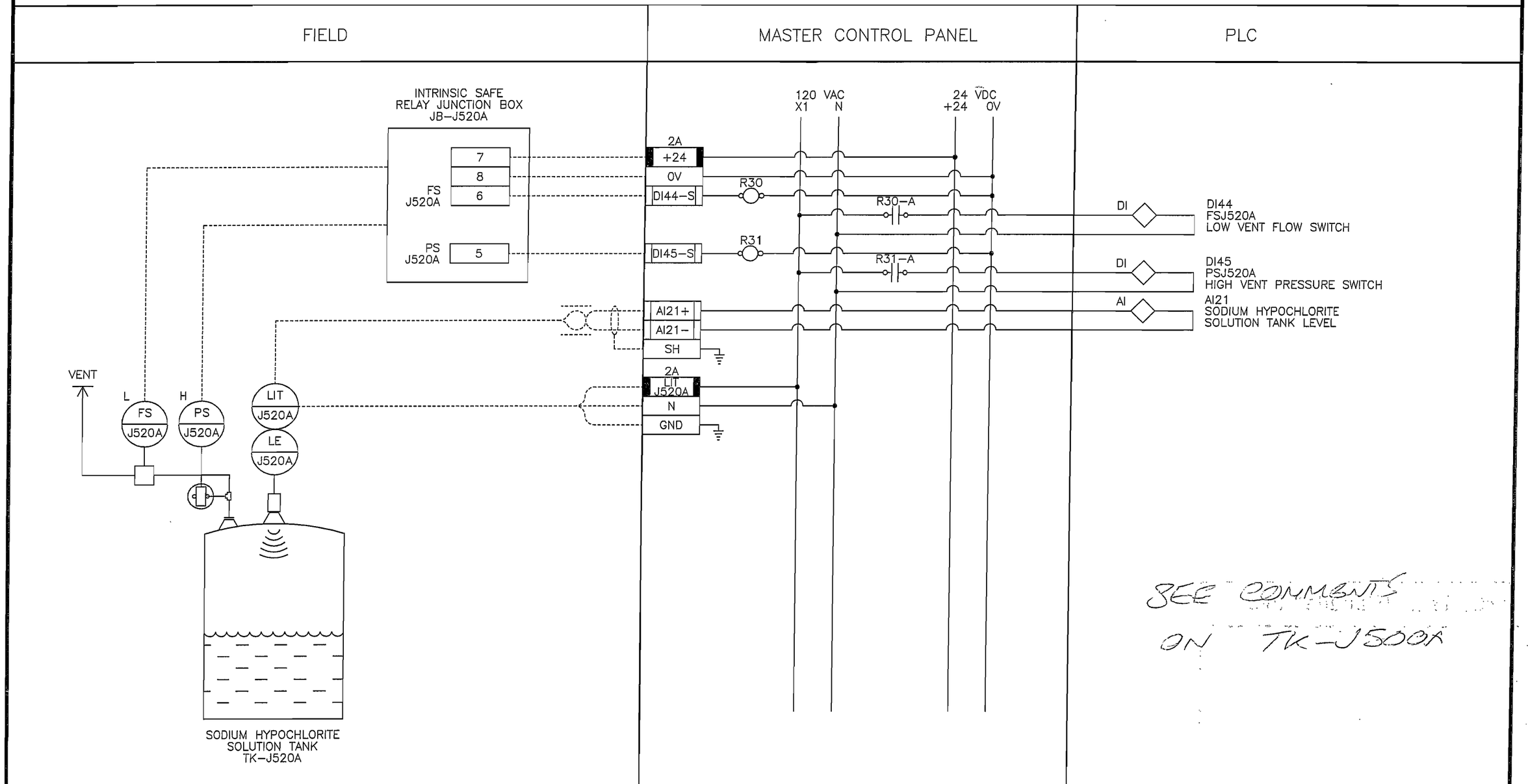

NOTE:

PROVINCE OF MANITOBA
R.C.P
KOST
08/22/06
REGISTERED PROFESSIONAL ENGINEER

MANCO CONTROL SYSTEMS INC.

METCON SALES & ENGINEERING LIMITED

DATE	DESCRIPTION	BY	REV.
08/21/06	ISSUED FOR APPROVALS	C.S.	01

Winnipeg

THE CITY OF WINNIPEG
WATER TREATMENT PLANT
SODIUM HYPOCHLORITE
GENERATING SYSTEM

SODIUM HYPOCHLORITE SOLUTION TANK
INTRINSIC SAFE RELAY JUNCTION BOX JB–J520A

SCALE NTS
DATE 08/01/06
DES CTS DWN CTS
CKD CKD APP APP

DRAWING NO.
M5472–33

Saved by C. SCHACHT 08–21–06 15:23

Earth Tech (Canada) Inc.

Reviewed for general conformance with design intent. Responsibility for detailed design in the shop drawings rests with the Contractor.

Responsibility for verification and correlation of field dimensions, fabrication process, techniques of construction, installation and coordination of all parts of the work rests with the Contractor.

REVIEWED _____

REVIEWED AS MODIFIED ✓

REVISE AND RE-SUBMIT _____

NOT REVIEWED _____

Project No. C28/16/74538

Date: 15/9/06 By: M. Jones

INSTRUMENT LOOP DIAGRAM

LOOP NO. J520A

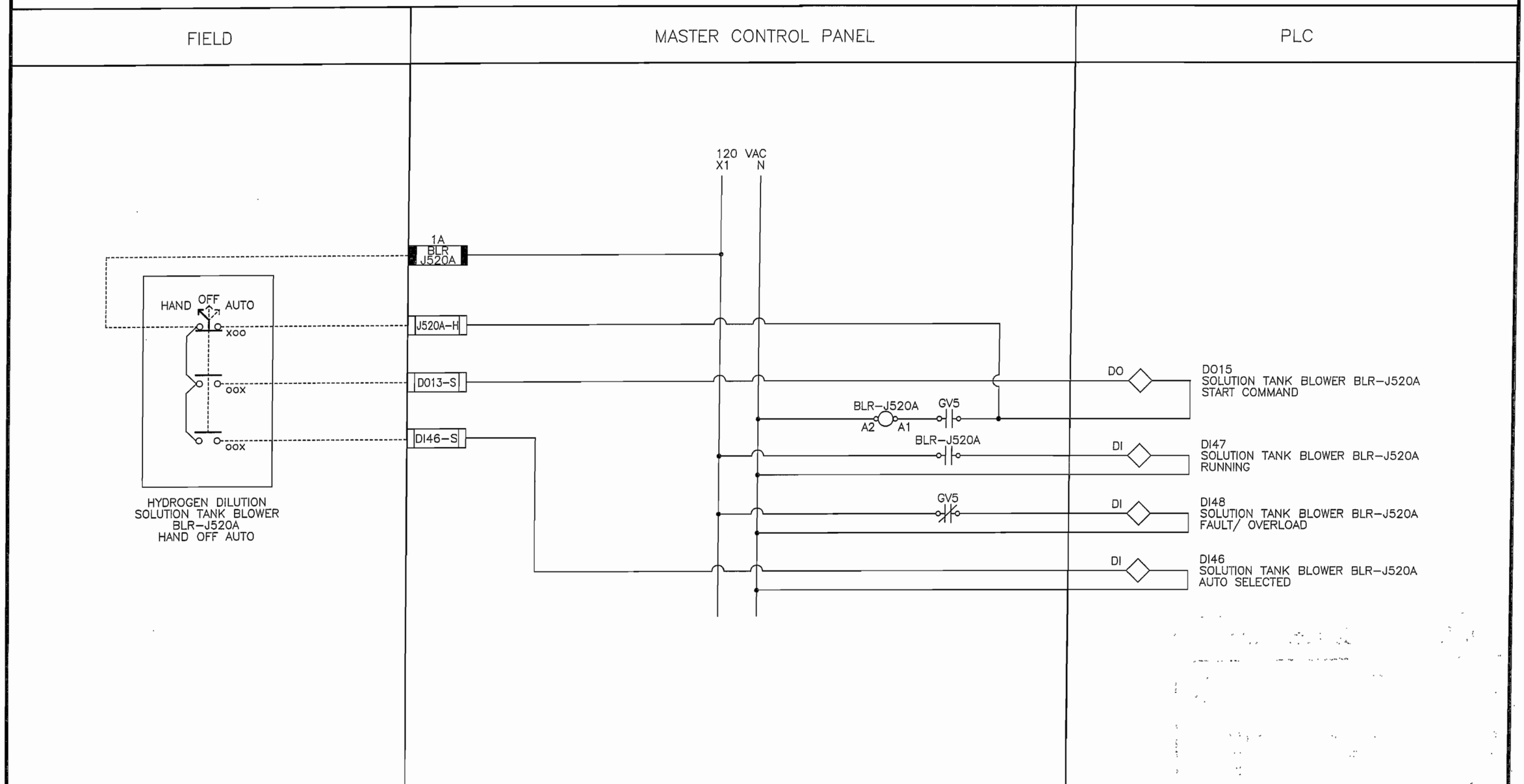

NOTE:

PROVINCE OF MANITOBA
R.C.P
KOST
08/22/06
REGISTERED PROFESSIONAL ENGINEER

MANCO CONTROL SYSTEMS INC.

METCON SALES & ENGINEERING LIMITED

DATE	DESCRIPTION	BY	REV.
08/21/06	ISSUED FOR APPROVALS	C.S.	01

Winnipeg

THE CITY OF WINNIPEG
WATER TREATMENT PLANT
SODIUM HYPOCHLORITE GENERATING SYSTEM

HYDROGEN DILUTION
SOLUTION TANK BLOWER BLR-J520A

SCALE NTS
DATE 08/01/06
DES CTS DWN CTS
CKD CKD APP APP

DRAWING NO.
M5472-34

Saved by C. SCHACHT 08-21-06 15:24

Earth Tech (Canada) Inc.

Reviewed for general conformance with design intent. Responsibility for detailed design in the shop drawings rests with the Contractor.

Responsibility for verification and correlation of field dimensions, fabrication process, techniques of construction, installation and coordination of all parts of the work rests with the Contractor.

REVIEWED ✓

REVIEWED AS MODIFIED

REVISE AND RE-SUBMIT

NOT REVIEWED

Project No. C28/16/74838

Date: 18/9/06 By: [illegible]

INSTRUMENT LOOP DIAGRAM

LOOP NO. J520B

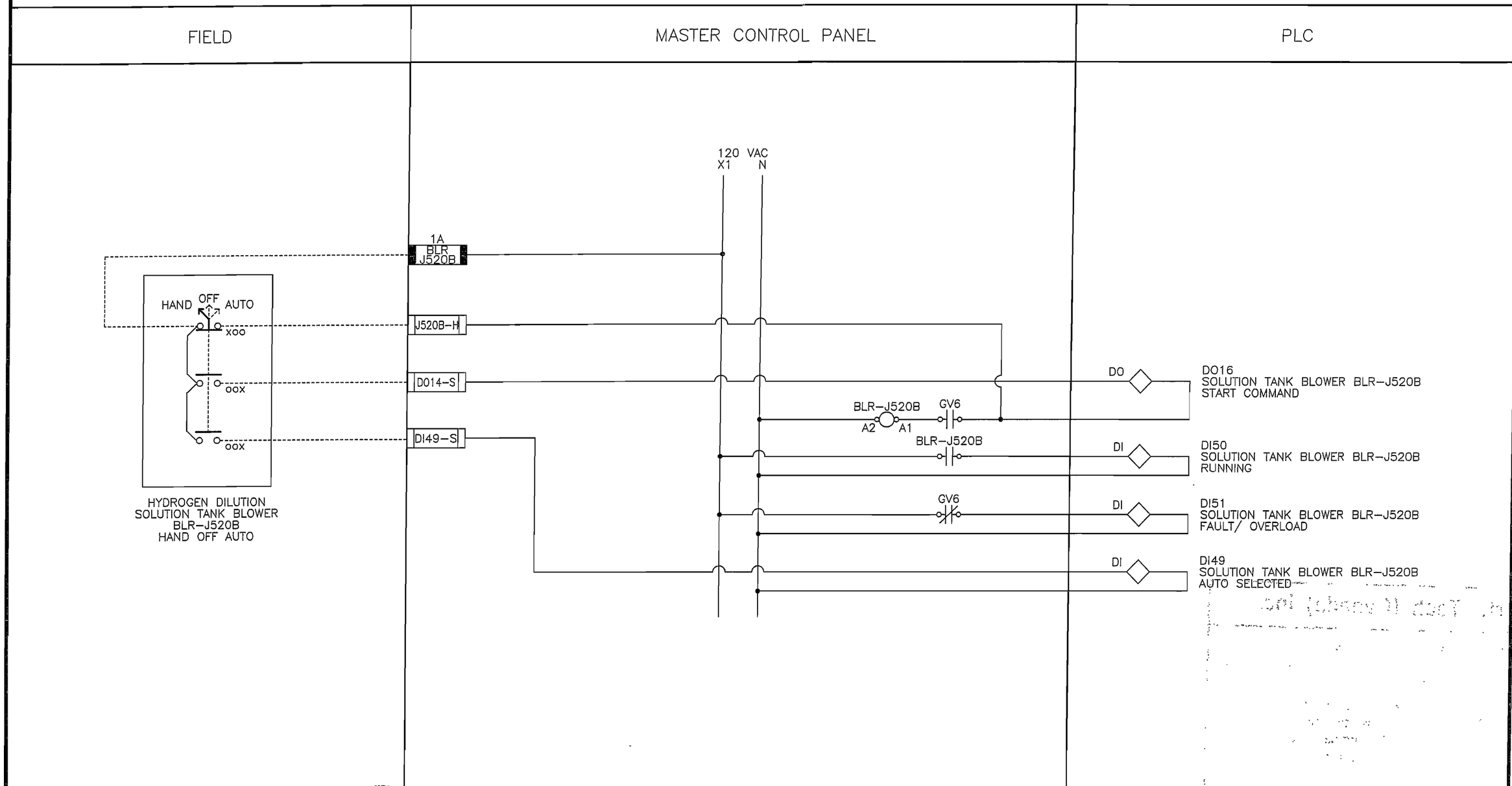

NOTE:

PROVINCE OF MANITOBA
R.C.P KOST
08/22/06
REGISTERED PROFESSIONAL ENGINEER

MANCO CONTROL SYSTEMS INC.

METCON SALES & ENGINEERING LIMITED

DATE	DESCRIPTION	BY	REV.
08/21/06	ISSUED FOR APPROVALS	C.S.	01

Winnipeg

THE CITY OF WINNIPEG
WATER TREATMENT PLANT
SODIUM HYPOCHLORITE GENERATING SYSTEM

HYDROGEN DILUTION
SOLUTION TANK BLOWER BLR-J520B

SCALE NTS
DATE 08/01/06
DES CTS DWN CTS
CKD CKD APP APP

DRAWING NO.
M5472-35

Saved by C. SCHACHT 08-21-06 15:27

Earth Tech (Canada) Inc.

Reviewed for general conformance with design intent. Responsibility for detailed design in the shop drawings rests with the Contractor.

Responsibility for verification and correlation of field dimensions, fabrication process, techniques of construction, installation and coordination of all parts of the work rests with the Contractor.

REVIEWED ✓

REVIEWED AS MODIFIED

REVISE AND RE-SUBMIT

NOT REVIEWED

Project No. C28/16/79538

Date: 15/9/06 By: M. Farlow

INSTRUMENT LOOP DIAGRAM

LOOP NO. J540A

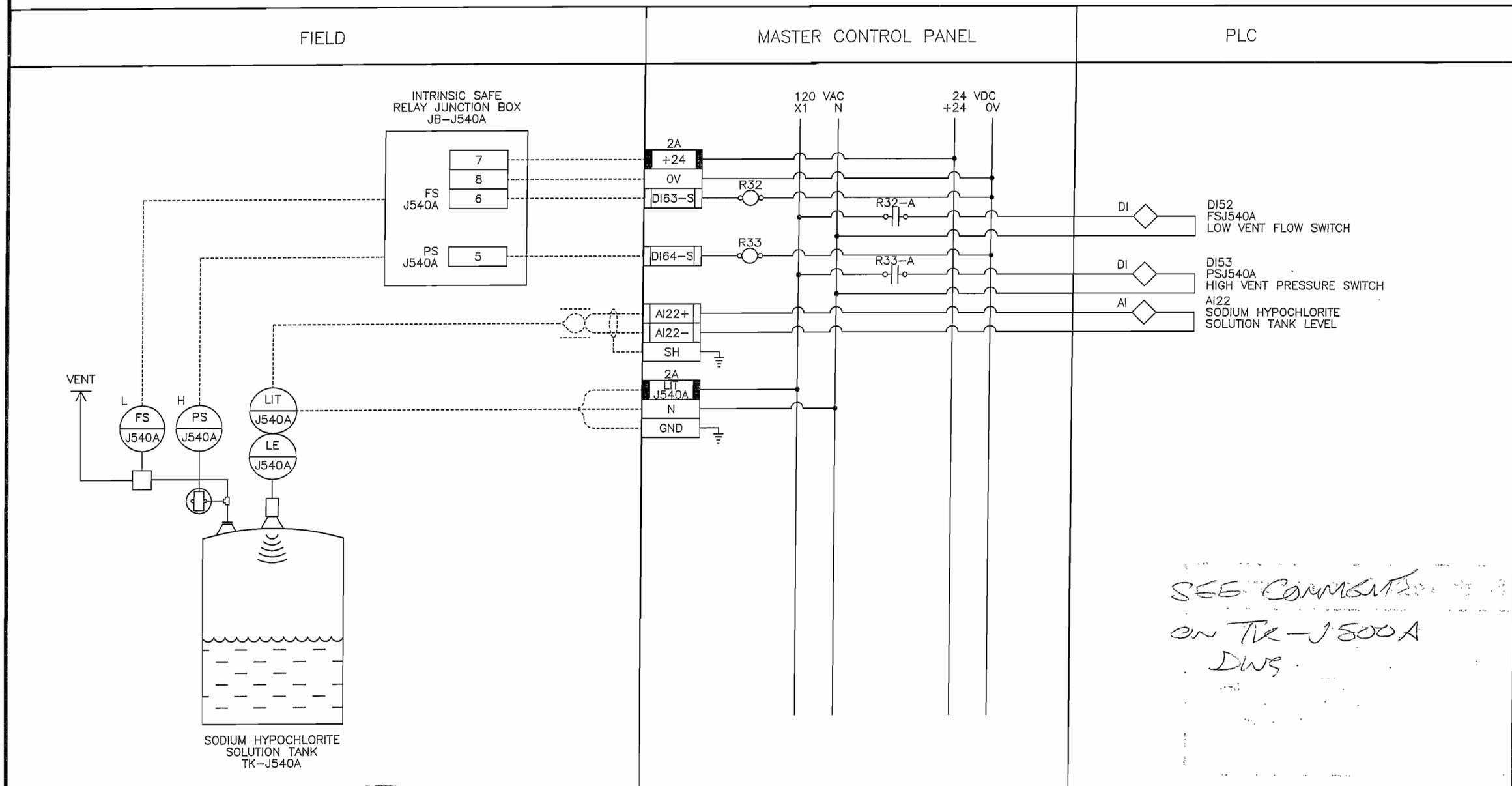

SEE COMMENTS ON TK-J500A DWG

NOTE:

PROVINCE OF MANITOBA
R.C.P KOST
08/22/06
REGISTERED PROFESSIONAL ENGINEER

MANCO CONTROL SYSTEMS INC.

METCON SALES & ENGINEERING LIMITED

DATE	DESCRIPTION	BY	REV.
08/21/06	ISSUED FOR APPROVALS	C.S.	01

Winnipeg

THE CITY OF WINNIPEG
WATER TREATMENT PLANT
SODIUM HYPOCHLORITE GENERATING SYSTEM

SODIUM HYPOCHLORITE SOLUTION TANK
INTRINSIC SAFE RELAY JUNCTION BOX JB-J540A

SCALE NTS
DATE 08/01/06
DES CTS DWN CTS
CKD CKD APP APP

DRAWING NO.
M5472-36

Saved by C. SCHACHT 08-21-06 15:27

Earth Tech (Canada) Inc.

Reviewed for general conformance with design intent. Responsibility for detailed design in the shop drawings rests with the Contractor.

Responsibility for verification and correlation of field dimensions, fabrication process, techniques of construction, installation and coordination of all parts of the work rests with the Contractor.

REVIEWED _____

REVIEWED AS MODIFIED ✓

REVISE AND RE-SUBMIT _____

NOT REVIEWED _____

Project No. C28/16/79538

Date: 15/8/06 By: M. [illegible]

INSTRUMENT LOOP DIAGRAM

LOOP NO. J540A

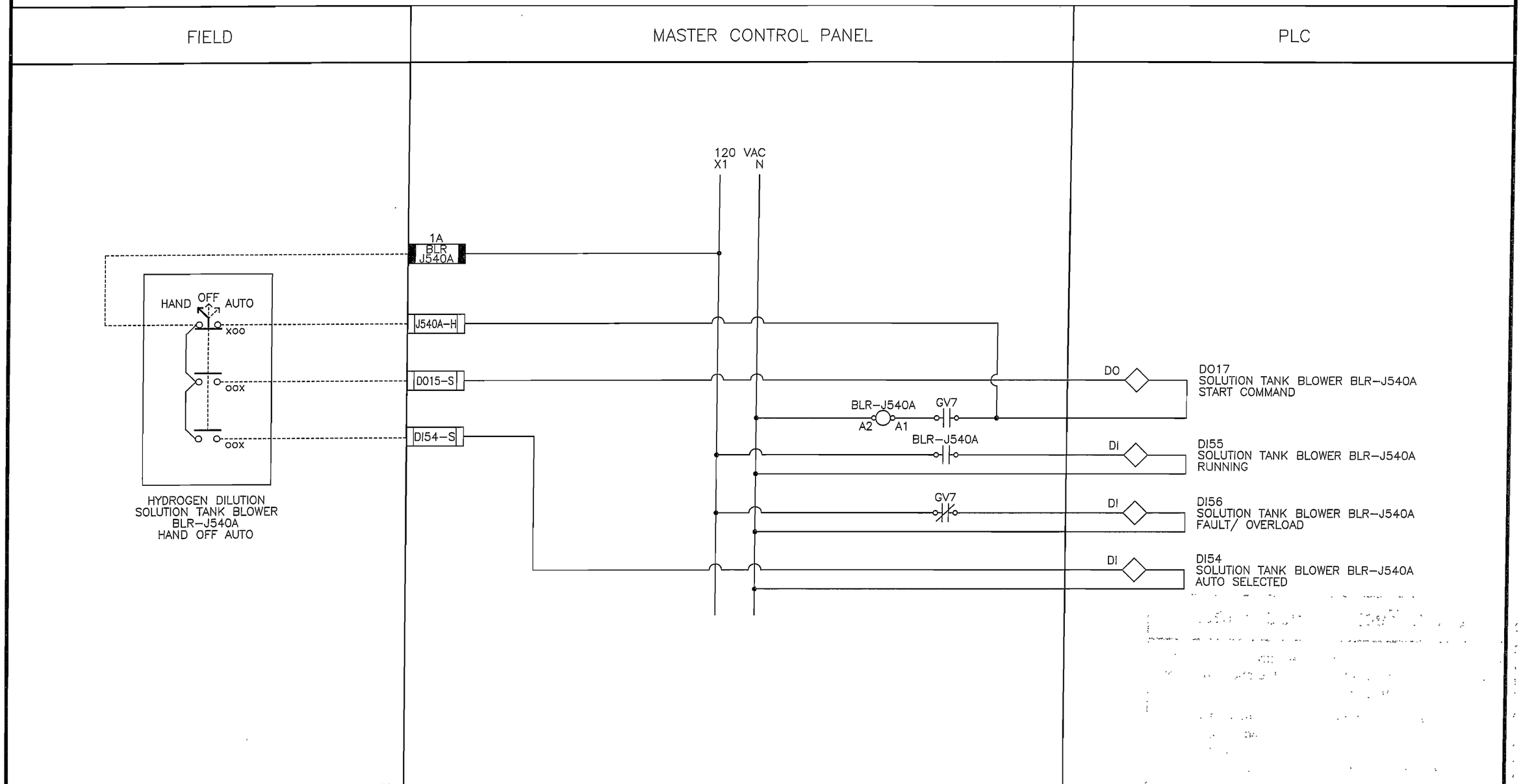

NOTE:

PROVINCE OF MANITOBA
R.C.P KOST
08/22/06
REGISTERED PROFESSIONAL ENGINEER

MANCO CONTROL SYSTEMS INC.

METCON SALES & ENGINEERING LIMITED

DATE	DESCRIPTION	BY	REV.
08/21/06	ISSUED FOR APPROVALS	C.S.	01

Winnipeg

THE CITY OF WINNIPEG
WATER TREATMENT PLANT
SODIUM HYPOCHLORITE GENERATING SYSTEM

HYDROGEN DILUTION
SOLUTION TANK BLOWER BLR-J540A

SCALE NTS
DATE 08/01/06
DES CTS DWN CTS
CKD CKD APP APP

DRAWING NO.
M5472-37

Saved by C. SCHACHT 08-21-06 15:28

Earth Tech (Canada) Inc.

Reviewed for general conformance with design intent. Responsibility for detailed design in the shop drawings rests with the Contractor.

Responsibility for verification and correlation of field dimensions, fabrication process, techniques of construction, installation and coordination of all parts of the work rests with the Contractor.

REVIEWED ✓

REVIEWED AS MODIFIED

REVISE AND RE-SUBMIT

NOT REVIEWED

Project No. C28/16/79538

Date: 15/9/06 By: M. Foulon

INSTRUMENT LOOP DIAGRAM

LOOP NO. J540B

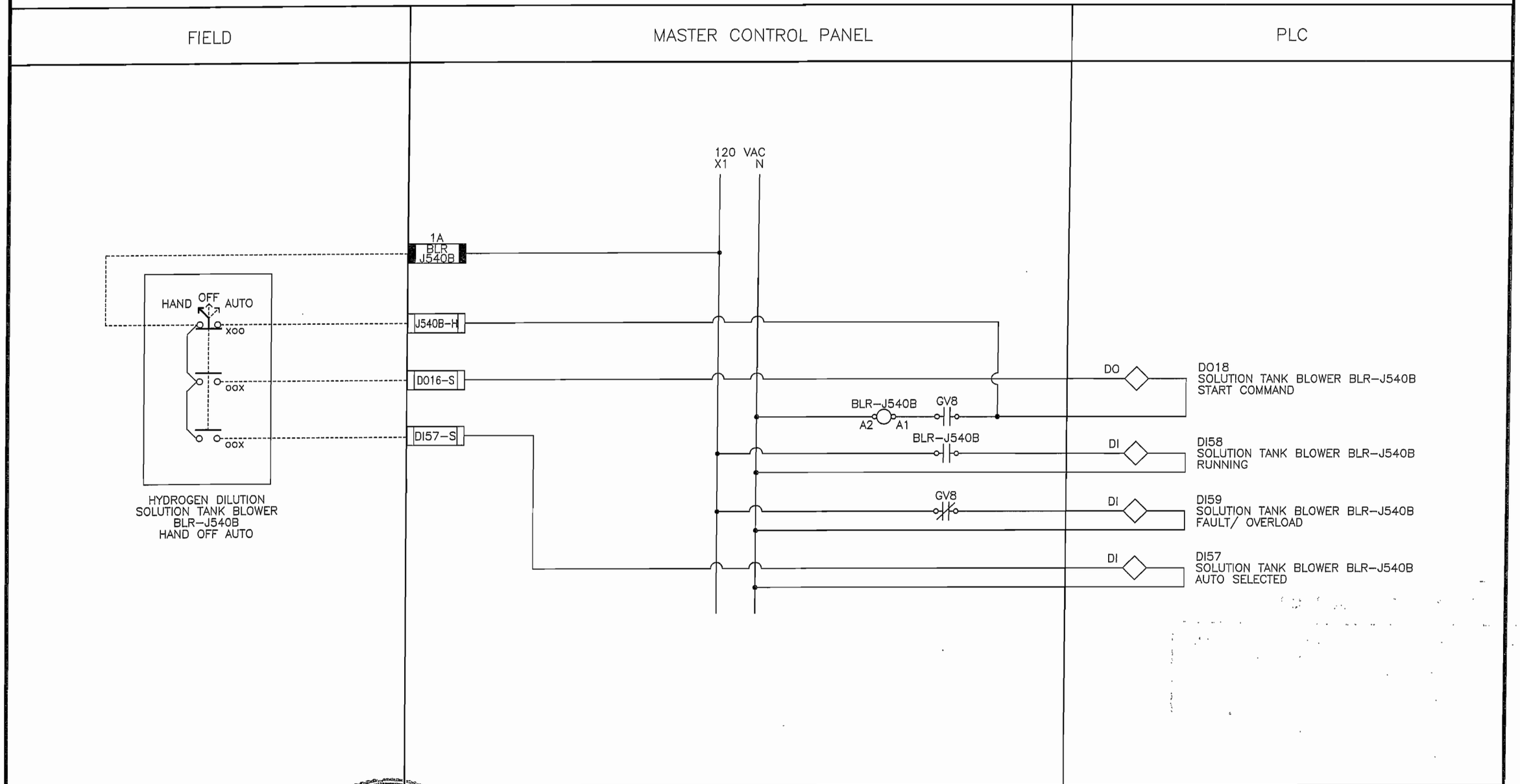

NOTE:

PROVINCE OF MANITOBA
R.C.P
KOST
08/22/06
REGISTERED PROFESSIONAL ENGINEER

MANCO CONTROL SYSTEMS INC.

METCON SALES & ENGINEERING LIMITED

DATE	DESCRIPTION	BY	REV.
08/21/06	ISSUED FOR APPROVALS	C.S.	01

Winnipeg

THE CITY OF WINNIPEG
WATER TREATMENT PLANT
SODIUM HYPOCHLORITE
GENERATING SYSTEM

HYDROGEN DILUTION
SOLUTION TANK BLOWER BLR-J540B

SCALE NTS
DATE 08/01/06
DES CTS DWN CTS
CKD CKD APP APP

DRAWING NO.
M5472-38

Saved by C. SCHACHT 08-21-06 15:29

Earth Tech (Canada) Inc.

Reviewed for general conformance with design intent. Responsibility for detailed design in the shop drawings rests with the Contractor.

Responsibility for verification and correlation of field dimensions, fabrication process, techniques of construction, installation and coordination of all parts of the work rests with the Contractor.

REVIEWED ✓

REVIEWED AS MODIFIED

REVISE AND RE-SUBMIT

NOT REVIEWED

Project No. C28/16/79538

Date: 15/9/06 By: M. Toulouse

INSTRUMENT LOOP DIAGRAM

LOOP NO. J560A

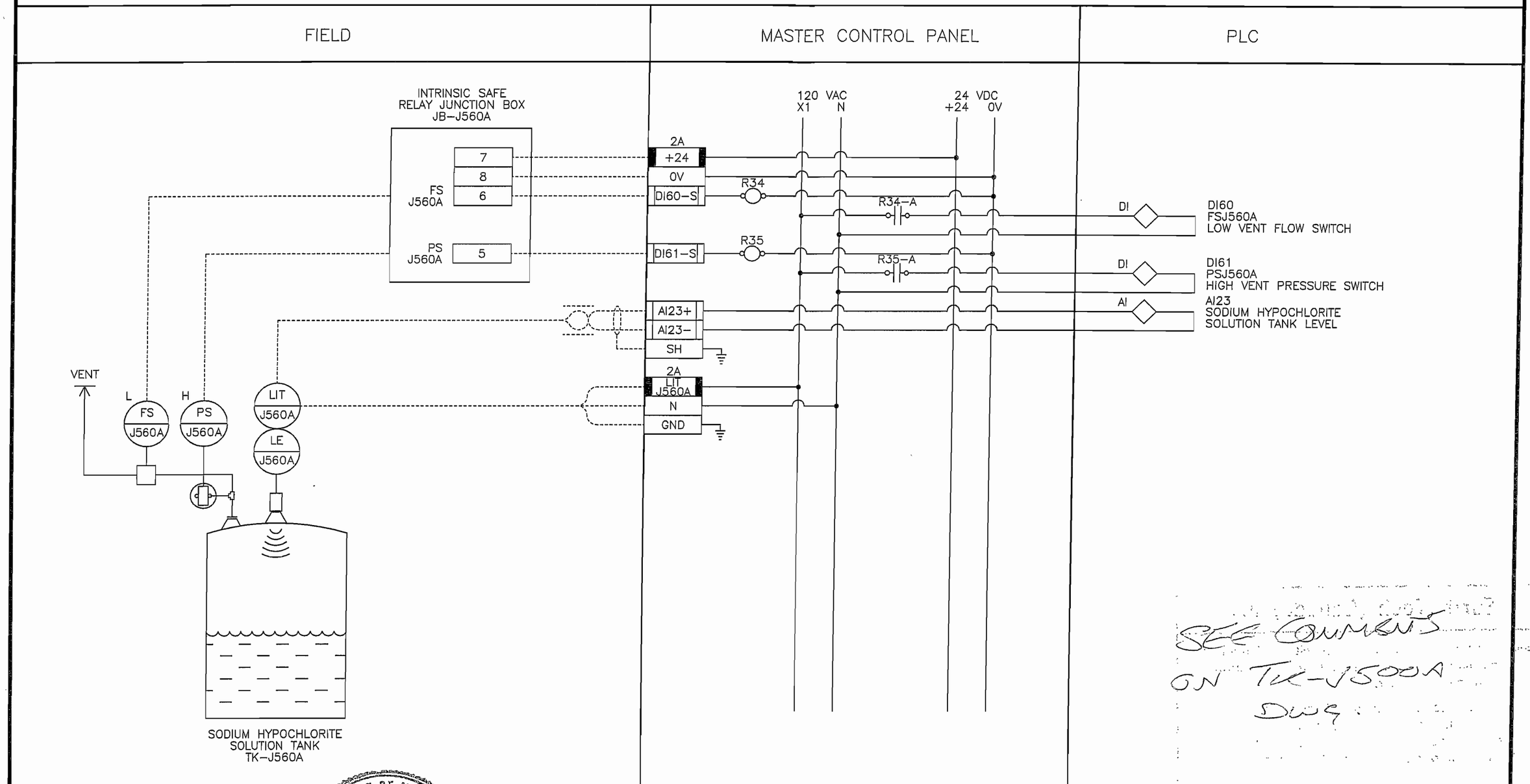

SEE COMMENTS ON TK-J5000A DWG

NOTE:

PROVINCE OF MANITOBA
R.C.P KOST
08/22/06
REGISTERED PROFESSIONAL ENGINEER

MANCO CONTROL SYSTEMS INC.

METCON SALES & ENGINEERING LIMITED

DATE	DESCRIPTION	BY	REV.
08/21/06	ISSUED FOR APPROVALS	C.S.	01

Winnipeg

THE CITY OF WINNIPEG
WATER TREATMENT PLANT
SODIUM HYPOCHLORITE GENERATING SYSTEM

SODIUM HYPOCHLORITE SOLUTION TANK
INTRINSIC SAFE RELAY JUNCTION BOX JB-J560A

SCALE NTS
DATE 08/01/06
DES CTS DWN CTS
CKD CKD APP APP

DRAWING NO.
M5472-39

Saved by C. SCHACHT 08-21-06 15:30

Earth Tech (Canada) Inc.

Reviewed for general conformance with design intent. Responsibility for detailed design in the shop drawings rests with the Contractor.

Responsibility for verification and correlation of field dimensions, fabrication process, techniques of construction, installation and coordination of all parts of the work rests with the Contractor.

REVIEWED _____

REVIEWED AS MODIFIED ✓

REVISE AND RE-SUBMIT _____

NOT REVIEWED _____

Project No. C28/16/79538

Date: 15/9/06 By: [signature]

INSTRUMENT LOOP DIAGRAM

LOOP NO. J560A

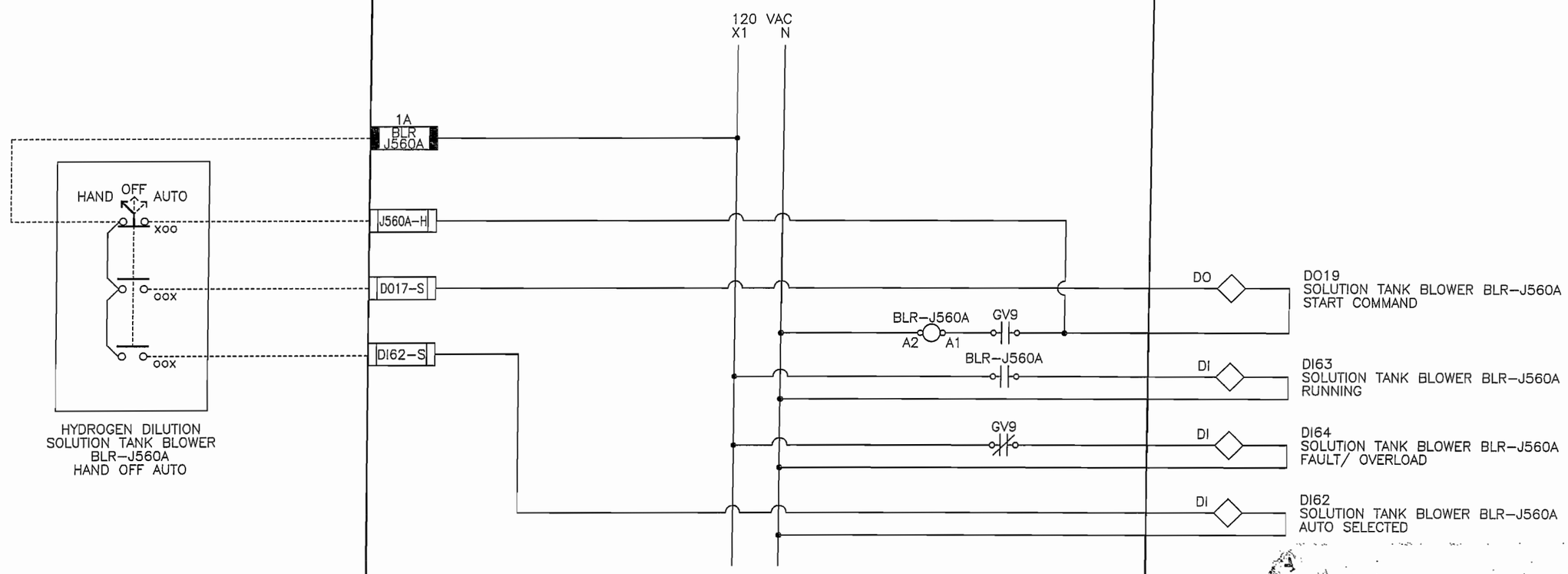

NOTE:

PROVINCE OF MANITOBA
R.C.P KOST
08/22/06
REGISTERED PROFESSIONAL ENGINEER

MANCO CONTROL SYSTEMS INC.

METCON SALES & ENGINEERING LIMITED

DATE	DESCRIPTION	BY	REV.
08/21/06	ISSUED FOR APPROVALS	C.S.	01

Winnipeg

THE CITY OF WINNIPEG
WATER TREATMENT PLANT
SODIUM HYPOCHLORITE GENERATING SYSTEM

HYDROGEN DILUTION
SOLUTION TANK BLOWER BLR-J560A

SCALE NTS
DATE 08/01/06
DES CTS DWN CTS
CKD CKD APP APP

DRAWING NO.
M5472-40

Saved by C. SCHACHT 08-21-06 15:30

Earth Tech (Canada) Inc.

Reviewed for general conformance with design intent. Responsibility for detailed design in the shop drawings rests with the Contractor.

Responsibility for verification and correlation of field dimensions, fabrication process, techniques of construction, installation and coordination of all parts of the work rests with the Contractor.

REVIEWED ✓

REVIEWED AS MODIFIED

REVISE AND RE-SUBMIT

NOT REVIEWED

Project No. C28/16/~~[illegible]~~ 79538

Date: 15/9/06 By: M. Fuller

INSTRUMENT LOOP DIAGRAM

LOOP NO. J560B

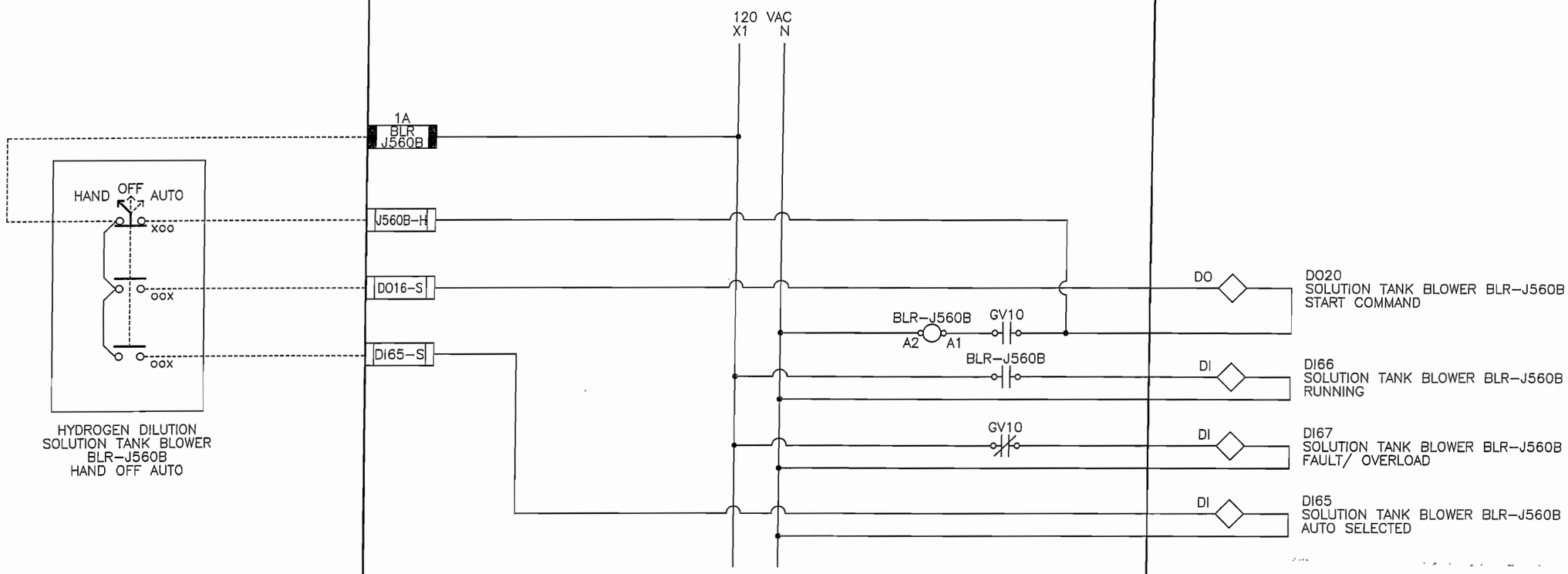

NOTE:

PROVINCE OF MANITOBA
R.C.P
KOST
08/22/06
REGISTERED PROFESSIONAL ENGINEER

MANCO CONTROL SYSTEMS INC.

METCON SALES & ENGINEERING LIMITED

DATE	DESCRIPTION	BY	REV.
08/21/06	ISSUED FOR APPROVALS	C.S.	01

Winnipeg

THE CITY OF WINNIPEG
WATER TREATMENT PLANT
SODIUM HYPOCHLORITE GENERATING SYSTEM

HYDROGEN DILUTION
SOLUTION TANK BLOWER BLR-J560B

SCALE NTS
DATE 08/01/06
DES CTS DWN CTS
CKD CKD APP APP

DRAWING NO.
M5472-41

Saved by C. SCHACHT 08-21-06 15:30

Earth Tech (Canada) Inc.

Reviewed for general conformance with design intent. Responsibility for detailed design in the shop drawings rests with the Contractor.

Responsibility for verification and correlation of field dimensions, fabrication process, techniques of construction, installation and coordination of all parts of the work rests with the Contractor.

REVIEWED ✓

REVIEWED AS MODIFIED

REVISE AND RE-SUBMIT

NOT REVIEWED

Project No. C28/16/79538

Date: 15/9/06 By: M. Yamb

INSTRUMENT LOOP DIAGRAM

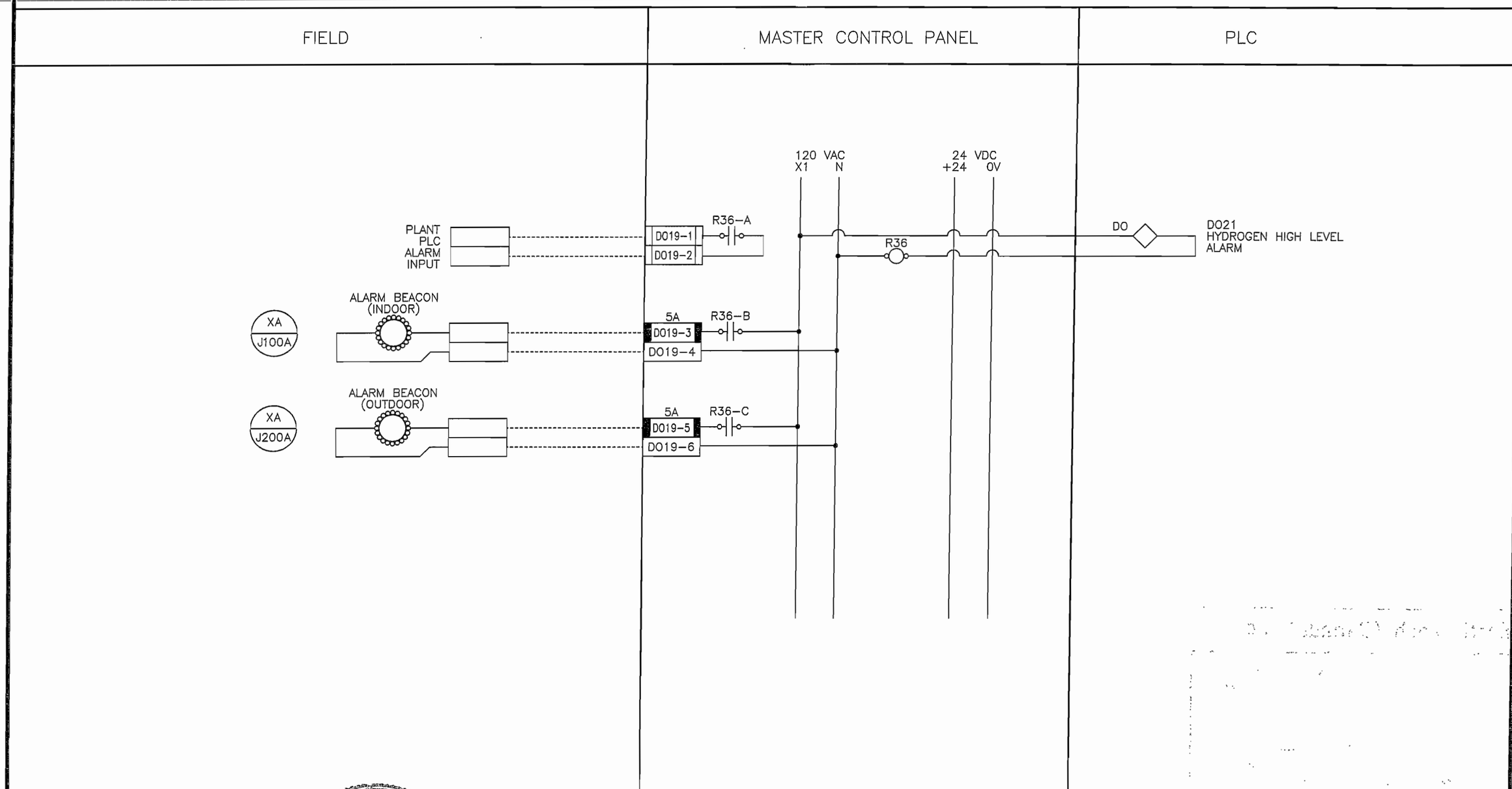

NOTE:

PROVINCE OF MANITOBA
R.C.P
KOST
08/22/06
REGISTERED PROFESSIONAL ENGINEER

MANCO CONTROL SYSTEMS INC.

METCON SALES & ENGINEERING LIMITED

DATE	DESCRIPTION	BY	REV.
08/21/06	ISSUED FOR APPROVALS	C.S.	01

Winnipeg

THE CITY OF WINNIPEG
WATER TREATMENT PLANT
SODIUM HYPOCHLORITE
GENERATING SYSTEM

HYDROGEN HIGH LEVEL ALARMS

SCALE NTS
DATE 08/02/06
DES CTS DWN CTS
CKD CKD APP APP

DRAWING NO.
M5472-42

Saved by C. SCHACHT 08-21-06 15:32

Earth Tech (Canada) Inc.

Reviewed for general conformance with design intent. Responsibility for detailed design in the shop drawings rests with the Contractor.

Responsibility for verification and correlation of field dimensions, fabrication process, techniques of construction, installation and coordination of all parts of the work rests with the Contractor.

REVIEWED ✓

REVIEWED AS MODIFIED

REVISE AND RE-SUBMIT

NOT REVIEWED

Project No. C28/16/79888

Date: 18/9/06 By: M. Tout

Date: 25/08/2006

Manco Control Systems Inc.
Bill of Materials

JOB # M - 5472

Project: COW WTP NaOCl Gen. Sys Master Control Panel

Customer: METCON

Notes: Preliminary
-

Part Number	Description	Manufacturer	Rcv	Qty	Each	Total
A-84XM7818SSN4	Enclosure	Hoffman		1	$ -	$ -
ATEN102	Disc. Sw. w/ Mechs	Square D		1	$ -	$ -
STV100K-10N	TVSS	Sola		1	$ -	$ -
GV2M07	Manual Motor Starter	Telemecanique		8	$ -	$ -
GV2M10	Manual Motor Starter	Telemecanique		2	$ -	$ -
GV2AN11	Aux. Contact	Telemecanique		10	$ -	$ -
LC1D09G7	Contactor	Telemecanique		10	$ -	$ -
2938581	Power Supply	Phoenix Contact		2	$ -	$ -
60112	Circuit Breaker	Square D		1	$ -	$ -
IE-SW8	Ethernet Switch	Weidmuller		1	$ -	$ -
8432150000	RTD Sgn Isol/Conv	Weidmuller		1	$ -	$ -
RXZE1M114	Relay Socket	Telemecanique		5	$ -	$ -
RXL4A06B2F7	Relay	Telemecanique		5	$ -	$ -
8533640000	Relay	Weidmuller		1	$ -	$ -
ABR-1S302B	Interface Relay	Telemecanique		30	$ -	$ -
9080GR6	Terminals	Square D		30	$ -	$ -
4674.6	Terminals	Weidmuller		175	$ -	$ -
1721.6	Terminals	Weidmuller		134	$ -	$ -
2227.6	Fused Terminal	Weidmuller		18	$ -	$ -
2255.6	Fused Terminal	Weidmuller		49	$ -	$ -
AGC-1	Fuse	Bussman		22	$ -	$ -
AGC-2	Fuse	Bussman		34	$ -	$ -
AGC-3	Fuse	Bussman		1	$ -	$ -
AGC-4	Fuse	Bussman		3	$ -	$ -
AGC-5	Fuse	Bussman		8	$ -	$ -
6599-I	GFCI Receptacle	Leviton		1	$ -	$ -
ZB4BV033/ZB4BVG3	P/L Green	Telemecanique		1	$ -	$ -
ZB4BT4/ZB4BZ102	Mush Head P/B	Telemecanique		1	$ -	$ -
ALF16M48R	Panel Light	Hoffman		1	$ -	$ -
					$ -	$ -
					$ -	$ -
					$ -	$ -
					$ -	$ -
					$ -	$ -
					$ -	$ -
					$ -	$ -
					$ -	$ -
		Miscellaneous			$ -	$ -
		Freight In			$ -	$ -
		Other			$ -	$ -
					$ -	$ -

Total Page 1 $ -

Date: 25/08/06

Manco Control Sytems Inc.
Bill of Materials

JOB # M5472

Project: COW WTP NaOCL Gen. Sys. Master Control Pnl.

Customer: METCON

PLC Components

PAGE TWO

ITEM	QTY	PART NUMBER	DESCRIPTION	UNIT PRICE	TOTAL	DELIVERY
1			**HOT STANDBY CPU**			
2	2	140XBP00600	Quantum backplane, 6 slot 265 x 290 mm, 10.4 x 11.4			
3	2	140CPU67160	UNITY CPU			
4	2	140CPS11420	Quantum power supply, 115/230 VAC, 47-63Hz,			
5	2	140NOE77101	TSX Quantum Ethernet 10/100 Mbps Module. Network			
6	2	140CRP93200	Quantum remote I/O processor interface, dual cable, two F-			
7	1	490NOR00003	Fibre Interconnect			
8	4	520411000	F Connector			
9	2	MA0186100	Remote I/O Line splitter/COAX system			
10	2	MA0329001	F-Connector for quad shield RG-6 cable, cassette (qty. 10)			
11	1	97-5750-000	Quad Shield RG-6 Trunk/ Drop Cable, 1000 ft.			
12	4	52-0370-000	Remote I/O Cable Sys. Self Terminating BNC Adapter			
			DROP 1			
13	1	140XBP01600	Quantum backplane, 16 slot 671 x 290 mm, 26.4 x 11.4			
14	1	140CPS11420	Quantum power supply, 115/230 VAC, 47-63Hz,			
15	1	140CRA93200	Quantum remote I/O drop adapter, S908, dual cable, two F			
16	5	140DAI54000	Quantum discrete input, 16 point 115 VAC isolated			
17	2	140DRA84000	Quantum discrete output, 16 point relay NO 2 Amp per			
18	7	140XTS00200	Quantum accessories, 40 point I/O terminal strip			
19	2	MA0185100	Remote I/O Tap			
20	1	MA0329001	F-Connector for quad shield RG-6 cable, cassette (qty. 10)			
			DROP 2			
21	1	140XBP01600	Quantum backplane, 16 slot 671 x 290 mm, 26.4 x 11.4			
22	1	140CPS11420	Quantum power supply, 115/230 VAC, 47-63Hz,			
23	1	140CRA93200	Quantum remote I/O drop adapter, S908, dual cable, two F			
24	4	140ACI03000	Quantum analog input, 8 channel unipolar, high speed, 4-			
25	1	140ACO02000	Quantum analog output, 4 channel current, 4-20 mA, 12			
26	6	140XTS00200	Quantum accessories, 40 point I/O terminal strip			
27	2	MA0185100	Remote I/O Tap			
28	1	MA0329001	F-Connector for quad shield RG-6 cable, cassette (qty. 10)			
29	1	140AVI03000	Quantum analog input, 8 channel bipolar, high speed,4-20			
30	2	52-0422-000	RIO Trunk Terminator			
			NET PRICE PAGE TOTAL			
			ALL TAXES EXTRA			

METCON
SALES & ENGINEERING LIMITED

Project Name: **CITY OF WINNIPEG-ONSITE HYPOCHLORITE GENERATION EQUIPMENT**
Project No: **06-ES5564**
Date: **August 2006**

PLC COMPONENTS

SPARES

ITEM	QTY	PART NO.	DESCRIPTION
1	1	140CPU67160	Unity CPU
2	1	140CPS11420	Quantum Power Supply, 115/230 VAC
3	1	140NOE77101	Quantum Ethernet 10/100 Mbps Module
4	1	140CRP93200	Quantum Remote I/O processor interface
5	1	140CRA93200	Quantum Remote I/O drop Adapter
6	1	140DAI54000	Quantum discrete Input, 16 points,115VAC isolated
7	1	140DRA84000	Quantum discrete Output, 16 points relay NO
8	1	140ACI03000	Quantum Analogue Input, 8 channels, 4-20 mA
9	1	140ACO02000	Quantum Analogue Output, 4 channels, 4-20 mA

Earth Tech (Canada) Inc.

Reviewed for general conformance with design intent. Responsibility for detailed design in the shop drawings rests with the Contractor.

Responsibility for verification and correlation of field dimensions, fabrication process, techniques of construction, installation and coordination of all parts of the work rests with the Contractor.

REVIEWED ✓
REVIEWED AS MODIFIED
REVISE AND RE-SUBMIT
NOT REVIEWED
Project No. C28/16/79538
Date: 15/9/06 By: N. Toulson

Stainless Steel Heavy Duty Free-Standing Type 4X Enclosures for Flange-Mounted Disconnects

A Pentair Company

Rev. A June 2003

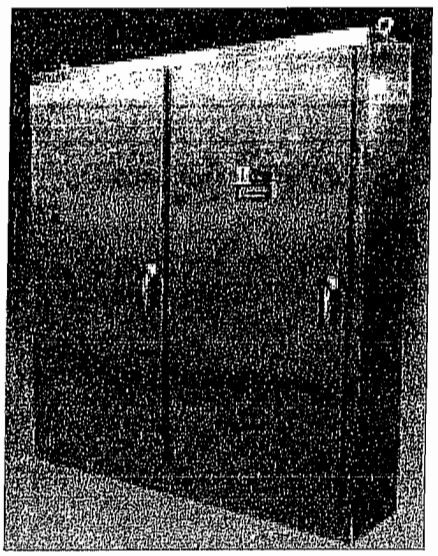

Standard single-door and three-door enclosures are also available.

Application

Designed to house the following flange-mounted disconnect switches and circuit breakers:

- **Allen-Bradley**
  - Bulletin 1494V disconnect switches with flange-mounted variable depth operating mechanisms and Bulletin 1494V flange-mounted variable depth operating mechanisms for circuit breakers.
  - Bulletin 140U flexible cable operating mechanisms for 140U molded case circuit breakers.

  Allen-Bradley Bulletin 1494V-R1, -R2, and -W2 operating handles and Allen-Bradley Bulletin 1494F disconnect devices or Bulletin 1494D circuit breaker operators will not fit these enclosures.
- **ABB Controls** flange-mounted variable-depth operating mechanisms for disconnect switches and circuit breakers.
- **Cutler-Hammer/Westinghouse** Type C361 disconnect switches and operator mechanisms. Flex Shaft™ handle operators for circuit breakers.
- **General Electric** Type STDA flange handles and variable depth operating mechanisms for disconnect switches and circuit breakers. Also Spectra Flex™ cable operators for circuit breakers.
- **Siemens ITE** Max-Flex™ flange-mounted variable depth operating handle for disconnect switches and circuit breakers as well as some fixed depth operators for disconnect switches.
- **Square D** disconnect switches and circuit breakers used with Class 9422 flange-mounted variable-depth operating mechanisms or cable mechanisms.

  These enclosures will not receive Class 9422 bracket-mounted disconnect devices or Class 9422TG1 or TG2 devices.

U.S. Patents 5,634,357
D385,7683

Construction

- 10 gauge stainless steel
- Seams continuously welded and ground smooth
- Body stiffeners in larger enclosures for extra rigidity
- Body flange trough collar excludes liquids and contaminants.
- Heavy duty lifting eyes anchor into reinforced top
- Removable centerposts permit easy panel installation
- Heavy gauge continuous hinges
- Heavy duty 3-point latching mechanism operated by Type 316 stainless steel POWERGLIDE® padlocking handle on all doors
- Ends of latch rods have rollers for easier door closing
- Panel supports
- Data pocket is high-impact thermoplastic
- Seamless foam-in-place gasket provides oil-tight and dust-tight seal against contaminants
- Removable 10 gauge steel panels mount on collar studs
- Master door is far right-hand door on all enclosures
- Patented Type 316 stainless steel handle with defeater on master door
- Patented Type 316 stainless steel handle (non-defeater) on master door
- Mechanical interlock activated by master door prevents slave doors from being opened first. Doors can be closed in any order.
- Preferred cutout on right flange provides mounting for most disconnect operators
- Bonding provision on doors and grounding studs on body

Finish

Stainless steel enclosures are unpainted. Sides and body have smooth #4 brushed finish. Panels are white.

Industry Standards

UL 508A, 508, File No. E61997: Type 3R, Type 4, Type 4X, Type 12
NEMA/EEMAC Type 3R, Type 4, Type 4X, Type 12
JIC standards EGP-1-1967 and EMP-1-1967
CSA File No. LR42186: Type 4, Type 4X, Type 12
IEC 60529, IP66
Meets Type 3RX requirements

Accessories

See Chapter 12, General Accessories.

Blank Adapter Plate
Blower Package
Corrosion Inhibitors
Electric Heater
Fan Cooling Products
Floor Stand Kit
Lighting Kit
Operator Adapters
Panels, Replacement
Window Kit

Modification Services Program

You can customize this product to your unique requirements by specifying from these options:

- Enclosure height, width, depth
- Holes and cutouts in body, doors, subpanels
- Tapped holes in subpanels
- Fasteners, mounting channel in enclosure and subpanel
- Mounting (adds and deletes)
- Doors
- Subpanels
- Thermal management (louvers, fans, filters)
- Windows
- Standard accessories
- Drip shield

For details, see Modification Services at hoffmanonline.com.
To order, contact your local Hoffman sales representative.

NOTE: For information about modifications outside the scope of the Modification Services program, contact your Hoffman sales representative.

A complete assembly consists of:

1. An enclosure.
2. A panel
3. An operator adapter (see Disconnect Enclosure Accessories in this publication to select the proper operator adapter for the brand and type of disconnect being used). Please note: door hardware is furnished with enclosure.
4. A disconnect device.

Consult the Technical Information section of this catalog for wire bend information and hoffmanonline.com for disconnect manufacturer information. Disconnect switch (or circuit breakers), operating handle, and operating mechanism are not furnished with enclosure.

When ordering a disconnect:

Consult Space Occupied by Disconnect drawing on following pages to determine whether the disconnect device you are using will fit the enclosure size you have selected.

 ©2003 Hoffman Enclosures Inc.

Standard Sizes Stainless Steel Single-Door Enclosures

Enclosure Catalog Number	Enclosure Size A x B x C inch	(millimeter)	* Panel Size inch	(mm)
A72XM2818SSN4	72.12 x 28.25 x 18.12	(1832 x 718 x 460)	60.00 x 21.75	(1524 x 552)
A72XM3418SSN4	72.12 x 34.25 x 18.12	(1832 x 870 x 460)	60.00 x 27.75	(1524 x 705)
A72XM4018SSN4	72.12 x 40.25 x 18.12	(1832 x 1022 x 460)	60.00 x 33.75	(1524 x 857)
A84XM4018SSN4	84.12 x 40.25 x 18.12	(2137 x 1022 x 460)	72.00 x 33.75	(1829 x 857)
A90XM4018SSN4	90.12 x 40.25 x 18.12	(2289 x 1022 x 460)	78.00 x 33.75	(1981 x 857)
A90XM4020SSN4	90.12 x 40.25 x 20.12	(2289 x 1022 x 511)	78.00 x 33.75	(1981 x 857)
A84XM4024SSN4	84.12 x 40.25 x 24.12	(2137 x 1022 x 613)	72.00 x 33.75	(1829 x 857)
A90XM4024SSN4	90.12 x 40.25 x 24.12	(2289 x 1022 x 613)	78.00 x 33.75	(1981 x 857)

Standard Sizes Stainless Steel Two-Door Enclosures

Enclosure Catalog Number	Enclosure Size A x B x C inch	(millimeter)	* Panel Size inch	(mm)
A72XM5418SSN4	72.12 x 54.50 x 18.12	(1832 x 1384 x 460)	60.00 x 48.00	(1524 x 1219)
A72XM6618SSN4	72.12 x 66.50 x 18.12	(1832 x 1670 x 460)	60.00 x 60.00	(1524 x 1524)
A72XM7818SSN4	72.12 x 78.50 x 18.12	(1832 x 1994 x 460)	60.00 x 72.00	(1524 x 1829)
A84XM7818SSN4	84.12 x 78.50 x 18.12	(2137 x 1994 x 460)	72.00 x 72.00	(1829 x 1829)
A90XM7818SSN4	90.12 x 78.50 x 18.12	(2289 x 1994 x 460)	78.00 x 72.00	(1981 x 1829)
A90XM7820SSN4	90.12 x 78.50 x 20.12	(2289 x 1994 x 511)	78.00 x 72.00	(1981 x 1829)
A72XM7824SSN4	72.12 x 78.50 x 24.12	(1832 x 1994 x 613)	60.00 x 72.00	(1524 x 1829)
A84XM7824SSN4	84.12 x 78.50 x 24.12	(2137 x 1994 x 613)	72.00 x 72.00	(1829 x 1829)
A90XM7824SSN4	90.12 x 78.50 x 24.12	(2289 x 1994 x 613)	78.00 x 72.00	(1981 x 1829)

Standard Sizes Stainless Steel Three-Door Enclosures

Enclosure Catalog Number	Enclosure Size A x B x C inch	(millimeter)	Number ( ) and Size of Panels: * Large inch	(mm)		* Small inch	(mm)
A72XM3EQ18SSN4	72.12 x 100.75 x 18.12	(1832 x 2559 x 460)	(1) 60.00 x 60.00	(1524 x 1524)	and	(1) 60.00 x 27.75	(1524 x 705)
A72XM3EW18SSN4	72.12 x 118.75 x 18.12	(1832 x 3017 x 460)	(1) 60.00 x 72.00	(1524 x 1829)	and	(1) 60.00 x 33.75	(1524 x 857)
A84XM3EW18SSN4	84.12 x 118.75 x 18.12	(2137 x 3017 x 460)	(1) 72.00 x 72.00	(1829 x 1829)	and	(1) 72.00 x 33.75	(1829 x 857)
A84XM3EW24SSN4	84.12 x 118.75 x 24.12	(2137 x 3017 x 613)	(1) 72.00 x 72.00	(1829 x 1829)	and	(1) 72.00 x 33.75	(1829 x 857)
A90XM3EW24SSN4	90.12 x 118.75 x 24.12	(2289 x 3017 x 613)	(1) 78.00 x 72.00	(1981 x 1829)	and	(1) 78.00 x 33.75	(1981 x 857)

Millimeter dimensions ( ) are for reference only; do not convert metric dimensions to inch.

* Panels are furnished with enclosure.

 ©2003 Hoffman Enclosures Inc.

Two-Door Enclosures

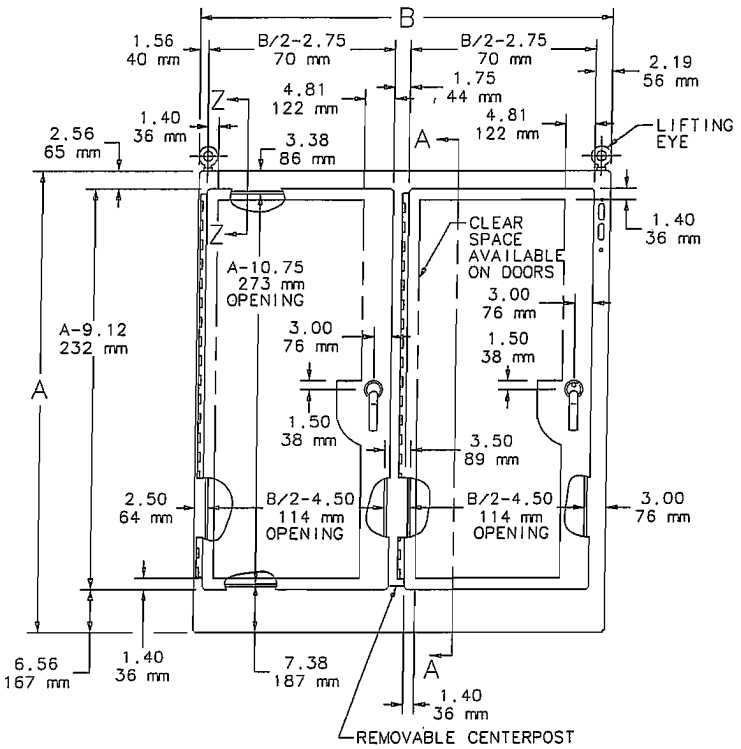

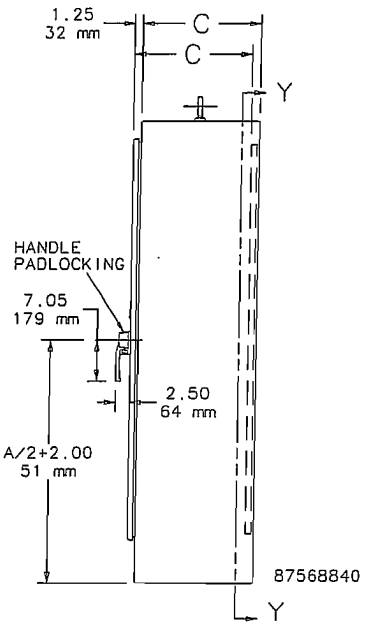

NOTES: 1. 10 gauge steel panel is furnished with enclosures. See catalog number tables for size.
2. Right door is master door and includes a removable 12.00 x 12.00 in. (305 x 305mm) data pocket.

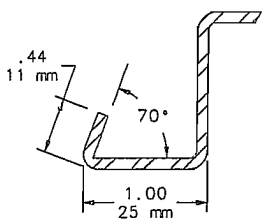

SECTION Z-Z

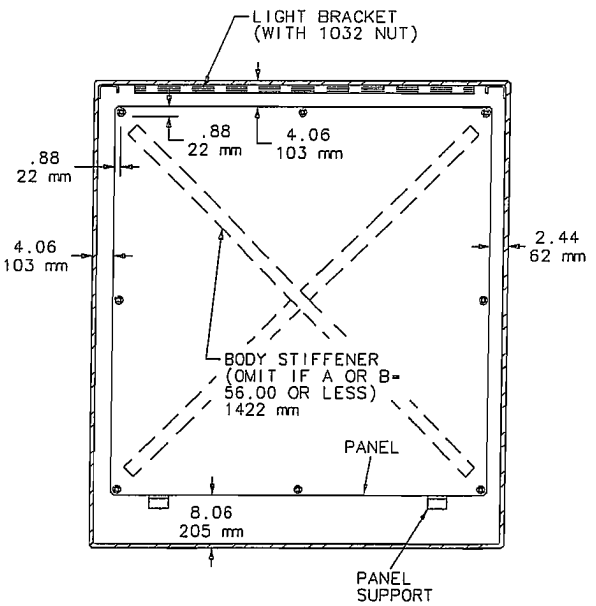

SECTION Y-Y

 ©2003 Hoffman Enclosures Inc.

Single-Door Enclosures

Two-Door Enclosures

Three-Door Enclosures

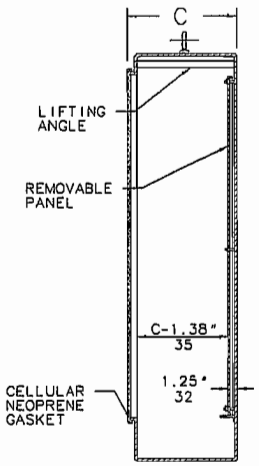

SECTION B-B

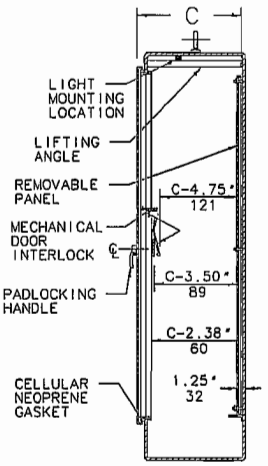

SECTION A-A

Space behind removable centerpost

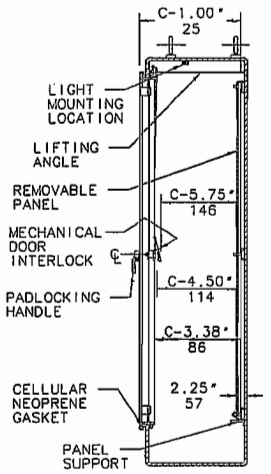

SECTION A-A

Space behind removable centerpost

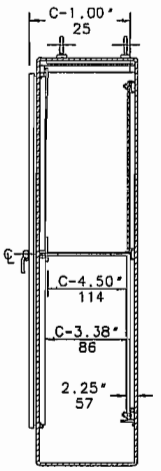

SECTION B-B

Space behind solid centerpost

Consult disconnect manufacturer or see Disconnect Ordering Information at hoffmanonline.com for F1, G1, and W1 dimensions of various brands of disconnects.

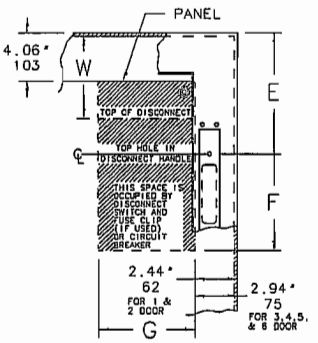

11C59198

All 24.12-inch (613mm) and deeper enclosures using short connecting rods in the following models require a Hoffman platform assembly, catalog number ADSCPA, purchased separately.

- ABB Controls flange-operated devices
- Cutler-Hammer C361 devices
- Cutler-Hammer C371 mechanisms which use C371E, F, G, K operating mechanism (see next paragraph for option)
- General Electric Type TDA devices (see next paragraph for option)
- Square D Class 9422 devices (see next paragraph for option)

The platform assembly can be omitted if long connecting rods are ordered in place of short connecting rods.

- For Cutler-Hammer operating mechanisms C371E and C371F order catalog number C371CS1 connecting rod. For C371G and C371K order catalog number C371CS2 connecting rod.
- For General Electric devices, order catalog number TDSR extended length drive rod
- For Square D devices, order catalog number 9422-R2 extra long operating rod(s). Some devices require two rods.

Consult factory for space occupied on panel when platform is used.

Space Occupied by Disconnects

Disconnects will occupy space on panel shown by dimensions E1, F, and G1. Wiring space W1 is available when disconnect is installed in the enclosure.

See the Technical Information section of this catalog for E1 Spacing by Enclosure Height for various disconnect switch manufacturers.

Refer to ***National Electrical Code® 2002*** article 430-10(b) for wiring space required for line side conductors to be connected to disconnect.

Verify your application to determine if wiring space is adequate.

 ©2003 Hoffman Enclosures Inc.

Backplanes

Presentation, description

Presentation

The Modicon TSX Quantum modules mount easily into backplanes in industry-standard electrical cabinets or on19-inch racks. Optional mounting brackets are available for rack-mounting. A backplane provides the control signals and distributes the power necessary operate the installed modules.

Description

Six different backplane models are available (with 2, 3, 4, 6, 10, or 16 slots. Backplane slots are universal) in other words, any module may fit into any slot. Almost all Quantum modules are designed to fit into single slots on a Quantum backplane; the only exception is the MMS SERCOS motion module, which requires two contiguous slots.

There are no slot dependencies in a Quantum system, although we do recommend that power supply modules use the outermost slot position for optimum heat dissipation. The only limits on the backplane are available module power and addressing space. Any backplane may be used in any of the three system architectures supported by Quantum (standalone with local I/O, remote I/O or distributed I/O). Your service inventory can be reduced because there are no special backplanes for different I/O architectures.

In a Quantum system, all module addressing and configuration are handled by panel software. There are no DIP switches or other hardware settings required.

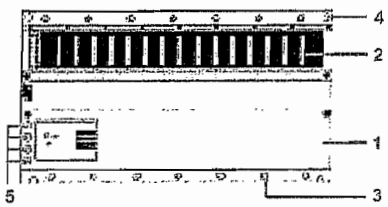

1 Metal frame.

2 Backplane connector.

3 Tapped holes for affixing modules.

4 Mounting holes.

5 Grounding terminals.

Backplane Expander Module

The 140 XBE 100 00 Quantum Backplane Expander module allows I/O in an adjacent, "secondary" backplane to communicate with the CPU or RIO drop adapter in the "primary" backplane over a custom communications cable. A Backplane Expander module must be installed in each backplane. The expander cable provides all the signals required to accomplish data communication between the two backplanes. Only a single Backplane Expander module can be added to each backplane.

The Backplane Expander module features the following flexible characteristics:

- The same 140 XBE 100 00 Backplane Expander modules are used for the primary and secondary backplanes.
- The system can use any type of Quantum power supply. Each backplane can have a different type of power supply.
- Loss of power in the secondary backplane will not shut down the entire drop. Only modules located in the secondary backplane will lose power.
- Backplane Expander modules can be located in any slot in the backplane, and do not have to be placed in corresponding slots in the primary and secondary backplanes.
- The Backplane Expander module will not be recognized by the programming panel software. It appears as an unfilled slot in the I/O map.

References

Description	Number of slots	Reference	Weight kg (lb)
Racks for: Local I/O modules Remote I/O modules Distributed I/O modules	2	140 XBP 002 00	0.230 (0.5)
	3	140 XBP 003 00	0.340 (0.75)
	4	140 XBP 004 00	0.450 (1.0)
	6	140 XBP 006 00	0.640 (1.4)
	10	140 XBP 010 00	1.000 (2.2)
	16	140 XBP 016 00	1.600 (3.5)

Backplane accessories

Description	Dimensions	Reference	Weight kg (lb)
Backplane expander	–	140 XBE 100 00	–
Backplane expander cables	1 m	140 XCA 717 03	–
	2 m	140 XCA 717 06	–
	3 m	140 XCA 717 09	–
19 in front rail mounting bracket for 140 XBP 010 00	125 mm (4.92 in) depth	140 XCP 401 00	–
19 in rear rail mounting bracket for 140 XBP 010 00	20 mm (0.79 in) depth	140 XCP 402 00	–

Dimensions

140 XBP 0●0 00

Front view

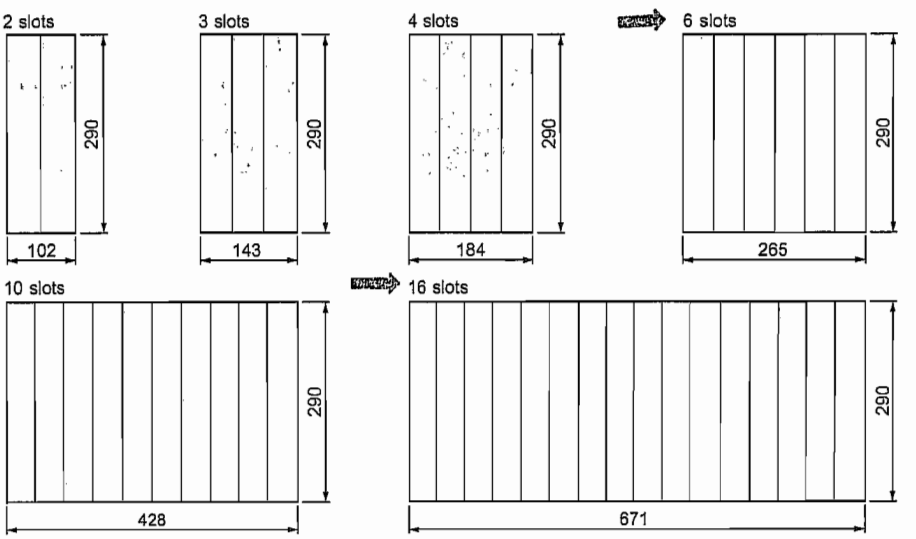

Depth with modules: 104 mm

Presentation

Quantum power supply modules serve two purposes-they provide power to the system backplane and protect the system from noise and nominal voltage swings. All power supplies feature over-current and over-voltage protection. They operate in most electrically noisy environments without the need for external isolation transformers. In the event of an unforseen loss of power, the power supplies ensure that the system has adequate time for a safe and orderly shutdown.

A power supply converts the incoming power source to a regulated +5 V d.c. to support the CPU, the local I/O and any communication option modules mounted in the backplane. Power between the field sensors/actuators and the Quantum I/O points is not provided by these power supply modules.

If your Quantum system is being used in a standalone (local I/O) or remote I/O control architecture, three types of power supplies are available:
- Low-power standalone power supplies.
- High-power summable power supplies.
- High-power redundant power supplies.

If your Quantum system is being used in a distributed I/O architecture, special low-power standalone power supplies, which are dedicated to distributed architectures and are integrated into distributed I/O adapter modules, are available. Distributed power supplies are described in the DIO architecture section of this catalog.

Functions

Standalone power supplies

A standalone power supply delivers 3 A of current to a Quantum backplane.When the control system has low-power requirements, a standalone power supply is an economical choice. Standalone supplies are available for 115/230 V a.c., 24 V d.c. and 125 V d.c. source voltages.

Summable power supplies

A summable power supply delivers 8 A or 11 A (depending on the model) of current to a Quantum backplane. Summable supplies can operate in either a standalone or summable mode. Whenever two summable supplies are combined in the same backplane, they automatically operate in summable mode-delivering 16 A or 20 A (depending on the model) of power to the backplane. In summable mode, the two supplies must be the same model and they should be placed in the left and right edge slots of the backplane for maximum life. If one of the two supplies fails, power is lost to the backplane.

If only one summable power supply is placed in a backplane, it functions in standalone mode-delivering 8 A or 11 A (depending on the model) to the backplane.

Summable power supplies are available for 115/230 V a.c., 24 V d.c. and 48/60 V d.c. source voltages.

Redundant power supplies

A redundant power supply delivers 8 A or 11 A (depending on the model) of current to a Quantum backplane. For high-availability applications, two redundant power supplies in a backplane deliver 8 A or 11 A (depending on the model) of redundant current. In the event that one supply fails, the healthy one maintains the necessary power so that backplane processing and active communications are not affected. Each redundant supply has a status bit that can be monitored by the CPU's application program or by a supervisory system so that you respond quickly in the event of a power supply failure.

If additional power is required in a redundant power supply configuration, a third redundant supply module can be added to the backplane-increasing the total redundant power capacity to 16 A or 20 A (depending on the model). Should one of the three supplies fail, the two healthy modules will revert to the standard redundant mode-delivering 8 A or 11 A (depending on the model) of redundant current to the backplane.
A single redundant power supply module may be used as a standalone supply if you need to reduce your stockroom requirements.
Redundant power supplies are available for 115/230 V a.c., 24 V d.c., 48/60 V d.c. and 125 V d.c. source voltages.

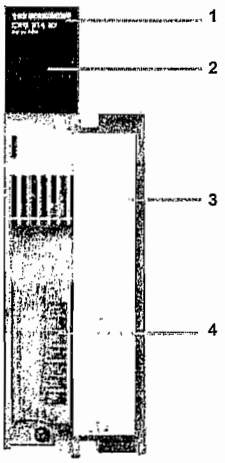

Description

The 140 CPS ●●● ●0 power supply modules comprise on front panel:

1 Model number and color code.
2 LED array.
3 Removable, hinged door and customer identification label.
4 Terminal block, 7 points (degree of protection < IP 20 rated).

To be ordered separately if necessary:
□ 140 XTS 005 00 terminal block, 7 points (degree of protection < IP 20 rated).

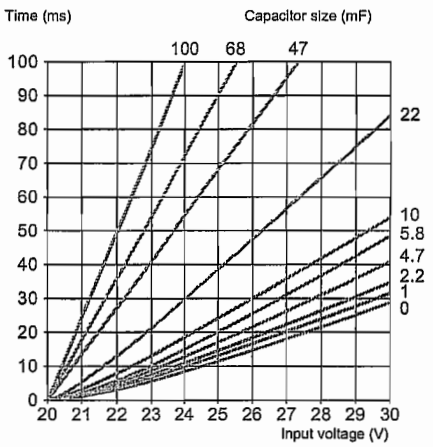

Maximum power interruption

The buffer processing times for the 140 CPS 214 00/224 00/414 00/424 00 power supplies can be increased by adding V d.c. electrolytic capacitors at terminals 5 and 6. Respective capacitor ratings are shown in this diagram.

Modicon Quantum automation platform

Power supply modules

Characteristics

Model				140 CPS 111 00 standalone	140 CPS 114 20 summable	140 CPS 124 ●0 redundant
Input requirements	Input voltage		∼ V	100 ... 276	93 ... 132 or 170 ... 264	93 ... 138 or 170 ... 276
	Input frequency		Hz	47 ... 63		
	Input current	At ∼ 230 V	A	0.2	0.75	0.6
		At ∼ 115 V	A	0.4	1.3	1.1
	Inrush current	At ∼ 230 V	A	20	19	
		At ∼ 115 V	A	10	38	
	Rating		VA	50	130	
	External fusing		A	1.5 slow-blow	2.0 slow-blow	
	Input power interruption			1/2 cycle at full and minimum line voltage/frequency, and less than 1s between interrupts		
	Harmonic distortion		%	Less than 10 of fundamental rms value		
Output-to-bus	Voltage		⎓ V	5.1		
	Current		A	3 max., 0.3 min.	Summable: 20 at 60 °C (140 °F) Standalone: 11 at 60 °C (140 °F)	8 at 60 °C (140 °F) (140 CPS 124 00) 11 at 60 °C (140 °F) (140 CPS 124 20)
	Protection			Over-current, over-range		
General	Internal power dissipation		W	2.0 + (3 x I_{OUT}) where I_{OUT} is in A	6.0 + (1.5 x I_{OUT}) where I_{OUT} is in A	

Model			140 CPS 211 00 standalone	140 CPS 214 00 summable	140 CPS 224 00 redundant
Requirement	Input voltage	⎓ V	20 ... 30		
	Input currrent	A	1.6	3.8 max	
	Inrush current	A	30	25 at ⎓ 24 V, 14 at ⎓ 20 V	
	Input ripple	⎓ V	–	94 ... 189 Hz	
	Input power interruption	ms	1.0 at ⎓ 20 V		
			20.0 at ⎓ 25 V	100 ms maxi with external condensator	
	External fusing (recommended)	A	2.5 slow-blow	5.0 slow-blow	
Output-to-bus	Voltage	⎓ V	5.1		
	Current	A	3 max., 0.3 min.	8.0	
	Protection		Over-current, over-range		
General	Surge withstand	⎓ V	–		2.3 x max rated input voltage for 1.3 ms
	Internal power dissipation	W	2 + (3 x I_{OUT}), where I_{OUT} is A	6 + (1.8 x I_{OUT}), where I_{OUT} is A	
	Alarm relay		No	Yes	
Agency approval			UL 508, CSA 22.2-142, c UL, FM Class 1 Div. 2, e		

Model			140 CPS 414 00 summable	140 CPS 424 00 redundant	140 CPS 511 00 standalone	140 CPS 524 00 redundant
Requirement	Input voltage	⎓ V	48 ... 60		100 ... 150	
	Input currrent	A	3.8 max		0.4	0.5 at ⎓ 125 V
	Inrush current	A	14 at ⎓ 40 V		10	28 at ⎓ 125 V
	Input power interruption	ms	13.0 at ⎓ 48 V		1.0 max	
	External fusing (recommended)	A	2.0, medium time lag		3/4 slow-blow	2 slow-blow
Output-to-bus	Voltage	⎓ V	5.1			
	Current	A	8.0		3 max, 0.3 min	8.0
	Protection		Over-current, over range			
General	Internal power dissipation	W	15.6 at 8 A	17.2 at 8 A	2 + (3 x I_{OUT}) where I_{OUT} is A	6 + (1.5 x I_{OUT}) where I_{OUT} is A
	Alarm relay		Yes		No	
Agency approval			UL 508, CSA 22.2-142, c UL, FM Class 1 Div. 2, CE			

References

Power supplies

Input voltage/power	Output current	Type	Reference	Weight kg(lb)
∼ 120/230 V	3 A	Standalone	140 CPS 111 00	0.650 (1.43)
∼ 115/230 V	11 A	Summable	140 CPS 114 20	0.650 (1.43)
∼ 120/230 V	8 A	Redondante	140 CPS 124 00	0.650 (1.43)
∼ 115/230 V	11 A	Redondante	140 CPS 124 20	0.650 (1.43)
⎓ 24 V	3 A	Standalone	140 CPS 211 00	0.650 (1.43)
	8 A	Summable	140 CPS 214 00	0.650 (1.43)
		Redondante	140 CPS 224 00	0.650 (1.43)
⎓ 48...60 V	8 A	Summable	140 CPS 414 00	0.650 (1.43)
		Redondante	140 CPS 424 00	0.650 (1.43)
⎓ 125 V	3 A	Standalone	140 CPS 511 00	0.650 (1.43)
	8 A	Redondante	140 CPS 524 00	0.650 (1.43)

Separate parts

Input voltage/power	Degree of protection	Reference	Weight kg(lb)
Terminal block 7 points	IP 20	140 XTS 005 00	0.150 (0.33)

Wiring

140 CPS 111 00

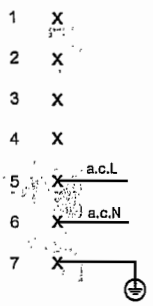

140 CPS 114 20
140 CPS 124 20

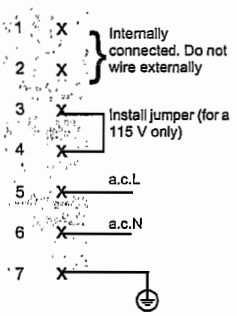

140 CPS 124 00

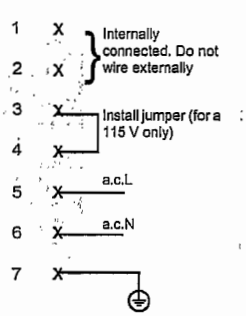

140 CPS 211 00

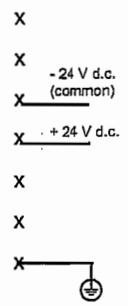

140 CPS 214/224 00

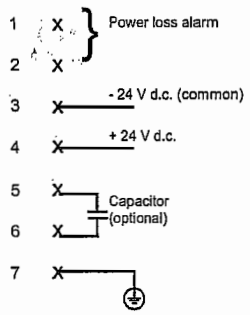

140 CPS 414/424 00

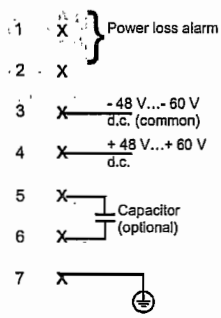

140 CPS 511 00

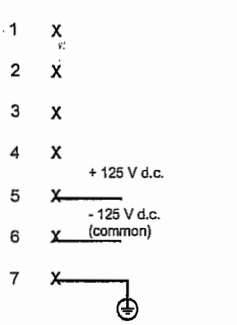

140 CPS 524 00

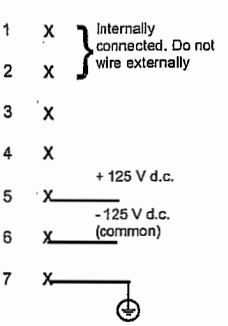

Modicon Quantum automation platform

Unity processors

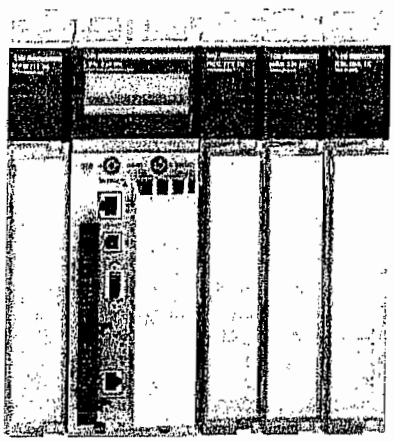

Presentation

Modicon Quantum CPUs are a family of high-performance programmable controllers based on 486, 586 and Pentium processors, and are compatible with Unity Pro software. Some of the features implemented in these CPUs include:

- Superior scan times and I/O throughput.
- Ability to handle interrupts, timed and I/O based.
- Handling of Fast task, as well as a Master task.
- Memory expansion through PCMCIA cards.
- Multiple communication interfaces embedded in the CPU.
- A user-friendly diagnostic and operation LCD display on the front panel of high-end models.

The processors offered can be differentiated by their memory capacities, processing speeds and communication options.

Memory backup, protection and expansion

The CPUs store the application program in a battery-backed internal RAM. The battery is located on the front of the module and can be serviced while the CPU is running.

To protect the application program from inadvertent changes during operation, the processors feature a key switch on the front panel. This key switch can also be used to start and stop the CPU. The 140 CPU 311 10 processor only has a memory-protect slide switch.

A memory protection bit, to be set in configuration mode, is also available to lock any program modification (via the programming PC or downloads).

High-end processors 140 CPU 651 50/60 and 140 CPU 671 60 have 2 slots for a PCMCIA card:

- An upper slot (no. 0) to receive memory extension cards (programs, symbols, constants and/or data files).
- A lower slot (no. 1) to receive memory extension cards specific to the data files.

Built-in communication ports

Quantum CPUs support:

- Two Modbus RS 232 ports (Modbus RS 485 with 140 CPU 651 ●0 and 140 CPU 671 60 processors)
- One Modbus Plus port

Depending on the model, Quantum processors can include:

- A 10BASE-T/100BASE-TX Ethernet TCP/IP port (RJ45 connection)
- A USB port for connecting a programming terminal

LCD display

Some CPU models have an LCD display (2 lines of 16 characters) with brightness and contrast controls. Through a keypad and the display the CPUs can be diagnosed, some configuration parameters can be set and the CPUs can be started and stopped.

Hot Standby (redundancy)

The Quantum 140 CPU 671 60 processor is dedicated to managing Hot Standby functionality. It has an Ethernet 100 Mbps fiber optic link and the Hot Standby function can be diagnosed through the LCD display.

Quantum application design and installation

Installation of these Quantum processors requires:

- Unity Pro Large or Extra Large programming software. This software is compatible with the Premium platform.
- Optionally, as required:
  - The Unity Studio software suite, used to design distributed applications
  - Unity Application Generator (UAG) specialist software for modeling and generating process applications
  - Unity EFB toolkit software for developing EF and EFB function block libraries in C language
  - Unity SFC View software for display and diagnostics of applications written in Sequential Function Chart (SFC) language

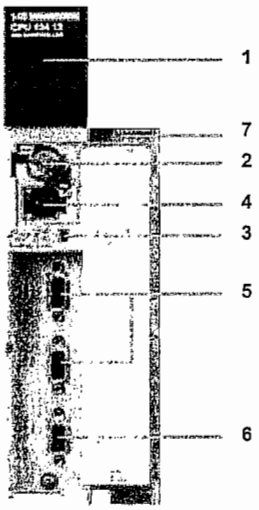

140 CPU 434 12U/534 14U

Description

Basic processors

The **140 CPU 311 10**, **140 CPU 434 12U** and **140 CPU 534 14U** processor front panels comprise:

1 A display unit consisting of 7 LEDs:
- □ Ready LED (green): the CPU has passed the power-up diagnostic tests
- □ Run LED (green): the CPU has been started and is solving logic
- □ Modbus LED (green): communications are active on the Modbus port
- □ Modbus Plus LED (green): communications are active on the Modbus Plus port
- □ Mem Prt LED (orange): write-protected memory (activated memory protection switch)
- □ Bat Low LED (red): the battery needs replacing or is not present
- □ Error A LED (red): indicates communications error on the Modbus Plus port

2 One backup battery slot

3 One slide switch for selecting the Modbus port communication parameters
- □ One slide switch (140 CPU 311 10 model) to write-protect the memory.

4 One key-operated switch (140 CPU 434 12U/534 14U models):
- □ Stop position: the programmable controller is stopped and program modifications are not authorized
- □ Mem Prt position: the programmable controller is either stopped or is running and program modifications are not authorized
- □ Start position: the programmable controller is either stopped or is running and program modifications are authorized

5 Two 9-pin female SUB-D connectors for connecting to the Modbus bus

6 One 9-pin female SUB-D connector for connecting to the Modbus Plus network

7 A removable, hinged door with customer identification label.

High-performance processors

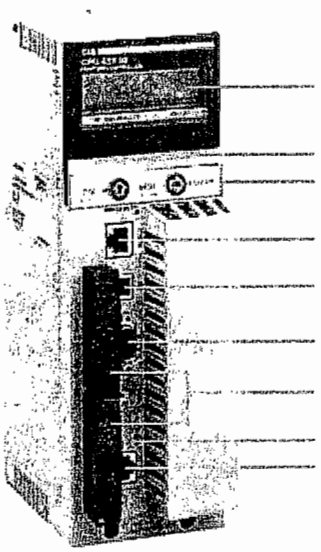

140 CPU 651 50/60

The **140 CPU 651 50**, **140 CPU 651 60** and **140 CPU 671 60** processor front panels comprise:

1 An LCD display cover, providing access to:

2 A key switch:
- □ Unlocked: all system menu operations are able to be invoked and all changeable module parameters are able to be modified by the operator via the LCD and keypad, memory protection is off.
- □ Locked: no system menu operations are able to be invoked and all changeable module parameters are read only, memory protection is on.

3 One backup battery slot.

4 One reset button (Restart).

5 An LCD display (2 lines of 16 characters) with brightness and contrast controls.

6 A 5-button keypad with 2 LEDs *(ESC, ENTER, MOD, ⇗, ⇨)*.

7 An RJ45 connector for connecting to the Modbus bus.

8 A type B female USB connector for connecting the programming PC terminal.

9 One 9-pin female SUB-D connector for connecting to the Modbus Plus network.

10 Two slots for PCMCIA memory extension cards.

11 Two LEDs:
- □ COM LED (green): indicates Ethernet activity (140 CPU 651 50/60 models), indicates Hot Standby primary or secondary station activity (140 CPU 671 60 model)
- □ ERR LED (red): indicates Ethernet collision (140 CPU 651 50/60 models), indicates communications error between Hot Standby primary and secondary stations (140 CPU 671 60 model).

12 An RJ45 connector for connecting to the Ethernet network (140 CPU 651 50/60 model).
- □ One MT-RJ fiber optic connector for interconnecting the primary and secondary PLCs in the Hot Standby architecture (140 CPU 671 60 model).

Processor without a PCMCIA memory card

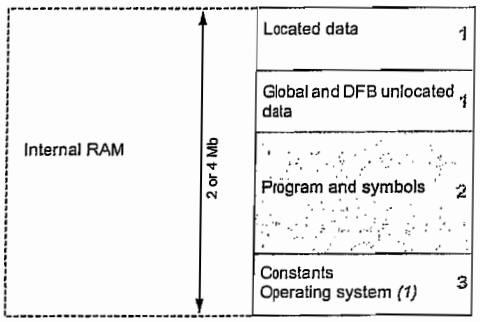

Processor with PCMCIA memory card in slot no. 0

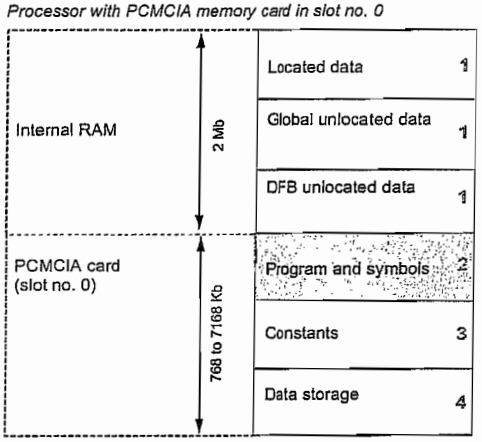

Processor with data storage type memory card in slot no. 0

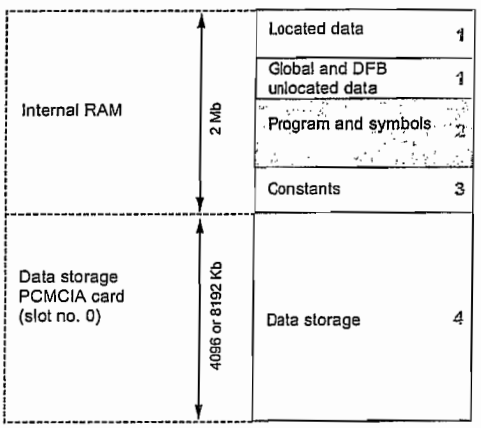

Memory structure

The application memory is divided into memory areas physically distributed in the internal RAM memory and on 1 or 2 PCMCIA memory extension cards (only on 140 CPU 651 50/60 and 140 CPU 671 60 processors):

1 Application data area always in the internal RAM. This area is broken down into 2 types of data to be used according to the user's habits and choices:
- □ Located data corresponding to data defined by an address (for example, %MW237) with which a symbol may be associated (for example, Counting_rejects)
- □ Unlocated data corresponding to data defined only by a symbol. This type of addressing removes the memory "mapping" management constraints because addresses are assigned automatically
- □ DFB unlocated data corresponding to DFB user function blocks. The size of this object zone is limited only by the available memory in integrated RAM.

2 Application program and symbols area in the internal RAM or in the PCMCIA memory card (descriptor, executable code of tasks and application symbol database).

3 Constants area in the internal RAM or in the PCMCIA memory card (constant words, initial values and configuration).

4 Area for storing additional data that can be used for distributed applications to store information such as production data and manufacturing recipes (only on 140 CPU 651 50/60 and 140 CPU 671 60 processors).

According to the application memory size requirements, two memory structures are possible depending on whether the Quantum processor (140 CPU 651 50/60 or 140 CPU 671 60 models) has 0, 1 or 2 PCMCIA memory extension cards:

■ Application in internal RAM, the application is completely loaded into the processor's battery-backed internal RAM *(2)*, the capacity of which depends on the processor model.

■ Application in the PCMCIA card, whereby the internal RAM is reserved for the application data. The PCMCIA memory card contains the program space (program areas, symbols and constants). Certain types of PCMCIA memory card also utilize the data file storage area.

The presence of the symbols area with the program area is optional. Having the application symbols database on the PLC means that, when connected to a programming terminal not containing any applications, all the elements needed to debug or upgrade this PLC are available within the PLC.

(1) Only for 140 CPU 311 10/434 12U/534 14U processors.
(2) The internal RAM memory is backed up by a cadmium nickel battery. The RAM memory cards are protected by a Lithium battery.

Processor with 2 PCMCIA memory cards in slots no. 0 and no. 1

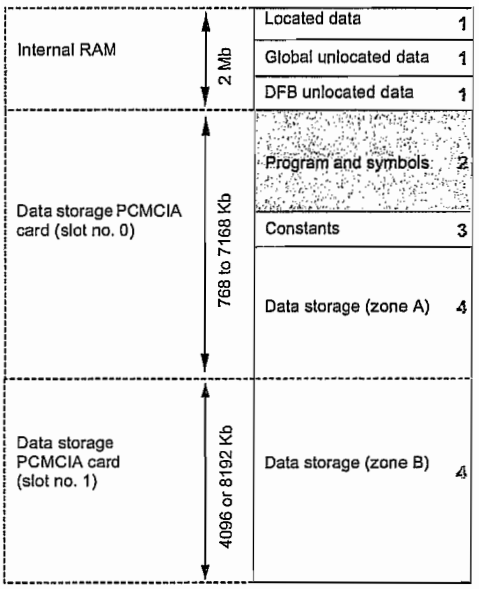

Memory structure (continued)

Extension of the file storage area

With the TSX MRP F004M/F008M file storage memory cards (4096 or 8192 Kb):

- A file storage area can be provided when the application is completely loaded in the internal RAM.
- The memory space can be freed up for the program when the application is in the PCMCIA card.

The Unity Pro programming software assists the application designer with management of the structure and the occupation of memory space in the Quantum PLC.

Protecting the application

Whatever the PLC memory structure:

- The application located in the internal RAM or in the PCMCIA card can be protected in order to prohibit its access (read or modify program) in online mode with Unity Pro.
- A memory protection bit, to be set in configuration mode, is also available to lock any program modification (via the programming terminal or downloads).

Modicon Quantum automation platform

Unity processors

Quantum programmable controllers have been developed to comply with the main national and international standards in respect of the electronic equipment used in process automation. See pages 9/2 to 9/7 "Standards, certification and environmental conditions".

Characteristics and performance

Type of processor				140 CPU 311 10	140 CPU 434 12U	140 CPU 534 14U	140 CPU 651 50	140 CPU 651 60	140 CPU 671 60
Maximum configuration	No. of racks with 2/3/4/6/10/16 slots	Local I/O		2					
		Remote I/O		31 drops x 2 racks					
		Distributed I/O		63 drops x 1 rack/3 networks					
Inputs/Outputs	Discrete I/O (1)	Local I/O		Unlimited (27 slots max.)			Unlimited (26 slots max.)		
		Remote I/O		31,744 inputs and 31,744 outputs					
		Distributed I/O		8000 inputs and 8000 outputs per network					
	Analog I/O (1)	Local I/O		Unlimited (27 slots max.)			Unlimited (26 slots max.)		
		Remote I/O		1984 inputs and 1984 outputs					
		Distributed I/O		500 inputs and 500 outputs per network					
	Application-specific I/O			Intrinsic safety, counter, motion control I/O, high-speed interrupt inputs, serial link, accurate time stamping					
Communications	No. of option modules (in local rack)	Ethernet, Modbus Plus, Profibus DP, SERCOS, SY/Max		2	6				
	Maximum no. of connections	Modbus		2 integrated RS (2)	2 integrated RS 232 Modbus/ASCII		1 integrated RS 232/485 Modbus/ASCII		
		Modbus Plus		1 integrated, 2 max. in local rack	1 integrated, 6 max. in local rack				
		Ethernet TCP/IP		2 max. in local rack	6 max. in local rack		1 integrated, 6 max. in local rack		
		Profibus DP		2 max. in local rack	6 max. in local rack				
		AS-Interface		Unlimited (27 slots max.) in local rack, 4 in remote drop, 2 in distributed drop			Unlimited (26 slots max.) in local rack, 4 in remote drop, 2 in distributed drop		
		USB		–			1 port reserved for programming PC		
Functions	Redundancy			Power supplies, remote I/O networks, Modbus Plus, Ethernet TCP/IP, CPUs					
	Process control			Yes					
	Hot Standby			–					Yes
Memory capacity without PCMCIA card	Internal RAM		Mb	2	4		2		
	Program and unlocated data (min.)		Kb	400	800	2716	512	768	
	Located data and config. (max.)		Kb	148	256				
Memory capacity with PCMCIA card	Program		Kb	–			7168		
	Configuration and located/unlocated data (max.)		Kb	–			512	1024	
Maximum size of memory object areas	Flash		Kb	1152			–		
	Located internal bits (%MI)		bits	51,712	65,528				
	Located internal data		Kb	19.3	130				
	Unlocated internal data		Kb	548	1056	2972	512/768 (with/no PCMCIA)	1024	
Key switch	Start/Stop/Mem prot			–	Yes		–		
	Mem prot on/off			–			Yes		
Slide switch	Mem prot/off			Yes	–				
	Com port: ASCII/RTU/Mem			Yes			–		
Application structure	Master task			1 cyclic/periodic					
	Fast task			1 periodic					
	Auxiliary tasks			0			4		
	Interrupt tasks	Max. number		64			128		
		I/O interrupt		64			128		
		Timer interrupt		16			32		
Execution time for one instruction (3)	Boolean		µs	0.12...0.585		0.08...0.585	0.0525...0.075		
	On word		µs	0.12...0.585		0.08...0.585	0.045...0.06		
	On fixed-point arithmetic		µs	0.10...0.27		0.07...0.27	0.045...0.06		
	Floating point		µs	0.10...0.27		0.07...0.27	0.48...0.56	0.40...0.50	
No. of Kinstructions executed by ms	100% boolean		Kins/ms	1.86		1.97	10.28		
	65% boolean and 35% numerical		Kins/ms	2.49		2.61	9.91	10.07	
System overhead	MAST task		ms	1					
	FAST task		ms	0.2					

(1) The maximum values of number of discrete and analog I/O are not cumulative.
(2) 2 RS 232/485 Modbus/ASCII integrated links
(3) Threshold values according to the type of instructions.

Unity CPUs

Processor		Memory (max.)			Communication ports	Reference	Weight
Clock speed	Coprocessor	RAM	Program	Program with PCMCIA card.			
MHz		Mb	Kb	Kb			kg
66	Built-in math processor	2	548	–	2 Modbus RS 232 1 Modbus Plus	140 CPU 311 10	–
	Built-in math processor	2	1056	–	2 Modbus RS 232 1 Modbus Plus	140 CPU 434 12U	–
133	Built-in math processor	4	2972	–	2 Modbus RS 232 1 Modbus Plus	140 CPU 534 14U	–
166	Yes, built-in Ethernet TCP/IP	2	768	7168	1 Modbus *(1)* 1 Modbus Plus 1 USB 1 Ethernet TCP/IP	140 CPU 651 50	–
266	Yes, built-in Ethernet TCP/IP	2	1024	7168	1 Modbus *(1)* 1 Modbus Plus 1 USB 1 Ethernet TCP/IP	140 CPU 651 60	–
					1 Modbus *(1)* 1 Modbus Plus 1 USB 1 Hot Standby port (100 Mbps)	140 CPU 67160	–

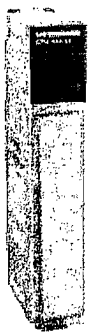

140 CPU 311 10

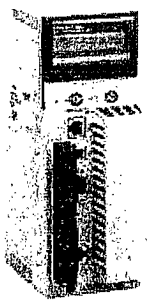

140 CPU 651 •0

(1) Modbus RS 232/RS 485 port.

PCMCIA memory extension cards

Quantum 140 CPU 651 50/60 and 140 CPU 671 60 processors can accept up to 2 memory extension cards. However, the useful memory capacity is limited to the maximum size defined for the processor model. See pages 1/10 and 1/11.

Connection cables

Description	Use		Length	Reference	Weight
	From processor	To PC port			kg
Connection cables for PC terminal	9-pin SUB-D Modbus port for 140 CPU 311 10, 140 CPU 434 12U, 140 CPU 534 14U	RS 232 (9-pin SUB-D connector)	3.7 m	990 NAA 263 20	0.300
			15 m	990 NAA 263 50	1.820
	RJ45 Modbus port for 140 CPU 6•1 •0	RJ45 connector	1 m	110 XCA 282 01	–
			3 m	110 XCA 282 02	–
			6 m	110 XCA 282 03	–
	USB port for 140 CPU 6•1	USB port	3.3 m	UNY XCA USB 033	–
Connection cables for Modbus Plus network	9-pin SUB-D Modbus port for 140 CPU 311 10, 140 CPU 434 12U, 140 CPU 534 14U	Modbus Plus tap	2.4 m	990 NAD 211 10	–
			6 m	990 NAD 211 30	–
	9-pin SUB-D Modbus port for 140 CPU 6•1 •0	Modbus Plus tap	2.4 m	990 NAD 218 10	–
			6 m	990 NAD 218 30	–
Adapter	RJ45 connector for 140 CPU 6•1 •0	RS 232 (9-pin SUB-D connector)	–	110 XCA 203 00	–

Modicon Quantum automation platform

I/O architectures

Remote I/O

Adapter modules

Description	Cable	Reference	Weight kg (lb)
Quantum RIO head-end adapter (1 max.)	Single-cable	140 CRP 931 00	–
	Redundant-cable	140 CRP 932 00	–
Quantum RIO drop adapter (31 max.)	Single-cable	140 CRA 931 00	–
	Redundant-cable	140 CRA 932 00	–
RIO drop	Fiber optic	490 NRP 954 00	–

Connection cables

Description	Use/length	Reference	Weight kg (lb)
RG-6 coaxial quad shield cable (sold by the roll)	Drop cable 320 m (1000 ft)/roll	97 5750 000	–
RG-11 coaxial quad shield cable (sold by the roll)	Trunk cable 320 m (1000 ft)/roll	97 5951 000	–
Preassembled drop cable (with F connectors, self-terminating F adapter, and quad shield RG-6 cable)	15 m (50 ft)	AS MBII 003	–
	42 m (140 ft)	AS MBII 004	–

Backplane accessories *(1)*

Description	Use/length	Reference	Weight kg (lb)
Backplane expander module	–	140 XBE 100 00	–
Expander cables module	1 m	140 XCA 717 03	–
	2 m	140 XCA 717 06	–
	3 m	140 XCA 717 09	–

(1) For backplanes 12…16 slots, see page 2/3.

References

Hot Standby CPU with Unity Pro

Hot Standby CPU		Memory (max.)			Communication ports	Reference	Weight kg
Clock speed	Coprocessor	RAM	Program (with located variables)	Program with PCMCIA card.			
266 MHz	Yes, integrated Ethernet TCP/IP, use reserved for Hot Standby	2 Mb	896 Kb	7168 Kb	1 Modbus *(1)* 1 Modbus Plus 1 USB 1 Ethernet 100 Mbps port, used as Hot Standby port	140 CPU 671 60	–

Associated modules

Description	Topology	Reference	Weight kg
RIO central control unit modules	Simple cable	140 CRP 931 00	–
	Redundant cable	140 CRP 932 00	–

Accessories

Description	Use/composition	Length	Reference	Weight kg
Splitter	Tee for joining sections of coaxial cable coming from 2 central control unit modules (140 CRP 93● 00). Constitutes the start of the RIO I/O backbone.	–	MA 0186 100	–
Line impedance for coaxial cable RG-6/RG-11	Impedance for RIO coaxial cable. Used to maintain a suitable RIO line on disconnection of the cable coming from the central control unit (140 CRP 93● 00). Connection at both ends on female connector.	–	990 XCA 656 09	–
Earthing terminal for coaxial cable RG-6/RG-11	Earthing terminal for RIO coaxial cable. Used to maintain earthing of the RIO line on disconnection of the cable coming from the central control unit (140 CRP 93● 00). Connection at both ends on female connector.	–	60 0545 000	–
Jumpers for fiber optic cable	62.5/125 multimode fiber optic cable, equipped with MT-RJ connectors. Designed to connect the100 Mbps Ethernet ports of 140 CPU 671 60 processors ("Primary" and "Standby"), in order to make up the data update channel.	3 m	490 NOR 000 03	–
		5 m	490 NOR 000 05	–
		15 m	490 NOR 000 15	–

(1) Modbus RS 232/RS 485 port

Presentation

Ethernet 140 NOE 771 ●1/NWM 100 00 Ethernet network modules are single format modules for installing in the local rack slots of a Modicon Quantum PLC configuration.
A configuration can take from 2 to 6 application-specific modules, including network modules, depending on the type of processor.

Description

The front panel of TCP/IP 140 NOE 771 01/771 11 and 140 NWM10000 Ethernet modules comprises:

1 A display block, which indicates the module status and the transmission status on the network.
A hinged cover for access to:
2 A connector for 100BASE-FX optical interface (MT-RJ).
3 A standard (RJ45) connector for 10BASE-T/100BASE-TX interface.

Characteristics

Type of module			140 NOE 771 00	140 NOE 771 10	140 NOE 771 01	140 NOE 771 11	140 NWM 100 00
Transparent Ready services	Class		B20	C20	B30	C30	D10
	Standard Web server		"Rack Viewer" access to the product description and status and to the PLC diagnostics "Data editor" access to the configuration functions and variables				
	FactoryCast configurable Web server	Editor for creating Web page mimics	–	Yes	–	Yes	
		User Web page hosting (available size)	–	Yes	–	Yes (8 Mb)	
	FactoryCast HMI active Web server		–				Yes *(1)*
	Standard Ethernet TCP/IP communication services		Modbus TCP messaging (read/write data words)				
	Ethernet TCP/IP advanced communication services	I/O Scanning	Yes	–	Yes (between 128 stations)		–
		Global Data	–	–	Yes		
		FDR server	–	–	Automatic assignment of IP address and network parameters		–
		NTP time synchronization	Yes		Yes		–
		SMTP e-mail notification	Yes		Yes		–
		SNMP network administrator	Yes				SNMP agent
		Pass band management	–		Yes		–
Redundancy service			Compatible with Hot Standby redundant architecture				–
Structure	Physical interface		10BASE-T/100BASE-TX (RJ45) or 100BASE-FX (MT/RJ)				
	Data rate		10/100 Mbit/s				
	Medium		Twisted pair/optical fiber				
Network module	Operating temperature		0...+ 60°C				
	Relative humidity		10...95% non condensing during operation				
	Degree of protection		IP 20				
	Power supply		Via the power supply of the rack supporting the processor				
	Conformity to standards		UL 508, cUL, CSA 22.2-142, FM Class 1 Division 2, CE				
	LED indicators		Rack operational (Active), module ready (Ready), network active (Link) Ethernet network status (Run), download mode (Kernel), Full-duplex mode (Fduplex) Transmission/reception activity (TxAct/RxAct), 10 Mbps or 100 Mbps data rate (10MB/100MB) Collision detection (Coll), Ethernet module fault (Fault)				

(1) Database management, arithmetic and logic calculations, automatic e-mail transmission on process event, connection to relational databases.

References

140 NOE 771 ●1/NWM 100 00

Description	Data rate	Transparent Ready class	Reference	Weight kg
Ethernet TCP/IP modules	10/100 Mbps	B20	140 NOE 771 00	0.345
		C20	140 NOE 771 10	0.345
		B30	140 NOE 771 01	0.345
		C30	140 NOE 771 11	0.345
		D10	140 NWM 100 00	0.345

RIO cable topologies

A single-cable RIO topology

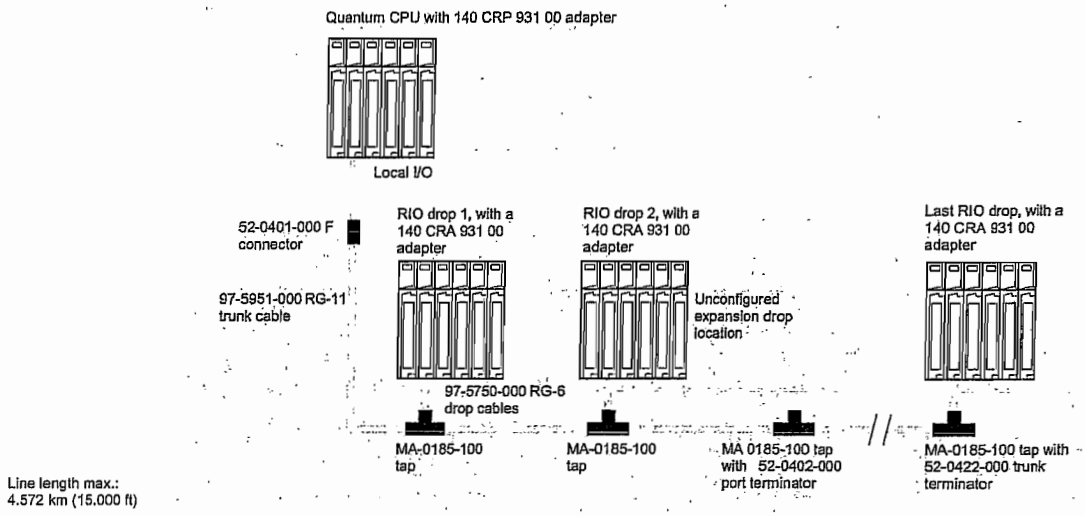

An MA-0185-100 tap is required for every drop on the system to electrically isolate the drop from the trunk and protect the system from impedance mismatches and cable disconnections. A minimum signal strength of 14dB is required between the trunk and each drop to ensure correct operation. The signal loss on the trunk cable as it crosses the tap is less than 1dB. A total of 35 dB is available from the head-end RIO processor. The entire cabling architecture must not exceed this system limit. For systems that require high availability, a redundant-cable option is available to protect the system from cable breaks and damaged connectors. With two cables connected between the host and each drop, a single cable break does not disrupt communications. If a cable break occurs, a health bit is set to indicate the problem node and faulty cable. For preventative maintenance, the system also provides retry counters for all communication transactions to all nodes. High retry counts on a cable in a specific node could indicate connection problems that can be scheduled and corrected prior to unwanted downtime.

A redundant-cable RIO topology

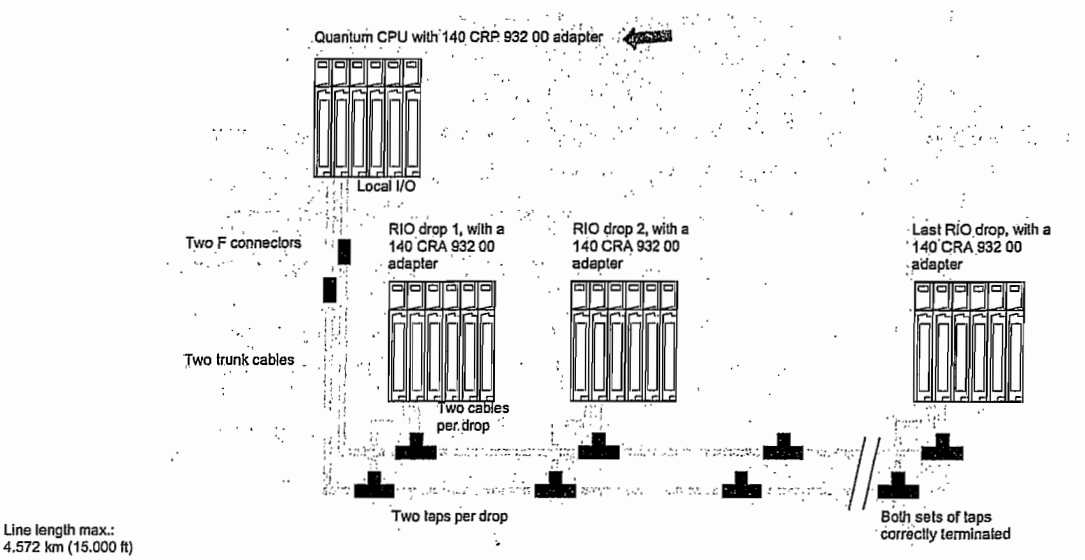

Head-end and drop adapter characteristics

Model			140 CRP 931 00	140 CRP 932 00	140 CRA 931 00	140 CRA 932 00
Type			Head-end		Drop adapter	
Drop type			Quantum, 200/500/800 series or Symax (any mix)		–	
I/O type			–		Quantum	
Modules/drop			31 drop adapters max.		27 I/O modules max.	
Words/drop			64 in/64 out words			
ASCII			2 ports per drop, 32 ports (16 drops), max. (requires use of AS-P892-000, AS-J892-101/102, or AS-J290-0X0 at the RIO drops).		–	
Coax termination		Ω	Internal 75			
Coax shield			Tied to chassis ground		Capacitor to ground	
Data transfer rate		Mbit/s	1.544			
Dynamic range		dB	35			
Isolation		⎓	500 V coaxial cable, center conductor to ground			
Cable connections	Single cable		One "F" type female connector (right angle adapter)			
	Redundant cable		Two "F" type female connectors (right angle adapter)			
General	Holdup time		–		Software configurable NOTE: In the event of a communication loss with the remote processor, output modules during this time will retain their last operating state. Input module data will be held in the system controlling CPU. After this time, output modules will assume their predefined timeout states and inputs will be zeroed by the CPU.	
	Diagnostics		Power Up Memory check LAN controller check		Power Up and Runtime Executive checksum RAM address/data	
	Maximum number of CRP supported by the controller		1 head-end per Quantum CPU		–	
	Bus current requirement	mA mA	One channel: 600 Dual channel: 750			
	Power dissipation	W W	One channel: 3 Dual channel: 3.8			
Agency approvals			UL 508, CSA 22.2-142, cUL, FM Class 1 Div.2, CE			

Fiber optic cable considerations

To use a fiber optic link in a RIO network, consider the following when selecting fiber optic cable from a vendor:

- For most applications, 62.5/125 µm fiber is recommended because of its relatively low loss and low signal distortion. However, in high optical power applications, such as those that use splitters or star couplers, the 100/140 µm fiber should be used.

- Wherever possible, select a multiconductor cable. It is inexpensive; it provides a backup path in case a cable gets cut in the process of pulling it; and you can use the extra path for voice, video, or other communications.

Accessories

Description		Length	Reference	Weight kg (lb)
Backplane expander		—	140 XBE 100 00	–
Expander cables		1 m	140 XCA 717 03	–
		2 m	140 XCA 717 06	–
		3 m	140 XCA 717 09	–

Description		Quantity	Reference	Weight kg (lb)
Tap (connects a drop cables to the trunk cable)		1 tap	MA 0185 100	–
Splitter (splits a signal from a single cable for two-cable use)		–	MA 0186 100	–
Tap terminator (for unused drop locations)		1 terminator	52 0402 000	–
Trunk terminator (for last tap on the network)		1 terminator	52 0422 000	–
F connector cassette	for RG-6 quad-shield cable	10 connectors	MA 0329 001	–
	for RG-6 cable, with silicon rubber boots	12 connectors	52 0400 000	–
	for RG-11 cable	6 connectors	52 0401 000	–
Right-angle F adapter for semi-rigid cable		1 adapter	52 0480 000	–
BNC connector for RG-6 quad-shield cable		1 connector	52 0488 000	–
F-to-BNC adapter for RG-11 cable		1 adapter	52 0614 000	–
BNC jack to male F connector (with J890/J892 drop adapters)		1 jack	52 0724 000	–
BNC angle adapter		1 adapter	MA 9002 780	–
BNC in-line terminator		1 terminator	60 0513 000	–
Wire stripper	RG-6	1 tool	60 0528 000	–
	RG-11	1 tool	60 0530 000	–
Replacement blade pack	RG-6	2 blades	60 0529 000	–
	RG-11	2 blades	60 0531 000	–
Ground block		1 block	60 0545 000	–
Crimping tools	F connector on RG-6	1 tool	60 0544 000	–
	BNC connector on RG-6	1 tool	043509432	–
Cable cutter		1 tool	60 0558 000	–

The Modicon TSX Quantum Automation Series supports a full range of discrete I/O modules designed to interface with a wide variety of field devices. All modules meet internationally accepted IEC electrical standards that ensure reliability in harsh operating environments. For even better protection and extended life in extremely harsh environments, you can have your modules conformally coated.

Fully software-configurable

All Quantum I/O modules can be completely configured using Concept or Modsoft. The ability to specify an I/O address for each module in software makes it easy to add or change modules in your configuration without physically changing the application program.

Defining the failure mode of an output module

Quantum gives you the ability to predefine how a discrete output point will respond if for any reason the module stops being serviced. You can configure the module in software so that the outputs:

- Turn off
- Go to a predefined safe state
- Hold the last value they received before the watchdog timer expired

Failure modes can be defined on a point-by-point basis. In the event of a complete module failure, the fail state settings you have specified can be sent to the replacement module.

Mechanical keying for added security

Optionally, you can insert mechanical keys between the I/O module and the terminal strip to ensure that the field wiring and the module type are properly matched. Keying codes are unique for each module type. You can also implement mechanical keying for unique slot locations so that a rack full of similar modules with similar keying codes will not be incorrectly connected. Keys are shipped with the I/O modules. They do not need to be ordered separately.

I/O connectors

Each I/O module requires an I/O connector (P/N 140 XTS 002 00), which can be ordered separately. The same connector can be used with all modules.

Description

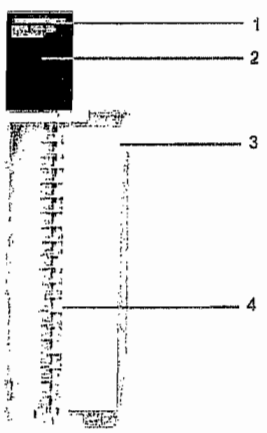

1 Model number and color code.
2 LED indicator panel.
3 Removable, hinged door and customer identification label.
4 Terminal block.

Visual status and diagnostic information

Extensive LED information is available on each module. Information includes activity on the I/O points and specific module features such as field wiring fault indication and blown fuses. Visual indication of comunication health is provided on an Active display, which can be used for troubleshooting.

32-point discrete I/O modules

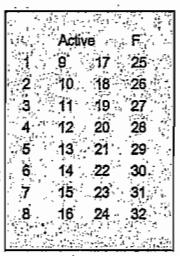

LED	Color	Indication when on
Active	green	Bus communication is present
F	red	External fault detected
1...32	green	The respective input/output is turned on

16-Point discrete I/O modules

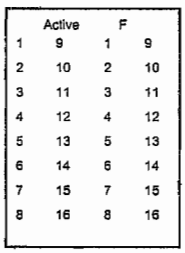

LED	Color	Indication when on
Active	green	Bus communication is present been detected
F	red	A fault (external to the module) has been detected
1 ... 16	green	The indicated point or channel is turned on
1 ... 16	red	There is a fault on the indicated point or channel

Discrete Bi-directional modules

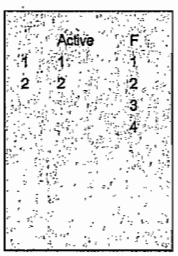

LED	Color	Indication when on
Active	green	Bus communication is present
F	red	No voltage supply for outputs or inputs out of tolerance
1 and 2 left row	green	Output is turned on
1 and 2 middle row	red	Fault detected on the output point
1...4 right row	red	Fault detected on the input point

V a.c. input specifications

Model			140 DAI 540 00	140 DAI 543 00	140 DAI 553 00	140 DAI 740 00	140 DAI 753 00
Number of inputs			16	16	32	16	32
Number of groups			16	2	4	16	4
Inputs/group			1	8	8	1	8
Input voltage		~	115 V			230 V	
LEDs			Active 1...16 (green)	Active 1...16 (green)	Active 1...32 (green)	Active 1...16 (green)	Active 1...32 (green)
Addressing requirements		words	1 input	1 input	2 input	1 input	2 input
Operating input 50 Hz	on	~	85...132 V			175...264 V	170...264 V
	off		0...20 V			0...40 V	0...40 V
	current	mA	11.1 max			9.7 max	2.6 max
	impedance	kΩ	14.4 capacitive			31.8 capacitive	32
60 Hz	on	~	79...132 V			165...264 V	158...264 V
	off		0...20 V			0...40 V	0...40 V
	current	mA	13.2 max			11.5 max	
	impedance	kΩ	12 capacitive			26.5 capacitive	27
Frequency range		Hz	47...63				
Maximum leakage current		mA	2.1			2.6	
Absolute maximum input	continuous	~	132 V			264 V	264 V
	10 s		156 V			300 V	312 V
	one cycle		200V			400 V	400 V
Response time Off - on	minimum	ms	4.9				
	maximum		0.75 x line cycle				
On - off	minimum		7.3				
	maximum		12.3				
Isolation		~	1780 V for 1 min input-to-input 1780 V for 1 min input-to-bus	1780 V for 1 min group-to-group 1780 V for 1 min group-to-bus	1780 V for 1 min group-to-group 1780 V for 1 min group-to-bus	1780 V for 1 min input-to-input 1780 V for 1 min input-to-bus	1780 V for 1 min group-to-group 1780 V for 1 min group-to-bus
Bus current requirement		mA	180	180	250	180	250
Power dissipation		W	5.5 max	5.5 max	10.9 max	5.5 max	5 max
Fusing	Internal		none				
	External		user discretion				

Relay output module specifications

Model		140 DRA 840 00	140 DRC 830 00
Number of outputs		16 normally open	8 normally open/normally closed pairs
LEDs		Active 1...16 (green) indicates point status	Active 1...8 (green) indicates point status
Addressing requirements		1 output word	0.5 output word
Voltage Working	∼ ⎓ ⎓	20...250 V 5...30 V 30...150 V (reduced load current)	
Maximum load current Each point	A	2 max, at ∼ 250 V or ⎓ 30 V @ 60°C ambient resistive load 1 tungsten lamp load 1 @ a power factor of 0.4 1/8 hp @ ∼ 125/250 V	5 max, at ∼ 250 V, ⎓ 30 V @ 60°C ambient resistive load 2 tungsten lamp load 3 @ a power factor of 0.4 1/4 hp @ ∼ 125/250 V
Each point (30...150 V)	⎓	300 mA (resistive load) 100 mA (L/R = 10 msec)	300 mA (resistive 100 mA (L/R = 10 msec)
Maximum module current*	A	–	40
Minimum load current	mA	50 Note: minimum load current if the contact is used at rated loads of ⎓ 5...30 V or ∼ 20...250 V	
Per point	A	2 max, at ∼ 250 V or ⎓ 30 V @ 60°C ambient resistive load	–
Maximum frequency (F)	Hz	–	30 resistive loads or $F = \frac{0.5}{I^2 L}$ where: L=Load Inductance (Henry) I=Load Current (A)
Surge current maximum Per point	A	10 capacitive load @ = 10 ms	20 capacitive load @ = 10 ms
Switching capability	VA	500 resistive load	1250 resistive load
Response time (resistive loads) Off - on	ms	10 (max)	
On - off	ms	20 (max)	
Relay contact life Mechanical operations		10,000,000	
Electrical operations		200,000 (resistive load @ max voltage and current)	100,000 (resistive load @ max voltage and current)
Electrical operations (⎓ 30...150 V)*		100,000, 300 mA (resistive load) 50,000, 500 mA (resistive load) 100,000, 100 mA (L/R = 10 msec) 100,000 Interposing Relay (Westinghouse Style 606B, Westinghouse type SG, Struthers Dunn 21 x 13 x P)	
Relay type		Form A	Form C, NO / NC contacts
Contact protection		Varistor, 275 V (internal)	Over voltage (suppression diode)
Isolation Channel-to-channel	∼	1780 V rms for 1 minute	
Field-to-bus	∼ ⎓	1780 V rms for 1 minute 2500 V for one minute	
Bus current requirement	mA	1100	560
Power dissipation	W	5.5 + 0.5 x N = Watts (where N = the number of points on)	2.75 W + 0.5 x N = Watts (where N = the number of points on)
External power		Not required for this module	
Fusing Internal		None	
External		User discretion	

Discrete input modules

Voltage	Description	Logic	Reference	Weight kg (lb)
~ 24 V	16 isolated inputs	–	140 DAI 340 00	0,300 (0.66)
	4 groups of 8 inputs	–	140 DAI 353 00	0,340 (0.75)
~ 48 V	16 isolated inputs	–	140 DAI 440 00	0,300 (0.66)
	4 groups of 8 inputs	–	140 DAI 453 00	0,300 (0.66)
~ 120 V	16 isolated inputs	–	140 DAI 540 00	0,310 (0.68)
	2 groups of 8 inputs	–	140 DAI 543 00	0,300 (0.66)
	4 groups of 8 inputs	–	140 DAI 553 00	0,330 (0.73)
~ 230 V	16 isolated inputs	–	140 DAI 740 00	0,350 (0.77)
	4 groups of 8 inputs	–	140 DAI 753 00	0,300 (0.66)
⎓ 5 V TTL	4 groups of 8 inputs	source	140 DDI 153 10	0,450 (0.99)
⎓ 24 V	4 groups of 8 inputs	sink	140 DDI 353 00	0,300 (0.66)
		source	140 DDI 353 10	0,300 (0.66)
⎓ 24 V	6 groups of 16 inputs	sink	140 DDI 364 00	0,300 (0.66)
⎓ 125 V	3 groups of 8 inputs	sink	140 DDI 673 00	0,300 (0.66)
⎓ 10...60 V	8 groups of 2 inputs	sink	140 DDI 841 00	0,300 (0.66)
	4 groups of 8 inputs	sink	140 DDI 853 00	0,295 (0.65)
⎓ 24 V	4 groups of 8 inputs	sink	140 DSI 353 00	0,300 (0.66)

Discrete output modules

Voltage	Description	Logic	Reference	Weight kg (lb)
~ 24...230 V	16 isolated outputs	–	140 DAO 840 00	0,485 (1.07)
~ 24...115 V	16 isolated outputs	–	140 DAO 840 10	0,485 (1.07)
~ 100...230 V	4 groups of 4 outputs	–	140 DAO 842 10	0,450 (0.99)
~ 24...48 V	4 groups of 4 outputs	–	140 DAO 842 20	0,450 (0.99)
~ 24...230 V	4 groups of 4 outputs	–	140 DAO 853 00	0,450 (0.99)
⎓ 5 V TTL	4 groups of 4 outputs	sink	140 DDO 153 10	0,450 (0.99)
⎓ 24 V	4 groups of 4 outputs	source	140 DDO 353 00	0,450 (0.99)
		source	140 DDO 353 01	0,450 (0.99)
		sink	140 DDO 353 10	0,450 (0.99)
⎓ 19.2...30 V	6 groups of 16 outputs	source	140 DDO 364 00	0,450 (0.99)
⎓ 24...125 V	2 groups of 6 outputs	source	140 DDO 885 00	0,450 (0.99)
⎓ 10...60 V	1 groups of 16 outputs	source	140 DDO 843 00	0,450 (0.99)
⎓ 150 V/~ 250 V relay	16 relay outputs	normally open	140 DRA 840 00	0,410 (0.90)
	8 relay outputs	normally closed/open	140 DRC 830 00	0,300 (0.66)
⎓ 10...30 V	4 groups of 8 outputs	source	140 DVO 853 00	0,300 (0.66)

References (continued)

Discrete combination I/O modules

Number of input/output	Number of input	Number of output	Reference	Weight kg (lb)
24	2 groups of 8 inputs ~ 125 V	2 groups of 4 output ~ 125 V	140 DAM 590 00	0,450 (0.99)
	2 groups of 8 inputs (1) ⎓ 24 V	2 groups of 4 output (1) ⎓ 24 V	140 DDM 390 00	0,300 (0.66)
8	1 group of 4 inputs(1) ⎓ 125 V	1 group of 4 isolated outputs (2) ⎓ 125 V	140 DDM 690 00	0,300 (0.66)

Accessories

Description	Quantity	Reference	Weight kg (lb)
Terminal block, 40 points (required for all modules)	–	140 XTS 002 00	0,150
Dummy module without terminal block	–	140 XCP 500 00	–
Dummy module with cover	–	140 XCP 510 00	–
Jumper kit for terminal block	12	140 XCP 600 00	–
Discrete input simulator, 16 switches for the DAI 540 00 and DAI 740 00	–	140 XSM 002 00	–
Field I/O Power Connector (IP20 rated)	–	140 XTS 005 00	0,150 (0.33)

Connecting cables for I/O modules fitted with HE 10 connectors

Description	Use	Lenght	Section	Reference	Weight kg
Connecting cables	2 HE 10 connectors for Telefast 2 system	0.5 m	0.324 mm²	TSX CDP 053	0,085
		1 m	0.324 mm²	TSX CDP 103	0,150
		2 m	0.324 mm²	TSX CDP 203	0,280
		3 m	0.324 mm²	TSX CDP 303	0,410
		5 m	0.324 mm²	TSX CDP 503	0,670

Spare parts

Description	Quantity	Reference	Weight kg
Coding kit for terminal block	60	140 XCP 200 00	–

(1) Sink.
(2) Sink or source.

140 DAI 540 00

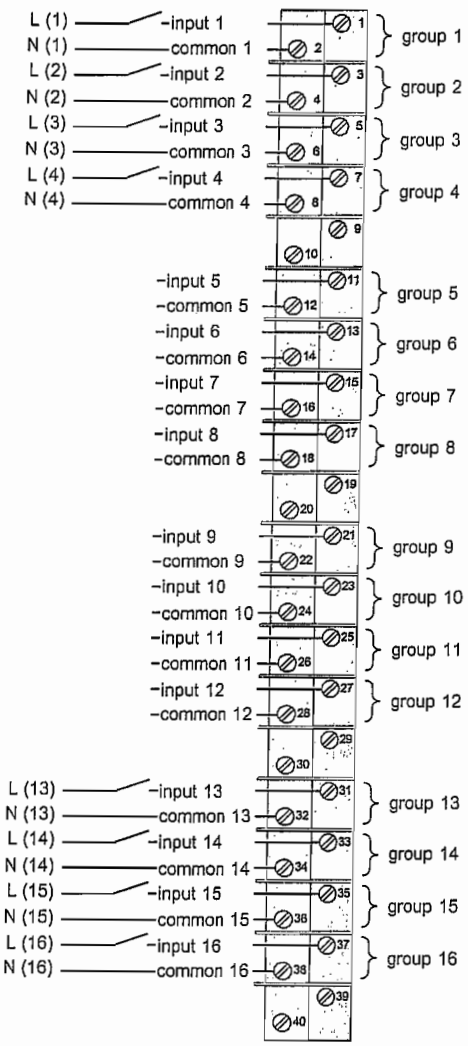

140 DAI 553 00

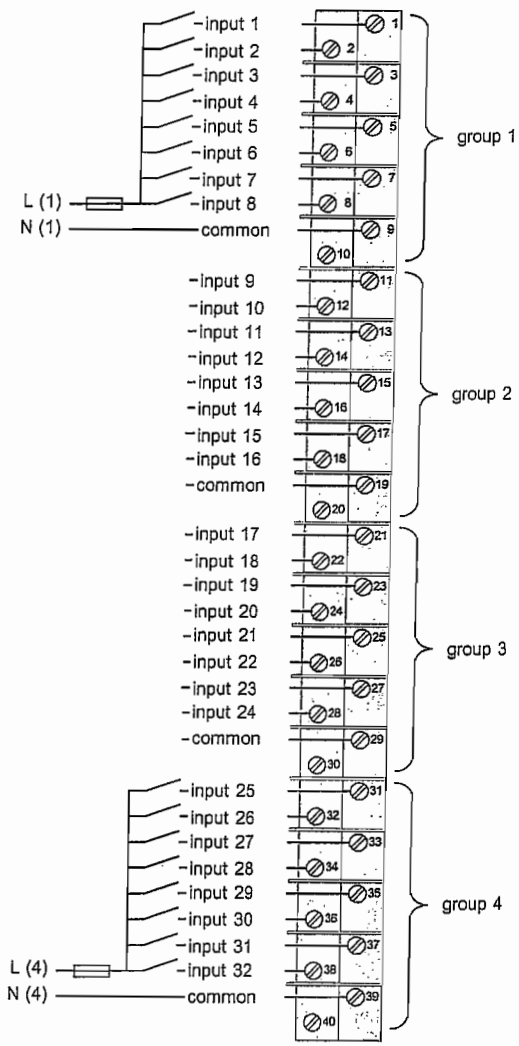

2

Relay output module wiring diagrams

140 DRA 840 00

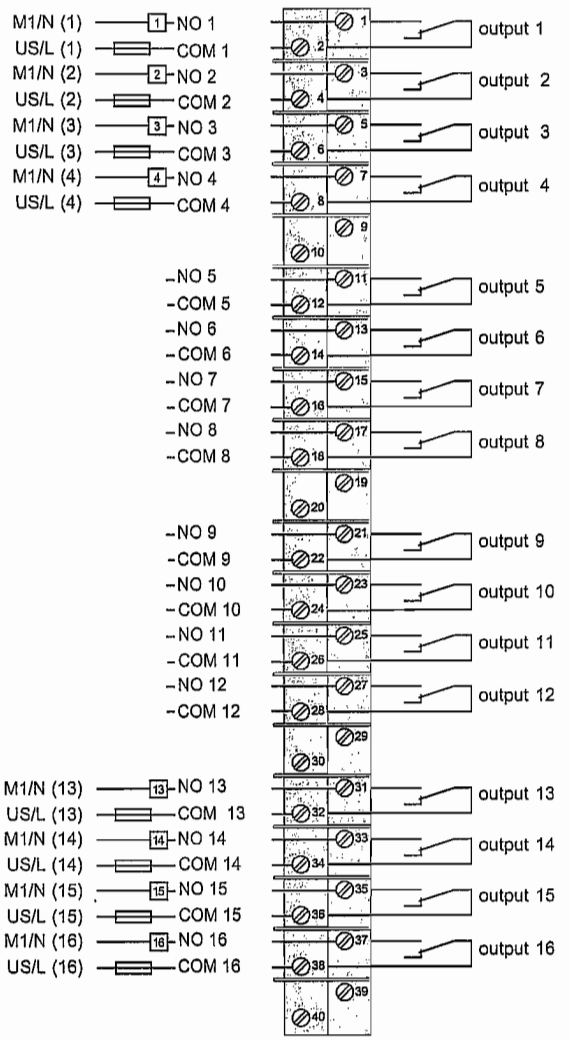

140 DRC 830 00

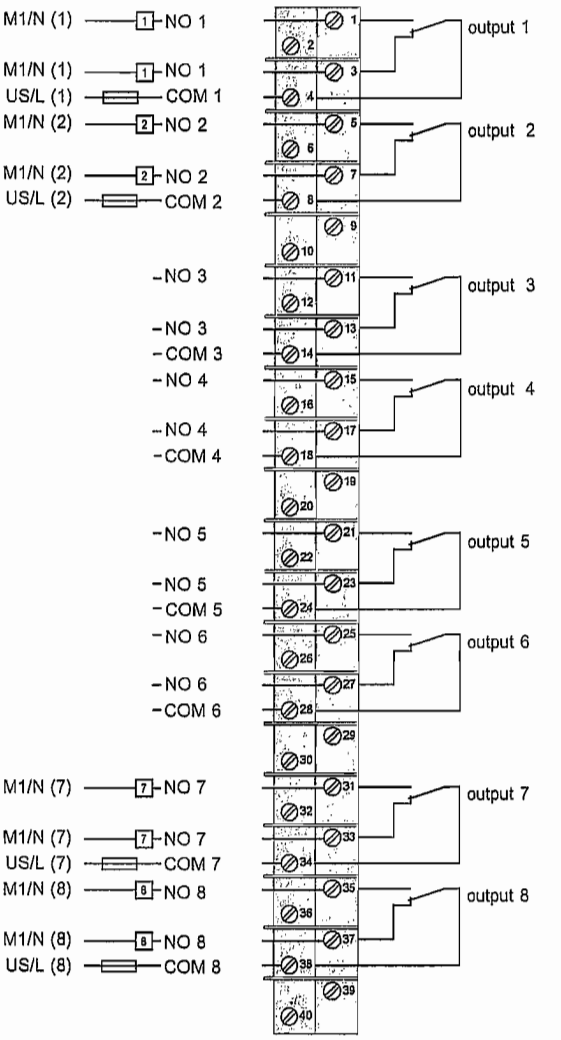

Presentation

The Modicon Quantum Automation Series supports a full range of analog I/O modules designed to interface with a wide variety of field devices. All modules meet internationally accepted IEC electrical standards that ensure reliability in harsh operating environments. For even better protection and extended life in extremely harsh environments, you can have your modules conformally coated.

Fully software-configurable

All Quantum I/O modules can be completely configured using Concept or Modsoft. The ability to specify an I/O address for each module in software makes it easy to add or change modules in your configuration without physically changing the application program.

I/O Map zooming

Analog and special-purpose modules frequently require that you specify particular modal or operational parameters for different functions in addition to the standard I/O addressing requirements. Quantum's ability to configure multi-function modules via software eliminates the need for traditional hardware DIP switches or complex application programming. A software capability called I/O Map zooming allows you to zoom into a setup screen where you can initialize or change the module's operating parameters. This I/O Map zoom technique is used on multi-function analog input modules, high-speed counters, single-axis motion modules and temperature-sensing modules such as thermocouples and RTDs.

Defining the failure mode of an output module

Quantum gives you the ability to predefine how an analog output channel will respond if for any reason the module stops being serviced. You can configure the module in software so that the output channels:

- Go to zero
- Go to a predefined safe state
- Hold the last value they received before the watchdog timer expired

Failure modes can be defined on a channel-by-channel basis. In the event of a complete module failure, the fail state settings you have specified can be sent to the replacement module.

Mechanical keying for added security

Optionally, you can insert mechanical keys between the I/O module and the terminal strip to ensure that the field wiring and the module type are properly matched. Keying codes are unique for each module type. You can also implement mechanical keying for unique slot locations so that a rack full of similar modules with similar keying codes will not be incorrectly connected. Keys are shipped with the I/O modules. They do not need to be ordered separately.

I/O connectors

Each I/O module requires an I/O connector (P/N 140 XTS 002 00), which can be ordered separately. The same connector can be used with all modules.

Description

The front panel of 140 A●I/A●O/AMM analog input or output modules comprises:

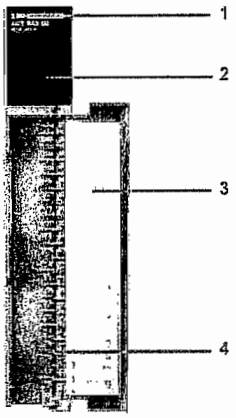

1 Model number and color code.

2 LED indicator panel
Active (green): bus communication is present been detected,
F (red): a fault (external to the module) has been detected,
1 ... 16 (green): the indicated point or channel is turned on,
1 ... 16 (red): there is a fault on the indicated point or channel.

3 Removable, hinged door and customer identification label.

4 Terminal block.

Input module characteristics

Model		140 ACI 030 00	140 AVI 030 00		
Number of channels		8 differential			
Addressing requirements		9 input words			
Input ranges (selectable on a per channel basis) bipolar		–	⎓ ± 10 V	⎓ ± 5 V	± 20 mA
unipolar		–	⎓ 0...10 V	⎓ 0... 5 V	0...20 mA
unipolar w/offset		–	⎓ 1... 5 V	4...20 mA	
Voltage input linear measuring range		⎓ 1...5 V	(input range) x 1.024		
absolute maximum	⎓	50 V			
impedance	MΩ	> 20			
Current input linear measuring range	mA	4...20	(input range) x 1.024		
absolute maximum	mA	25			
impedance	Ω	250 ± 0.03%			
Absolute accuracy error @ 25° C (voltage mode) typical		± 0.05% of full scale	± 0.03%		
maximum		± 0.1% of full scale	± 0.05% of full scale		
Linearity		± 0.04%	± 0.008%		
Accuracy drift w/temperature typical	%	± 0.0025 of full scale/ °C	± 0.0015 of full scale/ °C		
maximum	%	± 0.005 of full scale/ °C	± 0.004 of full scale/ °C		
Common mode rejection	dB	> -72 @ 60 Hz	> -80 @ 60 Hz		
Input filter		Single pole low pass, -3 dB cutoff @ 15 Hz, ± 20%	Single pole low pass, -3 dB cutoff @ 847 Hz, ± 20%		
Isolation channel-to-bus	⎓ ∼	⎓ 1000 V, 3000 Vpp, for 1 minute	⎓ 750 V, ∼ 500 V rms, for 1 minute		
Operating voltage channel-to-channel	⎓ ∼	⎓ 30 V max	⎓ 200 V, ∼ 135 V rms max		
Update time	ms	5 for a all channels	10 for a all channels		
Fault detection		Broken wire (4...20 mA mode) or under voltage range (1...5 V)	Broken wire in 4...20 mA mode Out of range		
Bus current requirement	mA	240	280		
Power dissipation	W	2	2.2		
External power		Not required			

Characteristics (continued)

Output module characteristics

Model		140 ACO 020 00	140 AVO 020 00
Number of channels		4	
Addressing requirements		4 out words	
Loop voltage	⎓	12...30 V	–
Loop resistance		R_{MIN}* = $\frac{VLoop - 30\ Vdc}{0.02A}$ * For a loop supply less than 30 volts, R_{MIN} is zero ohms. $R_{Max} = \frac{VLoop - 7\ Vdc}{0.02A}$ No external resistor is required for loop voltage supply < ⎓ 30 V.	–
Internal voltage drop	⎓	7 V min, 30 V max @ 20 mA	–
Voltage output ranges bipolar	⎓	—	± 10 V (min load resistance = 1 kΩ) (Jumper between reference - control terminals) ± 5 V (min load resistance = 500 Ω) (Jumper between reference - control and output - R terminals)
unipolar	⎓	—	0...10 V (min load resistance = 1 kΩ) (Jumper between output - R terminals) 0...5 V (min load resistance = 500 Ω) (Jumper between output - R and control - R terminals)
Output current		4...20 mA	± 10 mA max any range (outputs are short circuit-proof)
Source resistance		—	0.1 Ω
Resolution		12 bits	
Accuracy error @ 25° C		± 0.20% of full scale	± 0.15% of full scale
Linearity		±1 LSB	
Accuracy drift w/temperature typical		± 0.004% of full scale/°C	–
maximum		± 0.007% of full scale/°C	–
unipolar ranges		–	0.003% of full scale/°C typical 0.005% of full scale/°C max
bipolar ranges		–	0.004% of full scale/°C typical 0.007% of full scale/°C max
Isolation channel-to-channel		∼ 500 V @ 47...63 Hz or ⎓ 750 V for 1 minute	∼ 500 V @ 47...63 Hz for 1 minute
channel-to-bus		∼ 1780 V @ 47...63 Hz or ⎓ 2500 V for 1 minute	∼ 1780 V @ 47...63 Hz for 1 minute
Update time	ms	3 for all channels (simultaneous update)	3 for all channels
Settling time	µs	900 to ± 0.1% of the final value	700 to ± 0.1% of the final value (max)
Fault detection		Open circuit in 4...20 mA mode. Specific channel is identified when an open circuit is detected through the red channel LED.	None
Wire length	m	–	400 max

(1) Up to 60 V with an external loop resistor.

Characteristics (continued)

Output module characteristics

Model		140 ACO 020 00	140 AVO 020 00	140 ACO 130 00
Number of channels		See page 3/9		8
Addressing requirements	words	See page 3/9		8 output
Module ranges and resolution		See page 3/9		0.0 ... 25 mA, 0 ... 25,000 counts 0.0 ... 20 mA, 0 ... 20,000 counts 4.0 ... 20 mA, 0 ... 16,000 counts (default range) 4.0 ... 20 mA, 0 ... 4,095 counts
Loop voltage	⎓	See page 3/9		6 ... 30 V max
Internal voltage drop	⎓	See page 3/9		6 V min, 30 V max @ 25 mA
Accuracy error @ 25 °C		See page 3/9		± 0.2% of full scale
Linearity		See page 3/9		± 4 µA 0.0 ... 25.0 mA, 0 ... 25,000 counts ± 4 µA 4.0 ... 20.0 mA, 0 ... 16,000 counts ± 12 µA 4.0 ... 20.0 mA, 0 ... 4,095 counts ± 4 µA 0.0 ... 20.0 mA, 0 ... 20,000 counts
Absolute drift w/temperature	°C	See page 3/9		Typical: 0.004% of full scale Maximum: 0.007% of full scale
Isolation channel-to-channel		See page 3/9		None
Isolation field-to-bus		See page 3/9		∼ 1780 V for 1 minute
Update time	ms	See page 3/9		5 for all 8 channels
Settling time full scale step change	ms	See page 3/9		1.6 to 5% of the final value 3.2 to 0.1% of the final value
Fault detection		See page 3/9		Open circuit in 4 ... 20 mA mode. Specific channel is identified by the red channel LED. Also reported back to the controller in the I/O MAP status byte.
Bus current required	mA	480	700	550
Power dissipation	W	5.3 max	4.5 max	5.0
External power		See loop voltage on previous page	Not required for this module	See loop voltage above
Fusing internal		None	None	None
Fusing external		–	0.063 A, 250 V (1) Fuse type: 3 AG fast acting	None
Voltmeter Monitor range		1...5 V (main current loop must be active)	–	
Voltmeter Monitor scaling		V_{OUT} (Volts) = I_{LOOP} (mA) x 0.25	–	
Voltmeter Monitor output impedance	Ω	300 typical	–	
Voltmeter Monitor wire length	m	1 max	–	

(1) An external fuse is required on the master override signal when it is connected to an external source.

References

Analog input modules

Description	Range	Reference	Weight kg (lb)
8 channels, 12-bit, single-pole	4 ... 20 mA or ∼ 1 ... 5 V	140 ACI 030 00	0.300 (0.66)
16 channels, 0...25,000 counts	0...20 mA 0...25 mA 0...20 mA	140 ACI 040 00	0.300 (0.66)
8 channels, 13-bit, RTD	Ni or PT 100, 200, 500, 1000 Ω	140 ARI 030 10	0.300 (0.66)
8 channels, 16-bit, thermocouple	Type J, K, E, T, S, R, B and mV	140 ATI 030 00	0.300 (0.66)
8 channels, 16-bit, two-pole	⎓ ± 10 V or ± 20 mA	140 AVI 030 00	0.300 (0.66)

Analog output modules

Description		Reference	Weight kg (lb)
4 channels, 12-bit	4...20 mA	140 ACO 020 00	0.300 (0.66)
8 channels, 0...25,000 counts	0...20 mA 0...25 mA 4...20 mA	140 ACO 130 00	0.300 (0.66)
4 channels, 12-bit	⎓ ± 5 V, ± 10 V 0...5 V, or 0...10 V	140 AVO 020 00	0.450 (0.99)

Analog I/O modules

Description		Reference	Weight kg (lb)
4 inputs, 2 outputs	± 20 mA; ⎓ ± 5 V, ± 10 V 0...5 V, or 0...10 V; 4... 20 mA	140 AMM 090 00	0.900 (1.98)

Accessories

Description	Quantity	Reference	Weight kg (lb)
Terminal block, 40 points (required for all modules)		140 XTS 002 00	0.150 (0.33)
Coding kit for terminal block	60 each	140 XCP 200 00	–
Field I/O power connector (IP20 rated)		140 XTS 005 00	0.150 (0.33)
Cablefast Cabling Systems		See page 9/4	–

Wiring diagrams

140 ACI 030 00

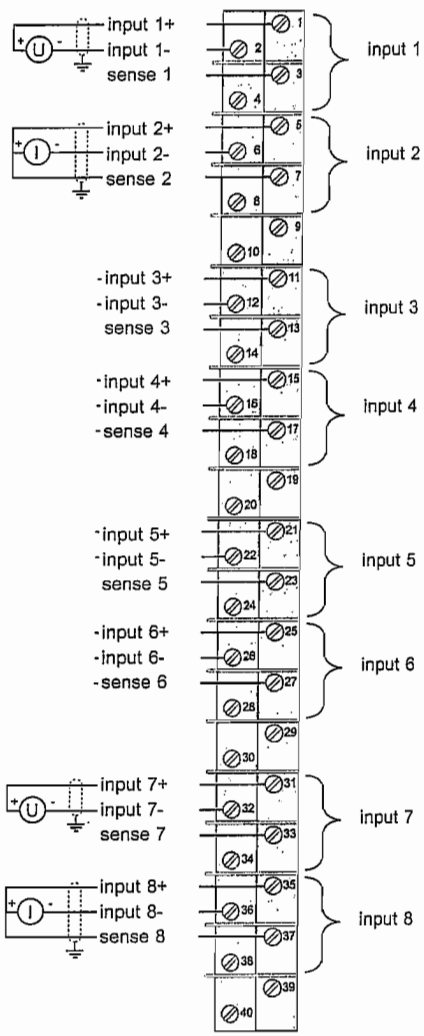

140 ACO 020 00

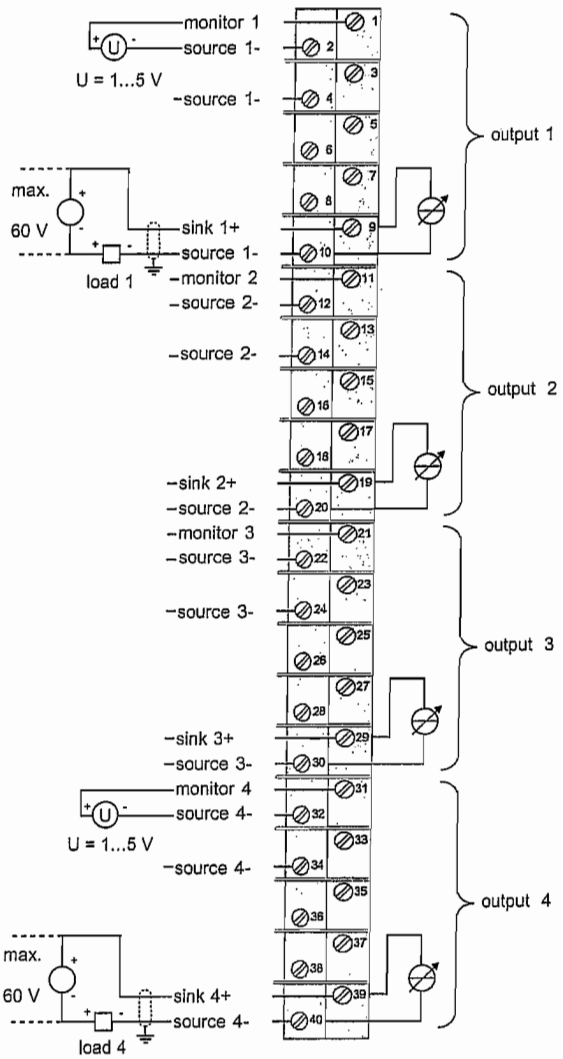

Connections (continued)

Wiring diagrams

140 AVI 030 00

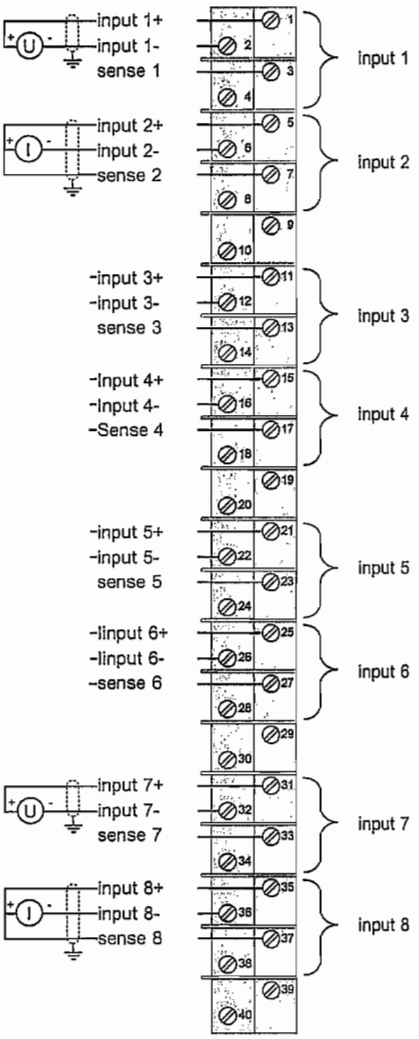

140 AVO 020 00

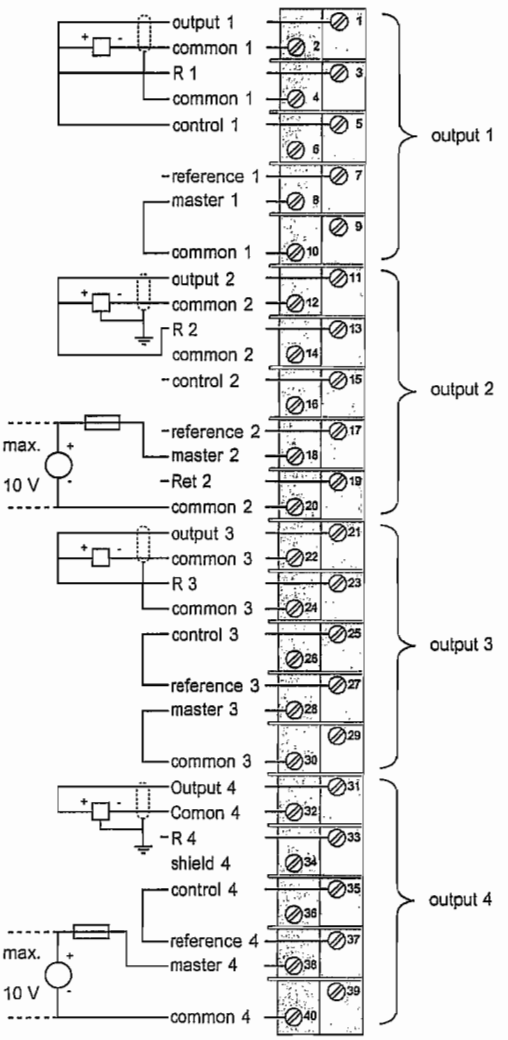

The various wiring options are:
channel 1 for 0...+5 V d.c.,
channel 2 for 0...+10 V d.c.,
channel 3 for -5...+5 V d.c.,
channel 4 for -10...+10 V d.c.

Industrial PCs with 12 or 15" touch screen

Magelis Compact *i* **PC**

The *optimum solution* for machines

In its reduced size, the Magelis Compact *i*PC industrial PC integrates the latest PC technologies. Totally open, its inherent qualities position it as an attractive and upgradable solution, particularly for machine manufacturers.

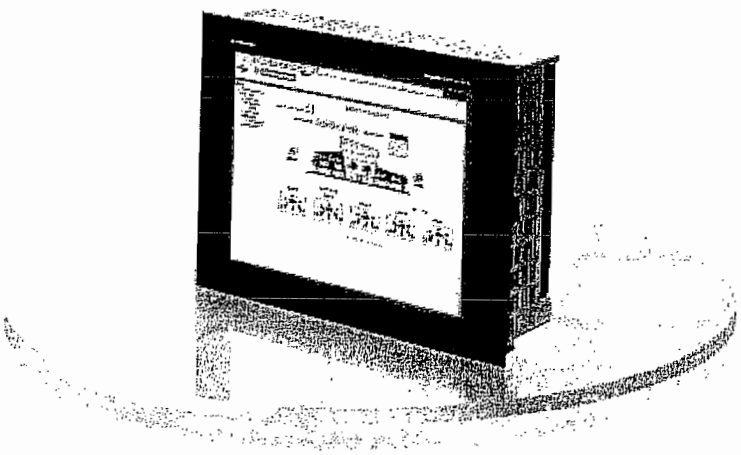

100 mm depth for 8 kg!

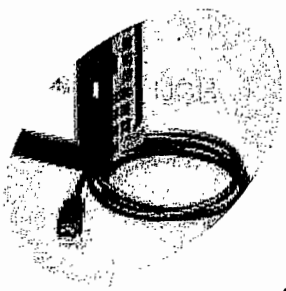

Enhanced know-how

Open
Offer HMI solutions based on the latest technologies: Intel Pentium microprocessors, Microsoft Windows®, universal accessibility.
Easily integrate Magelis Compact *i*PC in all automated system architectures.

Quality interface
Screens are bright and high-contrast with wide viewing angle, enabling comfortable operator viewing even in difficult lighting conditions.

Economical design

Adaptable processing power
Depending on your application, determine the usable processing power of your processor:
- VIA 667MHz or Celeron M 1.3GHz for your MMI.
- Intel Pentium 4 Mobile –1.7GHz for your supervision.

Freedom of choice
Depending on the environment of your machine, choose:
- Embedded Ethernet TCP/IP.
- Optional dual network, Ethernet and/or wireless.
- PCI or PCMCIA extension cards.

a brand of Schneider Electric

Telemecanique

Play integration

Vijeo Designer control software: Transform your *i*PC into an operator terminal, taking advantage of Windows® openness.

Vijeo Look supervision software for simpler application development:

- Ready-to-run animations with a library of nearly around 100 graphical objects.
- Systematic alarm and fault recording for simplified diagnostics.
- Preconfigured real time data server for Telemecanique Modicon controllers.
- Telemaintenance to simplify diagnostics and maintenance.

Easy installation and integration

- Compact, install virtually anywhere. 100 mm depth for 8kg, it is among the shallowest on the market. And its reduced width and height put the accent on the screen.
- Simple, easy to install. You gain precious time on your operations.
- Upgradable, Magelis Compact *i*PC offers consistent identical dimensions and can be replaced by a dedicated terminal, Magelis Smart *i*PC or *i*Display screen.

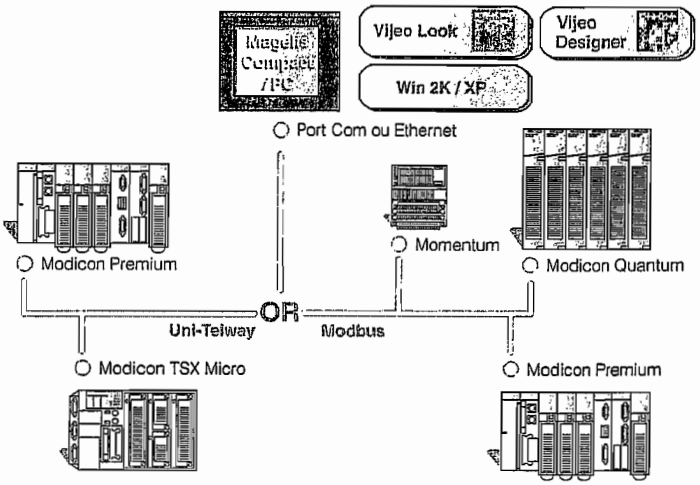

	Magelis Compact iPC 12"			Magelis Compact iPC 15"		
Touch screen	12" LCD TFT	12" LCD TFT	12" LCD TFT	15" LCD TFT	15" LCD TFT	15" LCD TFT
Resolution	XGA 1024 x 768					
Front panel ports	1 x USB					
Processor	Celeron M@1.3GHz			VIA @667MHz or Premium 4 M 1.7GHz		
RAM	256MB → 1024MB			256MB → 512MB		
Internal drive	≥ 20GB					
Reader	-			Diskette and CD-ROM		
Extension	1 x PCI, 1 x PCMCIA type I (type III)			1 x PCI, 2 x PCMCIA type I (or 1 type III)		
Ethernet ports	2 x 10/100 RJ45			1 x 10/100 RJ45		
I/O ports	4 x USB, 1 x RS232			2 x USB, 2 x RS232, 2 x PS2, 1 x LPT1		
Power supply	AC 100...240V					
Certifications	UL508, CSA			UL508, UL1604, CSA		
Dimensions	313 x 239 x 100			395 x 294 x 100		
Applications		Vijeo Designer RT*	Vijeo Look RT*/BT*		Vijeo Designer RT*	Vijeo Look RT*/BT*
Windows 2000	MPCKT22NAA00N			MPCKT52NAA00N MPCKT55NAA00N	—	MPCKT52NAA00A MPCKT55NAA00B
Windows xp Professional	MPCKT22NAX00N	MPCKT22NAX00R	MPCKT22NAX00A	MPCKT52NAX00N MPCKT55NAX00N	MPCKT52NAX00R MPCKT55NAX00R	MPCKT52NAX00A MPCKT55NAX00B

*RT: Run Time - *BT: Built Time

Schneider Electric Industries SAS

Head Office
89, bd Franklin Roosevelt
92506 Rueil-Malmaison Cedex
FRANCE

www.schneider-electric.com
www.telemecanique.com

Owing to changes in standards and equipment, the characteristics given in the text and images in this document are not binding until they have been confirmed with us.
Design: Pema-Cohérents
Photos: Schneider Electric
Print:

DIA5ED1051204BEN

12/2005

InTouch 9.5

Visualization Software

Wonderware's InTouch 9.5 visualization software combines the world's leading HMI software with cutting-edge graphical advances to enable customers to obtain tremendous improvements in operational and engineering productivity. The InTouch 9.5 HMI continues to outshine its competition with advances that include easy-to-use, object-oriented programmable graphics and powerful communication connectivity. InTouch software is an open and extensible HMI that enables flexibility in custom application design with connectivity to the broadest set of automation devices in the industry.

PRODUCT HIGHLIGHTS

- Operational enhancements that streamline graphical windows while greatly expanding the amount of information available
- Leverages ArchestrA technology, decreasing the amount of time and cost of creating, modifying, deploying, maintaining and standardizing software applications
- Easy-to-use, open HMI solution that seamlessly integrates with legacy and new plant systems, enabling fast connectivity to real-time and historical information
- Preserves engineering efforts through re-use and standardization of graphical information
- Robust, intuitive script editor enables expert software engineers as well as non-programmers to quickly customize application functions
- Flexible and scalable architectures for small and large systems that can be easily expanded to meet future requirements

GAIN A COMPETITIVE ADVANTAGE WITH A UNIFIED APPLICATION ENVIRONMENT

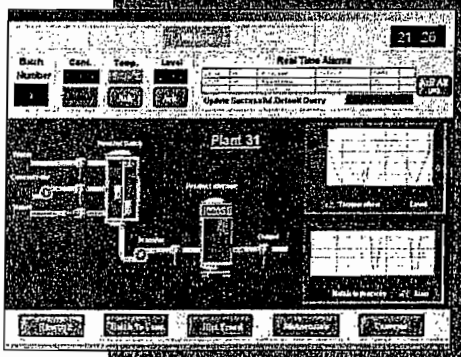

InTouch 9.5 software is built on the groundbreaking ArchestrA architecture. ArchestrA technology enables users to have a unified environment that integrates information from multiple disparate sources and provides a common infrastructure and set of services. A significant competitive advantage is gained with the ability to design, build, deploy, maintain and standardize applications with the lowest total cost of ownership. Benefits include:

- Easy updates to existing applications
- Dramatically decreased costs to develop new automation projects
- Substantially reduced implementation time

This architectural approach facilitates the easy extension and expansion of existing systems to stay competitive and increase manufacturing agility. In addition, users can quickly create applications that conform to company standards yet are versatile enough to be strategically deployed throughout an organization via the best-suited devices for increasing productivity and efficiency.

ARCHITECTURE BY ARCHESTRA

Every system in your plant, working in concert.™

invensys

Wonderware

Powering intelligent plant decisions in real time.

CREATE AND DEPLOY EASY-TO-USE APPLICATIONS

InTouch software enables users to quickly create and deploy graphical representations of real-time industrial processes. The InTouch HMI is used throughout the world, in virtually every country and industry. Wonderware's InTouch software is the proven world leader for HMI visualization and control of information.

Expansive Graphical User Interface (GUI) for Flexibility

The InTouch HMI empowers users to quickly and easily develop custom graphical views of their processes. Users can develop graphics with a variety of tools in Wonderware's WindowMaker graphical editing program, which includes:

- Standard graphical components
- Bitmap images
- ActiveX controls
- A graphics library that contains thousands of pre-configured industrial images
- SmartSymbol technology

Plant employees also can leverage advanced development tools such as pan and zoom and rubber-banding to improve the speed and accuracy of application development.

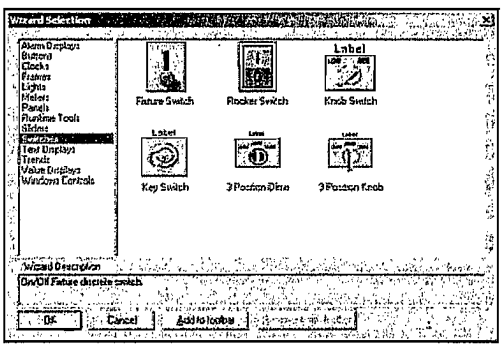

Powerful Wizards and Templates

SmartSymbols for Increased Productivity

Wonderware's InTouch HMI is SmartSymbol-enabled, which represents an enormous advancement in the creation, deployment and modification of graphical elements inside an application. SmartSymbols offer considerable savings by significantly reducing application engineering, testing and deployment time, and enabling the creation of reusable templates from graphics. These object-oriented graphics contain all the graphical, script and tag controls that an application object needs to be useful in a production environment.

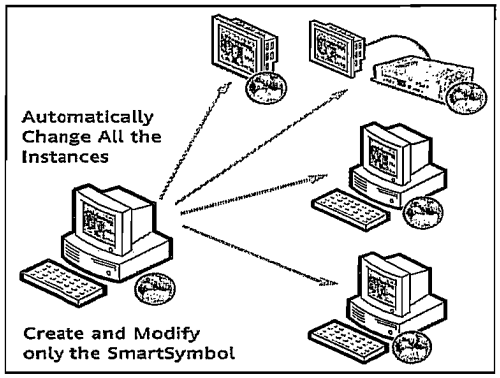

Rapid Change Propagation

SmartSymbol graphics enable rapid propagation of changes throughout the application and even across multiple networked PC nodes. Users only modify the SmartSymbol template and the changes automatically propagate throughout the application. This makes changing, upgrading, and modifying – as well as validating and revalidating applications after modification – very fast and simple.

Productivity Improvements

Using SmartSymbols increases productivity when creating new applications and modifying existing applications. New applications can be quickly created using standard SmartSymbol libraries, facilitating easier compliance with standard operating procedures. Existing applications can easily be enhanced by modifying the SmartSymbol template. Customers benefit from improved flexibility and greater productivity.

More Information, Less Screen Clutter

New "tooltips" and "mouse-over" capabilities enable users to obtain more information about the real-time data and graphics being displayed in the window. This results in streamlined, uncluttered screens that can quickly display vital information. Additionally, these capabilities provide context to data, enable faster analysis, and facilitate better understanding of displayed information.

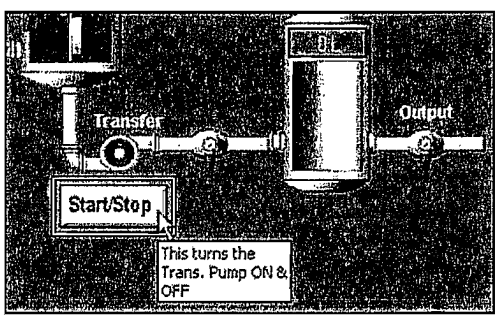

Powerful QuickScript Editor

With the QuickScript Editor, an InTouch application can be extended and customized to address specific system requirements, making InTouch software one

of the most flexible HMI products on the market. Scripts can be configured to execute based on numerous parameters, such as specific process conditions, data changes, application and windows events, keyboard strokes and ActiveX events. Users can also develop a library of scripts that can be re-used, simplifying the application and resulting in decreased initial engineering and application maintenance time as well as deployment.

The QuickScript Editor is simple-to-use and extremely powerful, enabling complete customization of applications with common expressions and structures, such as "greater than," "less than," "for-next" and "if-then-else" as well as advanced functions including mathematical expressions and string conversions.

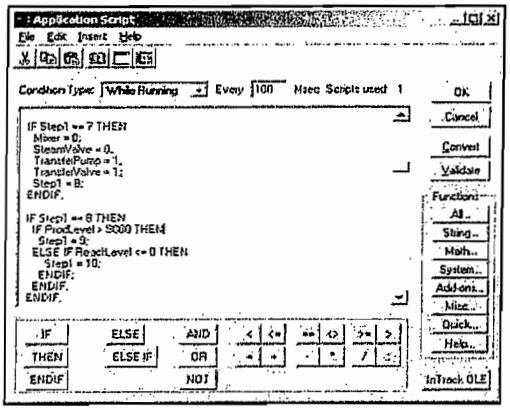

Easy-to-Use QuickScript Editor

A built-in validation engine enables the user to check scripts before deploying them, preventing runtime errors. In addition, for more advanced users, scripts can be written and edited directly in the script editor, or cut and pasted from other applications, encouraging re-use and saving engineering time.

The QuickScript Editor gives users the flexibility to quickly and easily customize applications. From novice to expert programmer, everyone benefits from InTouch scripting.

PROTECT YOUR SYSTEM WITH INTEGRATED SECURITY

Different levels of security are required, depending on the application's function, who needs access and the type of access required. InTouch 9.5 software provides many integrated options that enable users to choose security models and options that match their requirements. These include:

- **Access-Level Password Security** – limits user capabilities in the InTouch application based on areas of responsibility and authority
- **Microsoft Windows Authentication** – grants permissions to InTouch users authenticated on a domain controller or local computer, based on user identity and group affiliations
- **Data Level Security** – customers who have adopted Wonderware's Industrial Application Server also enjoy secure integration between InTouch software and Industrial Application Server applications, all the way down to the data level
- **FDA 21 CFR Part 11 Functionality** – built-in authentication fields, security script functions and variables make it easier for users to comply with government regulations
- **Enhanced Password Encryption** – passwords entered through the application can be encrypted and masked to provide a greater level of security and protection against unwarranted access to the application
- **FactoryFocus Read Only Software** – a view-only runtime version of the InTouch application that increases system security because no data can be changed
- **No Security** – for non-critical applications and specific situations where security of the information is not needed

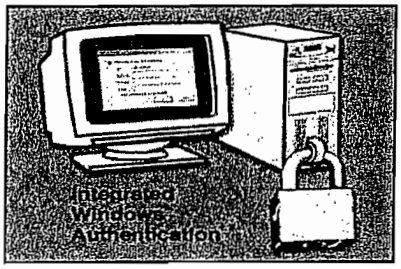

Strong Security for Applications

BENEFIT FROM UNRIVALED CONNECTIVITY

InTouch software can connect to virtually any industrial automation control device using hundreds of available I/O and OPC servers that are designed to connect to Wonderware products. In addition, the InTouch HMI can communicate via the SuiteLink protocol. Wonderware's SuiteLink communication protocol is written specifically for the high demands and reliability needs of fast-paced automation.

The InTouch HMI is capable of serving as an OPC client or an OPC server, and Wonderware servers provide access to InTouch application data through:

- Microsoft DDE communications
- Wonderware's SuiteLink protocol
- OPC technology

InTouch software offers connectivity to major hardware manufacturers including Rockwell, Siemens, Schneider and others. Third-party developers can also use the ArchestrA DAS (DA Server) Toolkit to create additional servers that incorporate one or all of the communication methods listed above.

invensys
Wonderware

TROUBLESHOOT EFFECTIVELY WITH ADVANCED ALARM CAPABILITIES

Knowledge of system alarms and the ability to acknowledge them in a timely manner can save hours of costly downtime and enable faster responses in critical situations. InTouch software includes several analysis tools and views into alarms, giving people the information they need to proactively correct situations before they worsen and to analyze events before, during and after an alarm situation. Troubleshooting tools include:

- **Distributed Alarm Display** – provides summary information of current alarms
- **Database View Control** – displays historical alarms that have been logged in the InTouch alarm logger database
- **Alarm Viewer Control** – an ActiveX control that provides both current summary and historical session alarm information

InTouch 9.5 software also contains several built-in and runtime configurable tools to enable users to quickly answer questions about specific alarm conditions. The tools assist plant employees in determining the nature of an alarm, its location and options for supporting fast analysis of alarm conditions coupled with immediate response capabilities.

Alarm Analysis Tools

- Built-In Pareto Charts
- Alarm Tree Navigation Windows
- Alarms Sortable at Runtime

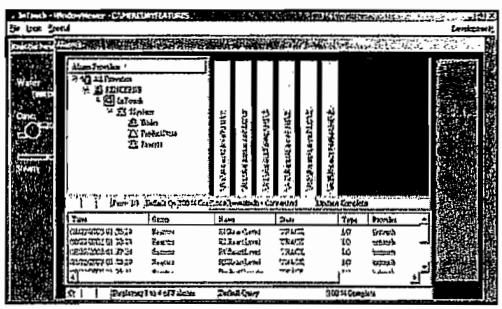

Easy-to-use Wizards and dialog boxes make alarm configuration simple to implement. An InTouch user gains complete control over the current alarms in a system and retrieval of historical alarm information.

Alarm Acknowledgement

InTouch software offers three alarm acknowledgement models:

- Traditional, condition-oriented alarms
- Event alarms, which are compatible with the OPC alarm model and require an acknowledgment for the most recent transition to an alarmed state
- Expanded Summary alarms, which support acknowledgment of each transition into and out of an alarmed state.

Alarm Flexibility

Users have a lot of flexibility when configuring and viewing alarms, including

- Alarm Inhibitor Tags that facilitate the enabling or disabling of alarms directly or indirectly
- Alarm suppression, which prohibits the display of alarm information on a specific view node and can be applied to single alarm classes, tags or groups
- System-wide disablement, which can block alarm activity at the source

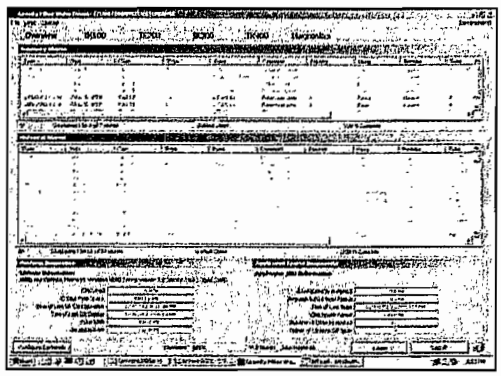

Powerful Distributed Alarm Subsystems

Alarm Toolkit

The Alarm Toolkit enables third parties, system integrators (SIs) and end-users to enhance InTouch systems by writing custom Alarm Providers and Alarm Consumers that work with their devices. Alarm Providers determine alarm conditions and publish the alarms to the InTouch Distributed Alarm Subsystem. Alarm Consumers are clients that receive information from the InTouch Distributed Alarm Subsystem. By using the toolkit, a hardware device interface can be constructed and integrated into an InTouch environment, allowing the hardware device to publish and manage alarms using the Distributed Alarm Subsystem.

SuiteLink Time-Stamping

InTouch 9.5 software offers alarming up to the millisecond – when the alarm is generated, not when the consumer receives the alarm.

Alarm Database

The InTouch Distributed Alarm Subsystem supports logging alarms and events to a Microsoft SQL Server 7.0, 2000 or MDSE database. This function gives users the power of a relational database regardless of the application size or project budget.

Support for AlarmSuite users is still available. However, to enable maximum flexibility, the InTouch 9.5 HMI also provides migration tools from existing AlarmSuite databases to the Wonderware Alarm Database.

Easy-to-Configure Hot Backup and Resynchronization

The Distributed Alarm System facilitates the configuration of a secondary backup Alarm Provider. Furthermore, if a primary Alarm Provider fails, the Distributed Alarm Subsystem is designed to seamlessly acquire alarm information from the backup system. Upon reconnection to the primary Alarm Provider, the Distributed Alarm Subsystem synchronizes the information before the primary system becomes live again.

LEVERAGE THE COMBINED POWER OF INTOUCH SOFTWARE AND THE INDUSTRIAL APPLICATION SERVER TO GAIN SIGNIFICANT COMPETITIVE ADVANTAGES

InTouch 9.5 software and the Industrial Application Server are both built upon the ArchestrA architecture, which enables reusable, distributed application development with centralized deployment and maintenance -- resulting in best-of-breed applications with the lowest lifecycle costs. Used together, the InTouch HMI and Industrial Application Server provide an information and automation application environment that supports the following activities:

- Development of advanced HMI templates that can be easily created, replicated and modified;
- A single tag namespace that enables the addition of client and server computers that seamlessly connect to and integrate with the application without requiring any additional engineering effort;
- Remote, centralized software deployment, change management and monitoring that eliminates the need to physically go to HMI computers to make changes; and
- An active (real-time), deterministic, plant-wide visualization system that can read and write values to a large number of PLCs and control devices.

The above features can give you, our valued InTouch customers, a significant competitive advantage!

SUPPORT VIRTUALLY ANY APPLICATION WITH EXTREMELY FLEXIBLE AND SCALABLE ARCHITECTURAL OPTIONS

InTouch software is used throughout the world to fulfill the requirements of many different environments. System solutions range from single-node visualization stations to multi-plant, multi-country applications and SCADA solutions that require visualization for remote, unmanned locations.

The InTouch HMI offers a variety of deployment methods to meet customer needs today while enabling a path for future growth – at all times preserving engineering effort and time.

Self-Contained, Standalone Visualization Stations

In a standalone architecture, the InTouch software is installed on a single computer node.

Each node is completely self-contained and not dependent on any other computer for operation. These systems can also be networked together.

Reliable and Effective Client/Server Architectures

The most popular system configuration for automation applications is a client/server architecture. In this scenario, the InTouch software is installed on the server and accessed by client computers. This method saves time and money on software maintenance and administration and provides additional security and redundancy functionality. The InTouch HMI can be deployed in the following client/server architectures:

Tag Server Configuration – A user designates one or multiple computers as tag servers that can:

- Store the tagname dictionary
- Perform historical event-logging
- Run QuickScripts
- Act as an alarm facility
- Connect to I/O data

InTouch applications running on client nodes or operator stations connect to the tag servers to display the information.

Terminal Services Architecture – In this architecture, the InTouch software is installed on a terminal server. Clients access InTouch application sessions running on the terminal server.

Terminal Services capabilities add:

- Centralized software deployment, maintenance and management
- Re-use of existing, older hardware
- High levels of security and redundancy
- Client support for multiple operating systems for standard InTouch applications
- Support for thin-client terminals, PDAs, Tablet PCs and browser visualization

Client operating system support includes:

- Microsoft Windows 2000, XP, 2003, CE, NT 3.51 and 4.0,,and Embedded Windows NT (NTE) operating systems
- Microsoft Windows for Workgroups 3.11, 95 and 98 operating systems
- Linux operating systems
- UNIX operating systems.

invensys Wonderware

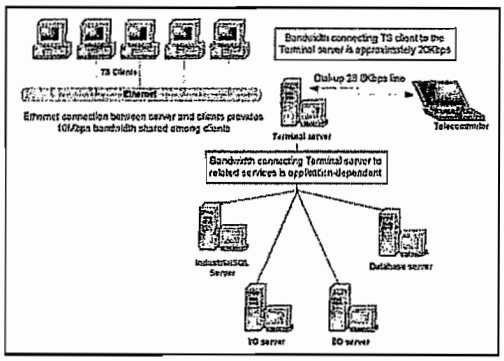

InTouch software running in a Terminal Services environment empowers industrial employees to reduce the time and effort they spend on software administration and management. At the same time, they can use the most up-to-date versions of the application software with a high degree of reliability and security.

Industrial Application Server Architecture – Wonderware's Industrial Application Server uses the InTouch View graphics engine for process visualization. The InTouch View graphics engine, combined with the Industrial Application Server, contains all of the functionality and features of the InTouch HMI, plus the productivity and cost savings of the Industrial Application Server. The Industrial Application Server greatly reduces the engineering effort and time required to maintain and deploy systems within one plant or across multiple plants.

REDUCTIONS IN SOFTWARE ADMINISTRATION AND MANAGEMENT

InTouch software includes several options for significantly reducing the time and effort required to administer and manage software applications.

Dynamic Network Application Development (NAD)

Dynamic NAD facilitates centralized maintenance of an InTouch application master copy using one network server. It offers:

- Strong redundancy – each client maintains a local copy of the master application
- Unparalleled reliability – the client continues working, even if master server is unavailable
- Seamless reconnections – from client to server after disruptions

NAD also facilitates changes to the master application through:

- Online modification changes – no need to shut down the running application
- Dynamic operator alerting – allows the operator to accept or delay configuration changes
- Fast downloads – only changes are downloaded

Using NAD enables the operator to have the most current application while allowing the running application to be updated at any time, without incurring downtime or loss of process visualization.

Industrial Application Server-Based Systems

The Industrial Application Server provides additional reduction of time for the deployment, maintenance and diagnostics of applications through the following features:

- **Online Maintenance and Expansion** – Upgrades can be done on portions of the application without restarting the entire system, enabling companies to lower maintenance costs and respond quickly to changes or problems.
- **Remote Deployment** – Upgrades can be done on portions of the application without restarting the entire system, enabling companies to lower maintenance costs and respond quickly to changes or problems. In addition, new plant equipment or workstations can be easily added without disrupting the rest of the line or plant.
- **Remote System-Wide Diagnostics** – Engineers save valuable engineering and troubleshooting time by centrally managing system-wide diagnostics. Any workstation on the network, local or remote, can be configured to view the entire status of the system.

Using the Industrial Application Server and NAD enables users to change every aspect of their application remotely.

UTILIZE EFFECTIVE DESIGN AND CONTROL FEATURES FOR DISTRIBUTED SYSTEMS

InTouch software offers several additional features to enable better application design and control for distributed environments. These include:

Remote Tag Referencing -- Developers can create an InTouch application without using any local tagnames. At runtime, client nodes connect to the tag server or the Industrial Application Server to retrieve information. Remote Tag Referencing enables companies to reduce costs and save time because users can create one template and re-use it several times throughout the application.

Distributed History -- Personnel can dynamically specify a different historical file or data source for each pen of a trend chart. This allows an operator to view both native InTouch history and IndustrialSQL Server history in the same trend. Distributed history trending enables swift analysis of historical information on one screen, saving time and improving the analysis of multiple variables.

Dynamic Resolution Conversion (DRC) -- Develop an application in one screen resolution and

run the application in another, without affecting the original application. Applications can also run at a user-defined resolution, instead of the display resolution, and take advantage of multiple monitors within an application without worrying about where the windows will appear. Dynamic Resolution Conversion enables users to save time by deploying applications anywhere, on displays of any size, without redesigning, copying or modifying the original application.

Distributed Time Zones – This feature provides services to both the distributed history and alarm systems, permitting value viewing in the local time. This is important because it eliminates confusion over what time events actually occurred.

BENEFIT FROM A CONSISTENT INTERFACE THROUGHOUT THE PLANT WITH ROBUST HARDWARE PRE-INTEGRATED WITH INTOUCH SOFTWARE

Wonderware Tablets and Touch Panel Computers

Wonderware's Industrial Tablets and Touch Panel Computers are pre-installed with fully functioning InTouch software. These are ideal for:

- Existing applications which can be re-used without modifications
- Increasing the mobility and versatility of new applications
- Replacing older hardware systems; and
- Serving as smart terminals for visualization and control in many automation scenarios previously serviced only by closed, proprietary (a.k.a., 'dumb') terminals

Wonderware Industrial Tablets and Touch Panel Computers work out-of-the-box, without additional configuration, and include access to Wonderware's extensive library of device integration tools, providing connectivity to a wide range of systems.

CREATE WORLDWIDE APPLICATIONS

Language Support

InTouch software is supported in English, German, French, Japanese and Simplified Chinese. Additional languages are also available around the world and supported by local distributors.

Runtime Language Switching

The languages displayed through the application can be dynamically changed at runtime based upon the requirements of the user. This capability enables global companies to provide information to the user in a preferred language, eliminating communication barriers and improving production and performance throughout the organization.

Time and Date Functions

Users can access UTC time, the current local time, the current time offset from the GMT zone, and Daylight Savings Time status for their applications, simplifying worldwide application management.

MAKE FULL USE OF THESE PRODUCTIVITY FEATURES

One Click, Real-Time Information Access Failover

Point-and-click failover to a separate computer node is highly valuable in cases of failure. In these situations, the InTouch software facilitates a switch from a primary to secondary communication computer, which is also connected to plant devices.

Fast Visualization from Multiple Devices

InTouch users can run a script function to modify the data source for ArchestrA Objects or InTouch tag references at runtime. This enables users to view information from different devices, objects, areas and plants based on particular conditions or directly via user interaction. Updating the real-time information in the window is very fast because only one line of script needs to execute.

Tablet PC Support

Wonderware's InTouch software has been enhanced to leverage Microsoft Tablet PC features such as Inking and Annotation.

Inking enables customers to write values into data links in their own handwriting. The InTouch application recognizes numbers and/or text in multiple languages and inputs them into the data field.

Annotation enables users to mark up a graphical display with pens and highlighters. After capturing and annotating a graphical screen, the user can instantly e-mail, print or save the screen capture to facilitate troubleshooting and explanations of the production process.

Deployment

The InTouch Fast Switch function enables application developers to switch back and forth between runtime and development environments at the click of a button. Developers can quickly determine how their applications will look and behave before deploying them into a production environment. In addition, the InTouch HMI can be started as a service, enabling automatic application start up and continuous operation through multiple log-on and log-off cycles.

Invensys Wonderware

Local Variables

InTouch 9.5 software supports the use of local variables in scripts to store temporary results and create complex calculations with intermediate scripting values.

"Designed for Windows XP" Certification

Designed for Microsoft® Windows®XP

InTouch software is the first HMI to qualify for Microsoft's prestigious "Designed for Windows XP" certification. This means that InTouch applications will install and run on the Windows XP platform.

INTEGRATE INTOUCH SOFTWARE WITH OTHER WONDERWARE COMPONENTS

InTouch 9.5 software can function as a universal client. It can be used as a front end for the Industrial Application Server, InTrack resource tracking software, InBatch production management software, the IndustrialSQL Server historian, InControl real-time control software and DT Analyst asset monitoring software. InTouch graphical windows can be viewed over a PDA, Tablet PC, thin-client terminals, standard computer displays and over a browser. In addition, client tools such as ActiveFactory analysis tools, SuiteVoyager Web analysis portal QI Analyst SPC/SQC software and SCADAlarm event-notification software collaborate with the InTouch HMI to provide additional information about the industrial process.

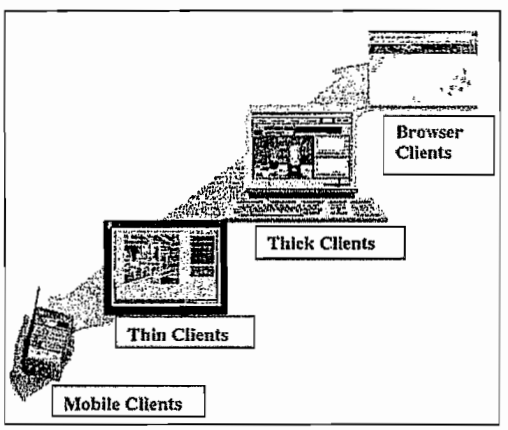

Agile Applications

ENJOY DEDICATED CUSTOMER SUPPORT

The Wonderware Customer Support Services Program makes it easy to maintain up-to-date Wonderware software and associated applications. To learn more about this valuable program, which often increases the value of industrial software applications, please contact your local Wonderware sales representative.

SYSTEM REQUIREMENTS

To run InTouch 9.5 software, we recommend the following hardware and software configurations:

HARDWARE

Minimum

- 1.2 GHz Pentium III or greater
- 512 MB of RAM, plus 5MB of additional RAM per 5K tags
- 2 GB Free Hard Disk Space

OPERATING SYSTEMS*

- Microsoft Windows 2003 Server, Standard and Enterprise Editions
- Microsoft Windows 2000 Professional, Server, and Advanced Server
- Microsoft Windows XP
- Microsoft Windows XP Tablet Edition

*with the latest service packs applied

Contact Wonderware or your local Distributor for information about software products for industrial automation.
Wonderware Corporation • 26561 Rancho Parkway South, Lake Forest, CA 92630 • Tel: (949) 727-3200 • Fax: (949) 727-3270
www.wonderware.com

© 2005 Invensys Systems, Inc. All rights reserved. No part of the material protected by this copyright may be reproduced or utilized in any form or by any means, electronic or mechanical, including photocopying, recording, broadcasting, or by any information storage and retrieval system, without permission in writing from Invensys Systems, Inc.

Invensys; Wonderware; ActiveFactory; ArchestrA; DT Analyst; FactorySuite; FactorySuite A²; InBatch; InControl; IndustrialSQL Server; InTouch; InTrack; QI Analyst; SCADAlarm; SuiteLink; SuiteVoyager; WindowMaker; WindowViewer; WonderWorld; "Every system in your plant, working in concert."; the Visualize, Analyze, Optimize symbols; and "Visualize, Analyze, Optimize" are trademarks or service marks of Invensys plc, its subsidiaries and affiliated companies. All other brands and product names may be the trademarks or service marks of their respective owners.

PN 15-0156

Rev. 9/05

Flange Mounted, Variable Depth, and Cable Operated Disconnect Switches
Class 9422

The Class 9422 Type TCF, TCN, TDF, TDN, TEF, TEN disconnect switches were designed for control panel installations. These switches include common switch profile 30–100 A, interchangeable fuse clips 30–60 A, ability to add fuse clip kits and cable mechanisms. They are compatible with 9422A and 9423, and are UL recognized and CSA certified.

Class 9422 Flange Mounted, Variable Depth Disconnect Switches

Disconnect Switch Size	Variable Depth Mtg. Range Min.–Max. (Inches)	Maximum Horsepower Ratings: AC Systems Volts (Motor Volts) 208 (200)	240 (230)	480 (460)	600 (575)	DC Using 2 Poles 250 V Maximum	Fuse Type	Fuse Clip Rating (Amperes) Non-Interchangeable Type For Class H, J, K or R Fuses Only: 250 V	600 V	Switch and Operating Mechanism Only—Does Not Include Handle Mechanism: Type	Price	Switch for Use With Cable Operators ONLY—Does Not Include Handle Mechanism or Cable Operator: Type	Price	Switch and Operating Mechanism and Handle Mechanism—Overpacked: Includes Type A1 Handle Mechanism: Type	Price	Includes Type A2 Handle Mechanism: Type	Price
30 A	6⅝"–18"	7.5	7.5	15	20	5	None	—	—	TCN30	$219.	TCN30C	$210.	ATCN301	$314.	ATCN302	$390.
							H, K, J, R	30	—	TCF30	248.	TCF30C	239.	ATCF301	342.	ATCF302	419.
								60	30	TCF33	266.	TCF33C	257.	ATCF331	362.	ATCF332	440.
60 A	6⅝"–18"	15	15	30	50	10	None	—	—	TDN60	257.	TDN60C	248.	ATDN601	351.	ATDN602	428.
							H, K, J, R	60	30	TDF60	305.	TDF60C	296.	ATDF601	399.	ATDF602	476.
								—	60	TDF63	323.	TDF63C	314.	ATDF631	419.	ATDF632	494.
100 A	6⅝"–18"	25	30	60	75	20	None	—	—	TEN10	380.	TEN10C	371.	ATEN101	476.	ATEN102	551.
							H, K, J, R	100	100	TEF10	522.	TEF10C	513.	ATEF101	617.	ATEF102	693.
200–400 A	See 9422 TF and TG on page 7-17																

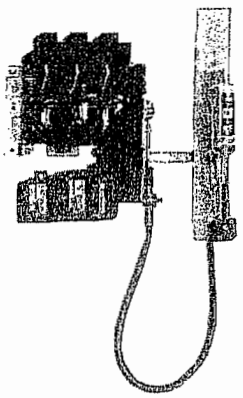

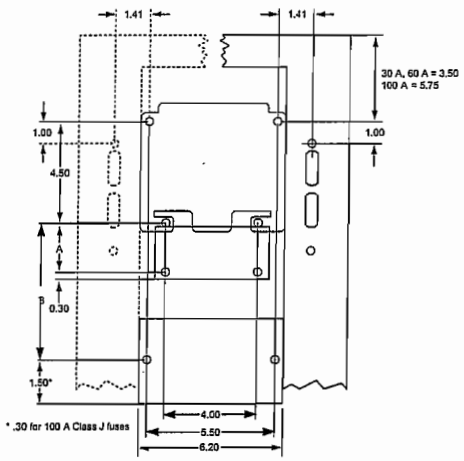

Class 9422 Replacement/Retrofit Fuse Clip Kits

Disconnect Switch Size	Switch Type	Fuse Type	Fuse Clip Rating (Amps): 250 V	600 V	Line and Load Fuse Clip Kit (includes load base and fuse pullers): Type	Price
30 A	TCF30 TCN30 TCF33	H, K, J, R	30		TC30	$28.50
			60	30	TC33	47.60
60 A	TDN60	H, K, J, R	60	30	TC33	47.60
				60	TD63	66.00

Class R Fuse Clip Kits

Disconnect Switch Size	Switch Type	Fuse Type	Fuse Clip Rating (AIR): 250 V	600 V	Rejection Feature—Class R Kit: Type▲	Price■
30 A	TCF30	R	30		RFK03	$16.30
	TCF33	R	60	30	RFK06	17.00
60 A	TDF60	R	60	30	RFK06	17.00
	TDF63	R		60	RFK06H	17.00
100 A	TEF10	R	100	100	RFK10	31.80

▲ No Class Number required.
■ Discount Schedule DE1, not CP1.

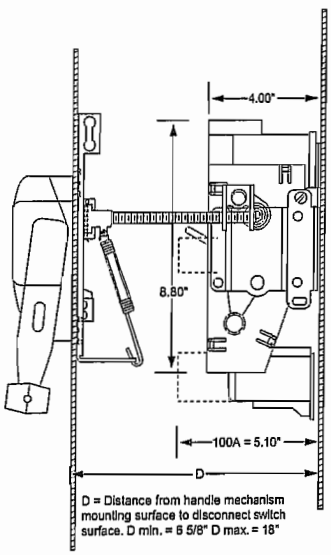

Class 9422 Disconnect Switch Cable Operators (must purchase switch separately)

Disconnect Switch Size	Switch Types	Cable Mechanisms♦: Cable Length	Type	Price	Cable Mechanisms with A1 Handle for Types 1, 3, 3R, 4 and 12: Type	Price
30 A, 60 A, 100 A	TCF, TCN TDF, TDN TEF, TEN	36"	CFT30	$182.	CFT31	$278.
		48"	CFT40	194.	...	...
		60"	CFT50	194.	CFT51	288.
		120"	CFT10	222.	CFT11	317.

♦ Must purchase handle mechanism separately (9422, A1, A2, A3 or A4).

Dimensions

Switch Type	Maximum Voltage	Fuse Type Class	Dimension A	Dimension B
30 A, 60 A	30 A, 250 V	H, K, R	1.625	
	30 A, 600 V	H, K, R	4.25	
	30 A, 600 V	J	1.625	
	60 A, 250 V	H, K, R	2.25	
	60 A, 600 V	H, K, R	4.75	
	60 A, 600 V	J	1.625	
100 A	100 A, 250 V	H, K, R		3.25
	100 A, 600 V	H, K, R		5.25
	100 A, 600 V	J		3.25

Class 9999 Electrical Interlocks

Disconnect Switch Size	Switch Types	Electrical Interlock:	Type	Price
30 A 60 A 100 A	TCF, TCN TDF, TDN TEF, TEN	SPDT★	TC10	$ 80.
		DPDT▼	TC20	159.
	BTCF, BTCN BTDF, BTDN BTEF, BTEN	SPDT★	TC11	80.
		DPDT▼	TC21	159.

★ 1 N.C. or 1 N.O. depending on wiring.
▼ 2 N.C., 2 N.O. or 1 N.O., 1 N.C. depending on wiring.

For additional information, reference Catalog #9420CT9701.

CP1		■DE1		Discount Schedule

© 2003 Schneider Electric
All Rights Reserved
9/8/03

Terminal Blocks
Power Distribution Blocks
Copper or Aluminum/Only Copper Wire

CLASS 9080	STANDARD			
		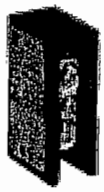		
Maximum Voltage Rating	600	600	600	600
Service Class	B & C	B & C	B & C	B & C
Amperage Rating-CU Wire	175 amp.	150 amp.	175 amp.	255 amp.
Amperage Rating-AL Wire	135 amp.	N/A	N/A	N/A
Wire Range Lugs suitable for use with 75° C Conductors.	MAIN (1) #14-2/0 AWG BRANCH (6) #14-#4 AWG	MAIN (1) #18-1/0 AWG BRANCH (1) #18-1/0 AWG	MAIN (1) #14-2/0 AWG BRANCH (4) #14-#4 AWG	MAIN (1) #6-250 MCM BRANCH (1) #6-250 MCM
Tightening Torque	MAIN #6-2/0 120 lbf-in (13.5 N-m) #8 40 lbf-in (4.5 N-m) #14-#10 35 lbf-in (4.0 N-m) BRANCH #14-#4 35 lbf-in (4.0 N-m)	MAIN #3-1/0 50 lbf-in (5.6 N-m) #6-#4 45 lbf-in (5.1 N-m) #8 40 lbf-in (4.5 N-m) #18-#10 35 lbf-in (4.0 N-m) BRANCH #3-1/0 50 lbf-in (5.6 N-m) #6-#4 45 lbf-in (5.1 N-m) #8 40 lbf-in (4.5 N-m) #18-#10 35 lbf-in (4.0 N-m)	MAIN #6-2/0 120 lbf-in (13.5 N-m) #8 40 lbf-in (4.5 N-m) #14-#10 35 lbf-in (4.0 N-m) BRANCH #14-#4 35 lbf-in (4.0 N-m)	MAIN #6-250 MCM 375 lbf-in (42.3 N-m) BRANCH #6-250 MCM 375 lbf-in (42.3 N-m)
Lug Material	Tin Plated High Conductive AL	Tin Plated High Conductive CU	Tin Plated High Conductive CU	Tin Plated High Conductive CU
Base Material	General Purpose Phenolic	General Purpose Phenolic	General Purpose Phenolic	General Purpose Phenolic
Temperature Rating	-40 to 302° F -40 to 150° C	-40 to 302° F -40 to 150° C	-40 to 302° F -40 to 150° C	-40 to 302° F -40 to 150° C
Listings	File E60616 Guide XCFR2		File LR70361	
Flammability Rating	UL94V-0	UL94V-0	UL94V-0	UL94V-0
ONE POLE BLOCKS				
Block Catalog Number	N/A	9080 LBC162101	9080 LBC162104	9080 LBC163101
Block Dimensions (D)x(H)x(W)	N/A	1.78x2.88x1.13 in. 45.2x73.2x 28.7 mm	1.78x2.88x1.13 in. 45.2x73.2x 28.7 mm	2.61x4.00x1.94 in. 66.3x101.6 x49.3 mm
TWO POLE BLOCKS				
Block Catalog Number	N/A	N/A	9080 LBC262104	N/A
Clear Plastic covers	N/A	N/A	9080 LB22	N/A
Block Dimensions (D)x(H)x(W)	N/A	N/A	1.78x2.88x1.94 in. 45.2x73.2x 49.3 mm	N/A
THREE POLE BLOCKS				
Block Catalog Number	9080 LBA362106	9080 LBC362101	9080 LBC362104	9080 LBC363101
Clear Plastic covers	N/A	9080 LB23	9080 LB23	9080 LB33
Block Dimensions (D)x(H)x(W)	2.10x2.90x5.38 in. 53.3x73.7x136.7 mm	1.78x2.88x2.75 in. 45.2x73.2x69.9 mm	1.78x2.88x2.75 in. 45.2x73.2x69.9 mm	2.61x4.00x5.00 in 66.3x101.6x127.0 mm
 DIN 3 (35 mm) Track Adapter	9080 FBDIN3	---	---	---

Terminal Blocks
Power Distribution Blocks
Dimensions

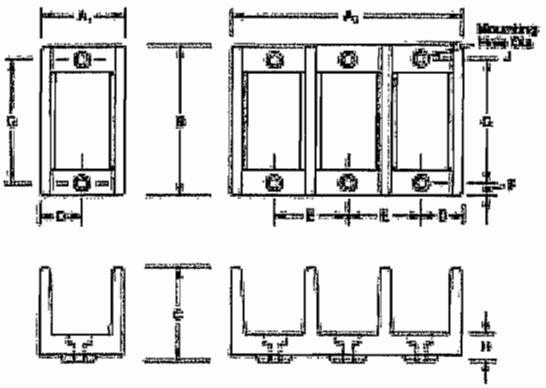

General Dimensions

1 Pole	2 Pole	3 Pole	A1	A2	A3	B	C	D	E	F	G	H	J
LBA161101 LBA161104	LBA261104	LBA161101 LBA361104	.76	1.40	2.03	2.29	1.62	.38	.64	.19	1.93	.32	.18
LBA162101 LBA162104 LBC162101	LBA262101 LBA262104	LBA362101 LBA362104 LBC362101	1.13	1.94	2.75	2.88	1.78	.56	.81	.31	2.25	.24	.205
LBA163101 LBA163104 LBA163106 LBA163206 LBC163101 LBC163106 LBC163206	LBA263101 LBA263104 LBA263106 LBA263206 LBC263106 LBC263206	LBA363101 LBA363104 LBA363106 LBA363206 LBC363101 LBC363106 LBC363206	1.94	3.47	5.00	4.00	2.61	.97	1.53	.31	3.38	.40	.203
LBA164101 LBA164108	LBA264108	LBA364101 LBA364108	2.28	4.16	6.04	4.75	2.92	1.14	1.88	.31	4.13	.51	.20
LBA165202 LBA1652021 LBA165106 LBA165112 LBA165212 LBC165208 LBC165212	LBA265202 LBA2652021 LBA265106 LBA265112 LBA265212	LBA365202 LBA3652021 LBA365106 LBA365112 LBA365212 LBC365208 LBC365212	3.17	5.88	8.54	5.50	3.12	1.58	2.69	.38	4.75	.50	.265

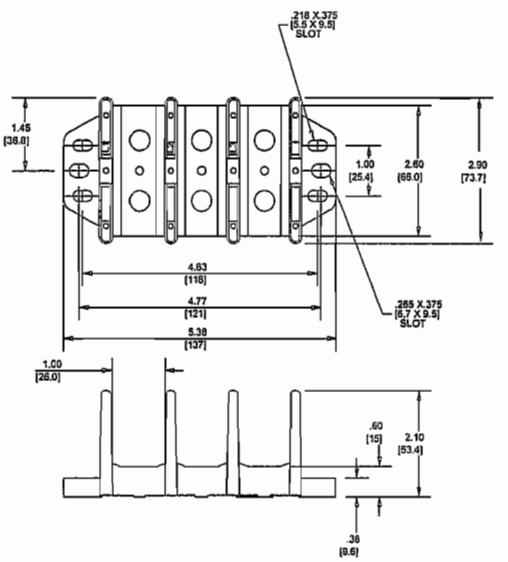

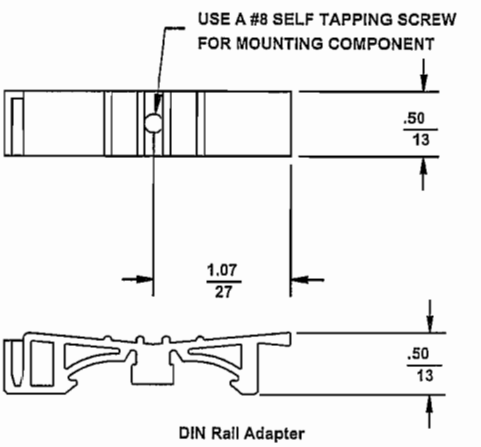

DIN Rail Adapter

Dimensions for LBA362106

Surge Protective Devices (SPD)

STV100K

STV25K

Surge protection devices are an effective and economical way to protect critical, microprocessor based equipment/ applications from the damaging effects of transients. Transient voltage spikes are generated externally due to lightning, utility grid switching and electrical accidents or internally due to copiers, generators and large motors. Sola surge suppression products quickly divert the high energy transients to levels that are safe for AC equipment.

Sola/Hevi-Duty's industrial surge suppression devices protect equipment with low clamping levels on all electrical paths. This not only prevents catastrophic failure but also extends the life of any electronic equipment.

These devices meet UL 1449, 2nd Edition standards and provide AIC ratings for safe distribution panel use. These surge protection devices come in a compact design allowing the user to install the product as close as possible to the sensitive load.

Surge suppression is one part of a total power quality solution. They can be used alone or in conjunction with other Sola/Hevi-Duty products to solve more complex power quality problems.

The STV25K DIN Rail Series

This series provides point-of-use protection, at the dedicated equipment level, against damaging transients. Ideal for installation in electronic control cabinets found in harsh industrial environments such as the factory floor or at remote locations. These devices provide 50,000 amps of surge protection, sinewave tracking, LED status indication and form "C" dry contacts. This DIN Rail series also provides protection on all electrical paths and comes with a standard ten year product warranty. The STV25K DIN Rail series surge suppressors are UL recognized to Standard 1449, 2nd Edition.

Related Products

- DIN Rail Power Supplies
- Industrial Control Transformers
- Line Reactors

The STV100K Hardwired Series

Sola/Hevi-Duty's STV100K series is a hardwired surge suppressor designed for installation at the service entrance, branch panel or a dedicated sensitive electronic load. These units feature all mode protection, LED and audible alarm status indication, sinewave tracking and form "C" dry contacts. The STV100K series also contains the highest levels of safety built into the product including thermal fusing and a fault current fusing level of 65 kAIC.

Related Products

- Power Conditioners
- UPS
- Drive Isolation Transformers
- K-Factor Transformers

The STV100K Series

Features

- 100,000 amp peak current rating provides all mode protection against severe transients.
- Low clamping levels for more effective protection
- 65 kAIC fault current fusing level provides safety and NEC conformance
- LED status and audible alarms
- Listed to UL 1449, 2nd Edition, UL 1283
- Compact, rugged metal NEMA 12 enclosure

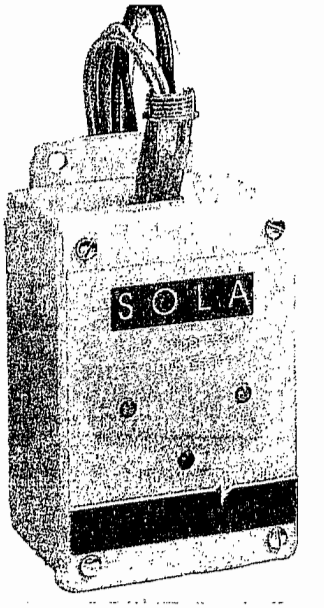

Applications

- Distribution panels (<1200 A)
- Branch, lighting and control panels
- Factory automation installations
- Dedicated industrial equipment

Selection Table

Catalog Number	Input Voltage	
STV100K-10S	120/240 V	Single Phase 3 wire + Ground
STV100K-10Y	208Y/120 V	Three Phase Wye 4 wire + Ground
STV100K-10N	120 V	Single Phase 2 wire + Ground
STV100K-24L	240 V	Single Phase 2 wire + Ground
STV100K-23Y	380Y/220 V	Three Phase Wye 4 wire + Ground
STV100K-27Y	480Y/277 V	Three Phase Wye 4 wire + Ground
STV100K-24D	240 V	Three Phase Δ 3 wire + Ground
STV100K-48D	480 V	Three Phase Δ 3 wire + Ground
STV100K-10D4	240/120 CT	Three Phase Δ 4 wire + Ground
STV100K-24D4	480/240 CT	Three Phase Δ 4 wire + Ground

Dimensions

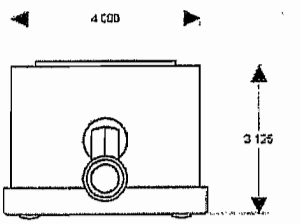

UNIT SHOWN IS A 3 PHASE WYE.

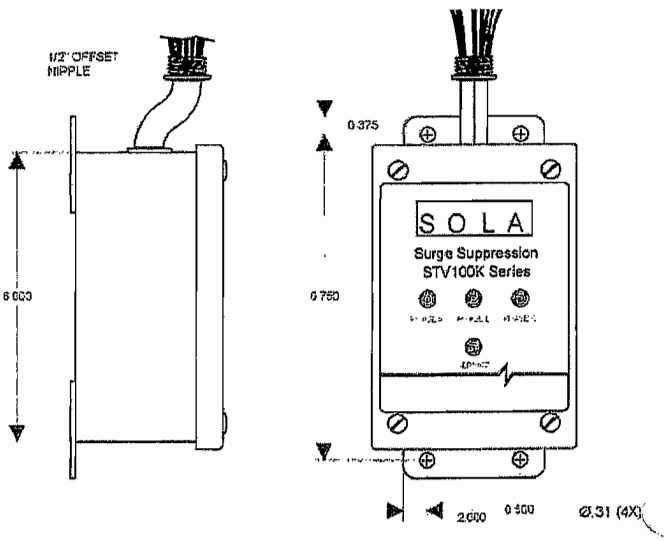

SOLA/ HEVI-DUTY

00 K Specifications

Description	Catalog Number									
	STV100K-10S	STV100K-10N	STV100K-24L	STV100K-10Y	STV100K-23Y	STV100K-27Y	STV100K-24D	STV100K-48D	STV100K-10D4	STV100K-24D4
Input VAC	120/240 V	120 V	240 V	208Y/120 V	380Y/220 V	480Y/277 V	240 V	480 V	120/240 CT	240/480 CT
	Single Phase 3 wire + Ground	Single Phase 2 wire + Ground		Three Phase Wye 4 wire + Ground			Three Phase Δ 3 wire + Ground		Three Phase Δ 4 wire + Ground	
Maximum Continuous Operating Voltage (MCOV)	125% of the nominal level for 120 V; 115% for all other input voltages									
Line Frequency	47-63 Hz									
Connection/ Mounting Type	Parallel/Flange									
Enclosure	Metal, NEMA 12 Enclosure									
Dimensions (H x W x D)	4 in x 6 in x 4 in									
Weight	8 lbs. Max									
Modes Of Protection	All Mode: L - N, L - L, L - G, N - G									
Safety Agency Approvals	UL 1449-2, cUL, UL 1283									
UL 1449 (2nd Edition) Suppressor Classification										
L - N	400 V	400 V	N/A	400 V	800 V	800 V	N/A	N/A	400 V	800 V
L - L	800 V	N/A	800 V	800 V	1500 V	1500 V	1500 V	1500 V	800 V	1500 V
L - G	400 V	400 V	800 V	400 V	800 V	800 V	1500 V	1500 V	400 V	800 V
N - G	400 V	400 V	N/A	400 V	800 V	800 V	N/A	N/A	400 V	800 V
A/C Rating	65 kAIC									
Status Indication	3-Green LEDs, 1 per phase, 1-Red LED, Form C Contacts, Audible Alarm									
Response Time	< 0.5 nsec									
Operating Temperature	-40°C to +60°C									
Operating Humidity	0% to 95% Non-condensing									
Fusing	Thermal and Fault Current									
Noise Attenuation	40 dB Max									
Peak Surge Current Capability										
Per Phase	100 kA	100 kA	100 kA	100 kA	100 kA	100 kA	100 kA	100 kA	100 kA	100 kA
Line to Neutral	50 kA	50 kA	N/A	50 kA	50 kA	50 kA	N/A	N/A	50 kA	50 kA
Line to Line	50 kA	N/A	50 kA	50 kA	50 kA	50 kA	50 kA	50 kA	50 kA	50 kA
Line to Ground	50 kA	50 kA	50 kA	50 kA	50 kA	50 kA	50 kA	50 kA	50 kA	50 kA
Neutral to Ground	50 kA	50 kA	N/A	50 kA	50 kA	50 kA	N/A	N/A	50 kA	50 kA
Warranty	10 years									

Introduction

The GV manual starter and protector provides manual isolation, manual motor control, and overcurrent protection in one compact unit. Square D offers three different products that make up the GV product family - GV2M, GV2P, and GV3M. These devices are UL Listed as Manual Motor Controllers.

The GV2M is the basic starter designed to control motors with full load currents up to 32 A. The GV2P is a high performance starter that offers a high withstand rating and visible trip indication. The GV3M starter is used on large motors with full load currents up to 63 A.

The GV manual starters and protectors are also UL Listed for group installation applications. See page 5 for maximum fuse or circuit breaker ratings when used in group installations.

In many European applications, the GV devices are used as circuit breakers because they meet the requirements of IEC 947-2 for circuit breakers. However, the GV starter does not meet North American circuit breaker standards such as UL or CSA.

Standard Features

The GV family offers such standard features as:

- Class 10, ambient compensated overload relay
- Single phase sensitivity
- Instantaneous magnetic trip
- Test trip mechanism
- Provision for padlocking in the OFF position
- Fingersafe terminals
- Captive +/- screws with screw driver guide
- North American and European terminal markings

© 1997 Square D All Rights Reserved

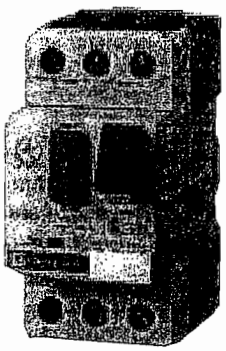

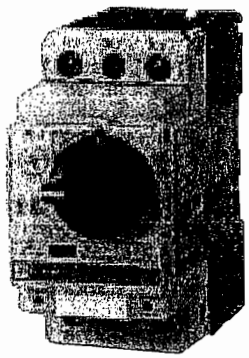

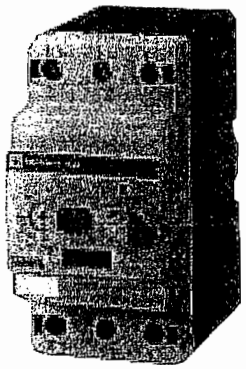

	GV2M 0.1 to 32 A Up to 20 hp @ 460 V 10 kA withstand @ 480 V Push Button Operator	GV2P 0.1 to 25 A Up to 15 hp @ 460 V 50 kA withstand @ 480 V Rotary Handle Operator Visible Trip Indication	GV3M 1 to 63 A Up to 40 hp @ 460 V 50 kA withstand @ 480 V Push Button Operator
Type of protection	Thermal-magnetic		
Mounting	• Clip-on mounting on 35 mm DIN rail. Unclips without using a tool. • Panel mount with metal adapter plate.	• Clip-on mounting on 35 mm DIN rail. Unclips without using a tool. • Panel mount directly.	• Clip-on mounting on 35 mm DIN rail. Unclips without using a tool. • Panel mount directly.
Connection	Use a cross-head screwdriver; captive screws. Same screwdriver used for connections on GV2 starters and their add-on blocks.		
Marking	By marker holder supplied with each unit.		
Tripping test	By means of a fine-blade screwdriver on front face of product.		
Signalling on front face • By the manual control device • By mechanical flag indicator	• Of ON or OFF state	• Of ON or OFF state • Of tripping by overload, short circuit, undervoltage or shunt trip. • Of tripping by short circuit.	• Of ON or OFF state
Padlocking	In the OFF position, with padlock, using the system incorporated in the manual control device.		
Tamper-proof current dial	—	Of the thermal current setting dial, by transparent cover which can be sealed.	—
Accessories	Mounted on the front of the product: - Either N/C or N/O, N/O + N/O or N/O + N/C instantaneous contact blocks which do not increase the width of the product. Side-mounting, accessories snap onto the starters, without the use of tools. • On the left-hand side, contact blocks which provide the following information: - N/O + N/O or N/O + N/C Start-Stop contacts, - N/O or N/C trip signalling contact, incorporating a mechanical flag indicator, and N/O or N/C Start-Stop contact, - C/O magnetic trip signalling contact, associated with a mechanical flag indicator, used for reset. • On the right-hand side: - shunt trip or undervoltage trip.		
	- Combination block for use with K contactor. - Bus bars and connectors	- For GV2P, visible isolation block which mounts on the incoming terminals of the device - Door interlock mechanism.	

© 1997 Square D All Rights Reserved

Thermal Setting (A)	Maximum Horsepower Ratings: Single Phase 115 V HP	Single Phase 230 V HP	Three Phase 200 V HP	Three Phase 230 V HP	Three Phase 460 V HP	Three Phase 575 V HP	GV2M Pushbutton Catalog Number	GV2P Rotary Handle Catalog Number	
0.11-0.16	–	–	–	–	–	–	GV2M01	GV2P01	See pages 6-11 for GV2 accessories and enclosures.
0.016-0.25	–	–	–	–	–	–	GV2M02	GV2P02	
0.25-0.40	–	–	–	–	–	–	GV2M03	GV2P03	
0.40-0.63	–	–	–	–	–	–	GV2M04	GV2P04	
0.63-1	–	–	–	–	1/2	1/2	GV2M05	GV2P05	
1-1.6	–	1/10	–	–	3/4	1	GV2M06	GV2P06	
1.6-2.5	–	1/6	1/2	1/2	1	1-1/2	GV2M07	GV2P07	
2.5-4	1/8	1/3	3/4	1	2	3	GV2M08	GV2P08	
4-6.3	1/4	1/2	1-1/2	1-1/2	3	5	GV2M10	GV2P10	
6-10	1/2	1-1/2	2	3	5	7-1/2	GV2M14	GV2P14	
9-14	3/4	2	3	3	10	10	GV2M16	GV2P16	
13-18	1	3	5	5	10	15	GV2M20	GV2P20	
17-23	1-1/2	3	5	7-1/2	15	20	GV2M21	GV2P21	
20-25	2	3	5	7-1/2	15	20	GV2M22	GV2P22	
24-32	2	5	10	10	20	30	GV2M32		
1-1.6	–	1/10	–	–	3/4	1	GV3M06		See page 28 for GV3 accessories and enclosures.
1.6-2.5	–	1/16	1/2	1/2	1	1-1/2	GV3M07		
2.5-4	1/8	1/3	3/4	1	2	3	GV3M08		
4-6	1/4	1/2	1-1/2	1-1/2	3	–	GV3M10		
6-10	1/2	1-1/2	2	3	5	7-1/2	GV3M14		
10-16	1	2	3	5	10	10	GV3M20		
16-25	2	3	5	7-1/2	15	20	GV3M25		
25-40	3	7-1/2	10	10	30	30	GV3M40		
40-63	5	10	20	20	40	60	GV3M63		

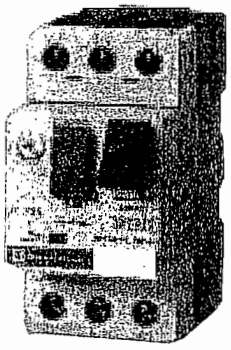

GV2M

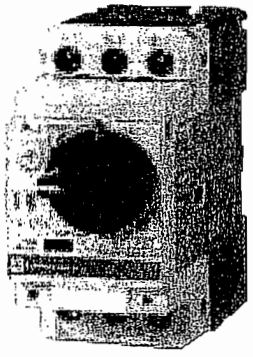

GV2P

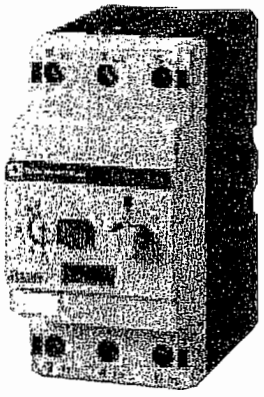

GV3M

File E164864
CCN NLRV

File LR 81630
Class 3211 05

© 1997 Square D All Rights Reserved

Group Motor Installations

The GV2/GV3 devices are UL 508 listed, Manual Motor Controllers for use in group installations. If each motor in the grouping is controlled by a GV2/GV3 device, only one branch circuit protective device (circuit breaker or fusing) is necessary for the entire group per NEC 430-53c, provided that:

- The controller is UL listed for group installation
- The overload device is UL listed for group installation

Refer to the table below to determine the maximum RMS short circuit current capacity for the GV2/GV3. The GV1L3 current limiter module may be used to increase the maximum RMS short circuit values for the GV2M14-M22.

The Maximum RMS short circuit current rating for the complete group installation is determined by the individual GV device with the lowest RMS short circuit value.

For example: a group installation uses a GV2M08, GV2M16 and GV2M22. The respective maximum RMS short circuit values @ 480 V, without the use of a GV1L3 current limiter module, are: 50 kA, 25 kA and 10 kA. Therefore, the group installation has a maximum RMS short circuit value of 10 kA.

Maximum RMS Short Circuit Current

Current Range	GV2	Max RMS, kA		w/GV11L3 Current Limiter		GV2	Max RMS, kA		GV3	Max RMS, kA	
		480 V	600 V	480 V	600 V		480 V	600 V		480 V	600 V
0.1-0.16	M01	50	30			P01	50	30			
0.16-0.25	M02	50	30			P02	50	30			
0.25-0.40	M03	50	30			P03	50	30			
0.40-0.63	M04	50	30			P04	50	30			
0.63-1.0	M05	50	30			P05	50	30			
1.0-1.6	M06	50	30			P06	50	30	M06	50	23
1.6-2.5	M07	50	30			P07	50	30	M07	50	23
2.5-4.0	M08	50	30			P08	50	30	M08	50	23
4.0-6.3	M10	50	30			P10	50	30	M10	50	23
6-10	M14	30	30	50		P14	50	30	M14	50	23
9-14	M16	25	10	50	30	P16	50	18			
10-16									M20	50	23
13-18	M20	25	10	50	30	P20	50	18			
16-25									M25	50	23
17-23	M21	10	10	50	30	P21	50	18			
20-25	M22	10	10	50	30	P22	50	18			
24-32	M32	10	10	50	30						
25-40									M40	50	10
40-63									M63	50	10

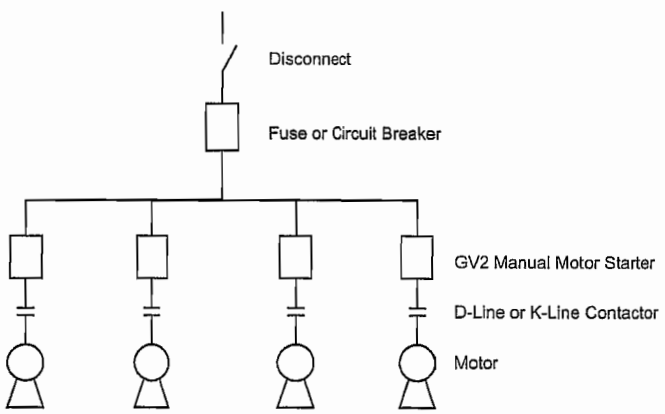

Typical Group Motor Installation

© 1997 Square D All Rights Reserved

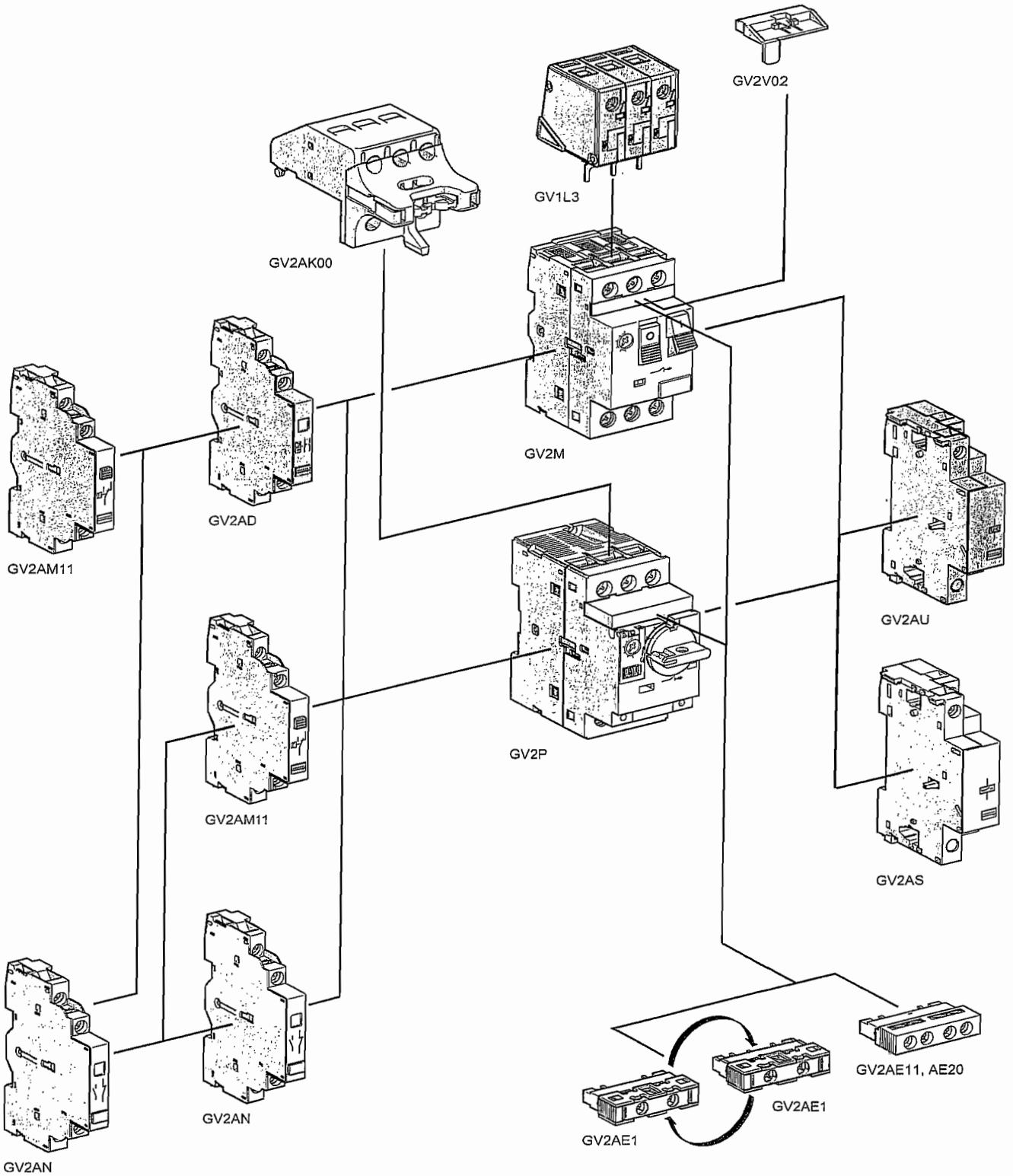

© 1997 Square D All Rights Reserved

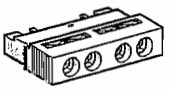

GV2AE11

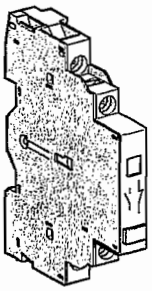

GV2AN11

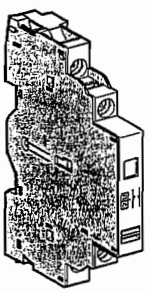

GV2AD1010

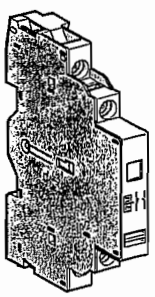

GV2AU

Auxiliary contact blocks

Description	Mounting Location	Max. No. of blocks	Contact Types	Sold in lots of	Catalog Number
Instantaneous auxiliary contacts	Front (3)	1	N/O OR N/C (1)	10	**GV2AE1**
			N/O + N/C	10	**GV2AE11**
			N/O + N/O	10	**GV2AE20**
	Left Hand Side	2	N/O + N/C	1	**GV2AN11**
			N/O + N/O	1	**GV2AN20**
Fault signalling contact + instantaneous auxiliary contact	Left Hand Side (2)	1	N/O (fault) + N/O	1	**GV2AD1010**
			N/O (fault) + N/C	1	**GV2AD1001**
			N/C (fault) + N/O	1	**GV2AD0110**
			N/C (fault) + N/C	1	**GV2AD0101**
Short circuit signalling contact	Left Hand Side	1	SPDT	1	**GV2AM11**

Voltage trips

Description	Mounting Location	Max. No. of blocks	Voltage		Catalog Number
Undervoltage trip	Right Hand Side	1	110-115 V	50 Hz	**GV2AU115**
				60 Hz	**GV2AU116**
			220-240 V	50 Hz	**GV2AU225**
				60 Hz	**GV2AU226**
			380-400 V	50 Hz	**GV2AU385**
				60 Hz	**GV2AU386**
			415-440 V	50 Hz	**GV2AU415**
			440 V	60 Hz	**GV2AU385**
			500 V	50 Hz	**GV2AU505**
			600 V	60 Hz	**GV2AU505**
Shunt trip	Right Side Side	1	110-115 V	50 Hz	**GV2AS115**
				60 Hz	**GV2AS116**
			220-240 V	50 Hz	**GV2AS225**
				60 Hz	**GV2AS226**
			380-400 V	50 Hz	**GV2AS385**
				60 Hz	**GV2AS386**
			415-440 V	50 Hz	**GV2AS415**
			440 V	60 Hz	**GV2AS385**
			500 V	50 Hz	**GV2AS505**
			600 V	60 Hz	**GV2AS606**

Add-on contact blocks

Description	Mounting Location	Max. No. of blocks	Sold in lots of	Catalog Number
Visible isolation block, 3-pole on incoming side of GV2P	Front (3)	1	1	**GV2AK00**
100 kA limiter	Top	1	1	**GV1L3**

Sealing kit

For GV2M	Front	–	10	**GV2V02**

(1) Choice of N/C or N/O contact operation depending on which way the reversible block is mounted.
(2) The **GV2AD** is always mounted next to the manual starter.
(3) Can mount either a **GV2AE** contact block or a **GV2AK00** visible isolation block on **GV2P**.

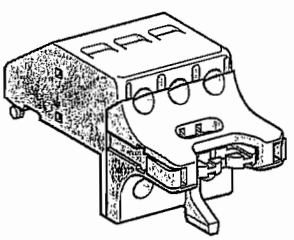

GV2AK00

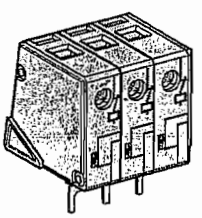

GV1L3

© 1997 Square D All Rights Reserved

Telemecanique

Mounting Dimensions

Dimensions Inches / MM

GV2M

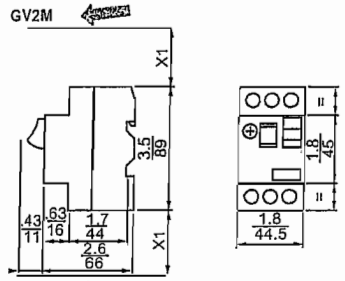

X1 Electrical clearance = 1.8 in/40 mm for Ue ≤ 690 V

GV2AD, AM, AN, AU, AS
Block GV2AD, AM, AN
Block GV2AU, AS

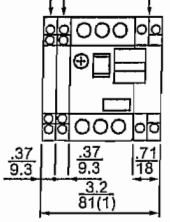

GV2AE

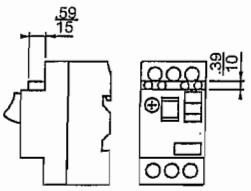

GV2P

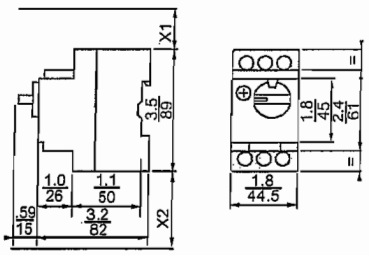

GV2AD, AM, AN, AU, AS,
Block GV2AD, AM, AN
Block GV2AU, AS

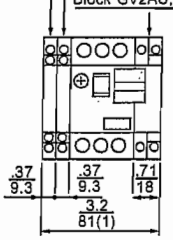

GV2AK00

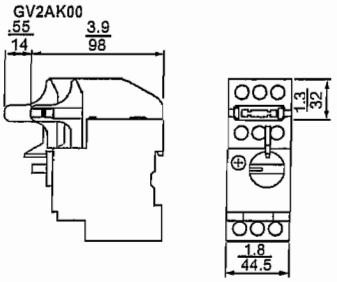

X2 = 1.8 in/40 mm
X1 Electrical clearance = 1.8 in/40 mm for Ue ≤ 415 V, or 3.2 in/ 80 mm for Ue = 440 V, or 4.7 in/120 mm for Ue = 500 and 690 V

Mounting of GV2M
On 1.4 in/ 35 mm (rail)
C = 78.5 on AM1DP200 (35 x 7.5)
C = 86 on AM1DE200, ED200 (35 x 15)

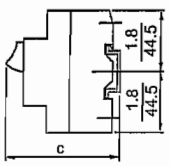

On panel with adaptor plate GV2AF02

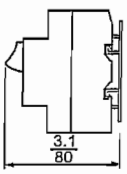

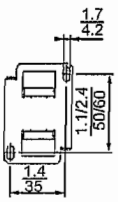

On pre-slotted mounting plate AM1PA AF1EA4

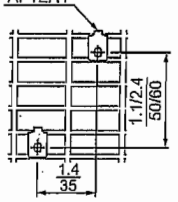

On mounting rail DZ5MB201

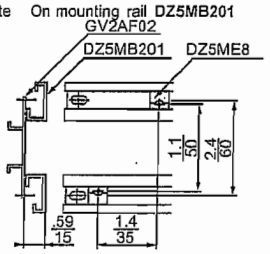

Mounting of GV2P
On 1.4 in/ 35 mm (rail)
C = 98.5 on AM1DP200 (35 x 7.5)
C = 106 on AM1DE200, ED200 (35 x 15)

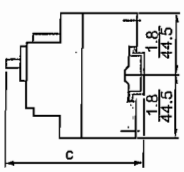

On panel

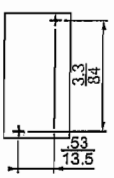

On pre-slotted mounting plate AM1PA AF1EA4

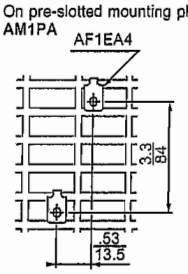

Adaptor plate GK2AF01

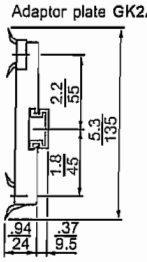

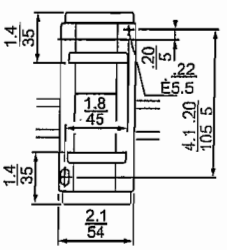

GV2AF01
GV2M + K contactor combination

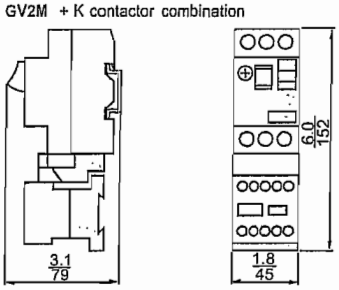

GV2M + GV1L3 (current limiter)

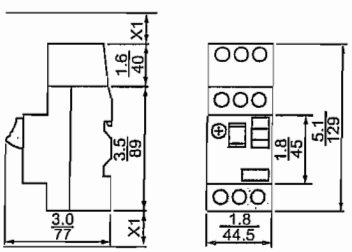

7.5 mm height compensation plate
GV1F03

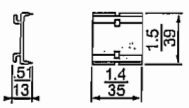

X1 = .40 in/ 10 mm for Ue = 230 V or 1.2 in/30 mm for 230 V < Ue ≤ 690 V

© 1997 Square D All Rights Reserved

GV2M

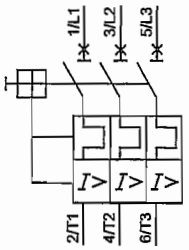

GV2P

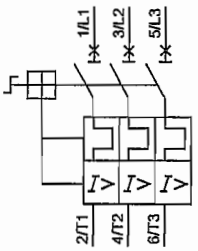

Current limiter GV1L3

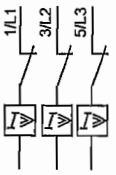

Front mounting add-on contact blocks
Instantaneous auxiliary contacts

GV2AE1

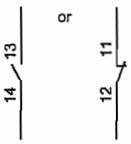

GV2AE11

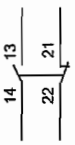

GV2AE20

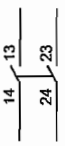

Side mounting add-on contact blocks
Instantaneous auxiliary contacts and fault signalling contacts

GV2AD0110

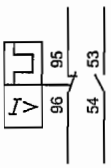

GV2AD0101

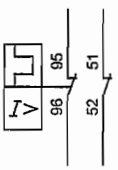

GV2AD1010

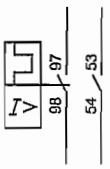

GV2AD1001

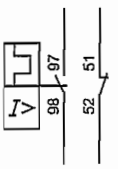

Instantaneous auxiliary contacts

GV2AN11

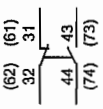

GV2AN20

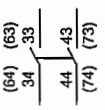

Short-circuit signalling contacts

GV2AM11

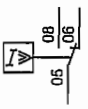

Voltage trips

GV2AU

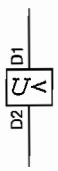

GV2AS

Use of fault signalling contact and
short-circuit signalling contact

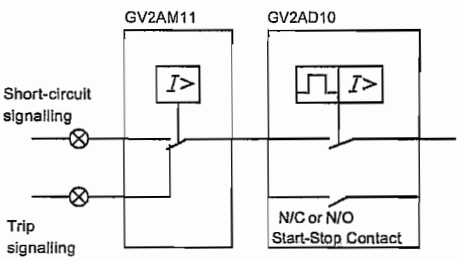

© 1997 Square D All Rights Reserved

Environment

Type	GV2M	GV2P
Conforming to standards	IEC 947-1, 947-2, 947-4-1, EN 60204, BS 4752, BS 4941, UL 508, CSA C22.2 No. 14, NF C 63-650, NF C63-120, 79-130, VDE 0113, 0660.	
Product approvals	DEMKO, NEMKO, SEMKO, CSA. UL, BV, GL, LROS, DNV, PTB	CSA, UL, PTB
UL File Number	File E164864, CCN NLRV	
CSA File Number	File LR 81630, Class 3211 05	
Protective treatment	Pending: CEBEC, ECU, KEMA-KEUR. MEEI, ÖVE "TH"	Pending : ECU, ÖVE "TH"
Degree of protection conforming to IEC 529	In enclosure **GV2M01**: IP 41 – In enclosure **GV2M02**: IP 55	–
Shock resistance conforming to IEC 68-2-27	30 g	30 g
Vibration resistance conforming to IEC 68-2-6	5 g (5 to 150 Hz)	5 g (5 to 150 Hz)
Ambient air temperature - storage	-40 to +176 °F(-40 to + 80 °C)	-40 to +176 °F(-40 to + 80 °C)
- operation	-4 to +140 °F(-20 to + 60 °C)	-4 to +140 °F(-20 to + 60 °C)
Temperature compensation	-4 to +140 °F(-20 to + 60 °C)	-4 to +140 °F(-20 to + 60 °C)
Flame resistance conforming to IEC 695-2-1	1760 °F(960 °C)	1760 °F(960 °C)
Maximum operating altitude	6562 ft(2000 m)	6562 ft(2000 m)
Operating positions in relation to normal vertical mounting position		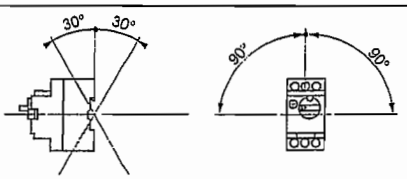
Wiring Number of conductors and cross sectional area (c.s.a.)	Max / Min	Max / Min
Solid cable	2-#8 AWG(2-6 mm²) / 2-#16 AWG(2-1 mm²)	2-#8 AWG(2-6 mm²) / 2-#16 AWG(2-1 mm²)
Flexible cable without cable end	2-#8 AWG(2-6 mm²) / 2-#14 AWG(2-1.5 mm²)	2-#8 AWG(2-6 mm²) / 2-#14 AWG(2-1.5 mm²)
Flexible cable with cable end	2-#10 AWG(2-4 mm²) / 2-#16 AWG(2-1 mm²)	2-#10 AWG(2-4 mm²) / 2-#16 AWG(2-1 mm²)
Suitable for isolation conforming to IEC 947-1 § 7-1-6	Yes	Yes
Tightening torque	15 lb-in(1.7 N•m)	15 lb-in(1.7 N•m)
Resistance to mechanical impact	0.5 J	0.5 J
	Enclosed : 6	–
Sensitivity to phase failure	Yes, conforming to IEC 947-4-1, paragraph 7-2-1-5-2	

© 1997 Square D All Rights Reserved

Characteristics

Type		GV2M	GV2P
Utilization category conforming to IEC 947-2		A	A
conforming to IEC 947-4-1		AC-3	AC-3
Rated operational voltage (Ue) conforming to IEC 947-2	V	690	690
Rated insulation voltage (Ui) conforming to IEC 947-2	V	690	690
conforming to CSA C22.2 No. 14 and UL 508	V	600	600
Rated operational frequency conforming to IEC 947-2	Hz	50/60	50/60
Rated impulse withstand voltage (U imp) conforming to IEC 947-2	kV	6	6
Total power dissipated per pole	W	2.5	2.5
Mechanical life (ops : closing, opening)	ops	100 000	100 000
Electrical life for AC-3 duty	ops	100 000	100 000
Duty class (maximum operating rate)	ops/h	25	25
Rated duty conforming to IEC 947-4-1		Continuous duty	Continuous duty

© 1997 Square D All Rights Reserved

Type		Instantaneous auxiliary contacts GV2AN, GV2AD							Fault signalling contacts GV2AD, GV2 AM11			
Rated insulation voltage (Ui) (associated insulation coordination) conforming to IEC 947-1	V	690							690			
to CSA C22.2 No. 14 and UL 508	V	600							300			
Conventional rated thermal current (Ith) conforming to IEC 947-5-1	A	6							2.5			
to CSA C22.2 No. 14 and UL 508	A	5							1			
Mechanical life (ops: closing-opening)	ops	100 000							1000			
Operational power and current conforming to IEC 947-5-1 a.c. operation		AC-15/100 000 ops							AC-14/1000 ops			
Rated operational voltage (Ue)	V	48	110 127	230 240	380 415	440	500	690	24	48	110 127	230 240
Operational power, normal conditions	VA	300	500	720	850	650	500	400	36	48	72	72
Occasional breaking and making capacities, abnormal conditions	VA	3000	7000	13 000	15 000	13 000	12 000	9000	220	300	450	450
Rated operational current (Ie)	A	6	4.5	3.3	2.2	1.5	1	0.6	1.5	1	0.5	0.3
Operational power and current conforming to IEC 947-5-1 d.c. operation		DC-13/100 000 ops							DC-13/1000 ops			
Rated operational voltage (Ue)	V	24	48	60	110	240 (1)	–	–	24	48	60	–
Operational power, normal conditions	W	140	240	180	140	120	–	–	24	15	9	–
Occasional breaking and making capacities, abnormal conditions	W	240	360	240	210	180	–	–	100	50	50	–
Rated operational current (Ie)	A	6	5	3	1.3	0.5	–	–	1	0.3	0.15	–
Minimum operational conditions d.c. operation	V	17										
	mA	5										
Short circuit protection		By **GB2CB●●** circuit breaker (rating according to operational current for Ue ≤ 415 V) or by gl fuse 10 A max										
Wiring Number of conductors and cross sectional area (c.s.a.)		Min							Max			
Solid cable		1-#16 to #12 AWG(1-2.5 mm²)							2-#16 to #12 AWG(1-2.5 mm²)			
Flexible cable without cable end		1-#18 to #12 AWG(0.75-2.5 mm²)							2-#18 to #12 AWG(0.75-2.5 mm²)			
Flexible cable with cable end		1-#18 to #14 AWG(0.75-1.5 mm²)							2-#18 to #14 AWG(0.75-1.5 mm²)			
Tightening torque	N•m/lb-in	12 lb-in(1.4 N•m) max										

(1) Add an RC circuit type LA4 D to the load terminals, see Square D Digest.

© 1997 Square D All Rights Reserved

Thermal-magnetic tripping curves for GV2M and GV2P

Average operating time at 20°C according to multiples of the setting current

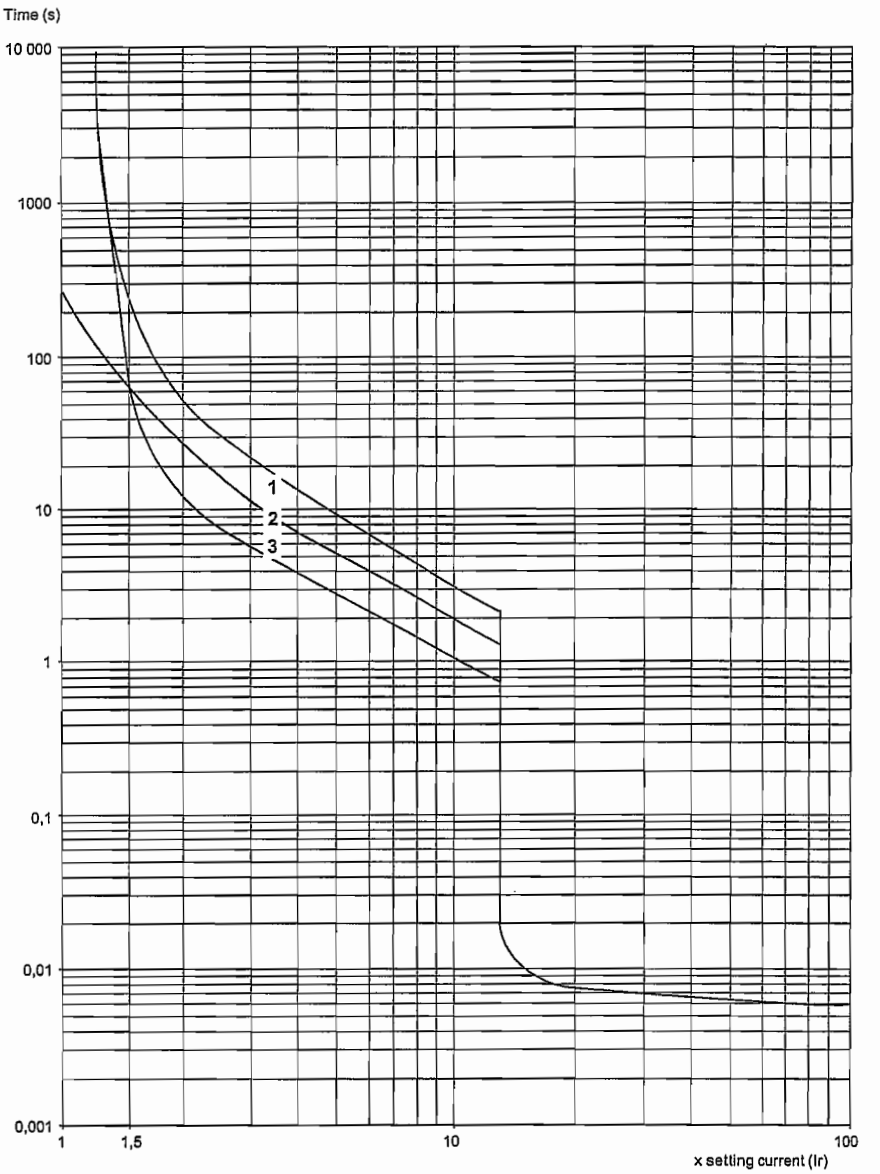

1 3 poles from cold state
2 2 poles from cold state
3 3 poles from hot state

© 1997 Square D All Rights Reserved

Current limitation on short circuit

For GV2M and GV2P
Three-phase 400/415 V

Dynamic stress
I peak = f (prospective Isc) at 1.05 Ue = 435 V

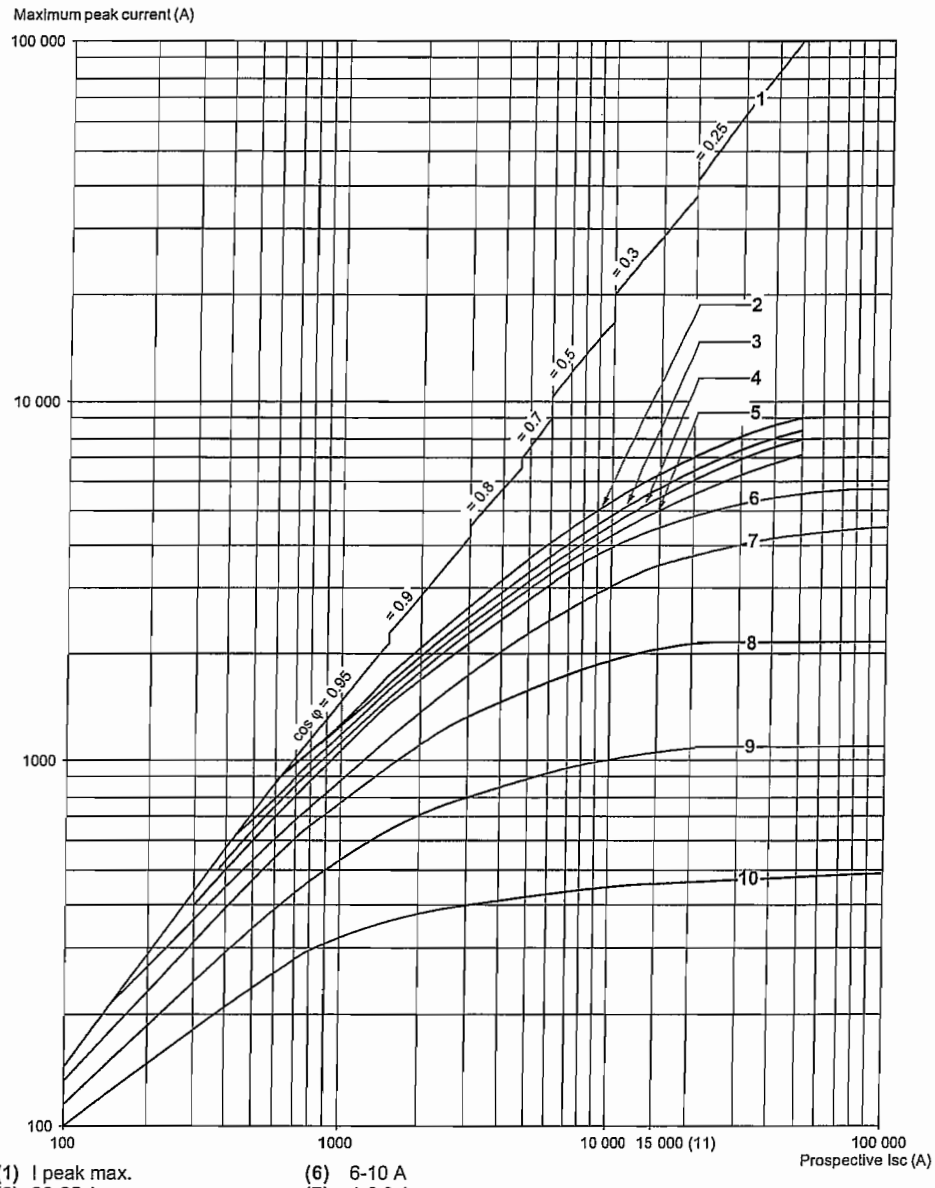

(1) I peak max.
(2) 20-25 A
(3) 17-23 A
(4) 13-18 A
(5) 9-14 A
(6) 6-10 A
(7) 4-6.3 A
(8) 2.5-4 A
(9) 1.6-2.5 A
(10) 1-1.6 A
(11) Limit of rated ultimate breaking capacity on short circuit of GV2M (14, 18, 23 and 25 Amp ratings)

© 1997 Square D All Rights Reserved

Thermal limit on short circuit for GV2M

Thermal limit in kA² s in the magnetic operating zone

Sum of I²dt = f (prospective Isc) at 1.05 Ue = 435 V

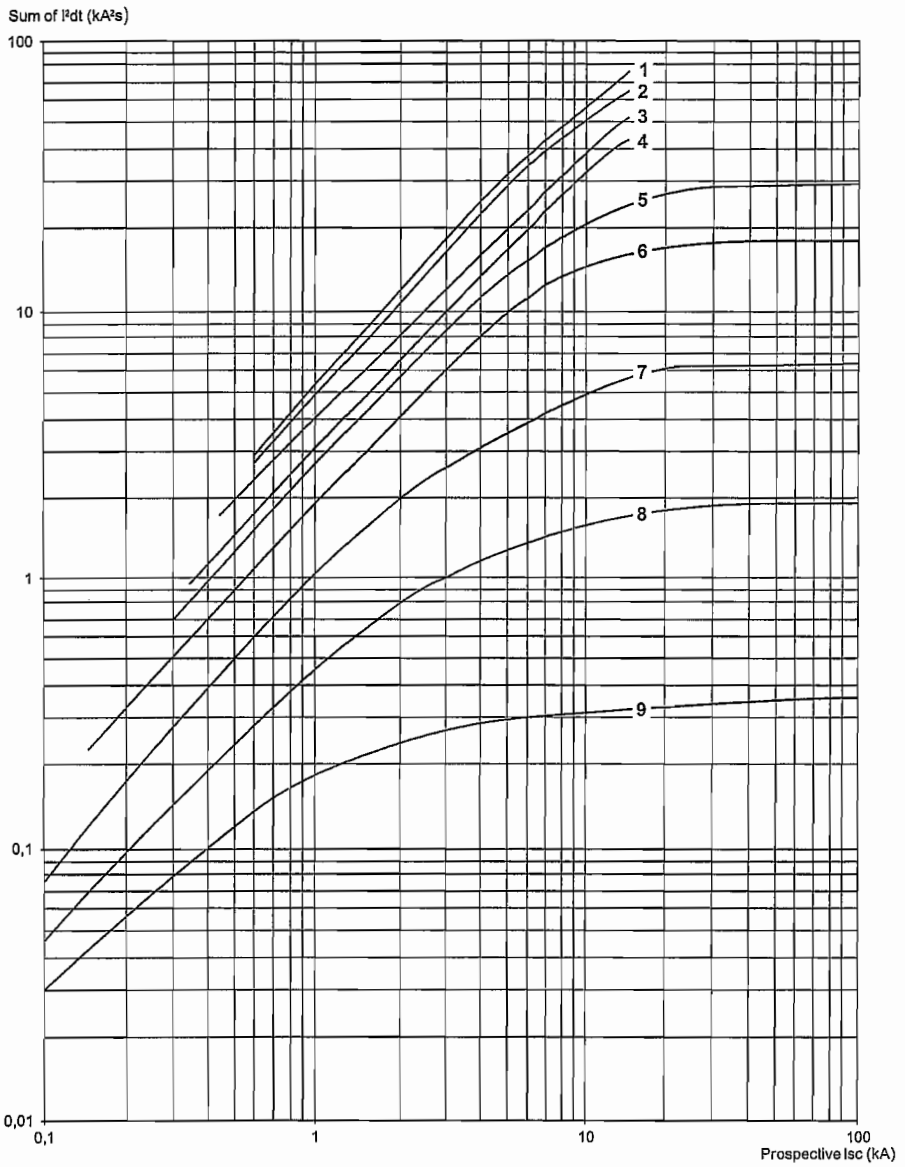

1 20-25 A
2 17-23 A
3 13-18 A
4 9-14 A
5 6-10 A
6 4-6,3 A
7 2.5-4 A
8 1.6-2.5 A
9 1-1.6 A

© 1997 Square D All Rights Reserved

The D-line contactors and overload relays are the largest selling line of contactors and starters in the world. They offer high reliability with long mechanical and electrical life and the most complete line of accessories in the industry.

Contactor Ratings

- D-line contactors and overload relays are available in 11 contactor ratings for the USA market for inductive motor applications up to 150 full-load amps and resistive loads up to 200 A. They offer motor control and overload protection for motors rated up to 100 HP at 480 Vac or 125 HP at 600 Vac.
- 3-pole and 4-pole contactor versions available.
- Most contactors include built-in auxiliary contacts.
- All screw connections have IP20 rated touch-safe terminals with both North American and International terminal markings.
- D-line contactors can be panel mounted with screws or DIN rail mounted.
- Available in 3-pole contactor versions with built-in auxiliary contact for holding circuit or 4-pole contactor versions.

Easily Installed Accessories

- Auxiliary contact blocks with serrated wiping action
- Front mount dust tight auxiliary contact blocks
- Pneumatic time delay blocks
- Transient voltage surge suppressors
- Interface modules and electronic timers
- Mechanical latching blocks

Control Circuit Flexibility

The D-line contactors are available with ac or dc operating coils. Several devices utilize a low-consumption dc coil with built-in transient suppression for operation with a low-level dc signal from a computer or PLC without need for an interposing relay.

Overload Relays

Class 10 or Class 20 bimetallic overload relays are available up to 140 A. They are bimetallic ambient compensated and are available with or without single-phase sensitivity for phase unbalance and phase loss protection. New solid state overload relays are available for 90 to 150 A applications. Both bimetallic and solid-state overload relays include the following features:

- Isolated N/C trip contact and N/O alarm contacts.
- Manual or Automatic reset function.
- Tamper-resistant window for FLA settings.
- Test trip button.

© 2001 Schneider Electric All Rights Reserved

Environment

Type				LC1D09	LC1D12	LC1D18	LC1D25
Rated insulation voltage (Vi)	UL/CSA		V	690	690	690	690
	To IEC 60947-4-1, overvoltage category III, degree of pollution: 3		V	1000	1000	1000	1000
	Conforming to UL, CSA		V	600	600	600	600
Rated impulse withstand voltage (Vimp)	Conforming to IEC 60947		kV	6	6	6	6
Conforming to standards	CE Meets the essential requirements of the LV & EMC directives			IEC 60947-1, 60947-4-1, NFC 63-110, VDE 0660, BS 5424, JEM 1038., EN 60947-1, EN 60947-4-1.			
Approvals	UL E164862 CCN NLDX	CSA LR43364 Class 3211 04		ASE, UL, CSA, DEMKO, NEMKO, SEMKO, FI, Conforming to SNCF, Sichere Trennung recommendations			
Degree of protection ◆	Conforming to VDE 0106	Power connections		Protection against direct finger contact IP 2X			
		Coil connections		Protection against direct finger contact IP 2X			
Protective treatment	Conforming to IEC 60068			"TH"			
Ambient air temperature around the device	Storage			- 60 to + 80°C (-76 to +176°F)			
	Operation at 80 to 110% nominal control voltage			- 5 to + 60°C (-23 to +140°F)			
	Permissible at nominal control voltage			- 40 to + 70°C (-40 to +158°F)			
Maximum operating altitude	Without derating			3000m (8900 ft.)			
Operating positions	Without derating			± 30° possible, in relation to normal vertical mounting plane			
Flame resistance	Conforming to UL 94			V 1	V1	V1	V1
	Conforming to IEC 60695-2-1			960°	960°	960°	960°
Shock resistance ▲ 1/2 sine wave = 11ms	Contactor open			10 g	10 g	10 g	8 g
	Contactor closed			15 g	15 g	15 g	15 g
Vibration resistance ▲ 5 to 300 Hz	Contactor open			2 g	2 g	2 g	2 g
	Contactor closed			4 g	4 g	4 g	4 g

Pole characteristics

Number of poles				3	3 or 4	3	3 or 4
Rated operational current (Ie)	In ac-3, θ ≤ 55°C (131°F)		A	9	12	18	25
	In ac-1, θ ≤ 40°C (104°F)		A	25	25	32	40
Rated operational voltage (Ve)	Up to		V	690	690	690	690
Frequency limits	Of the operational current		Hz	25 to 400	25 to 400	25 to 400	25 to 400
Rated thermal current (Ith)	θ ≤ 40°C (104°F)		A	25	25	32	40
Rated making capacity (1 rms)	Conforming to IEC 60947-4		A	250	250	300	450
Rated breaking capacity (1 rms)	Conforming to IEC 60947	220-380-415-440 V	A	250	250	300	450
		500 V		175	175	250	400
		690 V		85	85	120	180
Permissible short time rating from cold state, no current flowing for previous 15 minutes, at θ ≤ 40 °C (104 °F)	For 1 s		A	210	210	240	380
	For 10 s		A	105	105	145	240
	For 1 min		A	61	61	84	120
	For 10 min		A	30	30	40	50
Short-circuit protection	By circuit breaker			Select circuit breaker in accordance with NEC and local codes			
	By fuses			Maximum 400% of motor full load Amps			
Average impedance per pole	A Ith and 50 Hz		mΩ	2.5	2.5	2.5	2
Power dissipation per pole for the above operational currents	AC-3		W	0.20	0.36	0.8	1.25
	AC-1		W	1.56	1.56	2.5	3.2

◆ Protection provided for the cable c.s.a. indicated on page 84 and for cable connections.
▲ In the least favorable direction, without change of contact state (coil supplied at Ve).

© 2001 Schneider Electric All Rights Reserved

Control Circuit Characteristics

Type						LC1D09	LC1D12	LC1D18	LC1D25
Rated control circuit voltage (Vc)		50 or 60 Hz			V	21 to 660			
Control voltage limits (θ ≤ 55 °C [131 °F])	50 or 60 Hz coils	Operational				0.8 to 1.1 Vac			
		Drop-out				0.3 to 0.6 Vac			
	50/60 Hz coils	Operational				0.85 to 1.1 Vac at 60 Hz			
		Drop-out				0.3 to 0.6 Vac			
Average consumption at 20 °C (68 °F) and at Vc	50 Hz ac	Inrush	50 Hz coil		VA	–	–	–	–
			Cos φ			0.75	0.75	0.75	0.75
			50/60 Hz coil		VA	70	70	70	10
		Sealed	50 Hz coil		VA	–	–	–	–
			Cos φ			0.3	0.3	0.3	0.3
			50/60 Hz coil		VA	7	7	7	7
	60 Hz ac	Inrush	60 Hz coil		VA	–	–	–	–
			Cos φ			0.75	0.75	0.75	0.75
			50/60 Hz coil		VA	70	70	70	100
		Sealed	60 Hz coil		VA	–	–	–	–
			Cos φ			0.3	0.3	0.3	0.3
			50/60 Hz coil		VA	7.5	7.5	7.5	7.5
Heat dissipation	50/60 Hz				W	2 to 3	2 to 3	2 to 3	2.5 to 3.5
Operating time	Closing "C" ■				ms	12 to 22	12 to 22	12 to 22	15 to 24
	Opening "O" ▲				ms	4 to 19	4 to 19	4 to 19	5 to 19
Mechanical durability in millions of operating cycles	50 or 60 Hz coil					–	–	–	–
	50/60 Hz coil at 50 Hz					15	15	15	15
Maximum operating rate at ambient temperature ≤ 55 °C (131 °F)	In operating cycles per hour					3600	3600	3600	3600

■ The closing time "C" is measured from the moment the coil supply is switched on to initial contact of the main poles.
▲ The opening time "O" is measured from the moment the coil supply is switched off to the moment the mains poles separate.

© 2001 Schneider Electric All Rights Reserved

DC Control Circuit Characteristics

Type of contactor				LC1 D09 to D38	LP1 D12 and D25	LC1 or LP1 D40 to D65	LC1 or LP1D80	LC1D115 & LC1D150
Rated control circuit voltage (Uc)	dc		V	12 to 440		12 to 440		24 to 440
Rated insulation voltage	Conforming to IEC 60947-1		V	690				
	Conforming to UL, CSA		V	600				
Control voltage limits	Operational	Standard coil		0.7 to 1.25 Uc at 60 °C	0.8 to 1.1 Uc @ 55 °C	0.85 to 1.1 Uc at 55 °C		0.75 to 1.2 Uc at 55 °C
		Wide range coil		–	0.7 to 1.25 Uc @ 55 °C	0.75 to 1.2 Uc at 55 °C		–
	Drop-out			0.1 to 0.25 Uc at 60 °C		0.1 to 0.3 Uc at 55 °C		0.15 to 0.4 Uc at 55 °C
Average consumption at 20 °C and at Uc	dc	Inrush	W	5.4	9/11	22	22	270 to 365
		Sealed	W	5.4	9/11	22	22	2.4 to 5.1
Average operating time at Uc (1)	Closing	"C"	ms	55	52 - 64	85 to 110	95 to 130	20 to 35
	Opening	"O"	ms	20	8 - 14	20 to 35	20 to 35	40 to 75
	Note: The arcing time depends on the circuit switched by the poles. For normal three-phase applications, the arcing time is usually less than 10 ms. The load is isolated from the supply after a time equal to the sum of the opening time and the arcing time.							
Time constant (L/R)			ms	28	42	65	75	25
Mechanical life at Uc	In millions of operating cycles			30	30	20	20	8
Maximum operating rate at ambient temperature ≤ 60 °C	In operating cycles per hour			3600	3600	3600	3600	1200

Low Consumption Control Circuit Characteristics

Rated insulation voltage	Conforming to IEC 60947-1		V	690
	Conforming to UL, CSA		V	600
Maximum voltage	Of the control circuit on dc			250
Average consumption dc at 20 °C and at Uc	Wide range coil (0.7 to 1.25 Uc)	Inrush	W	2.4
		Sealed	W	2.4
Operating time (1) at Uc and at 20 °C	Closing	"C"	ms	70
	Opening	"O"	ms	25
Voltage limits (θ ≤ 60 °C) of the control circuit	Operational			0.7 to 1.25 Uc
	Drop-out			0.1 to 0.3 Uc
Time constant (L/R)			ms	40
Mechanical life	In millions of operating cycles			30
Maximum operating rate	At ambient temperature ≤ 60 °C		ops/h	3600
Rated insulation voltage	Conforming to UL, CSA		V	600
	Conforming to IEC 60947-1		V	690

(1) Operating times depend on the type of contactor electromagnet and its control mode.
The closing time "C" is measured from the moment the coil supply is switched on to initial contact of the main poles. The opening time "O" is measured from the moment the coil supply is switched off to the moment the main poles separate.

Selection: page 141, 142 Dimensions: page 121 - 124 Schematics: pages 125, 126

© 2001 Schneider Electric All Rights Reserved

Contactor Integral Auxiliary Contact Characteristics

Linked contacts conforming to draft standard IEC 60947-4-5	Each contactor has two N/O and N/C contacts mechanically linked on the same movable contact holder.			
Mirror contact	The N/C contact on each contactor represents the state of the power contacts and can be connected to a PREVENTA safety module			
Rated operational voltage (Ue)	Up to		V	690
Rated insulation voltage (Ui)	Conforming to IEC 60947-1		V	690
	Conforming to UL, CSA		V	600
Conventional thermal current (Ith)	For ambient temperature ≤ 60 °C		A	10
Operating current frequency			Hz	25 to 400
Minimum switching capacity	U min.		V	17
	I min.		mA	5
Short-circuit protection	Conforming to IEC 60947-5-1			gG fuse: 10 A
Rated making capacity	Conforming to IEC 60947-5-1, I rms		A	ac: 140, dc: 250
Short-time rating	Permissible for	1 s	A	100
		500 ms	A	120
		100 ms	A	140
Insulation resistance			MΩ	> 10
Non-overlap time	Guaranteed between N/C and N/O contacts		ms	1.5 on energizing and on de-energizing
Contact operating power conforming to IEC 60947-5-1	**ac supply categories AC-14 and AC-15** Electrical life (valid for up to 3600 operating cycles/hour) on an inductive load such as the coil of an electromagnet: making power (cos φ 0.7) = 10 times the power broken (cos φ 0.4).		**dc supply category DC-13** Electrical life (valid for up to 1200 operating cycles/hour) on an inductive load such as the coil of an electromagnet, without economy resistor, the time constant increasing with the load.	

	V	24	48	115	230	400	440	600	V	24	48	125	250	440
1 million operating cycles	VA	60	120	280	560	960	1050	1440	W	96	76	76	76	44
3 million operating cycles	VA	16	32	80	160	280	300	420	W	48	38	38	32	–
10 million operating cycles	VA	4	8	20	40	70	80	100	W	14	12	12	–	–

AC-15

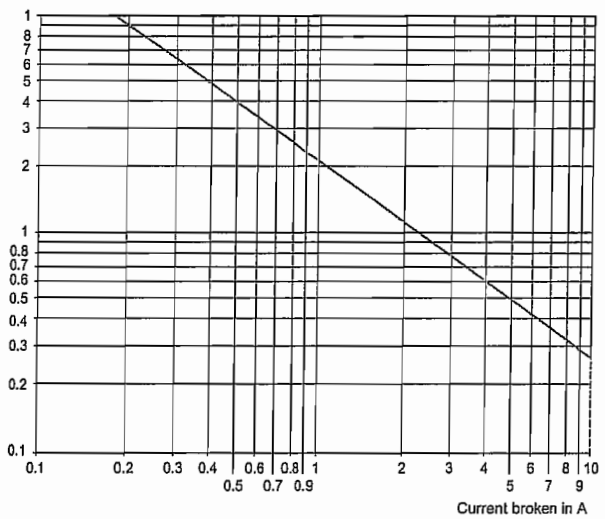

DC-13

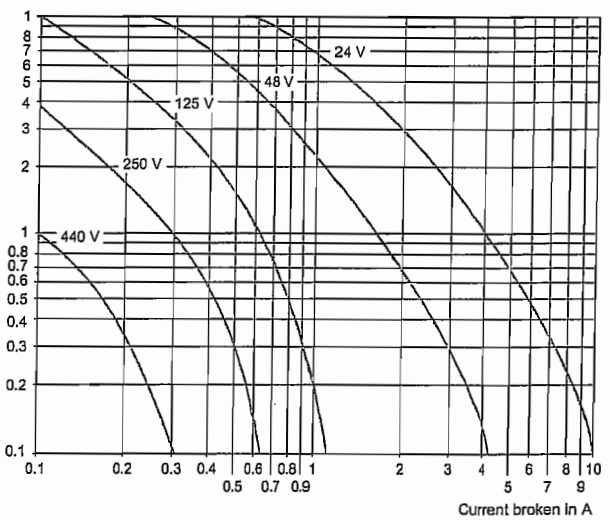

Selection: page 141, 142 Dimensions: page 121 - 124 Schematics: pages 125, 126

© 2001 Schneider Electric All Rights Reserved

Power Circuit Connections

Type				LC1D09 LC1D12	LC1D18	LC1D25
Cabling (for screw clamp terminals)		Connector type		Screw clamp terminals		
	Stranded cable without cable end	1 conductor	AWG	18-10	18-8	18-8
		2 conductors	AWG	18-10	18-8	18-8
		1 conductor	mm^2	1/4	1.5/6	1.5/10
		2 conductors	mm^2	1/4	1.5/6	1.5/6
	Flexible cable with cable end	1 conductor	AWG	18-10	18-3	18-3
		2 conductors	AWG	18-10	18-10	18-10
		1 conductor	mm^2	1/4	1/6	1/6
		2 conductors	mm^2	1/2.5	1/4	1/4
	Solid cable without cable end	1 conductor	AWG	18-8	18-8	18-8
		2 conductors	AWG	18-8	18-8	18-8
		1 conductor	mm^2	1/4	1.5/6	1.5/6
		2 conductors	mm^2	1/4	1.5/6	1.5/6
	Phillips head type			N° 2	N° 2	N° 2
	Screwdriver Ø			Ø 6	Ø 6	Ø 6
	Hexagon spanner			–	–	–
	Tightening torque			15 lb.-in. 1.7 N•m	15 lb.-in. 1.7 N•m	23 lb.-in. 2.5 N•m
Bus bar connection (for bus bar or ring tongue terminals)				Connection by bus bar or ring tongue terminals		
	Bar c.s.a.			–	–	–
	Lug external Ø		mm	8	8	10
	Screw Ø		mm	M3.5	M3.5	M4
	Phillips head type			N° 2	N° 2	N° 2
	Screwdriver Ø			Ø 6	Ø 6	Ø 6
	Hexagon spanner			–	–	–
	Tightening torque			15 lb.-in. 1.7 N•m	15 lb.-in. 1.7 N•m	15 lb.-in. 1.7 N•m
Flexible cabling (for spring terminals)				Spring terminals		
	Flexible cable without cable end	1 conductor	AWG	14	12	12
		2 conductors	AWG	14	12	12
		1 conductor	mm^2	2.5	4	4
		2 conductors	mm^2	2.5	4	4

Control Circuit Connections

Type				LC1D09 LC1D12	LC1D18	LC1D25
Connection by cable						
Screw clamp terminals						
Cabling	Stranded cable without cable end	1 or 2 conductors	AWG	18-14	18-14	18-14
		1 conductor	AWG (mm^2)	18 - 10 (1/4)	18 - 10 (1/4)	18 - 10 (1/4)
		2 conductors	AWG (mm^2)	18 - 10 (1/4)	18 - 10 (1/4)	18 - 10 (1/4)
	Stranded cable with cable end	1 conductor	AWG (mm^2)	18 - 10 (1/4)	18 - 10 (1/4)	18 - 10 (1/4)
		2 conductors	AWG (mm^2)	18 - 12 (1/2.5)	18 - 12 (1/2.5)	18 - 12 (1/2.5)
	Solid cable without cable end	1 conductor	AWG (mm^2)	18 - 10 (1/4)	18 - 10 (1/4)	18 - 10 (1/4)
		2 conductors	AWG (mm^2)	18 - 10 (1/4)	18 - 10 (1/4)	18 - 10 (1/4)
Phillips head type				N° 2	N° 2	N° 2
Screwdriver Ø			mm	Ø 6	Ø 6	Ø 6
Tightening torque				15 lb.-in. 1.7 N•m	15 lb.-in. 1.7 N•m	17 lb.-in. 1.7 N•m
Connection by bus bar or ring tongue terminals						
Lug external Ø			mm	8	8	8
Screw Ø			mm	M3.5	M3.5	M3.5
Phillips head type				N° 2	N° 2	N° 2
Screwdriver Ø				3/16 in. Ø 6	3/16 in. Ø 6	3/16 in. Ø 6
Tightening torque				15 lb.-in. 1.7 N•m	15 lb.-in. 1.7 N•m	15 lb.-in. 1.7 N•m

© 2001 Schneider Electric All Rights Reserved

Selection of Contactors for Motor Control

The tables below show the kilowatt ratings (for international applications) and horsepower ratings (for North American applications) of contactors for motor control.

NOTE: 3-pole contactors without auxiliary contacts conform to standard EN50012. For further information on auxiliary contact blocks and modules, see pages 106 to 107.

AC and DC Control Circuit — 3-pole Contactors with Touch-safe Terminals for Power Cabling (AC-3 category)

Maximum horsepower ratings						Maximum Inductive Current in AC-3 Category 600 V	Standard power ratings of 3-phase motors 50/60 Hz in category AC-3							Rated Operating Current in AC-3 up to 440 V	Instantaneous Auxiliary Contacts		Catalog Number ▼◆	Weight lb (kg)
1-phase 50/60 Hz		3-phase 50/60 Hz																
115/ 120 V	230/ 240 V	200/ 208 V	220/ 240 V	460/ 480 V	575 V 600 V		220 V 230 V	380 V 400 V	415 V	440 V	500 V	660 V 690 V	1000 V		N/O	N/C		
HP	HP	HP	HP	HP	HP	A	kW	kW	kW	kW	kW	kW	kW	A				
0.5	1	2	2	5	7.5	9	2.2	4	4	4	5.5	5.5	–	9	1	1	LC1D09••	0.71 (0.320)
1	2	3	3	7.5	10	12	3	5.5	5.5	5.5	7.5	7.5	–	12	1	1	LC1D12••	0.72 (0.325)
1	3	5	5	10	15	18	4	7.5	9	9	10	10	–	18	1	1	LC1D18••	0.73 (0.330)
2	3	7.5	7.5	15	20	25	5.5	11	11	11	15	15	–	25	1	1	LC1D25••	0.82 (0.370)
2	5	10	10	20	30	32	7.5	15	15	15	18.5	18.5	–	32	1	1	LC1D32••	0.83 (0.375)
Not for North American applications ▲						38	9	18.5	18.5	18.5	18.5	18.5	–	38	1	1	LC1D38•• ✣	0.84 (0.380)
3	5	10	10	30	30	40	11	18.5	22	22	22	30	22	40	1	1	LC1D40••	3.11 (1.400)
3	7.5	15	15	40	40	50	15	22	25	30	30	33	30	50	1	1	LC1D50••	3.11 (1.400)
5	10	20	20	50	50	65	18.5	30	37	37	37	37	37	65	1	1	LC1D65••	3.11 (1.400)
7.5	15	25	30	60	60	80	22	37	45	45	55	45	45	80	1	1	LC1D80••	3.53 (1.590)
Not for North American applications						95	25	45	45	45	55	45	45	95	1	1	LC1D95•• ✣	3.58 (1.610)
–	–	30	40	75	100	115	30	55	59	59	75	80	75	115	1	1	LC1D115••	5.38 (2.420)
–	–	40	50	100	125	150	40	75	80	80	90	100	90	150	1	1	LC1D150••	5.42 (2.440)

◆ For **LC1D09** to **LC1D38**: clip-on mounting on 35 mm DIN rail **AM1DP** or screw mounting.
For **LC1D40** to **LC1D95**: clip-on mounting on 35 mm DIN rail **AM1DE** or 75 mm DIN rail **AM1DL** or screw mounting.
For **LC1D115** and **LC1D150**: clip-on mounting on 2 x 35 mm DIN rails **AM1DP** or screw mounting.
▼ Use voltage codes on page 49 "Coil Selection" to complete catalog number.
▲ Devices are UL Listed at the same HP rating as 32 amp devices.
✣ LC1D38 and LC1D95 are UL listed at the same HP rating as 32 and 80 amp devices respectively.

LC1D09••

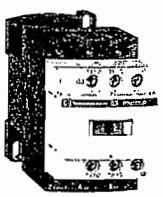

LC1D25••

LC1D95••

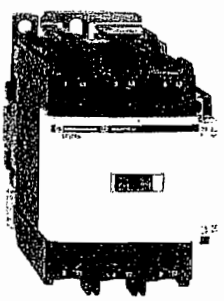

LC1D115••

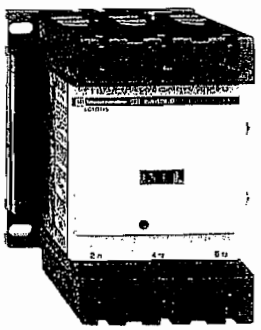

© 2001 Schneider Electric All Rights Reserved

NOTE: Voltage codes in bold face are typical control voltages..

Contactors LC1K, LC2K (0.8 to 1.15 Vc)

Volts AC 50/60 Hz	12	20	24 ▲	36	42	48	110	120	127	200/ 208	220/ 230 ◆	230	230/ 240 ◆	256	277	380/ 400 ◆	400	400/ 415 ◆	440	480	500	575	600	660/ 690 ◆
Voltage Code	J7	Z7	**B7**	C7	D7	E7	F7	**G7**	FC7	L7	M7	P7	**U7**	W7	UE7	Q7	V7	N7	R7	**T7**	S7	SC7	**X7**	Y7

Up to and including 240 V, coil with integral suppression device available: add 2 to the code required. Example: J72.

▲ When connecting an electronic sensor or timer in series with the coil of the control relay, select a 20 V coil (AC control circuit voltage code Z7, DC control circuit voltage code ZD) so as to compensate for the incurred voltage drop.

◆ 0.85 to 1.1 Vc.

Contactors LC7K, LC8K (0.85 to 1.1 Vc)

Volts AC 50/60 Hz	24	42	48	110	120	220	230/ 240
Voltage Code	**B7**	D7	E7	F7	**G7**	M7	**U7**

Contactors LP1K, LP2K (0.8 to 1.15 Vc)

Volts DC	12	20	24 ▲	36	48	60	72	100	110	125	155	174	200	220	230	240	250
Voltage Code	JD	ZD	**BD**	CD	ED	ND	**SD**	KD	FD	**GD**	PD	QD	LD	MD	MPD	MUD	UD

Coil with integral suppression device available: add 3 to the code required. Example: JD3.

▲ When connecting an electronic sensor or timer in series with the coil of the control relay, select a 20 V coil (AC control circuit voltage code Z7, DC control circuit voltage code ZD) so as to compensate for the incurred voltage drop.

LC1D, LC2D AC/DC Supply (3 Pole)

AC Coils

LC1D09 . . . D38

	24 V	42 V	48 V	110 V	115 V	120 V	127 V	208 V	220 V	230 V	240 V	277 V	380 V	400 V	415 V	440 V	480 V	500 V	575 V	600 V	660 V
50/60 Hz	**B7**	D7	E7	F7	FE7	**G7**	FC7	LL7	M7	P7	**U7**	W7	Q7	V7	N7	R7	**T7**	–	SC7	**X7**	–

LC1D12 & D25, 4 Pole

50/60 Hz	**B7**	D7	E7	F7	FE7	**G7**	–	LE7	M7	P7	**U7**	–	Q7	V7	N7	R7	–	–	SC7	–	–
50 Hz	B5	D5	E5	F5	FE5	–	G5	–	M5	P5	U5	–	Q5	V5	N5	R5	–	S5	–	–	Y5
60 Hz	B6	–	E6	F6	–	G6	–	L6	M6	–	U6	W6	Q6	–	N6 ★	R6	T6	–	S6	X6	–

★ N6 voltage code not availabel for LC1D25 4-pole contactor.

LC1D40 . . . D95, 3 or 4-Pole

50/60 Hz	**B7**	D7	E7	F7	FE7	**G7**	–	–	M7	P7	**U7**	–	Q7	V7	N7	R7	–	–	–	–	–
50 Hz	B5	D5	E5	F5	FE5	–	G5	–	M5	P5	U5	–	Q5	V5	N5	R5	–	S5	–	–	Y5
60 Hz	B6	–	E6	F6	–	G6	–	L6	–	–	U6	W6	–	–	–	R6	T6	–	S6	X6	–

LC1D115 & D150 Coils with integral suppression device fitted as standard

50/60 Hz	**B7**	D7	E7	F7	FE7	**G7**	FC7	LE7	M7	P7	**U7**	UE7	Q7	V7	N7	R7	T7	S7	–	–	–
50 Hz	B5	D5	E5	F5	FE5	–	FC5	–	M5	P5	U5	–	Q5	V5	N5	R5	–	S5	–	–	–
60 Hz	B6	–	E6	F6	–	G6	–	L6	M6	–	U6	W6	Q6	–	–	R6	T6	–	–	–	–

DC Coils

LC1D09 . . .D38 Coils with integral suppression device fitted as standard

	5 V	12 V	20 V	24 V	36 V	48 V	60 V	72 V	96 V	110 V	125 V	220 V	250 V	440 V	–	–	–	–	–	–	–
U 0.7 . . . 1.25 Uc	–	JD	–	**BD**	CD	**ED**	ND	**SD**	–	FD	**GD**	MD	UD	RD	–	–	–	–	–	–	–

LC1D09 . . . D38 LOW CONSUMPTION Coils with integral suppression device fitted as standard

U 0.7 . . . 1.25 Uc	AL	JL	ZL	BL	CD	EL	–	SL	DL	FL	–	ML	UL	–	–	–	–	–	–	–	–

LC1D40 . . . D95, 3-Pole Coils with integral suppression device fitted as standard

U 0.85 . . . 1.1 Uc (standard)	–	JD	–	**BD**	CD	**ED**	ND	**SD**	–	FD	**GD**	MD	UD	RD	–	–	–	–	–	–	–
U 0.75 . . . 1.2 Uc (wide range)	–	JW	–	BW	CW	EW	–	SW	–	FW	–	MW	–	–	–	–	–	–	–	–	–

LC1D115 & D150 Coils with integral suppression device fitted as standard

U 0.75 . . . 1.2 Uc	–	–	–	**BD**	–	**ED**	ND	**SD**	–	FD	**GD**	MD	UD	RD	–	–	–	–	–	–	–

© 2001 Schneider Electric All Rights Reserved

D-Line Contactors AC Control Circuits

LC1D09 to D18 (3-pole)

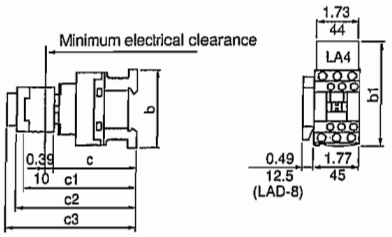

LC1D25 to D38 (3-pole)
LC1DT20 to DT60 (4-pole)

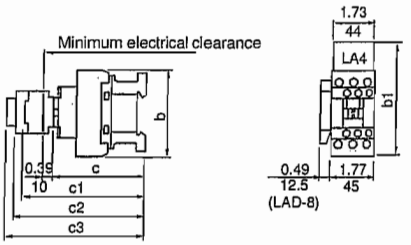

LC1		D09 to D18	D093 to D183	D099 to D189	D25 to D38	D253 and D323	DT20 and DT25	DT203 and DT253	DT32 to DT60	DT323 and DT603
b	without add-on blocks	3.03 (77)	3.89 (99)	3.14 (80)	3.36 (85)	3.89 (99)	3.34 (85)	3.89 (99)	3.58 (91)	4.13 (105)
b1	with LAD4BB	3.70 (94)	4.21 (107)	3.75 (95.5)	3.85 (98)	4.21 (107)	3.85 (98)	–	–	–
	with LA4D●2	4.33 (110) (1)	4.84 (123) (1)	4.30 (111.5) (1)	4.48 (114) (1)	4.84 (123) (1)	4.48 (114)	–	–	–
	with LA4DF, DT	4.68 (119) (1)	5.19 (132) (1)	4.76 (120.5) (1)	4.84 (123) (1)	5.19 (132) (1)	5.02 (129)	–	–	–
	with LA4DR, DW, DL	4.96 (126) (1)	5.67 (139) (1)	5.0 (127.5) (1)	5.11 (130) (1)	5.47 (139) (1)	7.48 (190)	–	–	–
c	without cover or add-on blocks	3.30 (84)	3.30 (84)	3.30 (84)	3.54 (90)	3.54 (90)	3.54 (90)	3.54 (90)	3.85 (98)	3.85 (98)
	with cover, without add-on blocks	3.38 (86)	3.38 (86)	3.38 (86)	3.62 (92)	3.62 (92)	3.62 (92)	3.62 (92)	3.93 (100)	3.93 (100)
c1	with LADN or C (two or four contacts)	4.60 (117)	4.60 (117)	4.60 (117)	4.84 (123)	4.84 (123)	4.84 (123)	4.84 (123)	5.15 (131)	5.15 (131)
c2	with LA6DK10, LAD6K10	5.07 (129)	5.07 (129)	5.07 (129)	5.31 (135)	5.31 (135)	5.31 (135)	5.31 (135)	5.62 (143)	5.62 (143)
c3	with LADT, R, S	5.39 (137)	5.39 (137)	5.39 (137)	5.62 (143)	5.62 (143)	5.62 (143)	5.62 (143)	5.94 (151)	5.94 (151)
	with LADT, R, S and sealing cover	5.55 (141)	5.59 (141)	5.55 (141)	5.78 (147)	5.78 (147)	5.78 (147)	5.78 (147)	6.10 (155)	6.10 (155)

(1) Including LAD4BB

LC1D40 to D65 (3-pole)
LC1D65004, D40008 and D65008 (4-pole)

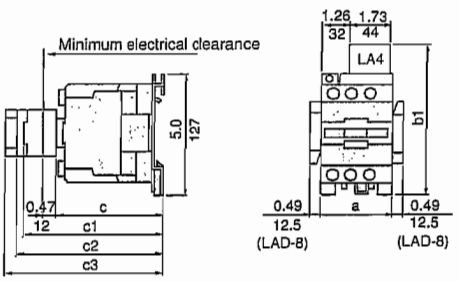

LC1D80 and D95 (3-pole)
LC1D80004 and D80008 (4-pole)

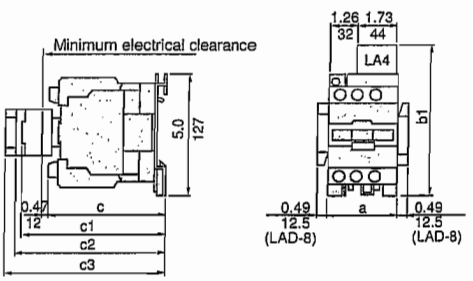

LC1		D40 to D65	D40008	D80 D65004	D95 D65008	D80004	D80008
a		2.95 (75)	3.34 (85)	3.34 (85)	3.34 (85)	96	96
b1	with LA4D●2	5.31 (135)	5.31 (135)	5.31 (135)	5.31 (135)	5.31 (135)	5.31 (135)
	with LA4DB3	–	–	5.31 (135)	–	–	–
	with LA4DF, DT	5.59 (142)	5.59 (142)	5.59 (142)	5.59 (142)	5.59 (142)	5.59 (142)
	with LA4DM, DR, DW, DL	5.90 (150)	5.90 (150)	5.90 (150)	5.90 (150)	5.90 (150)	5.90 (150)
c	without cover or add-on blocks	4.72 (114)	4.92 (125)	4.92 (125)	4.92 (125)	4.92 (125)	5.51 (140)
	with cover, without add-on blocks	4.68 (119)	–	5.11 (130)	5.11 (130)	–	–
c1	with LADN (one contact)	5.47 (139)	5.47 (139)	5.90 (150)	5.90 (150)	5.90 (150)	5.90 (150)
	with LADN or C (two or four contacts)	5.78 (147)	5.78 (147)	6.22 (158)	6.22 (158)	6.22 (158)	6.22 (158)
c2	with LA6DK	6.25 (159)	6.25 (159)	6.69 (170)	6.69 (170)	6.69 (170)	6.69 (170)
c3	with LADT, R, S	6.57 (167)	6.57 (167)	7.00 (178)	7.00 (178)	7.00 (178)	7.00 (178)
	with LADT, R, S and sealing cover	6.73 (171)	6.73 (171)	7.16 (182)	7.16 (182)	7.16 (182)	7.16 (182)

Dimensions inches / mm

LC1D115 and D150 (3-pole)
LC1D115004 (4-pole)

LC1		D115 D150	D115004	D115006	D150006	D1150046
a		4.72 (120)	5.90 (150)	4.72 (120)	4.72 (120)	6.10 (155)
b1	with LA4DA2	6.85 (174)	6.85 (174)	6.85 (174)	6.85 (174)	6.85 (174)
	with LA4DF, DT	7.28 (185)	7.28 (185)	7.28 (185)	7.28 (185)	7.28 (185)
	with LA4DM, DR, DL	7.40 (188)	7.40 (188)	7.40 (188)	7.40 (188)	7.40 (188)
	with LA4DW	7.40 (188)	7.40 (188)	7.40 (188)	–	7.40 (188)
c	without cover or add-on blocks	5.1'9 (132)	5.1'9 (132)	4.52 (115)	4.52 (115)	4.52 (115)
	with cover, without add-on blocks	5.35 (136)	–	–	–	–
c1	with LADN or C (two or four contacts)	5.90 (150)	5.90 (150)	5.90 (150)	5.90 (150)	5.90 (150)
c2	with LA6DK20	6.10 (155)	6.10 (155)	6.10 (155)	6.10 (155)	6.10 (155)
c3	with LADT, R, S	6.61 (168)	6.61 (168)	6.61 (168)	6.61 (168)	6.61 (168)
	with LADT, R, S and sealing cover	6.77 (172)	6.77 (172)	6.77 (172)	6.77 (172)	6.77 (172)

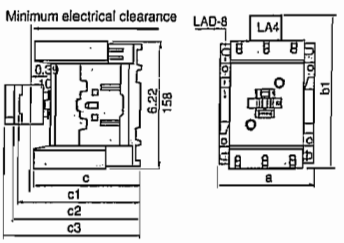

Selection: page 141, 142 Characteristics: page 82, 83 Schematics: pages 125, 126

© 2001 Schneider Electric All Rights Reserved

Please note that the data given here has been taken from the online catalog. For comprehensive information and data, please refer to the user documentation at http://www.download.phoenixcontact.com. The General Terms and Conditions of Use apply to Internet downloads.

Extract from the online catalog

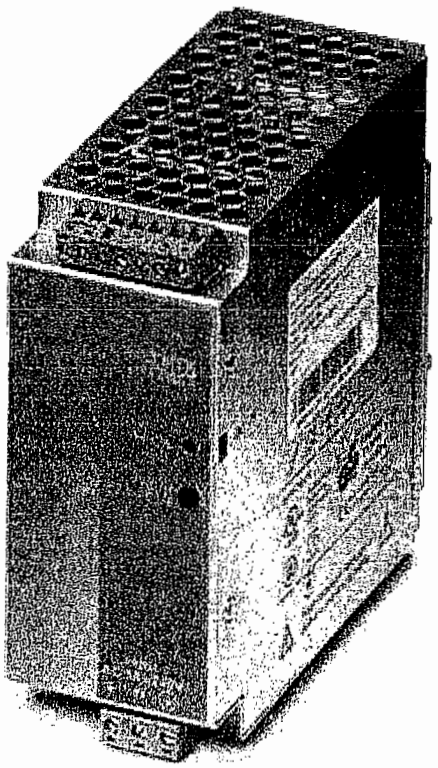

Primary switched-mode power supply unit, 1-phase, output: 24 V DC / 5 A

Order No.	2938581
Ord designation	QUINT-PS-100-240AC/24DC/5
EAN	4017918890520
Pack	1 Pcs.
Customs tariff	85044094
Catalog page information	Page 412 (IF-2005)

Technical data

Product description

QUINT POWER is the high-capacity DC current supply of 60 - 960 watts for universal use worldwide. This is ensured by the wide-range input, one and three-phase versions as well as an international approval package that has yet to be matched. QUINT POWER stands for guaranteed supply: Generously dimensioned capacitors guarantee a mains buffering of more than 20 ms under full load. All three-phase devices provide the full output power, even in the event of a continuous phase failure. The Power Boost power reserve easily starts loads with high inrush currents and ensures that fuses are reliably triggered. A preventive function monitoring diagnoses improper operating states and minimizes downtime in your system. Remote monitoring is provided by an active transistor switching output and a floating relay contact. All devices are protected against idling and short circuits and are available with a regulated and adjustable output voltage of 12, 24 and 48 volts DC with output currents of 2.5, 5, 10, 20, 30 and 40 A. The comprehensive range of products is rounded off by power supplies for use in the Ex zone 2, uninterruptible solutions, AS-i power supplies and a Quint diode.

Input data

Nominal input voltage	100 V AC ... 240 V AC
Input voltage range	85 V AC ... 264 V AC
Input voltage range	90 V DC ... 350 V DC
Frequency range	45 Hz ... 65 Hz (0 Hz with DC input)
Current consumption	Approx. 1.6 A (At 120 V AC (nominal load))
Current consumption	Approx. 0.84 A (At 230 V AC (nominal load))
Inrush surge current	< 15 A (Typical)
Power failure bypass	> 20 ms (For 120 V AC)
Power failure bypass	> 120 ms (For 230 V AC)
Input fuse	5 A (Slow-blow, internal)
Name of protection	Transient surge protection
Protective circuit/component	Varistor

Output data

Nominal output voltage	24 V +/-1 %
Setting range of the output voltage	22.5 V DC ... 28.5 V DC
Output current	5 A (Up to 60° C)
Output current	7.5 A (With POWER BOOST)
Connection in parallel	Yes, for assembling redundant systems and increasing efficiency
Max. capacitive load	unbegrenzt
Current limitation	Approx. I_{BOOST} = 7.5 A (for short circuit)
Control deviation	< 1 % (Change in load, static 10 - 90%)
Control deviation	< 2 % (Change in load, dynamic 10 - 90%)
Control deviation	< 0.1 % (Change in input voltage +/-10%)
Residual ripple	< 100 mVss (With nominal values)
Peak switching voltages nominal load	< 100 mVss (20 MHz)
Maximum power dissipation idling	2 W
Power loss nominal load max.	14 W

General data

Width	55 mm
Height	130 mm
Depth	125 mm
Weight	0.83 kg
Operating voltage display	LED green
Efficiency	> 89 %
Insulation voltage input/output	4 kV AC (Type test)
Insulation voltage input/output	2 kV AC (Routine test)
Degree of protection	IP20
Class of protection	Class 1, with PE connection
MTBF	> 500 000 h in acc. with IEC 1709 (SN 29 500)
Ambient temperature (operation)	-25 ° C ... 70 ° C (> 60° C derating)
Ambient temperature (storage/transport)	-40 ° C ... 85 ° C
Max. permissible. relative humidity (operation)	95 % (At 25° C, no condensation)
Installation position	On horizontal DIN rail NS 35 in acc. with EN 60715
Assembly instructions	Can be aligned: Vertical with spacing = 8 cm
Approval	UL
Approval	GL
Standard - Electrical safety	EN 60 950 / VDE 0805 (SELV), EN 61 558-2-17
Standard - Electrical safety	CB scheme
Standard - Electrical safety	UL/C-UL recognized UL 60950
Standard - Safe isolation	DIN VDE 0100-410, DIN VDE 0106-1010
Electromagnetic compatibility	*CE* compliance with EMC directive 89/336/EEC
Emitted interference	EN 50081-2
Immunity to interference	EN 61000-6-2

Connection data, input

Type of connection	COMBICON screw/plug connection
Conductor cross section, rigid min.	0.2 mm
Conductor cross section, rigid max.	2.5 mm
Conductor cross section flexible min.	0.2 mm
Conductor cross section, flexible max.	2.5 mm
Conductor cross section AWG/kcmil min.	24
Conductor cross section AWG/kcmil max	12
Stripping length	7 mm
Screw thread	M 3

Connection data, output

Type of connection	COMBICON screw/plug connection
Conductor cross section, rigid min.	0.2 mm²
Conductor cross section, rigid max.	2.5 mm²
Conductor cross section flexible min.	0.2 mm²
Conductor cross section, flexible max.	2.5 mm²
Conductor cross section AWG/kcmil min.	24
Conductor cross section AWG/kcmil max	12
Stripping length	7 mm

Signaling

Output name	DC OK active
Output description	U_{out} > 0.9 x U_N: High signal
Output voltage	+ 24 V DC (Signal)
Continuous current	Max. 40 mA
Status display	LED green (U_{out} < 0.9 x U_N: LED flashes)
Output name	DC OK floating
Output description	Relay contact, U_{out} >0.9 x U_N: Contact closed
Continuous current	Max. 1 A
Maximum switching voltage	Max. 30 V AC/DC

Drawings

Block diagram

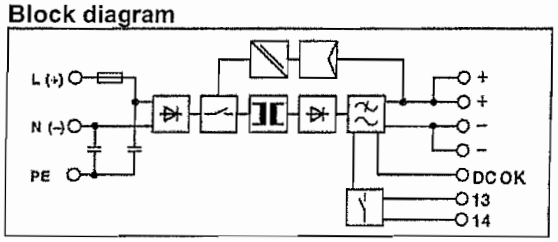

Schematic diagram

UL 489 LISTED C60N CIRCUIT BREAKERS

Overview

A family of circuit breakers meeting UL 489 requirements is now available in the MULTI 9 product line. These products meet many applications in which UL 1077 Recognized supplementary protectors are not allowed.

As shown in the table of catalog numbers below, the UL 489 Listed products are available in C and D curves. They include devices ranging from 0.5 A to 35 A.

Standard Features

- Fast closing: Allows increased withstand to the high inrush currents of some loads.
- Trip-free mechanism: Contacts cannot be held in the on (O) position when the C60 circuit breaker is tripped automatically.
- Isolation with positive break indication: Green strip on the operating handle indicates that all poles are open.
- C curve: Overcurrent protection for all application types. Magnetic release operates from 7 to 10 times ampere rating.
- D curve: Overcurrent protection for loads with high inrush currents (motors, transformers). Magnetic release operates between 10 and 14 times ampere rating.

Connection

Two versions of field wiring connectors are available for the UL 489 Listed devices:

- Box lug meeting UL 486A requirements
- Ring tongue terminal with 5 mm screw

The circuit breakers can be ordered with the following combinations of connectors:

- Line terminal box lug/ load terminal box lug
- Line terminal ring tongue/ load terminal ring tongue
- Line terminal box lug/ load terminal ring tongue

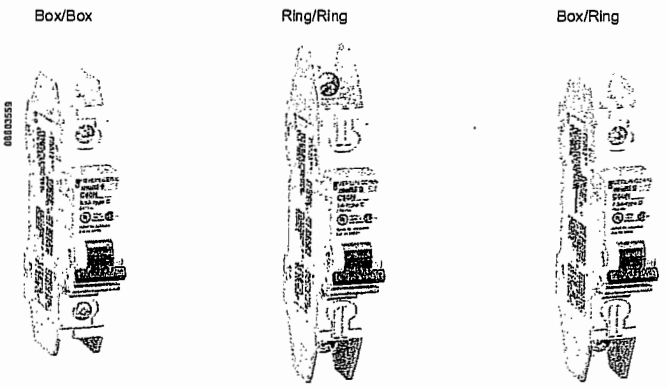

Figure 11: Connection Options for UL 489 Listed Devices

Table 4: Specifications for UL 489 Listed Circuit Breakers

• Package size: Two 0.35 in. (9 mm) modules; 0.71 in. (18 mm) width per pole • Voltage (nominal): 120 and 240 Vac delta • High voltage withstand: 6 kV • Connection, box lug: — 0.5–25 A: #18–#4 AWG (1–25 mm²) cables; torque 22 lb-in. (2.48 N•m) — 30–35 A: #18–#2 AWG (1–35 mm²) cables; torque 31 lb-in. (3.52 N•m) • Connection, ring terminal: Use single UL Listed or CSA Certified insulated ring tongue only, with screw dia. 0.2 in. (5 mm); torque 18 lb-in. (2.03 N•m) • Mounting: 1.38 in. (35 mm) DIN rail • Time/Current curves: C and D curves	• Degree of protection: — Case: IP40 as per IEC 529 — Terminals: IP20 • Rating on ring tongue connector: UL 486A File #E90509 (use with copper wire only) — Screw dia. 0.20 in. (5 mm) — Recommended terminal width 1.57 in. (40 mm) • Temperatures: — Calibration: 77°F (25°C) — Storage: -40 to 176°F (-40 to 80°C) — Operating: -22 to 158°F (-30 to 70°C) • Tropicalization: Treatment 2—relative humidity: 95% at 131°F (55°C) • Number of operating cycles: — Electrical (O-C): 6,000 load, 4,000 no-load • See selection table for weights and interrupting ratings

Standards

- UL 489 Circuit Breaker: File #E215117
- CSA C22.2 #5.1 Circuit Breakers: File #179014
- IEC 60947-2
- VDE 0660, CE Marked

© 1995–2001 Schneider Electric All Rights Reserved

Table 5: C Curve, with UL 489 Listed Termination Options (line/load as box lug or ring tongue terminals)

Rating (A)	1-pole			2-pole			3-pole		
	Box/Box	Ring/Ring	Box/Ring	Box/Box	Ring/Ring	Box/Ring	Box/Box	Ring/Ring	Box/Ring
0.5	60100	60200	60300	60134	60234	60334	—	—	—
1	60101	60201	60301	60135	60235	60335	60168	60268	60368
1.5	60102	60202	60302	60136	60236	60336	60169	60269	60369
2	60103	60203	60303	60137	60237	60337	60170	60270	60370
3	60104	60204	60304	60138	60238	60338	60171	60271	60371
4	60105	60205	60305	60139	60239	60339	60172	60272	60372
5	60106	60206	60306	60140	60240	60340	60173	60273	60373
6	60107	60207	60307	60141	60241	60341	60174	60274	60374
7	60108	60208	60308	60142	60242	60342	60175	60275	60375
8	60109	60209	60309	60143	60243	60343	60176	60276	60376
10	60110	60210	60310	60144	60244	60344	60177	60277	60377
13	60111	60211	60311	60145	60245	60345	60178	60278	60378
15	60112	60212	60312	60146	60246	60346	60179	60279	60379
20	60113	60213	60313	60147	60247	60347	60180	60280	60380
25	60114	60214	60314	60148	60248	60348	60181	60281	60381
30	60115	60215	60315	60149	60249	60349	60182	60282	60382
35	60116	60216	60316	60150	60250	60350	60183	60283	60383

Table 6: D Curve, with UL 489 Listed Termination Options (line/load as box lug or ring tongue terminals)

Rating (A)	1-pole			2-pole			3-pole		
	Box/Box	Ring/Ring	Box/Ring	Box/Box	Ring/Ring	Box/Ring	Box/Box	Ring/Ring	Box/Ring
0.5	60117	60217	60317	60151	60251	60351	—	—	—
1	60118	60218	60318	60152	60252	60352	60184	60284	60384
1.5	60119	60219	60319	60153	60253	60353	60185	60285	60385
2	60120	60220	60320	60154	60254	60354	60186	60286	60386
3	60121	60221	60321	60155	60255	60355	60187	60287	60387
4	60122	60222	60322	60156	60256	60356	60188	60288	60388
5	60123	60223	60323	60157	60257	60357	60189	60289	60389
6	60124	60224	60324	60158	60258	60358	60190	60290	60390
7	60125	60225	60325	60159	60259	60359	60191	60291	60391
8	60126	60226	60326	60160	60260	60360	60192	60292	60392
10	60127	60227	60327	60161	60261	60361	60193	60293	60393
13	60128	60228	60328	60162	60262	60362	60194	60294	60394
15	60129	60229	60329	60163	60263	60363	60195	60295	60395
20	60130	60230	60330	60164	60264	60364	60196	60296	60396
25	60131	60231	60331	60165	60265	60365	60197	60297	60397
30	60132	60232	60332	60166	60266	60366	60198	60298	60398
35	60133	60233	60333	60167	60267	60367	60199	60299	60399

NOTE: The UL 489 Listed MULTI 9 C60N circuit breakers are certified at 77°F (25°C), unlike some other UL 489 circuit breakers which are certified at 104°F (40°C). Depending on the operating environment, you may need to rerate according to the tables on page 81 to determine the appropriate handle rating.

NOTE: UL 489 Listed circuit breakers should be loaded to no more than 80% if used with continuous loads; that is unlike UL 1077 recognized supplementary protectors, which may be operated at 100% of rating.

© 1995–2001 Schneider Electric All Rights Reserved

Unmanaged switches with 6 or 8 ports

Just the right switches for your needs: an 8-port switch with RJ45 or 6-port switches with a fiber optic connection to bridge larger distances.

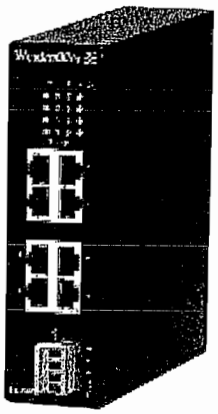

IE-SW8

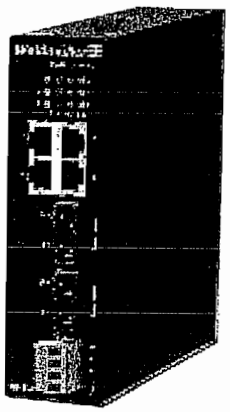

IE-SW4/2SC

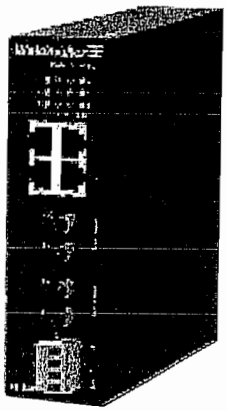

IE-SW4/2ST

Name	IE-SW8	IE-SW4/2SC	IE-SW4/2ST
Order no.	8808240000	8808250000	8808260000
Housing	Metal	Metal	Metal
Dimensions (H x W x D)	156 x 44 x 140 mm	156 x 44 x 140 mm	156 x 44 x 140 mm
Number of ports	8xRJ45	4xRJ45, 2xSC	4xRJ45, 2xST
Input voltage	10–36 Vdc, 8–24 Vac	10–36 Vdc, 8–24 Vac	10–36 Vdc, 8–24 Vac
Input power	6 watts DC, 6 VA AC	6 watts DC, 6 VA AC	6 watts DC, 6 VA AC
Input frequency	N/A DC, 47 – 63 Hz AC	N/A DC, 47 – 63 Hz AC	N/A DC, 47 – 63 Hz AC
Operating temperature	0 °C to +60 °C	0 °C to +60 °C	0 °C to +60 °C
Storage temperature	-40 °C to +85 °C	-40 °C to +85 °C	-40 °C to +85 °C
Mounting	TS35, wall	TS35, wall	TS35, wall
Class of protection	IP20	IP20	IP20
Complies with standard	ANSI/IEEE 802.x	ANSI/IEEE 802.x	ANSI/IEEE 802.x
Data rate/segment length	RJ45/100 m 10BASE-T/100BASE-TX	RJ45/100 m: 10BASE-T/100BASE-TX SC connection for fiber optic: 100BASE-FX (1,300 nm) Multi-mode: 2 km	RJ45/100 m: 10BASE-T/100BASE-TX ST connection for fiber optic: 100BASE-FX (1,300 nm) Multi-mode: 2 km
Functions	Auto-negotiation, redundant power supply	Auto-negotiation, redundant power supply	Auto-negotiation, redundant power supply
Flow control	Half duplex/full duplex	Half duplex/full duplex	Half duplex/full duplex
LED displays	Power, data rate, link/activity, PE identifier	Power, data rate, link/activity, PE identifier	Power, data rate, link/activity, PE identifier
Approvals	CE, UL508, c-UL	CE, UL508, c-UL	CE, UL508, c-UL

NB: Use crossover cables to link these switches with one another.

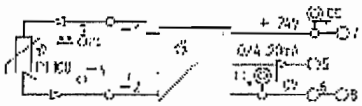

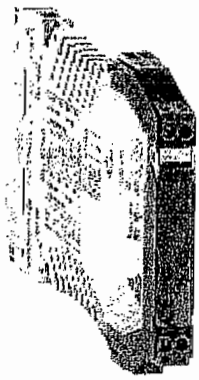

General ordering data

Order No.	8432150000
Short text for material	WTS4 PT100/3 C 0/4-20mA
EAN	4032248056880
Qty	1

Input

Sensor	PT100/3-conductor
Temperature input range	adjustable -200...+800°C
Number of inputs	1

Output

Output current	0(4)...20 mA
Load impedance, current	≤ 500 Ω
Function	3-conductor connection
Accuracy	± 0.5% of measuring range
Linearisation	Yes
Temperature coefficient	Measuring range ≥ 200 K: ≤ 200 ppm/K (typ. 80 ppm/K) 100 K <= measuring range <= 200 K: <= 250 ppm/K (typ. 100 ppm/K) 40 K <= measuring range <= 100 K: <= 500 ppm/K
Number of outputs	1

General data

Function	PT100
Input/Output	PT100/ 0(4)...20 mA
Electrical isolation	without isolation
Type of connection	Screw connection
Terminal rail	TS 35
Current consumption	< 48 mA at IOUT = 20 mA
Current-carrying capacity of cross-connect.	≤ 2 A
Supply voltage	24 V DC ± 20 %
Operating temperature	0 °C...+55 °C
Storage temperature	-20 °C...+85 °C

Insulation coordination

Standards	EN 50178, EN 60751, IEC751
EMC standards	EN 55011, EN 61000-6

Dimensions

Clamping range, min.	0,5 mm²
Clamping range, nom.	2,5 mm²
Clamping range, max.	2,5 mm²
Length	92,4 mm
Height	112,4 mm
Width	12,5 mm

Approvals

Approvals	

Classifications

ETIM 2.0	EC001446
ETIM 3.0	NK
eClass 4.1	27-20-02-06
eClass 5.0	27-20-02-06

Related products

Order No.	Short text for material
8432160000	WTZ4 PT100/3 C 0/4-20mA
8432159999	WTS4 PT100/3 C 0/4-20mA variable
8432169999	WTZ4 PT100/3 C 0/4-20mA variable
8432150001	WTS4 PT100/3 C 0-20mA 0...100C
8432160001	WTZ4 PT100/3 C 0-20mA 0...100C
8432150011	WTS4 PT100/3 C 4-20mA 0...100C
8432160011	WTZ4 PT100/3 C 4-20mA 0...100C
8432090000	WTS4 PT100/3 V 0-10V
8432130000	WTZ4 PT100/3 V 0-10V
8432099999	WTS4 PT100/3 V 0-10V variabel
8432139999	WTZ4 PT100/3 V 0-10V variabel
8432090001	WTS4 PT100/3 V 0-10V 0...100C
8432130001	WTZ4 PT100/3 V 0-10V 0...100C

Zelio - Plug-in relays

Type RSB, RXL and RUN relays

Interface relays

RSB 2A080pp, RSB 1A160pp

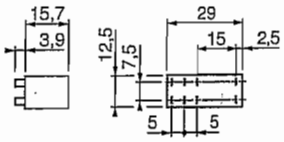

RSB 1A120pp

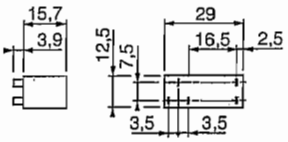

Sockets

RSZ E1S48M

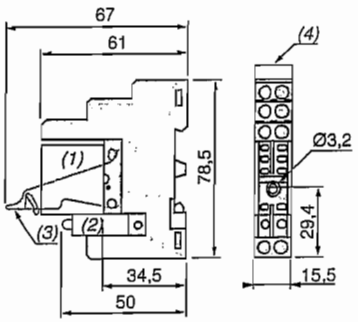

RSZ E1S35M

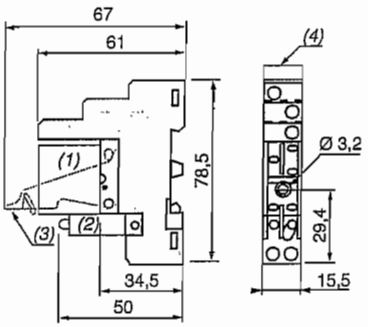

Miniature relays

RXN 21E1ppp, RXN 41G1ppp, RXLppp

Sockets

RXZ E1M114

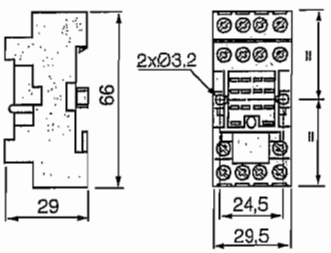

RXZ E1S108M

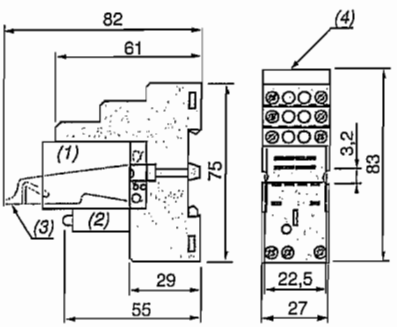

RXZ E1S111M

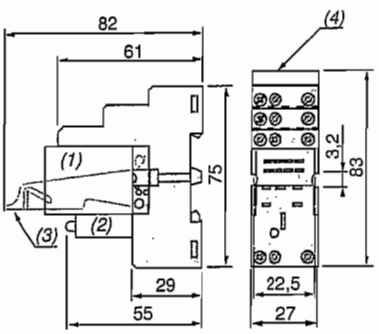

RXZ E1S114M

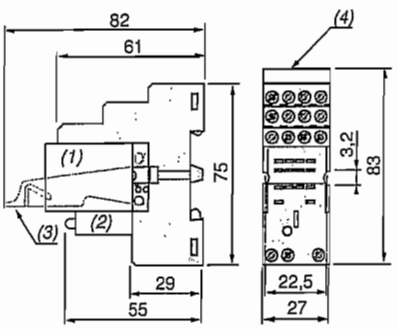

RXZ E1M114M

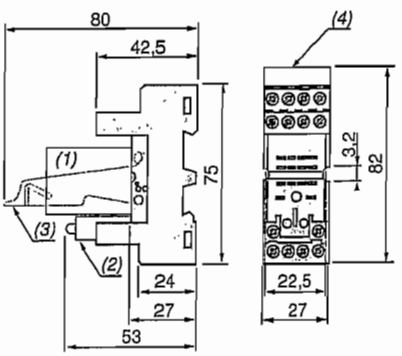

(1) Relays, (2) Add-on protection module,
(3) Maintaining clamp, (4) Legend.

Interface relays *(1)*

RSB 2A080●●

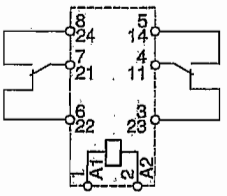

RSB 1A120●●

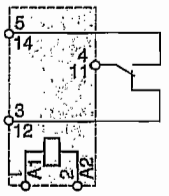

RSB 1A160●●

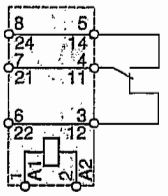

When using relay RSB 1A160●● with socket RSZ E1S48M : terminals 11 and 21, 14 and 24, 12 and 22 must be linked.

Miniature relays *(1)*

RXL 2●●

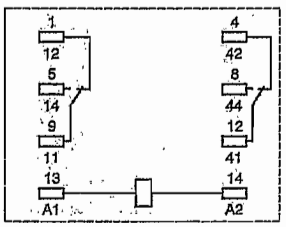

RXL 3●●

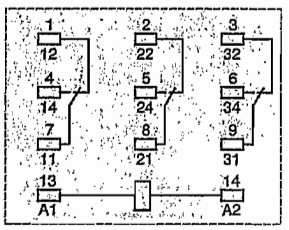

RXL 4●●

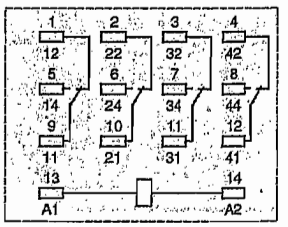

Universal relays *(1)*

RUN 21D2●●●, RUN 21C2●●●

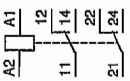

RUN 21D2●●●

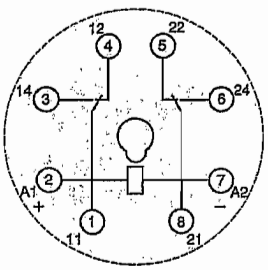

RUN 21C2●●●

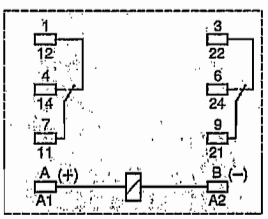

RUN 31A2●●●, RUN 33A2●●●
RUN 31C2●●●

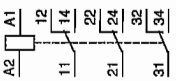

RUN 33A2●●●, RUN 31A2●●●

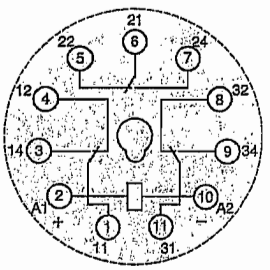

RUN 31C2●●●

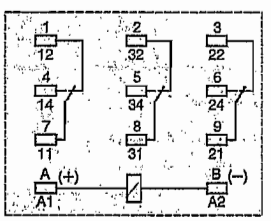

(1) Grey references are those marked on the relay .

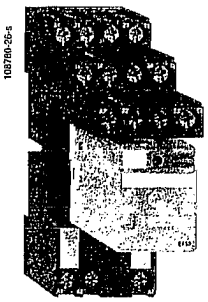

RXL 4A06B1BD + RXZ E1S114M

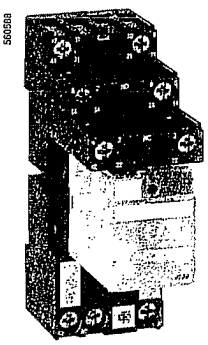

RXL 2A12B2BD + RXZ P20 + RXZ E1S108M

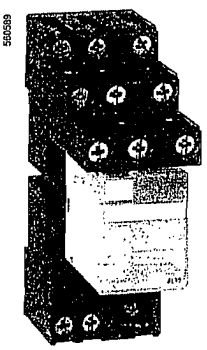

RXL 3A10B2BD + RZM 031RB + RXZ P10 + RXZ E1S111M

References

Relays for standard applications *(1)*

Number of C/O contacts	Conventional rated thermal current	LED	Sold in lots of	Unit catalogue number, to be completed by adding the control voltage code (2)	Weight
	A				kg
2	12	Green	10	RXL 2A12B2●●	0.036
		Without	10	RXL 2A12B1●●	0.035
3	10	Green	10	RXL 3A10B2●●	0.036
		Without	10	RXL 3A10B1●●	0.035
4	6	Green	10	RXL 4A06B2●●	0.036
		Without	10	RXL 4A06B1●●	0.035

Relays with gold-flashed contacts *(1)*

4	6	With	10	RXL 4G06B2●●	0.036
		Without	10	RXL 4G06B1●●	0.035

Protection modules for sockets RXZ 7G

Description	Type	Voltage	Sold in lots of	Unit catalogue number	Weight
		V			kg
Diode	L	⎓ 12...250	10	RXW 040MD	0.010

Protection modules for relay/sockets RXZ E●●●●M

Diode		⎓ 6...230	10	RZM 040W	0.003
Diode + green LED	E	⎓ 6...24	10	RZM 031RB	0.004
		⎓ 24...60	10	RZM 031BN	0.004
		⎓ 110...230	10	RZM 031FPD	0.004
Varistor + green LED	E	⎓ or ∼ 6...24	10	RZM 021RB	0.005
		⎓ or ∼ 24...60	10	RZM 021BN	0.005
		⎓ or ∼ 110...230	10	RZM 021FP	0.005
RC circuit	E	∼ 24...60	10	RZM 041BN7	0.010
		∼ 110...240	10	RZM 041FU7	0.010

(2) Standard control circuit voltages

Volts		12	24	48	110	120	230
⎓		JD	BD	ED	FD	–	–
∼ (50/60 Hz)	RXL	–	B7	E7	→	F7	P7

For other voltages, please contact your local Schneider Electric sales representative or authorized distributor.

Coil characteristics

Control circuit voltage Uc	d.c. supply: Average resistance at 20 °C ± 10%	Cod.	Operating voltage limits Min.	Operating voltage limits Max.	a.c. supply 50/60 Hz: Average resistance at 20 °C ± 15 %	Cod.	Operating voltage limits Min.	Operating voltage limits Max.
V	Ω		V	V	Ω		V	V
RXL relays								
12	160	JD	9.6	13.2	–	–	–	–
24	640	BD	19.2	26.4	158	B7	19.2	26.4
48	2600	ED	38.4	52.8	640	E7	38.4	52.8
110	13 600	FD	88	121	–	–	–	–
120	–	–	–	–	3770	F7	96	132
230	–	–	–	–	16 100	P7	184	253

(1) These relays have a lockable Test button on their front face, which can be converted to non-lockable or can be eliminated; see accessories on page 9.

Zelio - Plug-in relays
Type RXL miniature relays

Relay type				RXL 2A12B●●●	RXL 3A10B●●●	RXL 4A06B●●●	RXL 4G06B●●●
Contact characteristics							
Number and type of contacts				2 C/O	3 C/O	4 C/O	
Contact materials				AgNi			AgNi/AU 5 µ
Conventional rated thermal current (Ith)	For temperature ≤ 40 °C		A	12	10	6	
Maximum operating rate in operating cycles/h	No-load			18 000			
	Under load			1200			
Switching voltage	Minimum		V	5			
	Maximum		V	∼ 250, ⎓ 250			
Breaking capacity	Minimum		mA	5	5	5	2
	Maximum		VA	3000	2500	1500	1500
Coil characteristics							
Rated voltage (Un)		∼	V	24...230, 50/60 Hz			
		⎓	V	12...110			
Average consumption		∼	VA	1.6			
		⎓	W	0.9			
Permissible voltage variation				0.8...1.1 Un (50/60 Hz or ⎓)			
Drop-out voltage threshold		∼		≥ 0.15 Un			
		⎓		≥ 0.1 Un			
Environment							
Compliance with standards	Standard version			IEC 61810-1			
Product certifications (pending)	Standard version			UL, CSA			
Ambient air temperature around the device	Storage		°C	- 40...+ 85			
	Operation		°C	⎓ - 40...+ 70, ∼ - 40...+ 55			
Vibration resistance	Conforms to IEC 68-2-6			> 5 gn (10...150 Hz)			
Degree of protection				IP 40			
Shock resistance				10 gn (closing), 5 gn (opening)			
Mechanical durability	In millions of operating cycles			≥ 20		≥ 20	
Operating time (response time)	Between coil energisation and making the On-delay contact	∼	ms	About 12			
		⎓	ms	About 12			
	Between coil de-energisation and making the Off-delay contact	∼	ms	About 12			
		⎓	ms	About 4			
Electrical durability In millions of operating cycles/h	Resistive load			12 A - 250 V : ≥ 0.1	10 A - 250 V : ≥ 0.1	6 A - 250 V : ≥ 0.1	
	Inductive load			See curves below			
Insulation characteristics							
Rated insulation voltage (Ui)	Conforms to IEC 947		V	250			
Insulation class	Conforms to VDE 0110			C 250		B 250	
Dielectric strength (rms voltage)	Between coil and contact	∼	V	2500			
	Between poles		V	2500		2000	
	Between contacts	∼	V	1500			

Electrical durability of contacts
Resistive load ∼

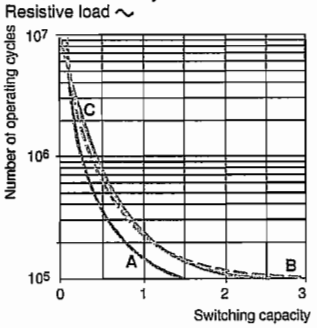

A *RXL 4*
B *RXL 2*
C *RXL 3*

Reduction coefficient for inductive load (depending on power factor cos φ)

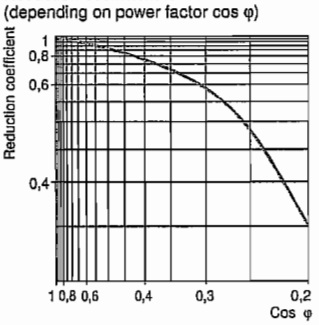

RXL 2, RXL 3 et RXL 4

Breaking capacity on a resistive load ⎓

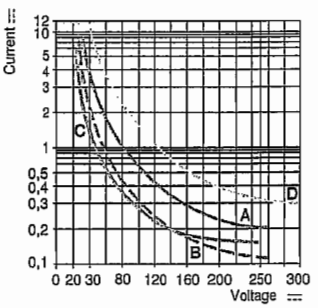

A *RXL 3 (T = 0 ms)*
B *RXL 3 (T = 40 ms)*
C *RXL 4*
D *RXL 2*

Durability (inductive load) = durability (resistive load) x reduction coefficient

Relay couplers in terminal block format

MRS 24 Vdc 1CO	MRS 24 Vuc 1CO	MRS 48 Vuc 1CO	MRS 60 Vdc 1CO	MRS 120 Vuc 1CO	MRS 230 Vac 1CO
MRZ 24 Vdc 1CO	MRZ 24 Vuc 1CO	MRZ 48 Vuc 1CO	MRZ 60 Vdc 1CO	MRZ 120 Vuc 1CO	MRZ 230 Vac 1CO

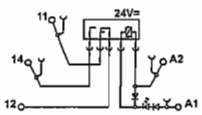

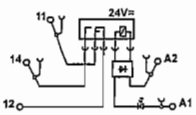

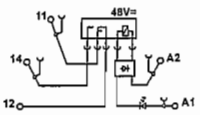

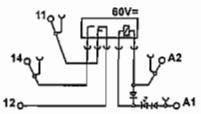

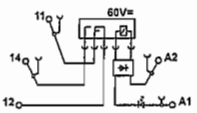

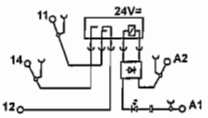

Type	Cat. No.	Type	Cat. No.	Type	Cat. No.	Type	Cat. No.	Type	Cat. No.	Type	Cat. No.
MRS 24 Vdc 1CO	8533640000	MRS 24 Vuc 1CO	8556050000	MRS 48 Vuc1CO	8556040000	MRS 60 Vdc1CO	8556060000	MRS 120 Vuc 1CO	8556030000	MRS 230 Vac1CO	8556020000
MRZ 24 Vdc 1CO	8533660000	MRZ 24 Vuc 1CO	8556120000	MRZ 48 Vuc1CO	8556110000	MRZ 60 Vdc1CO	8556130000	MRZ 120 Vuc 1CO	8556100000	MRZ 230Vac1CO	8556090000

24 Vdc ± 20 % (19.2...28.8 V)	24 Vuc ±10% (21.6...26.4 V)	48 Vuc ±10% (43.2...52.8 V)	60 Vdc ±20% (48...72 V)	120 Vuc +10% / -15% (102...132 V)	230 Vac ±10% (207...253 V)
	11 mA ± 10 %	5 mA ±20 %		3.5 mAac ±15 %	7.6 mA ±15%
6.6 mAdc ±10 %	6.4 mA ±20 %	4 mA ±20 %	3.3 mAdc ±20 %		
160 mW ±10%	154 mW ±10 %	190 mW ±20 %	200 mW ±10 %	0.42 VA ±15 %	1.55 VA ±15 %
15.4 V / 4 mA	15.8 V / 3.6 mA	29 V / 2.2 mA	35 V / 1.6 mA	71 V / 1.8 mA	103 V / 5 mA
6.5 V / 1.2 mA	7 V / 1.3 mA	11 V / 1.3 mA	11 V / 0.6 mA	22 V / 0.5 mA	49 V / 2.5 mA
Green LED	Green LED	Green LED	Green LED	Green LED	Green LED
6.6 ms	7.3 ms	6.1 ms	5.9 ms	6.7 ms	13 ms
5.8 ms	9 ms	5.8 ms	6.5 ms	8.1 ms	11 ms
24 V	24 V	48 V	60 V	60 V	24 V
yes	yes	yes	yes	yes	yes
yes	yes	yes	yes	yes	–
yes	yes	yes	yes	yes	–
1 changeover contact	1 changeover contact	1 changeover contact	1 changeover contact	1 changeover contact	1 changeover contact
250 Vac acc. to VDE	250 V ~ acc. to VDE	250 Vac acc. to VDE	250 Vac acc. to VDE	250 V ~ acc. to VDE	250 V ~ acc. to VDE
240 Vac acc. to UL/CSA	240 V ~ acc. to UL/CSA	240 Vac acc. to UL/CSA	240 Vac acc. to UL/CSA	240 V ~ acc. to UL/CSA	240 V ~ acc. to UL/CSA
max. 6 A / max. 1500 VA	max. 6 A / max. 1500 VA	max. 6 A / max. 1500 VA	max. 6 A / max. 1500 VA	max. 6 A / max. 1500 VA	max. 6 A / max. 1500 VA
max. 6 A	max. 6 A	max. 6 A	max. 6 A	max. 6 A	max. 6 A
see limit diagram	see limit diagram	see limit diagram	see limit diagram	see limit diagram	see limit diagram
12 V / 100 mA	12 V / 100 mA	12 V / 100 mA	12 V / 100 mA	12 V / 100 mA	12 V / 100 mA
AgSnO	AgSnO	AgSnO	AgSnO	AgSnO	AgSnO
20 x 10^6 switching operations	20 x 10^6 switching operations	20 x 10^6 switching operations	20 x 10^6 switching operations	20 x 10^6 switching operations	20 x 10^6 switching operations
0.1 Hz	0.1 Hz	0.1 Hz	0.1 Hz	0.1 Hz	0.1 Hz
-25 °C...+50 °C	-25 °C...+50 °C	-25 °C...+50 °C	-25 °C...+50 °C	-25 °C...+50 °C	-25 °C...+50 °C
-40 °C...+60 °C	-40 °C...+60 °C	-40 °C...+60 °C	-40 °C...+60 °C	-40 °C...+60 °C	-40 °C...+60 °C
40 °C / 93 % rel. humidity, no condensation	40 °C / 93 % rel. humidity, no condensation	40 °C / 93 % rel. humidity, no condensation	40 °C / 93 % rel. humidity, no condensation	40 °C / 93 % rel. humidity, no condensation	40 °C / 93 % rel. humidity, no condensation
CE cULus	CE cULus	CE cULus	CE cULus	CE cULus	CE cULus
300 V	300 V	300 V	300 V	300 V	300 V
4 kV	4 kV	4 kV	4 kV	4 kV	4 kV
III	III	III	III	III	III
2	2	2	2	2	2
4 kV_{eff} / 1 min	4 kV_{eff} / 1 min	4 kV_{eff} / 1 min	4 kV_{eff} / 1 min	4 kV_{eff} / 1 min	4 kV_{eff} / 1 min
≥ 5.5 mm	≥ 5.5 mm	≥ 5.5 mm	≥ 5.5 mm	≥ 5.5 mm	≥ 5.5 mm

Electromechanical Relay Interface Modules

Telemecanique

The ABR-1 electromechanical relay interface modules are designed for interfacing discrete digital input or output signals exchanged in automated equipment that comprise an automated system. Specifically, between a PLC and the field devices (I.E., contactors, solenoid valves, pilot lights, proximity sensors..).

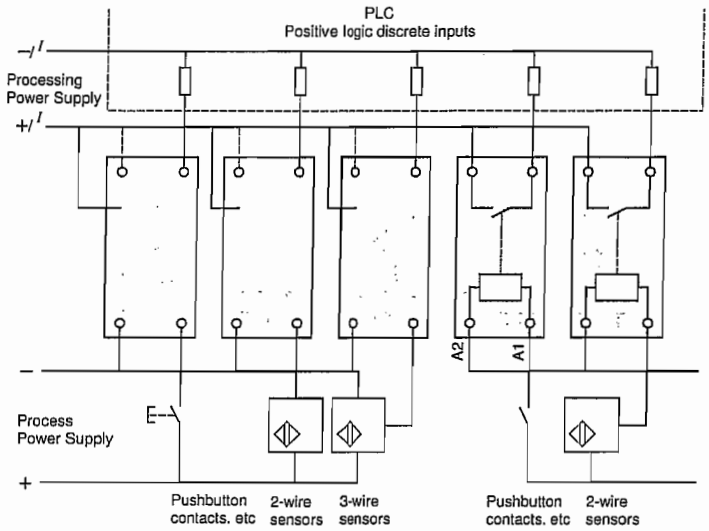

ABR-1E (Input)

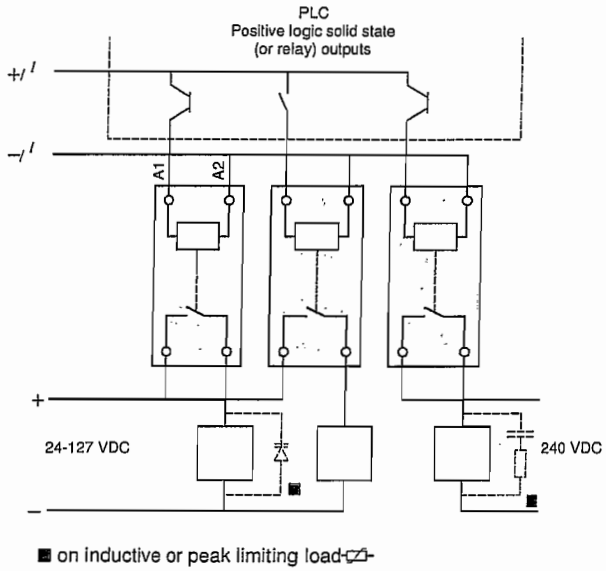

ABR-1S (Output)

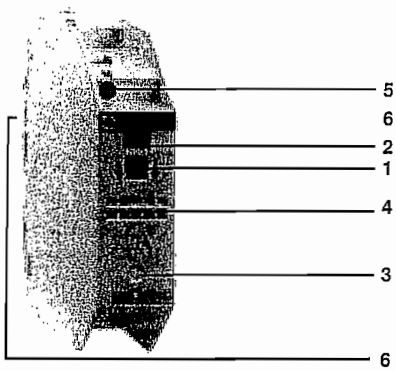

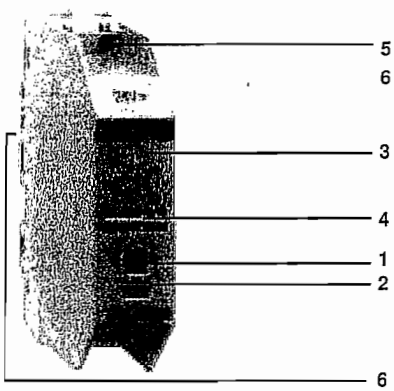

The ABR-1 range is comprised of two types:

Input Interfaces

Input interfaces are designed for switching input signals in processing units and are characterized by their high degree of contact reliability.
The switching level is sufficiently high to ensure that the interfaces can directly control most contactors and indicator lamps.

Output Interfaces

Output interfaces are designed for the control of preactuators (contractors, solenoid valves, etc) for signalling devices (indicator lamps, audible warnings, etc).

1 Push button for manual operation of contacts during de-bug and troubleshooting.
2 Green indicator showing the mechanical state of contacts.
3 Green LED indicating the control signal state.
4 Location for 5 characters (number and/or letter) terminal identification. See page 49 for complete listing of available markers.
5 The screw clamp terminals provide secure termination of one or two (stranded or solid) wires. The terminals are shipped backed out so that each terminal is ready to accept wires right out of the box, saving on installation time. Combination head screws are used to ease installation. All terminals are clearly marked to ease wiring.
6 Mounts on the common 35mm DIN 3 track or the DIN 1 track. See pages 47-48 for complete listing of available track.

Electromechanical Relay Input Interface Modules

Indicator	Contact Arrangement	Control circuit	Catalog No.	Standard Pack	Weight lb./kg
Mechanical ■	1 N/O	230/240 VAC	**ABR-1E101M**	1	.20/0.090
	1 C/O	230/240 VAC	**ABR-1E301M**	1	.20/0.090
Mechanical ■ + LED ▲	1 N/O	24 VAC/DC	**ABR-1E118B**	1	.21/0.095
		48 VAC/DC	**ABR-1E118E**	1	.21/0.095
		110-125 VDC ●	**ABR-1E112F**	1	.21/0.095
		110-127 VAC	**ABR-1E111F**	1	.21/0.095
		230/240 VAC	**ABR-1E111M**	1	.21/0.095
	2 N/O	24 VAC/DC	**ABR-1E418B**	1	.21/0.095
		48 VAC/DC	**ABR-1E418E**	1	.21/0.095
		110-125 VDC ●	**ABR-1E412F**	1	.21/0.095
		110-127 VAC	**ABR-1E411F**	1	.21/0.095
		230/240 VAC	**ABR-1E411M**	1	.21/0.095
	1 C/O	24 VAC/DC	**ABR-1E318B**	1	.21/0.095
		48 VAC/DC	**ABR-1E318E**	1	.21/0.095
		110-125 VDC ●	**ABR-1E312F**	1	.21/0.095
		110-127 VAC	**ABR-1E311F**	1	.21/0.095
		230/240 VAC	**ABR-1E311M**	1	.21/0.095

Electromechanical Relay Output Interface Modules

Indicator	Contact Arrangement	Control circuit	Catalog No.	Standard Pack	Weight lb./kg
Mechanical ■	1 N/O	24 VDC	**ABR-1S102B**	1	.20/0.090
	2 N/O	24 VDC	**ABR-1S402B**	1	.20/0.090
	1 C/O	24 VDC	**ABR-1S302B**	1	.20/0.090
	1 N/C + 1 N/O	24 VDC	**ABR-1S602B**	1	.20/0.090
Mechanical ■ + LED ▲	1 N/O	24 VAC/DC	**ABR-1S118B**	1	.21/0.095
		48 VAC/DC	**ABR-1S118E**	1	.21/0.095
		110-127 VAC	**ABR-1S111F**	1	.21/0.095
	2 N/O	24 VAC/DC	**ABR-1S418B**	1	.21/0.095
		48 VAC/DC	**ABR-1S418E**	1	.21/0.095
		110-127 VAC	**ABR-1S411F**	1	.21/0.095
	1 C/O	24 VAC/DC	**ABR-1S318B**	1	.21/0.095
		48 VAC/DC	**ABR-1S318E**	1	.21/0.095
		110-127 VAC	**ABR-1S311F**	1	.21/0.095
	1 N/C + 1 N/O	24 VAC/DC	**ABR-1S618B**	1	.21/0.095
		48 VAC/DC	**ABR-1S618E**	1	.21/0.095
		110-127 VAC	**ABR-1S611F**	1	.21/0.095

■ Green mechanical indicator for electrically or mechanically actuated contact(s).
▲ Green LED is "on" in the presence of a control signal.
● Polarised (+ on A1, - on A2).

Telemecanique

Approvals	UL File E34281, CSA LR 81630-30 and IEC			–
Conforming to standards	IEC 947-5-1, IEC 255, UL 508			
Degree of protection	Conforming to IEC 529 (protection against direct contact)			IP 20B
Protective treatment				Tropical Climate
Flame resistance	Conforming to IEC 695-2-1	Incandescent wire		1562°F/850°C
		Conforming to UL 94		V0
Shock resistance	Conforming to IEC 68-2-27	Semi-sinusoidal waves 11 ms		50 g
Vibration resistance	Conforming to IEC 68-2-6	10-55 Hz		6 g
Resistance to electrostatic discharges	Conforming to IEC 801-2	Level 3	kV	8
Resistance to rapid transients	Conforming to IEC 801-4	On power supply	kV	2
		On I/O	kV	1
Resistance to shock waves	Conforming to IEC 255-4	Waveform 1.2/50 µs ; 0.5 J	kV	2.5 (U > 50 V) ; 0.5 (U ≤ 50 V)
Cross-sections which may be connected	Flexible cable with no cable end	1 or 2-wire		18 to 14 AWG/1 to 2.5 mm²
	Flexible cable with cable end	1-wire		20 to 14 AWG/0.5 to 2.5 mm²
		2-wire		20 to 16 AWG/0.5 to 1.5 mm²
	Solid cable	1 or 2-wire		18 to 14 AWG/1 to 2.5 mm²
Operating position	Any			
Ambient air temperature	Conforming to IEC 255	Operation		23 to 104°F/-5 to +40°C
		Permissible at Un		-4 to 140°F/-20 to +60°C
		Storage		-40 to 158°F/-40 to +70°C
Operating altitude			m	≤ 3000
Installation category	Conforming to IEC 947-1			II
Degree of pollution	Conforming to IEC 947-5-1			3
Mounting	Standard rails	see pages 47-48		

Electrical Durability of Contacts

Test conditions :

In accordance with standard IEC 947-5-1 set up for rated control voltage, operating rate : 1800 cycles/hour.

AC loads

Operating cycles in millions

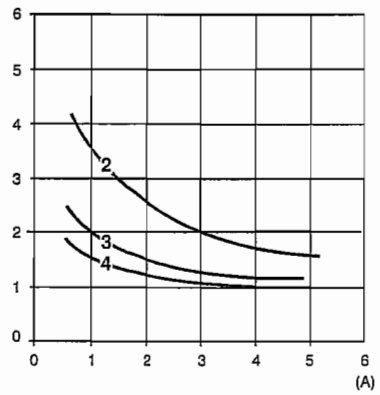

AC-12 : control of resistive loads
and isolated solid state loads
via optocoupler
cos φ ≥ 0.9

Operating cycles in millions

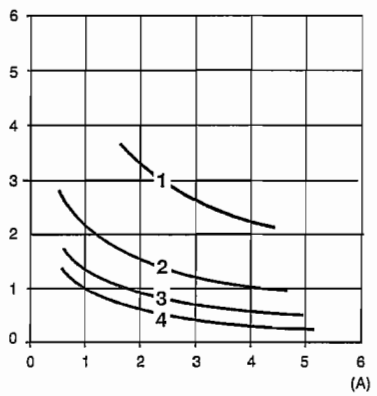

AC-13 : control of isolated solid state
loads via transformer
cos φ ≥ 0.65

Operating cycles in millions

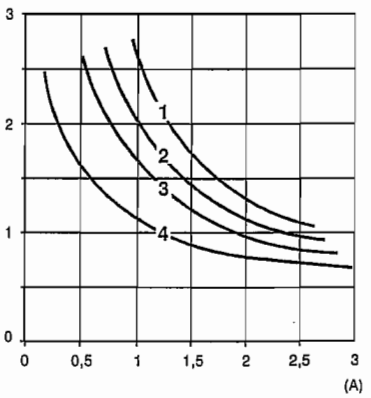

AC-14 : control of weak electro-magnetic
loads for electro-magnets ≤ 72 VA
make : cos φ = 0.3
break : cos φ = 0.3
AC-15 : control of electro-magnetic loads
of electro-magnets > 72 VA
make : cos φ = 0.7
break : cos φ = 0.4

DC loads

Operating cycles in millions

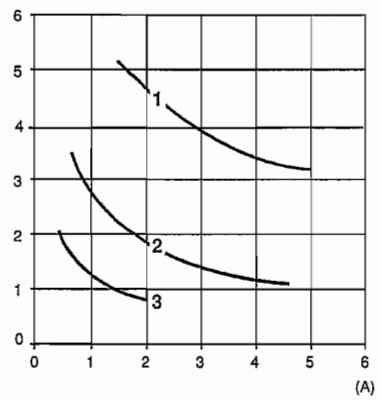

DC-12 : control of resistive loads
and isolated solid state loads
via optocoupler
L/R ≤ 1 ms
1 24 VAC/DC
2 48 VAC/DC
3 127 VAC/DC
4 230 VAC/DC

Operating cycles in millions

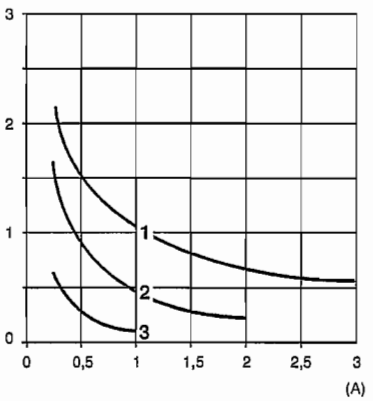

DC-13 : control of electro-magnets
L/R ≤ 2 x (Ue x Ie) in ms.
Ue : rated operating voltage
Ie : rated operating current

Control Circuit Characteristics Output Modules

Type of interface		ABR-1S102B ABR-1S402B ABR-1S302B ABR-1S602B	ABR-1S118B ABR-1S418B ABR-1S318B ABR-1S618B	ABR-1S118E ABR-1S418E ABR-1S318E ABR-1S618E	ABR-1S111F ABR-1S411F ABR-1S311F ABR-1S611F
Rated voltage (Un)	V	24 VDC	24 VAC/DC	48 VAC/DC	110 -127 VAC
Permissible voltage variation	V	17 to 30	17 to 30	38 to 53	93 to 140
Current frequency	Hz	–	50/60	50/60	50/60
Maximum drop-out voltage 104°F/40°C		> 0.1 Un	> 0.1 Un	> 0.1 Un	> 0.2 Un
Rated current VAC/DC	mA	62	62/55	38/32	8
Minimum maintaining current VAC/DC	mA	4.9/5.2	4.9/5.2	4.7/5.4	2.4
Dissipated power	W	≤ 1	≤ 1	≤ 1	≤ 1
Disappearance of voltage maximum time up to which contact is maintained	ms	3	10/10	14/10	6
Display of control circuit by LED		no	yes	yes	yes
Built-in protection reversed polarity		yes	yes	yes	not applicable

Contact Characteristics

Type of interface			ABR-1 Output Module
Rated operating voltage Ue	Conforming to IEC 947-5-1 up to	VAC	250
		VDC	125
UL Contact Rating			NEMA D150
Operating current frequency		Hz	50/60
Thermal current Ith	Conforming to IEC 947-1	A	12
Rated operating current (Ie) per 1 million operating cycles	Conforming to IEC 947-5-1 Ue : 230 VAC	A	AC-12:4
		A	AC-13:1
		A	AC-14:1
		A	AC-15:1
	Conforming to IEC 947-5-1 Ue : 24 VDC	A	DC-12:5
		A	DC-13:1
Minimum switching capacity			
		V	U min : 17
		mA	I min : 10
Protection against short-circuits	For Ik ≤ 2.5 kA Type and value of recommended fuse		Quick-blow fuse with high breaking capacity
		A	16

Other Characteristics

Operating time at Un and at 68°F/20°C	Between energization of coil and closing of N/O contact	ms	≤ 12
	Between energization of coil and opening of N/C contact	ms	≤ 12
	Between de-energization of coil and closing of N/O contact	ms	≤ 12
	Between de-energization of coil and closing of N/C contact	ms	≤ 12
Duration of bounce		ms	≤ 3
Contact bridging times between N/C and N/O contact	Maximum make before break or break before make time	ms	1
Maximum operating rate		Hz	6 operating cycles
Durability at Un in millions of operating cycles	ABR-1 (1 N/O or 2 N/O)		≥ 20 million
	ABR-1 (1 C/O or 1 N/C + 1 N/O)		≥ 10 million
Rated insulation voltage	Conforming to IEC 947-1	VAC	250
	Conforming to VDE 0110 group C	VAC	250
Test insulation voltage for 1 min	Coil circuit/contact circuits	kV rms	4
	Wired interface/earth	kV rms	2.5
	Between independent contacts 2 N/O and 1 N/C + 1 N/O	kV rms	1.5

Telemecanique

Wiring Diagrams

24 VDC or 230 VAC interfaces with mechanical indication

1 N/O

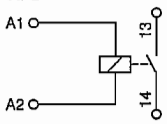

1 C/O

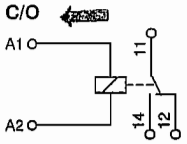

2 N/O

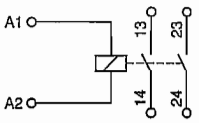

1 N/C + 1 N/O

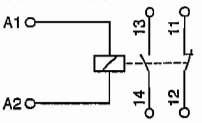

24 V AC/DC or 48 V AC/DC interfaces with mechanical indication + LED

1 N/O

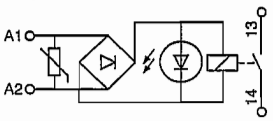

1 C/O

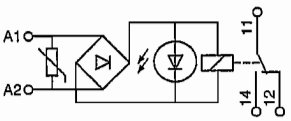

2 N/O

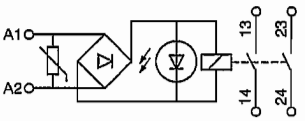

1 N/C + 1 N/O

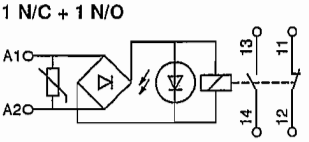

110 V AC/DC or 230 V AC/DC interfaces with mechanical indication + LED

1 N/O

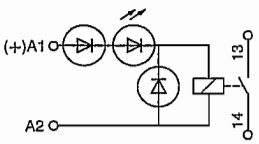

1 C/O

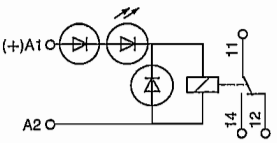

2 N/O

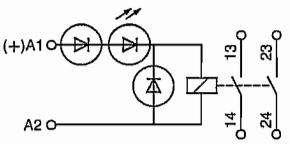

1 N/C + 1 N/O

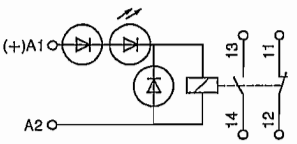

Dimensions

ABR-1

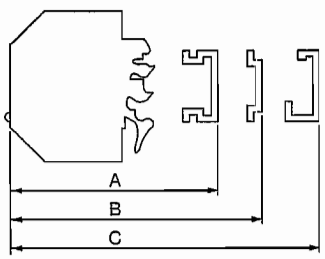

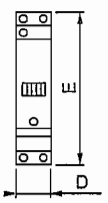

	Inches	mm
A	3.07	78.0
B	2.78	70.5
C	2.95	75.0
D	0.69	17.5
E	2.91	74.0

NEMA Type Terminal Blocks
Box Lug Termination

CLASS 9080		TYPE GM6	TYPE GR6	TYPE GR6T
		High Density Block	Without Test Probe Adapter	With Test Probe Adapter
Maximum Voltage Rating		600	600	600
Maximum Amperage Ratingv ★	UL	30	60	60
	CSA	30	60	60
Wire Range		#22 to #10 AWG	#22 to #8 AWG	#22 to #8 AWG
Maximum Wire Combination		1 - #10 1 - #12 1 - #14 1 or 2 - #16 1 or 2 - #18 1 to 5 - #20 1 to 8 - #22	1 - #8 1 - #10 1 to 3 - #12 1 to 4 - #14 1 to 4 - #16 1 to 5 - #18 1 to 8 - #20 1 to 10 - #22	1 - #8 1 - #10 1 to 3 - #12 1 to 4 - #14 1 to 4 - #16 1 to 5 - #18 1 to 8 - #20 1 to 10 - #22
Wire Type		Solid or Stranded Copper Wire	Solid or Stranded Copper Wire	Solid or Stranded Copper Wire
Density - Sections per foot		51	34	34
Approx. Dimensions (D)x(H)x(W)		1.72 x 1.82 x .235 inches 44 x 46 x 6 mm	1.72 x 1.82 x .35 inches 44 x 46 x 9 mm	1.72 x 1.82 x .35 inches 44 x 46 x 9 mm
Block Material		Nylon		
Busbar Material		Tin Plated Brass	N/A	N/A
Screw Material		Steel with Zinc Plating and Chromate Film		
Box Lug Material		Zinc Plated Steel	Copper	
Temperature Rating		-40 to 257° F -40 to 125° C	-40 to 257° F -40 to 125° C	-40 to 257° F -40 to 125° C
Flammability Rating		UL94V2	UL94V2	UL94V2
Recommended Screw Tightening Torque		7-8 lbf-in 0.8-0.9 N-m	18-20 lbf-in 2.1-2.3 N-m	18-20 lbf-in 2.1-2.3 N-m
Listings		File E60616 Guide XCFR2	File LR62144 Class 6228 01	
FINGERSAFE® per DIN 57470		YES	YES	YES
Block: Natural (White)		GM6	GR6	GR6T
Black		GMB6	GRB6	
Blue		GML6	GRL6	
Green		GMG6	GRG6	
Grey		GME6	GRE6	
Orange		GMS6	GRS6	
Red		GMR6	GRR6	
Yellow		GMY6	GRY6	
End Barrier		GM6B	GM6B	GM6B
6 Foot Assembly		GM6296BC	GR6204BC	
Mounting Track: ▲				
DIN 3 :	0.5 meter long	MH320	MH320	MH320
	1.0 meter long	MH339	MH339	MH339
	2.0 meter long	MH379	MH379	MH379
Standard:	3 Foot Long	GH136	GH136	GH136
Snap-Off:	3 Foot Long	GH236	GH236	GH236
High Rise:	3 Foot Long	GH336	GH336	GH336
End Clamps:	Screw-In	GH10	GH10	GH10
	Slip-In	GH11	GH11	GH11
	DIN 3 End Clamp	MHA10	MHA10	MHA10
Jumpers: 2 pole		GH700	GH72	GH72
6 pole		GH710	GH73	GH73
Fanning Strip			GH52	GH52
Cover			GH62	GH62
Vinyl Marking Strip		GH220	GH220	GH220
Sheets of Blank Marking Tabs			GH200	GH200
Sheets of Marked Tabs			GH210	GH210
Marking Strip End Plug		GH60	GH60	GH60

▲ For additional mounting track, see page 8.

★ These maximum current values assume the use of insulated copper conductors with 75° C temperature rating, and are calculated based on NEC Article 310, Table 310-16. In most cases this value is the maximum ampacity of that wire or combination of wires (as listed in the above table) which has the greatest current carrying capacity. The actual allowable current for a particular application is dependent upon the number, size, insulation class and other characteristics of the wires used.

Dual Dimensions: Inches / Millimeters

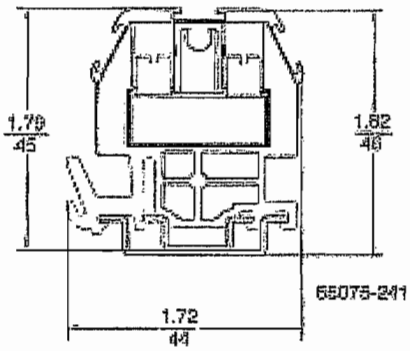

GR6
GR6T

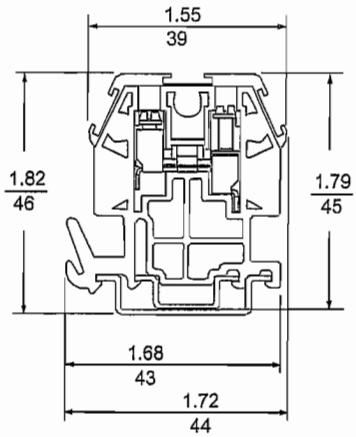

65075-354

GM6

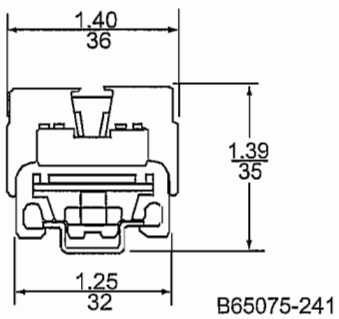

Type GK6

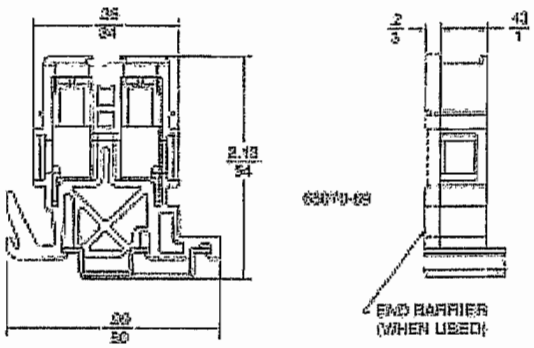

Type GC6

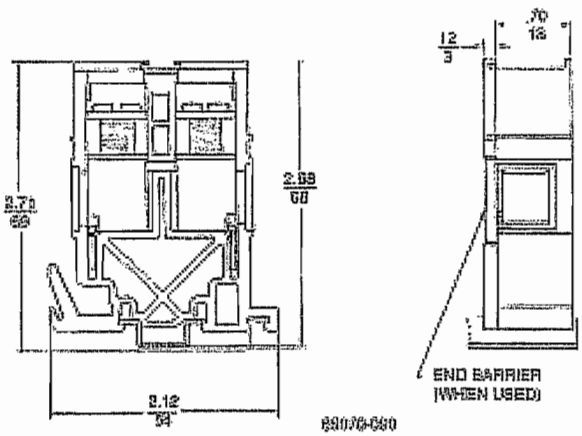

Type GD6

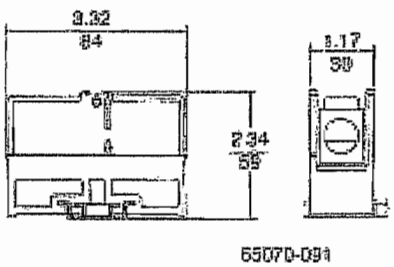

Type GE6

SAK EN Combi-foot Terminal Blocks

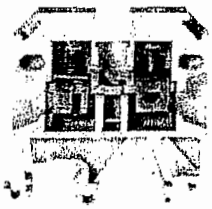
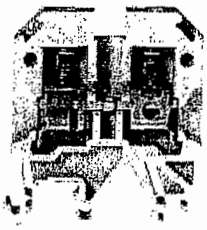
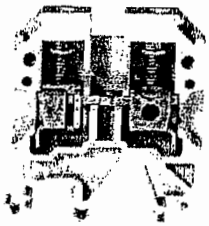
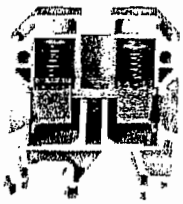

		SAK 2.5 EN			SAK 4 EN			SAK 6 EN			SAK 10 EN		
Dimensions													
Width/length/height (mm) With TS 32		6/39/46.5			6.5/40/51.5			8/40/51.5			10/42/51.5		
Width/length/height (mm) With TS 35 x 7.5		6/39/42.5			6.5/40/47.5			8/40/47.5			10/42/47.5		
Insulation stripping length/Clamping screw/blade size		10 mm			12 mm			12 mm			12 mm		
VDE rated data 0611 Part 1/8.92/IEC 947-7-1													
Rated voltage/current/cross-section		600V/25A/2.5mm^2			600V/36A/4mm^2			600V/47A/6mm^2			600V/65A/10mm^2		
Torque range Nm.		0.4...0.6			0.5...1.0			0.8...1.6			1.2...2.0		
UL/CSA rated data													
Voltage/current/conductor size	UL	600 V/20 A/28...12 AWG			600 V/30 A/22...10 AWG			600 V/40 A/22...8 AWG			600 V/60 A/14...6 AWG		
Voltage/current/conductor size	CSA	600 V/25 A/26...10 AWG			600 V/36 A/26...10 AWG			600 V/47 A/26...8 AWG			600 V/65 A/16...6 AWG		
Ordering data	Version		Cat.No.	Qty.		Cat.No.	Qty.		Cat.No.	Qty.		Cat.No	Qty.
	Beige PA		021866	100		046746	100		021286	100		033766	100
	Blue PA		021868	100		046748	100		021288	100			
	Red PA					912992	100		021284	100			
	Yellow PA					912993	100		177282	100			
	Orange PA					912994	100		177281	100		177283	100
	Green PA		021865	100		912995	100						
	Gray PA		021864	100		912996	100						
	Black PA					913098	100		021281	100		177390	100
	Brown PA					913099	100						
End plate (thickness mm)		Type	Cat.No.	Qty.	Type	Cat.No.	Qty.	Type	Cat.No.	Qty.	Type	Cat.No.	Qty.
	Beige PA	AP (1.5)	046056	20	AP (1.5)	011796	20	AP (1.5)	011796	20	AP (1.5)	011796	20
	Blue PA	AP (1.5)	046058	20	AP (1.5)	011798	20	AP (1.5)	011798	20	AP (1.5)	011798	20
	Red PA				AP (1.5)	011790	20	AP (1.5)	011790	20	AP (1.5)	011790	20
	Yellow PA				AP (1.5)	011799	20	AP (1.5)	011799	20	AP (1.5)	011799	20
	Orange PA				AP (1.5)	010516	20	AP (1.5)	010516	20	AP (1.5)	010516	20
	Green PA				AP (1.5)	011795	20	AP (1.5)	011795	20	AP (1.5)	011795	20
	Gray PA				AP (1.5)	011794	20	AP (1.5)	011794	20	AP (1.5)	011794	20
	Black PA				AP (1.5)	017791	20	AP (1.5)	017791	20	AP (1.5)	017791	20
	Brown PA				AP (1.5)	011762	20	AP (1.5)	011762	20	AP (1.5)	011762	20
Partition (thickness mm)													
TW	Beige PA	TW (1.5)	030286	20	TW (1.5)	013016	20	TW (1.5)	013016	20	TW (1.5)	013016	20
	Beige PA Small Partition	TSch 1	031916	100	TSch 1	031916	100	TSch 1	031916	100	TSch 1	031916	100
Cross-connection (Current Rating)													
	2-pole	Q2 (24A)	033700	50	Q2 (32A)	033670	50	Q2 (41A)	045670	50	Q2 (57A)	045710	50
	3-pole	Q3 (24A)	033710	50	Q3 (32A)	033680	50	Q3 (41A)	045680	50	Q3 (57A)	045720	50
	4-pole	Q4 (24A)	033720	50	Q4 (32A)	033690	50	Q4 (41A)	045690	50	Q4 (57A)	045730	50
	10 pole	Q10 (24A)	036870	20	Q10 (32A)	036880	20	Q10 (36A)	045700	20	Q10 (57A)	045740	20
	Jumper Comb				QB25	914550	1						
Switchable cross-connection link													
VL 2					VL 2	019700	100	VL 2	019470	50	VL 2	013590	100
BS					VH	028510	50	VH	028510	50	VH	028510	50
VH					BS	029250	100	BS	029250	100	BS	029250	100
Marking tags	**Print**												
1 2 3 4 5 6	Consecutive horizontal	FW 6	046866	–	FW 6.5	046816	–	FW 8	127696	–	FW 5	047346	–
	Consecutive vertical	FS 6	046876		FS 6.5	046826	–	FS 8	128966	–	FS 5	047356	–

Disconnect terminals

TS 35 / PA

When using ATEX certified components in hazardous area applications the installation instructions and the rated data for accessories in the technical appendix must be considered.

		SAKR 4 mm²	SAKR-D 4 mm²
Width/Length/Height with TS35x7.5	mm	**6.5** x 42 x 40.5	**6.5** x 46 x 38
Max. current / max. cond. cross-section	A/mm²	**10 / 4**	**10 / 4**
Max. clamping range	mm²	**0.13 ... 4**	**0.13 ... 4**

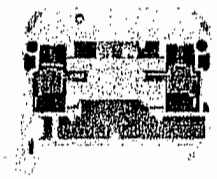

Technical data

Rated data		SAKR	SAKR-D
		IEC 60947-7-1 / VDE 0100-537	IEC 60947-7-1 / VDE 0100-537
		IEC / UL / CSA / EN 50019	IEC / UL / CSA / EN 50019
Rated voltage	V	400 / 300 / 300	250 / 300 / 300
Rated current	A	10 / 10 / 10	10 / 10 / 10
Rated cross-section	mm²	4 / AWG 26...12 / AWG 26...12	4 / AWG 26...12 / AWG 22...12
Rated impulse voltage / Pollution severity	kV/-	6 / 3	6 / 3
Plug gauge IEC 60-947-1 / flammability class acc. UL 94		A3 / V2	A3 / V2
Approvals			
Clampable conductors (H05V/H07V)		Rated connection / Additional connection	Rated connection / Additional connection
Solid / stranded	mm²	0.5...4 / 1.5...4	0.5...4 / 1.5...4
Flexible / flexible w. wire end ferrule	mm²	0.5...4 / 0.5...2.5	0.5...4 / 0.5...2.5
Tightening torque range (clamping screw)	Nm	0.5...1.0 (M 3)	0.5...1.0 (M 3)
Stripping length / blade size	mm / -	8 / 3.5 x 0.6	8 / 3.5 x 0.6
2 clampable conductors of equal cross-section			
Solid / stranded	mm²		
Flexible / flexible w. wire end ferrule	mm²		
Information		The tightening torque is 0.5-0.7 Nm for disconnect terminals with sockets.	The tightening torque with test sockets is 0.5-0.7 Nm.

Order data

Version		SAKR Type	Qty.	Order No.	SAKR-D Type	Qty.	Order No.
	beige	SAKR/35	100	0172160000	SAKRD/35	50	0185760000
	blue	SAKR/35 BL	100	0172180000			
Information		SAKR/35 2 StB order No. 0183360000					

Accessories

Cross-connection, screwable		SAKR Type	Current [A]	Qty.	Order No.	SAKR-D Type	Current [A]	Qty.	Order No.
	2-pole	QB 2 WI RA6 IS	27	50	0482700000	QB 2 WI RA6 IS	27	50	0482700000
	3-pole	QB 3 WI RA6 IS	27	50	0482800000	QB 3 WI RA6 IS	27	50	0482800000
	4-pole	QB 4 WI RA6 IS	27	50	0482900000	QB 4 WI RA6 IS	27	50	0482900000
	(Q) 10-pole								
	Connecting sleeve								
	Fixing screw								
	Fuse cartridges								
Cross-connection saddle									
	Cross-connection saddle								
	Connecting sleeve								
	Fixing screw								
Socket / Test plug									
	Socket	STB 6/D3.7/2.3/M3 SAKR		100	0379400000	STB 6/D3.7/2.3/M3 SAKR		100	0379400000
	Test plug	PS 2.3 RT		20	0180400000	PS 2.3 RT		20	0180400000
End plate			Width [mm]				Width [mm]		
	beige	AP SAKR BE	1.5	20	0211360000	AP SAKR BE	1.5	20	0211360000
	blue	AP SAKR BL	1.5	20	0211380000	AP SAKR BL	1.5	20	0211380000
Partition / Partition disc			Width [mm]				Width [mm]		
	beige								
	blue								
	Partition disc								
Cover / fixing screw (plastic)									
	Cover								
	Fixing screw (plastic)								
Marking systems		DEK 6,5				DEK 6,5			
Detailed information on all versions in chapter accessories.		DB 25 blank, see chapter accessories. To use twin ferrules ZH 0,5 to ZH 1,5 is possible.				twin ferrule ZH 0.5 to ZH 1.5 useable.			

ASK 1 / KDKS 1

25 Years old and still the most innovative and flexible fuse terminal available!

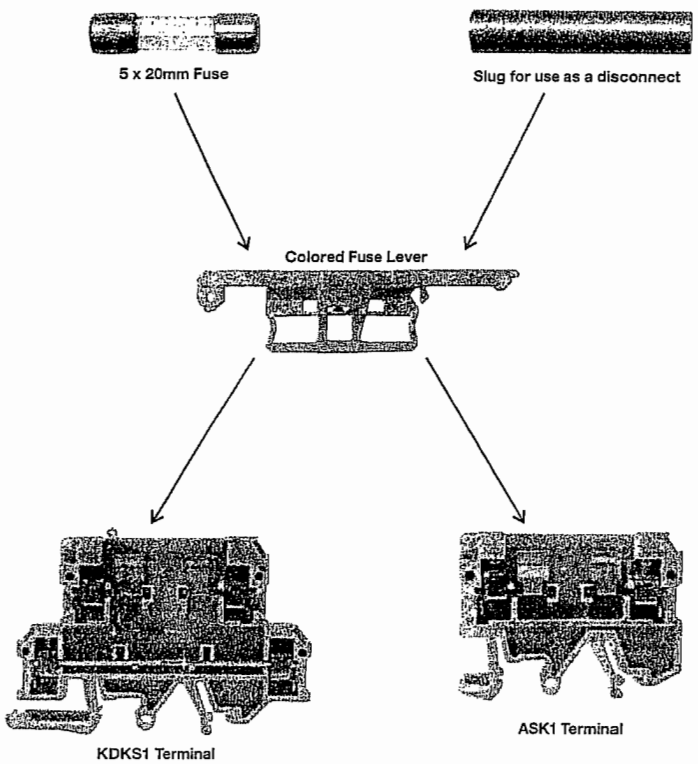

The ASK1, first introduced by Weidmuller in 1975, is the most successful fuse terminal in both the process and industrial markets. Worldwide it is also the most copied fuse terminal!

What some users may not know is that the ASK1 family is also the most flexible fuse terminal available. It can be used as a disconnect, color coded, mounted on 32mm and 35mm DIN rails, is available in UL94 V0 material, and can include connections for a return wire and shield.

One of the unique features of the versions with LED indicator is the high impedance circuit. Located in parallel with the fuse, the LED indicator is energized when the fuse fails. Since this circuit passes a current through the load in the failed state it is desirable to minimize the current level. **The ASK1 indicators have been designed to draw no more than 500µA - not mA like other indicator circuits but µA!** This makes the circuit safe and still provides an excellent visual indication of a blown fuse. If used with PLC or DCS digital input circuits the ASK1 is often the only indicating fuse terminal that will not inadvertently energize the high impedance optocoupler input circuits.

The other member of the ASK1 family is the KDKS1 which provides a feedthrough connection as well as the fuse. This accommodates both the line and neutral (or + and -) wires in a single terminal. Another version includes a connection for a shield that is grounded to the DIN rail via the terminal's mounting foot.

United States
Weidmuller Inc.
821 Southlake Blvd.
Richmond, Virginia 23236
Telephone: (800) 849-9343
Facsimile: (804) 379-2593
Email: info@weidmuller.com
Website: www.weidmuller.com

Canada
Weidmuller Ltd.
10 Spy Court
Markham, Ontario L3R 5H6
Telephone: (800) 268-4080
Facsimile: (905) 475-2798
Email: info1@weidmuller.ca
Website: www.weidmuller.ca

Weidmuller, S.A. de C.V
5 Sur No. 4311
Col. Huexotitla
72534 Puebla, Pue. Mexico
Telephone: (22) 37 2549
Facsimile: (22) 43 1981
Email: weidmull@acnet.net

Weidmuller

ASK1 and ASK1 LD

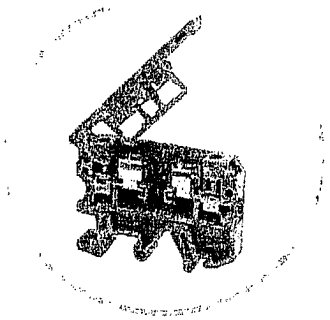

CSA 300V, 10A
8mm wide

Rated data	
without indication, UL94-V2:	047456
without indication, UL94-V0:	1750470000
with LED indication, hinge -, beige lever, UL94-V2: 24V	022276
120V	022556
230V	022576
optional end plate: UL94-V2	038036
UL94-V0	1753320000

Consult factory for other voltage and hinge + versions

KDKS1 and KDKS1 LD

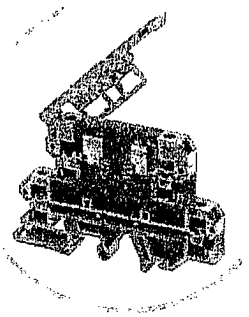

CSA 300V, 10A
8mm wide

Rated data	
without indication:	950335
without indication, UL94-V0:	953244
with LED indication (blown fuse), hinge -, beige lever, UL94-V2:	
24V	980272
120V	980276
230V	980278
with LED indication (fuse healthy), hinge +, beige lever, UL94-V2:	
24V	980273
120V	980277
optional end plate: UL94-V2	950333
UL94-V0	953247

Consult factory for other voltage and hinge + versions.
Fuse healthy indications use 3mA LED circuit.

Pull-Out Fuse/ Disconnect Holder

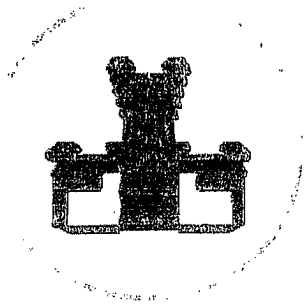

SIHA Fuse Holder to replace lever. Fuse holder can be removed for terminal to disable a circuit. Includes provision for marking tags to identify the circuit the fuse holder is associated with.

Catalog number: **159302**

KDKS1 PE

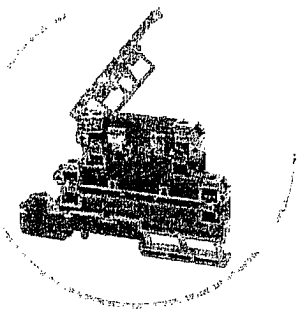

CSA 300V, 10A
8mm wide

Rated data	
without indication, UL94-V2:	952811
without indication, UL94-V0:	953245
with LED indication (blown fuse), hinge -,beige lever, UL94-V2:	
24V	915833
120V	915835
optional end plate: UL94-V2	950333
UL94-V0	953247

Consult factory for other voltage and hinge + versions

Hinged Fuse/Disconnect Levers

Colored lever	green	yellow	beige	red	blue
no indication	217550	217073	037706	212866	207038
12Vdc hinge +	990981	990982	990990	990983	990984
12Vdc hinge -	990985	990986	990991	990987	990988
24Vdc hinge +	990920	990921	990867	990922	990923
24Vdc hinge -	990916	990917	990866	990918	990919
120Vac/dc	990924	990925	990868	990926	990927
230Vac/dc	990928	990929	991649	990930	990931

All levers include provisions for marking tags.

ASK1 Terminal

- Mounts on both 32mm and 35mm DIN Rail
- 8mm wide
- Now available in Wemid material rated UL94-V0

KDKS1 Terminal

- Mounts on both 32mm and 35mm DIN Rail
- 8mm wide
- Includes feedthrough connection for neutral or common wires
- Also available with 3rd connection for ground wire/shield (TS35 mount only)
- Available with fuse healthy indicator (as shown)
- Now available in Wemid material rated UL94-V0

Schematics

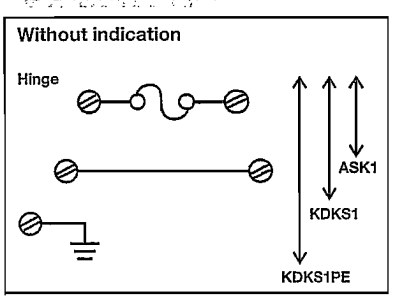

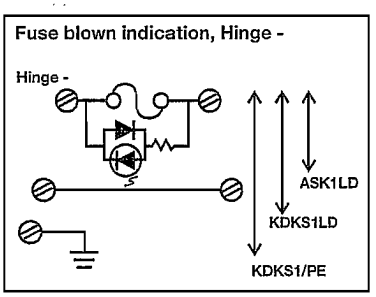

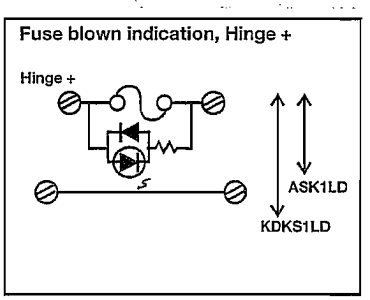

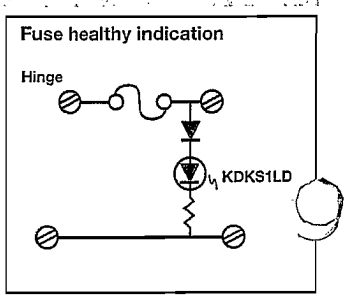

Specifications subject to change without notice. 99990209 - 05/02 Printed in Canada

1/4" x 1-1/4" Fuses

AGC Series, Fast Acting, Glass Tube

TIME CURRENT CURVE

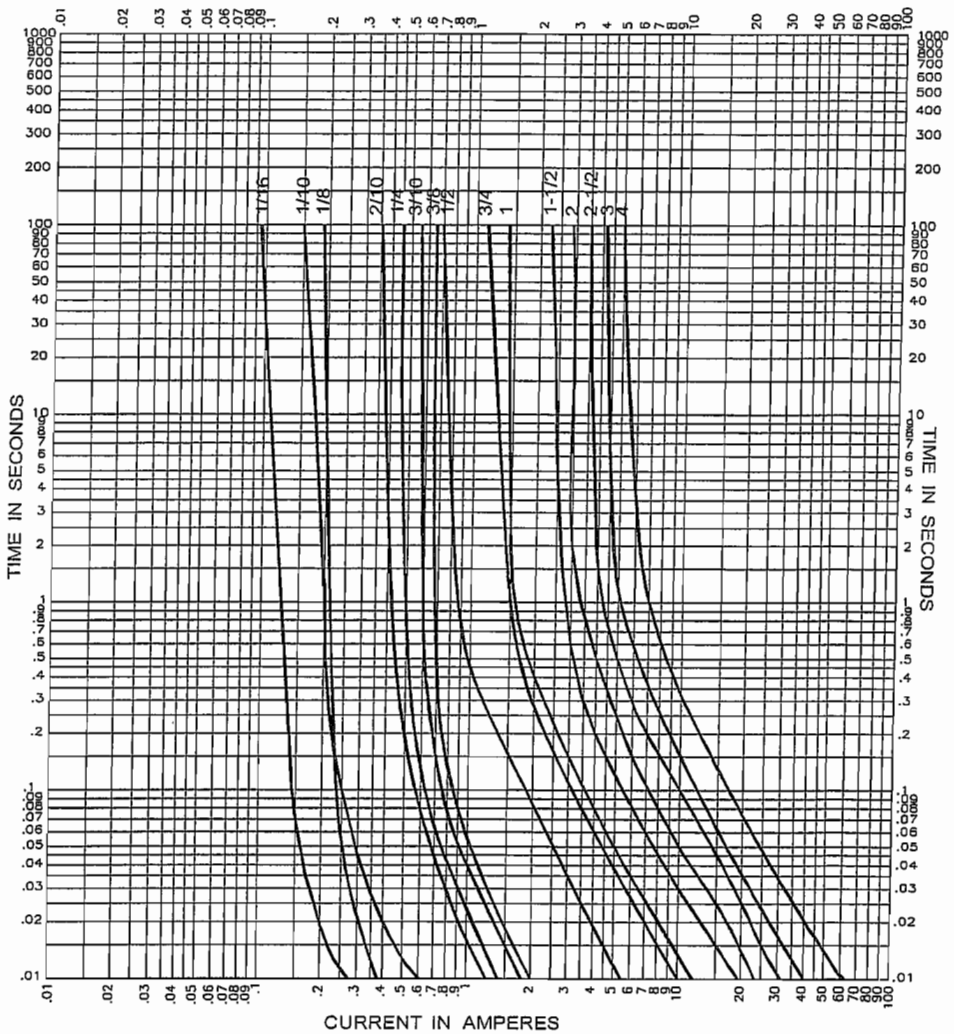

OPTION CODE	
Option Code	**Description**
B	Board Washable - Hermetically sealed to withstand aqueous cleaning
V	Axial leads - brass overcaps with copper and nickel flash, plated in tin lead

PACKAGING CODE	
Packaging Code	**Description**
BK	100 pieces of fuses packed into a cardboard carton with flaps folded
BK1	1,000 pieces of fuses packed into a cardboard carton with flaps folded
BK8	8,000 pieces of fuses packed into a cardboard carton with flaps folded

© Cooper Electronic Technologies 2002

Visit us on the Web at www.cooperET.com

3601 Quantum Boulevard Boynton Beach, Florida 33426-8638

Tel: +1-561-752-5000 Toll Free: +1-888-414-2645 Fax: +1-561-742-1178

This bulletin is intended to present product design solutions and technical information that will help the end user with design applications. Cooper Electronic Technologies reserves the right, without notice, to change design or construction of any products and to discontinue or limit distribution of any products. Cooper Electronic Technologies also reserves the right to change or update, without notice, any technical information contained in this bulletin. Once a product has been selected, it should be tested by the user in all possible applications.

BUSSMANN electronic fuses

COOPER Electronic Technologies

1/4" x 1-1/4" Fuses

AGC Series, Fast Acting, Glass Tube

Description

- Fast-acting, glass tube
- Optional leaded version available
- 1/4 x 1-1/4 (6.3mm x 32mm) physical size
- Glass tube, nickel-plated brass endcap construction
- UL Listed product meets standard 248-14

ELECTRICAL CHARACTERISTICS	
% of Amp Rating	Opening Time
100%	None
135%	60 Minutes Maximum
200%	120 Seconds Maximum

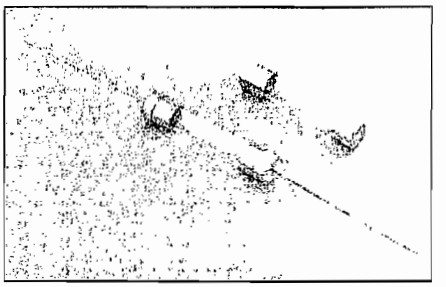

Agency Information

- UL Listed Card: AGC 1/500-10
- UL Recognition Card: AGC 11-30
- CSA Component Acceptance Card (Class No. 1422 30)
- CSA Certification Card (Class No. 1422 01)

Environmental Data

- Shock: 1/100A thru 3/4A – MIL-STD-202, Method 213, Test Condition I; 1A thru 30A – MIL-STD-202, Method 207, (HI Shock)
- Vibration: 1/100A thru 30A – MIL-STD-202, Method 204, Test Condition A (Except 5g, 500HZ)

Ordering

- Specify product code and packaging code

Dimensions (mm/in)

Drawing Not to Scale

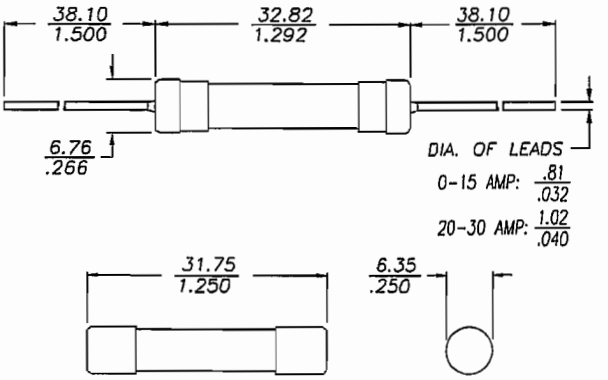

SPECIFICATIONS							
Product Code	Voltage Rating AC	AC Interrupting Rating 250V	125V	32V	Typical DC Cold Resistance** (ohms)	Typical Melting I²t† AC	Typical Voltage Drop‡
AGC-1/20	250V	35A	10000A	1000A	4.500	0.00773	0.67
AGC-1/16	250V	35A	10000A	1000A	29.000	0.000181	10.41
AGC-1/10	250V	35A	10000A	1000A	12.565	0.000787	6.00
AGC-1/8	250V	35A	10000A	1000A	6.800	0.00131	4.67
AGC-3/16	250V	35A	10000A	1000A	4.900	0.00637	4.12
AGC-2/10	250V	35A	10000A	1000A	3.360	0.00435	4.51
AGC-1/4	250V	35A	10000A	1000A	1.860	0.0148	0.89
AGC-3/10	250V	35A	10000A	1000A	1.670	0.0208	2.88
AGC-3/8	250V	35A	10000A	1000A	1.203	0.0321	4.59
AGC-1/2	250V	35A	10000A	1000A	0.615	0.269	0.59
AGC-3/4	250V	35A	10000A	1000A	0.312	0.815	0.37
AGC-1	250V	35A	10000A	1000A	0.190	1.615	0.31
AGC-1-1/4	250V	100A	10000A	1000A	0.145	0.018	0.35
AGC-1-1/2	250V	100A	10000A	1000A	0.115	0.0149	0.27
AGC-2	250V	100A	10000A	1000A	0.078	0.00509	0.28
AGC-2-1/4	250V	100A	10000A	1000A	0.067	0.00588	0.26
AGC-2-1/2	250V	100A	10000A	1000A	0.057	0.00879	0.31
AGC-3	250V	100A	10000A	1000A	0.045	0.0167	0.25
AGC-4	250V	200A	10000A	1000A	0.030	0.0305	0.22
AGC-5	250V	200A	10000A	1000A	0.024	0.045	0.23
AGC-6	250V	200A	10000A	1000A	0.020	0.071	0.23
AGC-7	250V	200A	10000A	1000A	0.017	0.105	0.23
AGC-8	250V	200A	10000A	1000A	0.014	0.152	0.19
AGC-9	250V	200A	10000A	1000A	0.012	0.21	0.18
AGC-10	250V	200A	10000A	1000A	0.008	0.492	0.20
AGC-15	32V	-	-	1000A	0.006	0.566	0.14
AGC-20	32V	-	-	1000A	0.004	1.438	0.12
AGC-25	32V	-	-	1000A	0.003	2.109	0.11
AGC-30	32V	-	-	1000A	0.002	3.807	0.12

** DC Cold Resistance (Measured at ≤10% of rated current)
† Typical Melting I²t (A²Sec) (I²t was measured at listed interrupting rating and rated voltage.)
‡ Typical Voltage Drop (Voltage drop was measured at 25°C ambient temperature at rated current)

GFCI Personnel Protection Devices

LEVITON
Building a Connected World

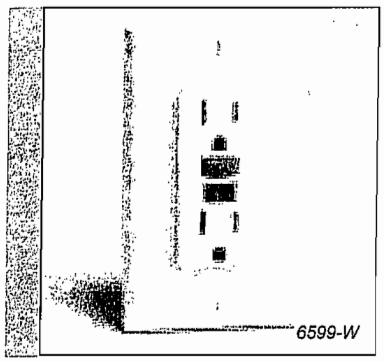
6599-W

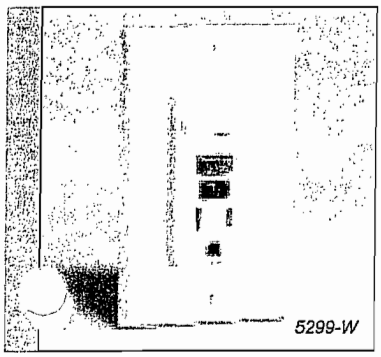
5299-W

Hospital Grade GFCI Receptacles — Back and Side Wired

15 AMP 125V at Receptacle; 20 AMP 125V Feed-Through

DESCRIPTION	CAT. NO.	COLOR* Basic Cat. No. Denotes Brown	NEMA CONFIG.
Duplex Receptacle with LED Indicator Light	6598-HG	I, W, GY, R	5-15R

20 AMP 125V at Receptacle and Feed-Through

DESCRIPTION	CAT. NO.	COLOR* Basic Cat. No. Denotes Brown	NEMA CONFIG.
Duplex Receptacle with LED Indicator Light	6898-HG	I, W, GY, R	5-20R

Commercial Grade GFCI Receptacles — Back and Side Wired

15 AMP 125V at Receptacle; 20 AMP 125V Feed-Through

DESCRIPTION	CAT. NO.	COLOR* Basic Cat. No. Denotes Brown	NEMA CONFIG.
No Indicator Light	6599	I, W, GY, E, A	5-15R
Duplex Receptacle with LED Indicator Light	6598	I, W	
With 4½" Leads★	6599-L	I, W	
Buttons match face color	6599-A	I, W, A	

20 AMP 125V at Receptacle and Feed-Through

DESCRIPTION	CAT. NO.	COLOR* Basic Cat. No. Denotes Brown	NEMA CONFIG.
No Indicator Light	6899	I, W, GY	5-20R
Duplex Receptacle with LED Indicator Light	6898	I, W	
Buttons match face color	6899-A	I, W, A	

Switch-Rated GFCI - Back and Side Wired 20 AMP 125V Switch-Rated; Switch Rating 1.5 HP @ 120V

DESCRIPTION	CAT. NO.	COLOR* Basic Cat. No. Denotes Brown
Blank Face GFCI, No Indicator Light	6490	I, W, E

Combination Switch GFCI Outlet — Side Wired

Switch 1000W 125V AC; Outlet 15 AMP 125V; Feed-Through 20AMP 125V

DESCRIPTION	CAT. NO.	COLOR* Basic Cat. No. Denotes Brown
Single-Pole Switch & GFCI Protected Outlet	5299	I, W

All devices are UL Listed. Also CSA Certified except where indicated by★

SPECIFICATIONS & FEATURES

Receptacles

- Trip threshold meets or exceeds UL requirements for tripping time
- Impact-resistant thermoplastic cover and body
- Silver alloy contacts
- Compatible with all Decora devices; supplied with Decora wallplate; available in selected Decora colors
- Terminals accept up to No.12 solid or stranded wire.

Combination Switch/GFCI

- Ideal for kitchens, bathrooms, modular kitchen units, bathroom cabinet fixtures, lamp cabinet fixtures and applications where combination devices are used.

TESTING & CODE COMPLIANCE

- UL Standard 943 Class A (GFCI) and 498 (receptacles)
- UL Listed (File #48380)
- Meets ANSI C73, NEMA WD-1 requirements for duplex receptacles
- CSA Certified (LR-57811)
- Backed by a Limited Two-Year Warranty

***COLOR**

Basic Cat. Nos. shown above denote Brown color. For other color selections, add the suffix to catalog number as follows: Ivory (-I), White (-W), Gray (-GY), Red (-R), Black (-E), Almond (-A).

MATERIAL CHARACTERISTICS

Flammability: Rated V2

Operating Temperature: -30°F (-35°C) to 151°F (66°C)

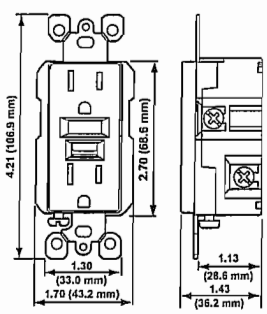

COMMERCIAL GRADE GFCI RECEPTACLE
Cat No. 6599

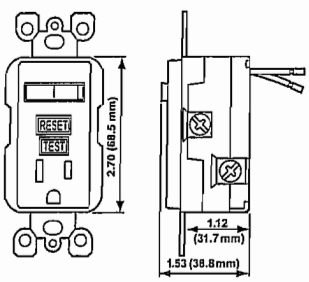

COMBINATION SWITCH GFCI OUTLET
Cat No. 5299

To learn more about Leviton's outstanding offering of devices visit our Website at: www.leviton.com ....*Building a Connected World*

Components for User Assembly ZB4B:

1 - Electrical Bodies (pre-assembled)
2 - Operator Heads (pre-assembled)

Component Parts and Accessories ZB:

3 - Mounting Collar – Standard (ZB4BZ009)
4 - Contact Blocks – Screw Clamp Terminal (ZBE10•, ZBE20•)
5 - Light Modules – Screw Clamp Terminal (ZBV•) for Protected LED and Ba9 Base Lamps
6 - Contact Blocks – Plug-in Connector (ZBE10•)
7 - Light Modules – Plug-in Connector (ZBV•) for Protected LED only
8 - 2 Pin Connector and Cables for Plug-in Connection Electrical Components (APE1•)
9 - Printed Circuit Board (PCB) Application (Typical)
10 - Mounting Collar – PCB Application (ZB4BZ009 + ZB4BZ079)
11 - Contact Blocks – PCB Application (ZBE70•, ZBE70•6)
12 - Light Modules – PCB Application (ZBV•7) for Protected LED only
13 - Legend Plates and Holders (ZBY•, ZBZ•)
14 - Operator Head (Illuminated or Non-Illuminated)
15 - Lenses for Pilot Lights (ZBV•) or Lenses for Illuminated Push Buttons (ZBW•)
16 - Labeling Software

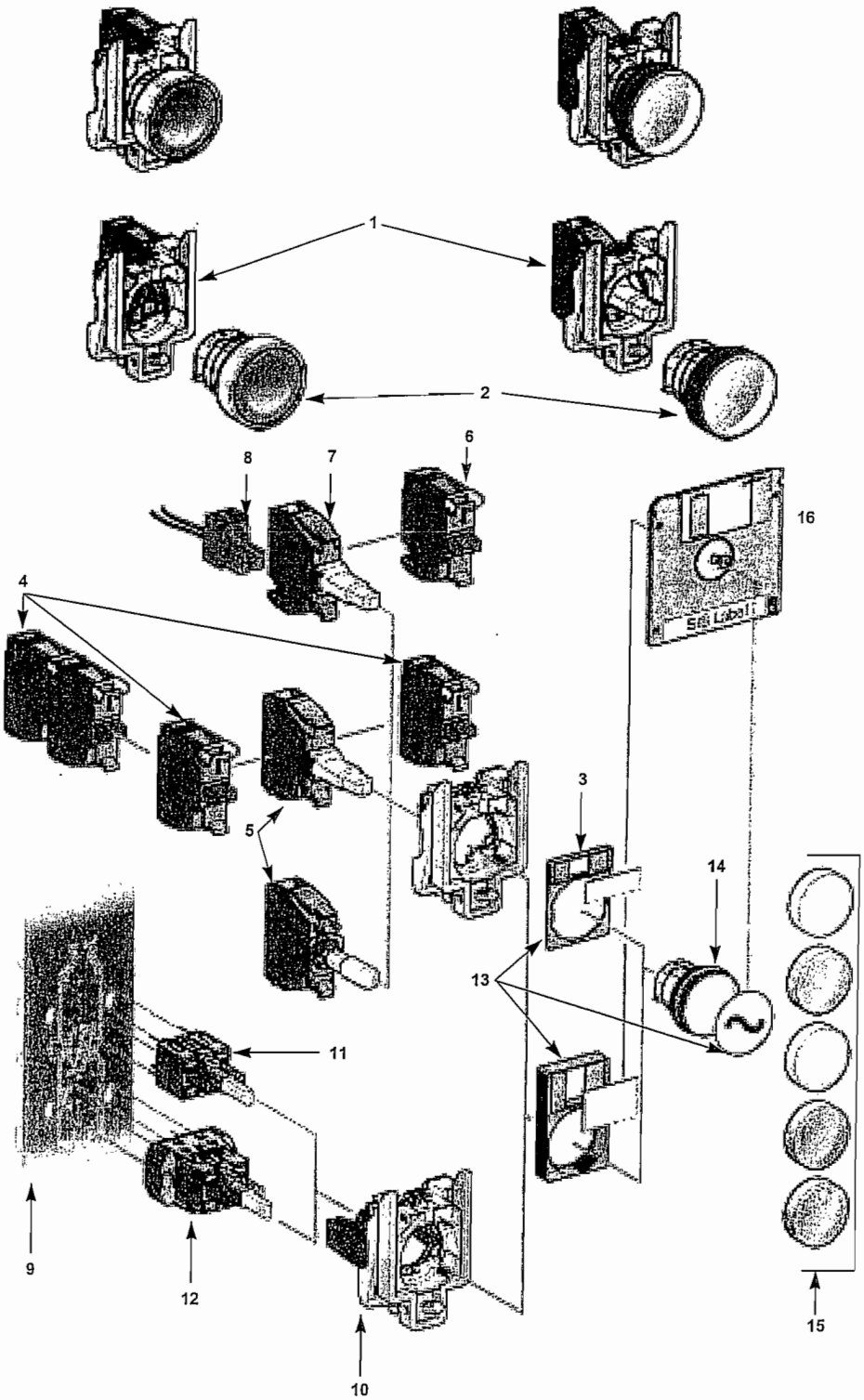

© 1999 Square D All Rights Reserved

Environment

Protective treatment standard version		"TH"
Ambient air temperature around the device	Storage	-40 to +158 °F (- 40 to +70 °C)
	Operation	-13 to +158 °F (- 25 to +70 °C) unless otherwise stated
Electric shock protection	Conforming to IEC 536	Class I
Degree of protection	Conforming to IEC 529	IP 65, unless otherwise stated IP 66, for booted push button heads
	Conforming to UL 50 and CSA C22.2 No. 94	Type 1, 2, 3, 4, 4X, 12, and 13, unless otherwise stated
Resistance to high pressure cleaner		1,015 psi (70 x 105 Pa-70 bars); distance: 3.94 in (0.1 m) Temperature: 131 °F (55 °C)
Mechanical shock protection	Conforming to EN 50102	Non illuminated heads: IK 03
		Illuminated heads: IK 05
Conforming to standards	CE Marked	IEC 947-1, IEC/EN 60947-5-1, IEC 947-5-4, EN 60947-1, JIS C 4520, UL 508, CSA C22.2 No. 14
Product certifications	UL Listed, CSA File E164353 CCN NKCR, File LR 44087 Class 3211 03, File E164353 CCN NKCR 2	Standard single contacts with screw clamp terminals: A600; Q600 Double contacts with screw clamp terminals: A600; Q600 Light modules with screw clamp terminals JOYSTICK XD4-PA: A600; R300
	UL Recognized, CSA	Standard single contacts for plug-in connector: A300; R300 Standard single contact for printed circuit board: B300; R300
	BV, RINA, LROS, DNV, GL (pending)	Standard single contacts and double contacts with screw clamp terminals
Terminal identification	Conforming to EN 50005 and EN 50013	

Characteristics of Operators and Contact Blocks

Mechanical Characteristics

Contact operation	N/C or N/O or N/O		Slow break
Positive operation	Conforming to IEC/EN 60947-5-1 Appendix K		All functions incorporating a N/C contact are positive opening operation
Operating travel (to change electrical state)	Push button		Changing N/C state: 0.06 in (1.5 mm) Changing N/O state: 0.11 in (2.6 mm) Total travel: 0.17 in (4.3 mm)
Operating force	Push button		Changing N/C state: 0.79 lbf (3.5 N) Changing N/O state: 0.85 lbf (3.8 N)
	Additional contact (extra to change state)		Single N/C contact: 0.45 lbf (2 N) Single N/O contact: 0.52 lbf (2.3 N)
			Double contact N/C: 0.76 lbf (3.4 N) Double contact N/O: 1.12 lbf (5 N) Double contact N/C + N/O: 1.03 lbf (4.6 N)
	Emergency stop with N/C + N/O Maintained mushroom head operators Momentary mushroom head operators		Standard push-pull: 10.12 lbf (45 N) Trigger action push-pull: 11.24 lbf (50 N)
			Standard turn to release and key release: 8.99 lbf (40 N) Trigger action turn to release and key release: 9.89 lbf (44 N)
Operating torque (to change electrical state)	Selector switches		N/O contact: 1.24 lb-in (0.14 N•m)
	Additional contact (extra)		N/O contact: 0.44 lb-in (0.05 N•m)
Mechanical durability (operating cycles)	Push button	Momentary	5 million
		Double-headed	1 million
		Push-push to release	500,000
	Selector switches	Non-illuminated	3 million
		Illuminated	1 million
	Toggle switches		500,000
	Emergency stop push button		300,000
	Joystick		1 million
	Standard blocks		5 million
	Low power switching power blocks		500,000
Vibration resistance	Conforming to IEC 68-2-6		Frequency (2 to 500 Hz): 5 gn
Shock resistance	Conforming to IEC 68-2-27		All functions except mushroom head push buttons– Half sine wave acceleration 11 ms: 50 gn Half sine wave acceleration 18 ms: 30 gn
			Mushroom head push buttons– Half sine wave acceleration 11 ms: 10 gn

© 1999 Square D All Rights Reserved

Electrical Characteristics		
Cabling capacity	Conforming to IEC 947-1	Screw and captive clamp terminals Min: 1 x 24 AWG (0.22 mm²) without cable end 1 x 22 AWG (0.34 mm²) for linking Max: 2 x 16 AWG (1.5 mm²) with cable end Cross headed screw (Pozidrive type 1) slotted for flat 4 and 5.5 mm screwdriver
Contact material	Silver alloy (Ag/Ni)	Standard single and double blocks with screw clamp terminals Blocks for plug-in connector Standard blocks for printed circuit board connection
	Gold flashed (Ag/Ni/Au)	Low power switching contact blocks with screw clamp terminals Low power switching contact blocks for printed circuit board connection
Short-circuit protection	Conforming to IEC/EN 60947-5-1	Standard blocks with screw clamp terminals: 10 A (gG cartridge fuse conforming to IEC 269-1) Blocks for plug-in connector: 4 A (gG fuse cartridge conforming to IEC 269-1) Standard blocks for printed circuit board connection: 4 A (gG cartridge fuse conforming to IEC 269-1)
Rated insulation voltage	Conforming to IEC 947-1	Standard blocks (single or double) with screw clamp terminals: Ui = 600 V, degree of pollution 3 Blocks for plug-in connector: Ui = 250 V, degree of pollution 3 Standard blocks for printed circuit board connection: Ui = 250 V, degree of pollution 3
Rated impluse withstand voltage	Conforming to IEC 947-1	Standard block (single or double) with screw clamp terminals: Uimp = 6 kV Blocks for plug-in connector: Uimp = 4 kV Standard blocks for printed circuit board connection: Uimp = 4 kV
Rated operational characteristics Conforming to IEC/EN 60947-5-1	AC supply: Utilization category AC-15	Standard blocks (single or double) with screw clamp terminals: A600: Ue = 600 Vac and Ie = 1.2 A or Ue = 240 Vac and Ie = 3 A or Ue = 120 Vac and Ie = 6 A Blocks for plug-in connector: A300: Ue = 120 Vac and Ie = 6 A or Ue = 240 Vac and Ie = 3 A Standard blocks for printed circuit board connection: B300: Ue = 120 Vac and Ie = 3 A or Ue = 240 Vac and Ie = 1.5 A
	DC supply: Utilization category DC-13	Standard single or double blocks with screw clamp terminals: Q600: Ue = 600 Vdc and Ie = 0.1 A or Ue = 250 Vdc and Ie = 0.27 A or Ue = 125 Vdc and Ie = 0.55 A Joystick XD4-PA: R300: Ue = 125 Vdc and Ie = 0.22 A or Ue = 250 Vdc and Ie = 0.1 A Blocks for plug-in connector: R300: Ue = 125 Vdc and Ie = 0.22 A or Ue = 250 Vdc and Ie = 0.1 A Standard blocks for printed circuit board connection: R300: Ue = 125 Vdc and Ie = 0.22 A or Ue = 250 Vdc and Ie = 0.1 A
Rated operational characteristics	AC supply: Resistive load	Low power switching contact blocks with screw clamp terminals or for printed circuit board connection: Max: 24 V Max: 0.1 A
Electrical durability Conforming to IEC/EN 60947-5-1 Appendix C Operating rate 3600 operating cycles/hour. Load factor: 0.5	AC supply for 1 million operating cycles, utilization category AC-15	Standard blocks for screw clamp terminals:
		24 Vac / 120 Vac / 230 Vac
		4 A / 3 A / 2 A
		Standard double blocks with screw clamp terminal or plug-in connector:
		24 Vac / 120 Vac / 230 Vac
		3 A / 1.5 A / 1 A
	DC supply for 1 million operating cycles, utilization category DC-13	Standard single blocks for screw clamp terminals:
		24 Vdc / 110 Vdc
		0.5 A / 0.2 A
		Standard double blocks with screw clamp terminal or plug-in connector:
		24 Vdc / 110 Vdc
		0.4 A / 0.15 A
Electrical reliability	Failure rate Conforming to IEC 947-5-4	
	- In clean environment	Standard blocks: - at 17 V and 5 mA, $\lambda < 10^{-8}$ - at 5 V and 1 mA, $\lambda < 10^{-6}$ Low power switching contact blocks: - at 5 V and 1 mA, $\lambda < 10^{-8}$
	- In dusty environment	Low power switching contact blocks only: at 5 V and 1 mA, $\lambda < 10^{-6}$

© 1999 Square D All Rights Reserved

Characteristics of Light Modules

Mechanical Characteristics		
Vibration resistance	Conforming to IEC 68-2-6	Frequency (12 to 500 Hz): 5 gn
Shock resistance	Conforming to IEC 68-2-27	Half sine wave acceleration 11 ms: 50 gn Half sine wave acceleration 18 ms: 30 gn
Electrical Characteristics		
Cabling capacity	Conforming to IEC 947-1	Screw and captive clamp terminals Min: 1 x 24 AWG (0.22 mm^2) without cable end 1 x 22 AWG (0.34 mm^2) for linking Max: 2 x 16 AWG (1.5 mm^2) with cable end
Rated insulation voltage	Conforming to IEC 947-1	Direct supply pilot light modules (BA 9s bulbs): Ui = 250 V, degree of pollution 3 Pilot light modules with protected LED: Ui = 250 V, degree of pollution 3 Pilot light modules with transformer: Ui = 600 V, degree of pollution 3
Rated impluse withstand voltage	Conforming to IEC 947-1	Direct supply pilot light modules (BA 9s bulbs): Uimp = 4 kV Pilot light modules with protected LED: Uimp = 4 kV Pilot light modules with transformer: Uimp = 6 kV

Specific Characteristics of Protected LED Light Modules Only

Voltage limits	Nominal voltage	24 V: 19.2 to 30 Vdc; 21.6 to 24.6 Vac
Current consumption	Applicable to all colors	24 Vac/Vdc supply blocks: 18 mA 120 Vac supply blocks: 14 mA 240 Vac supply blocks: 14 mA
Service life	At nominal voltage and at an ambient temperature of 77 °F (25 °C)	100,000 hours
Surge withstand	Conforming to IEC 1000-4-5	2/1 kV
Resistance to fast transients	Conforming to IEC 1000-4-4	2 kV
Resistance to electromagnetic fields	Conforming to IEC 1000-4-3	10 V/m
Resistance to electrostatic discharges	Conforming to IEC 1000-4-2	8/6 kV
Electromagnetic emission	Conforming to EN 55011	Class B

© 1999 Square D All Rights Reserved

Pilot Light Heads

ZB4BV063

ZB4BV04

Shape of Head	For Use with Body Comprising Light Module Type	Color of Lens	Catalog Number
	Protected LED only	White	ZB4BV013
		Green	ZB4BV033
		Red	ZB4BV043
		Yellow	ZB4BV053
		Blue	ZB4BV063
	For BA 9s incandescent bulb, neon or LED only	White	ZB4BV01
		Green	ZB4BV03
		Red	ZB4BV04
		Yellow	ZB4BV05
		Blue	ZB4BV06
		Clear	ZB4BV07

Complete Bodies (Mounting Collar + Light Module for BA 9s Incandescent Bulb, Neon or LED)

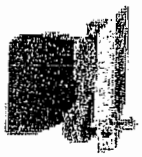

ZB4BV6

Description	Light Source	Supply Voltage (V)	Catalog Number
Screw clamp terminal connections			
Direct supply	BA 9s bulb 2.4 W max. Not included ●	≤ 250	ZB4BV6
Transformer type 1.2 VA, 6 V secondary	BA 9s incandescent bulb included	110-120 Vac 50/60 Hz	ZB4BV3
		230-240 Vac 50/60 Hz	ZB4BV4
		400-50 Hz	ZB4BV5
		440-480 Vac 60 Hz	ZB4BV8
		550-600 Vac 60 Hz	ZB4BV9

● Bulb to be ordered separately, see page 60.

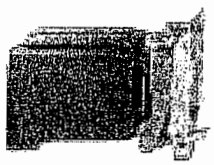

ZB4BV•

Complete Bodies (Mounting Collar + Light Module with Protected LED)

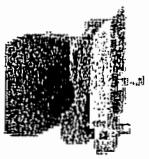

ZB4BV••

Light Source	Supply Voltage	Color of Light Source	Catalog Number
Screw clamp terminal connections			
Protected LED	24 Vac or Vdc	White	ZB4BVB1
		Green	ZB4BVB3
		Red	ZB4BVB4
		Yellow	ZB4BVB5
		Blue	ZB4BVB6
	110-120 Vac	White	ZB4BVG1
		Green	ZB4BVG3
		Red	ZB4BVG4
		Yellow	ZB4BVG5
		Blue	ZB4BVG6

© 1999 Square D All Rights Reserved

ZB4BS834

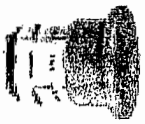

ZB4BT4

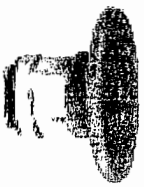

ZB4BS64

ZB4BS74

ZBY9330

Mushroom Heads for Maintained Push Buttons

Shape of Head	Type of Push	Diameter of Head	Color	Catalog Number
	Trigger action Push-pull ▲	40 mm	Red	ZB4BT84
	Trigger action Turn to release ▲	30 mm	Red	ZB4BS834
		40 mm	Red	ZB4BS844
	Trigger action Key release (No. 455) ▲	30 mm	Red	ZB4BS934
		40 mm	Red	ZB4BS944 ■
		60 mm	Red	ZB4BS964
	Push-pull	40 mm	Black	ZB4BT2
			Red	ZB4BT4
		60 mm	Black	ZB4BX2
			Red	ZB4BX4
	Turn to release	30 mm	Black	ZB4BS42
			Red	ZB4BS44
		40 mm	Black	ZB4BS52
			Red	ZB4BS54
			Yellow	ZB4BS55
		60 mm	Black	ZB4BS62
			Red	ZB4BS64
	Key release (No. 455)	30 mm	Black	ZB4BS72
			Red	ZB4BS74
		40 mm	Black	ZB4BS12
			Red	ZB4BS14 ■
		60 mm	Black	ZB4BS22
			Red	ZB4BS24

■ Other key numbers:
- key No. 421E: add the suffix 12 to the reference.
- key No. 458A: add the suffix 10 to the reference.
- key No. 520E: add the suffix 14 to the reference.
- key No. 3131A: add the suffix 20 to the reference.

Example:
The reference for a Ø 40 mm red mushroom head for a trigger action, maintained push button, with release by key No. 421E becomes: ZB4BS94412.

▲ Maximum number of contact blocks fitted to associated body: 4.

Circular Legends for Emergency Stop Mushroom Heads (yellow background)

Diameter	Text	Catalog Number
60 mm	Blank	ZBY9101
	EMERGENCY STOP	ZBY9330
90 mm	Blank	ZBY8101
	EMERGENCY STOP	ZBY8330

© 1999 Square D All Rights Reserved

ZB4BZ101

ZB4BZ102

ZBE101

ZBE102

ZBE203

ZBE204

ZB4BZ009

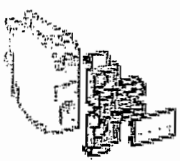
ZBZ001

Contact Blocks (Mounting Base with Contact Blocks)

Description	Type of Contact		Catalog Number
	N/O	N/C	
Screw clamp terminal connections	1	–	ZB4BZ101
	–	1	ZB4BZ102
	2	–	ZB4BZ103
	–	2	ZB4BZ104
	1	1	ZB4BZ105
	1	2	ZB4BZ141

Add-On Contact Block (with screw clamp terminal connections) ■

Description	Type of Contact		Catalog Number
	N/O	N/C	
Standard single contact blocks	1	–	ZBE101
	–	1	ZBE102
Standard double contact blocks	2	–	ZBE203
	–	2	ZBE204
	1	1	ZBE205
Special contact blocks (for low power switching and dust protected) ▲	1	–	ZBE1016
	–	1	ZBE1026

Body/Mounting Collar

For use with	Catalog Number
Electrical block (contact or light module)	ZB4BZ009

Clip-on Legend Holders for Electrical Blocks (Contact Blocks and Light Modules)
(with screw clamp terminal connections)

Identification of an XB4B control or signalling unit	ZBZ001

■ The contact blocks enable variable composition of body sub-assemblies and can be stacked to 3 rows, either: 3 rows of 3 single contacts or 1 row of 3 double contacts + 1 row of 3 single contacts (double contact blocks occupy 2 rows).

▲ Cannot stack additional contact blocks onto these blocks.

© 1999 Square D All Rights Reserved

General Accessories
Lighting Packages

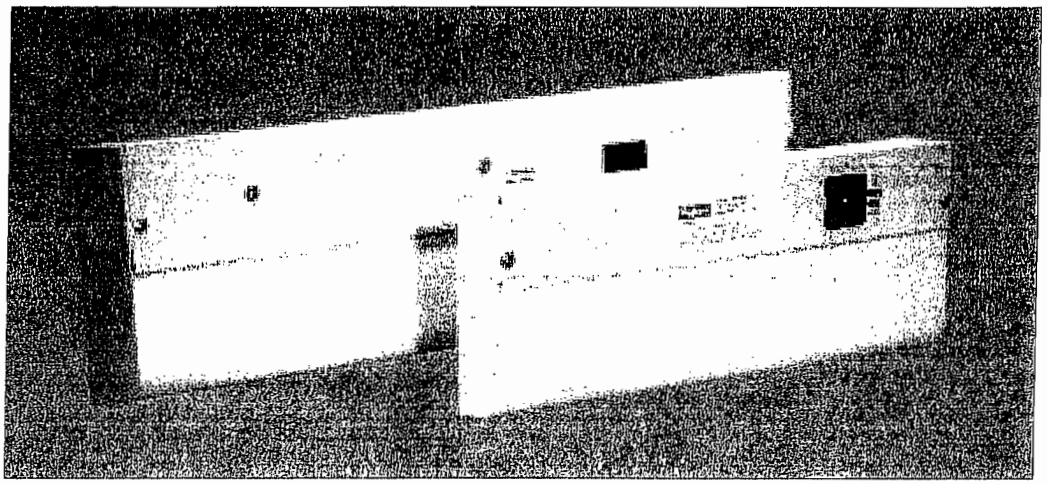

Fluorescent Lighting Package

Light packages are designed to illuminate the interior of medium to large size electrical enclosures and cabinets. These low profile light packages are available with either a manual switch or a door activated switch with plunger, integrally mounted. On door-activated switches, the circuit is closed (activates the light) when the enclosure door is opened. Each light comes with a pre-wired terminal block for easy connection to electric supply, in either 115 volt or 230 volt models. An easy to remove, non-yellowing white plastic lens cover provides protection against bulb breakage (fluorescent bulb not included). All 115 volt models come standard with a 9 amp convenience outlet.

Optional accessories include a mounting bracket kit designed specifically for Hoffman PROLINE® disconnect enclosure applications and easy to mount "remote" manual and door activated switches with mounting bracket.

See Page 12.18 for Disconnect Mounting Bracket and Remote Switch kits.

Construction

- Low profile design
- Painted steel body
- Integrally mounted switch (manual or door depending on model)
- Terminal block for easy wiring
- Standard mounting hardware and brackets included (can be panel mounted)
- Non-yellowing lens cover
- Convenience outlet on 120 volt models
- Accept the following standard bulbs, which are not included with light package: F8T5, F15T8, F18T8, or F40T12

Finish

Light gray RAL 7035 polyester powder paint on body.

Industry Standards

UL 508A, 508 Listed File No. E229434
cUL C22.2 No. 14 File No. E229434
Maintains UL/cUL Type 4 and Type 12 when properly installed in a Hoffman enclosure

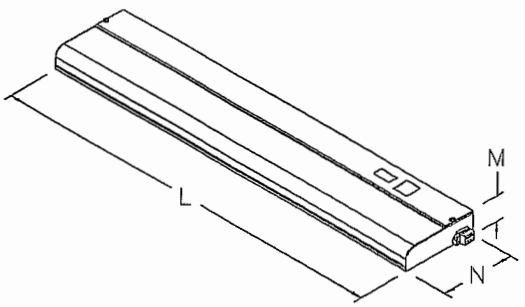

87574478

Standard Sizes Fluorescent Light Packages

Catalog Number	Description	VAC	Hz	Amps	Convenience Outlet	L in.	L mm	M in.	M mm	N in.	N mm
ALF16D12R	Door switch	115	60	0.16	Yes	12.30	(312)	1.38	42	4.59	140
ALF16M12R	Manual switch	115	60	0.16	Yes	12.30	(312)	1.38	42	4.59	140
ALF16D18R	Door switch	115	60	0.35	Yes	18.10	(460)	1.38	42	4.59	140
ALF16M18R	Manual switch	115	60	0.35	Yes	18.10	(460)	1.38	42	4.59	140
ALF16M18RC[a]	Manual switch, 6 ft power cord	115	60	0.35	Yes	18.10	(460)	1.38	42	4.59	140
ALF25D18R	Door switch	230	50	0.30	No	18.10	(460)	1.84	56	5.25	160
ALF25M18R	Manual switch	230	50	0.30	No	18.10	(460)	1.84	56	5.25	160
ALF16D24R	Door switch	115	60	0.35	Yes	24.10	(612)	1.38	42	4.59	140
ALF16M24R	Manual switch	115	60	0.35	Yes	24.10	(612)	1.38	42	4.59	140
ALF16M48R	Manual switch	115	60	0.65	Yes	48.00	(1219)	1.84	56	5.25	160

Millimeter dimensions ( ) are for reference only; do not convert metric dimensions to inch.
[a] Corded light is listed to UL/cUL 153 standard.

©2003 Hoffman Enclosures Inc.

Mounting Bracket Kit for Fluorescent Light Package

Kit simplifies mounting light package in Hoffman PROLINE® disconnect enclosures. Includes brackets, all mounting hardware, and complete instructions.

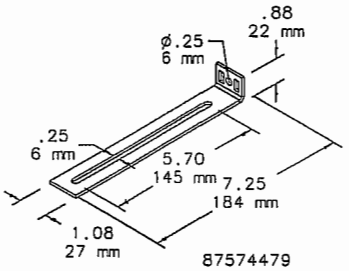

Catalog Number	Description
PDLFBRKT	Mounting Bracket Kit

Remote Switches for Fluorescent Light Package

Remote switches for these light packages.

Door-Activated Switch

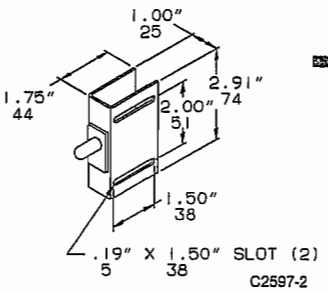

Manual Switch

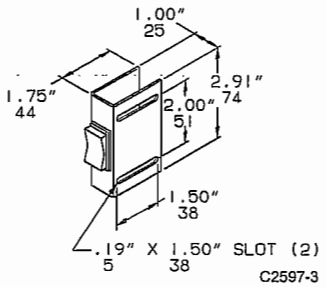

Catalog Number	Description
ALFSWM	Manual switch
ALFSWD	Door-activated switch

Epoxy Patch Kit

Applications include sealing rivets, bolts, metal joints, seams and welds, cement cracks, pipe couplings, joints, and tees. Each kit has two tubes of material, application instructions, and a mixing stick. When the resin and hardener are mixed, a gray epoxy is formed which cures at room temperature, has high adhesion, and will not sag. It is resistant to oils, acids, and chemicals.

Catalog Number
A307

 ©2003 Hoffman Enclosures Inc.