SHEET: COW-A1 (05/2005)

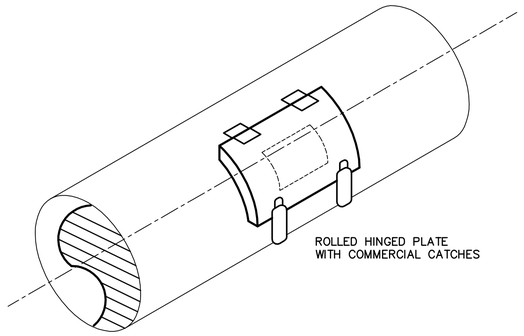

1 / – ACCESS DOOR – ROUND DUCT
N.T.S.

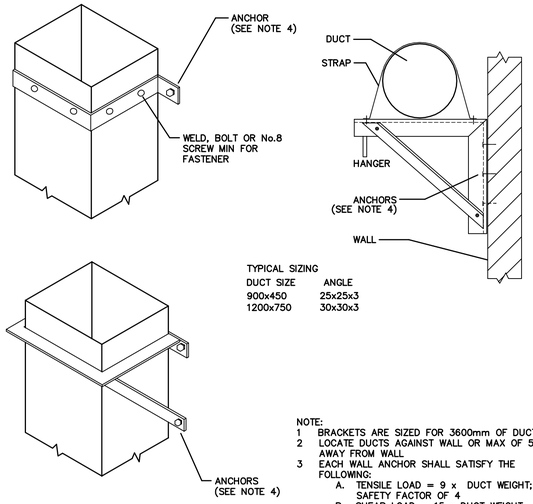

TYPICAL SIZING

DUCT SIZE	ANGLE
900x450	25x25x3
1200x750	30x30x3

NOTE:
1 BRACKETS ARE SIZED FOR 3600mm OF DUCT MAX
2 LOCATE DUCTS AGAINST WALL OR MAX OF 50mm AWAY FROM WALL
3 EACH WALL ANCHOR SHALL SATISFY THE FOLLOWING:
A. TENSILE LOAD = 9 x DUCT WEIGHT; SAFETY FACTOR OF 4
B. SHEAR LOAD = 15 x DUCT WEIGHT; SAFETY FACTOR OF 4
4 SECURE WITH APPROVED ANCHORS TO MATCH WALL CONSTRUCTION

2 / – DUCT SUPPORTS FROM WALL DETAIL
N.T.S.

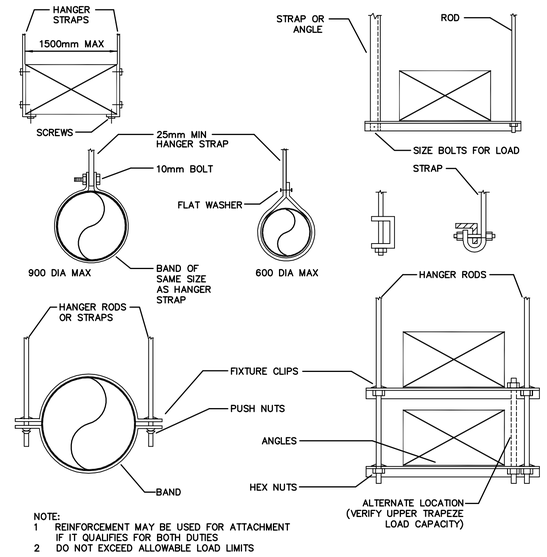

NOTE:
1 REINFORCEMENT MAY BE USED FOR ATTACHMENT IF IT QUALIFIES FOR BOTH DUTIES
2 DO NOT EXCEED ALLOWABLE LOAD LIMITS

3 / – LOWER HANGER ATTACHMENTS DETAIL
N.T.S.

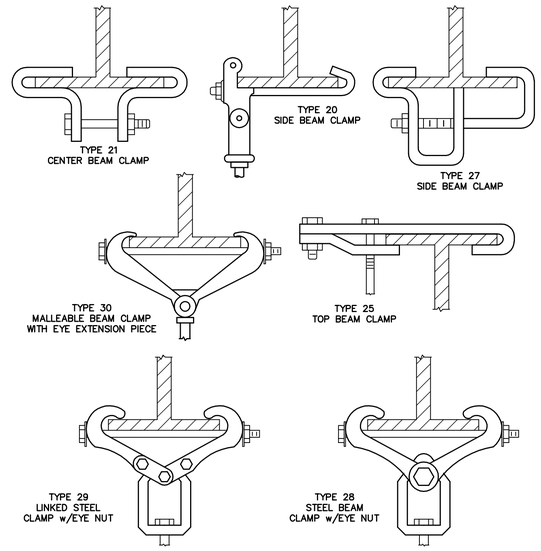

4 / – BEAM CLAMPS DETAIL
N.T.S.

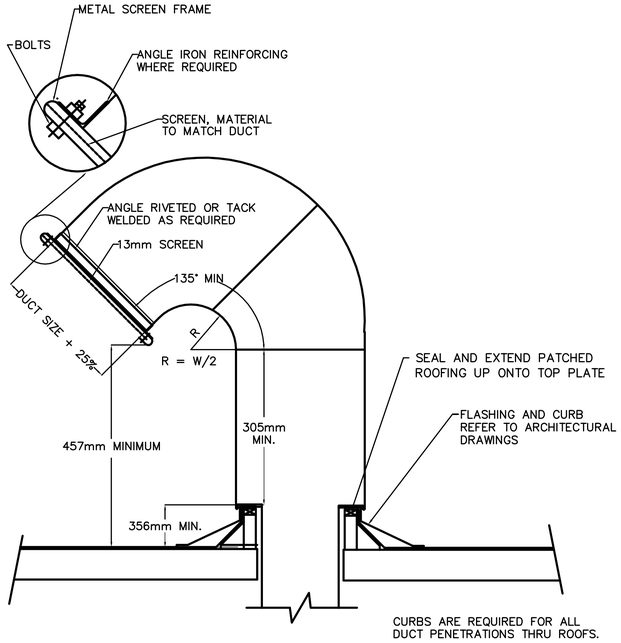

5 / – TYPICAL GOOSENECK DETAIL
N.T.S.

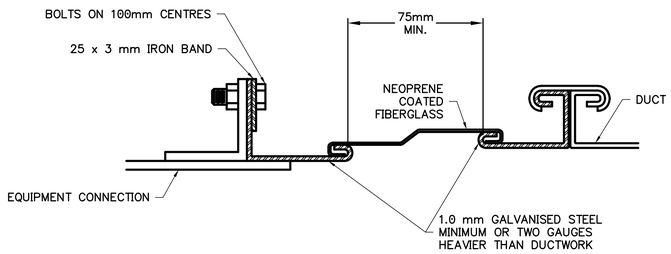

6 / – FLEXIBLE DUCT FAN CONNECTION DETAIL
N.T.S.

APEGM
Certificate of Authorization
Earth Tech Canada Inc.
No. 730 Expiry: April 30, 2007

B.M.
ELEV.

NO.	REVISIONS	DATE	BY
00	ISSUED FOR TENDER	07/01/31	LJW

CH2MHILL
Frederickson Cooper ARCHITECTS
EarthTech A Tyco International Ltd. Company

DESIGNED BY		CHECKED BY	PVL/AMA
DRAWN BY	LJW	APPROVED BY	AHL
SCALE:	N.T.S.	RELEASED FOR CONSTRUCTION BY:	R. SOROKOWSKI
DATE	06/10/25	DATE	2007/01/31

ENGINEER'S SEAL
ORIGINAL SIGNED BY
A. M. AFTANAS
2007/01/31

CONSULTANT DRAWING NO.
WS-H0402

Winnipeg
THE CITY OF WINNIPEG
WATER AND WASTE DEPARTMENT
ENGINEERING DIVISION

WATER TREATMENT PLANT
BULK CHEMICAL STORAGE
SODIUM HYPOCHLORITE AND CHEMICAL STORAGE BUILDING

MECHANICAL

STANDARD DETAILS

CITY FILE NUMBER
SHEET OF
CITY DRAWING NUMBER
1-0601S-D-H0402-001-00D

Last Save: 2007-01-31 4:51 PM

L:\WORK\79000\79538\02A-CAD\ALL\SUBMISSION\TENDER\C40 – CHEMICAL STORAGE & SODIUM HYPO GEN BUILDINGS\ISSUED FOR TENDER\MECHANICAL\BOUND DWG'S\DN_WS-H0402_ET.DWG