SHEET: COW-A1 (05/2005)

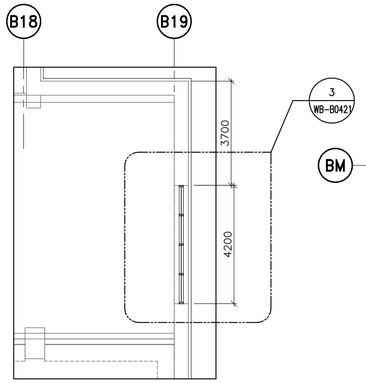


1 WB-B0120 OPENING DETAIL
1:100

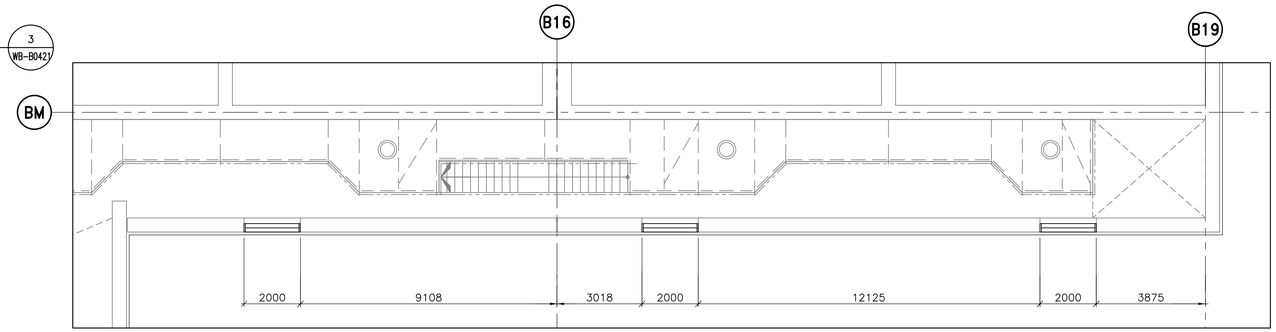


2 WB-B0120 OPENING DETAIL
1:100

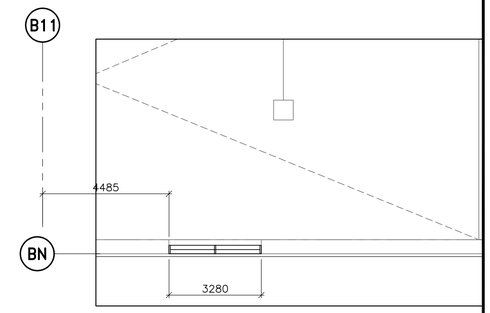


3 WB-B0120 OPENING DETAIL
1:100

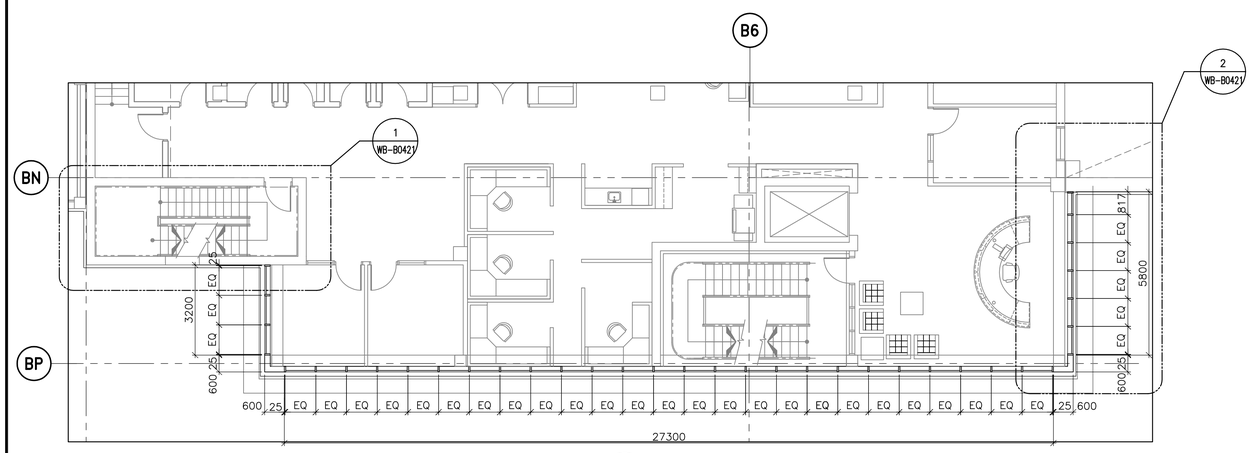


4 WB-B0120 OPENING DETAIL
1:100

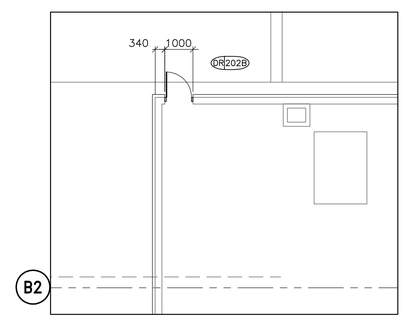


5 WB-B0120 OPENING DETAIL
1:100

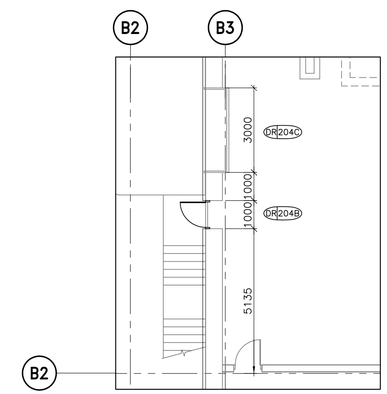


6 WB-B0120 OPENING DETAIL
1:100

NOTE:

CONTRACTOR TO COORDINATE THE TIMING OF AND ENVELOPE TIE-INS OF ALL EXTERIOR WALL/ENVELOPE PENETRATIONS, INCLUDING BOTH THOSE ENSUING FROM THIS CONTRACT AND THOSE ENSUING FROM OTHER CONTRACTS, BETWEEEN DISCIPLINES AND SUB-CONTRACTORS AND COORDINATE PROPER SEQUENCING OF INTALLATION TO ENSURE BUILDING ENVELOPE IS PROPERLY INSTALLED AND SEALED ACCORDING TO THE CONTRACT DOCUMENTS.

# SECOND FLOOR ENLARGED PLANS

SCALE 1:100

PROVINCE OF MANITOBA — NEIL COOPER ARCHITECT INC. №090 — APPROVED ARCHITECTURAL CORPORATION

B.M.
ELEV.

| NO. | REVISIONS | DATE | BY |
|---|---|---|---|
| 00 | ISSUED FOR TENDER | 07/03/19 | LK |

CH2MHILL
Frederickson Cooper ARCHITECTS
EarthTech A Tyco International Ltd. Company

| | | | |
|---|---|---|---|
| DESIGNED BY | TWS | CHECKED BY | BJS |
| DRAWN BY | AL/LK | APPROVED BY | AHL |
| SCALE: | AS NOTED | RELEASED FOR CONSTRUCTION BY: | R. SOROKOWSKI |
| DATE | 2005/08/05 | DATE | 2007/03/019 |

ENGINEER'S SEAL
ORIGINAL SIGNED BY
NEIL COOPER
2007/03/19

CONSULTANT DRAWING NO.
WB-B0420

Winnipeg
THE CITY OF WINNIPEG
WATER AND WASTE DEPARTMENT
ENGINEERING DIVISION

WATER TREATMENT PLANT
MAIN BUILDING
BUILDING ENVELOPE

ARCHITECTURAL
SECOND FLOOR ENLARGED PLANS

CITY FILE NUMBER
SHEET OF
CITY DRAWING NUMBER
1-060183-A-B0420-001-00D

Last Save: 2007-03-21 2:40 PM

E:\NC\JOBDATA\2004\04018 WINNIPEG WATER TREATMENT\02A-CAD\WTP\CONT DWGS\FCA\PLANS\07-03-19 793-2006 IFT\07-03-19 IFT ENLARGED PLANS\DN_WB-B0420_FC.DWG