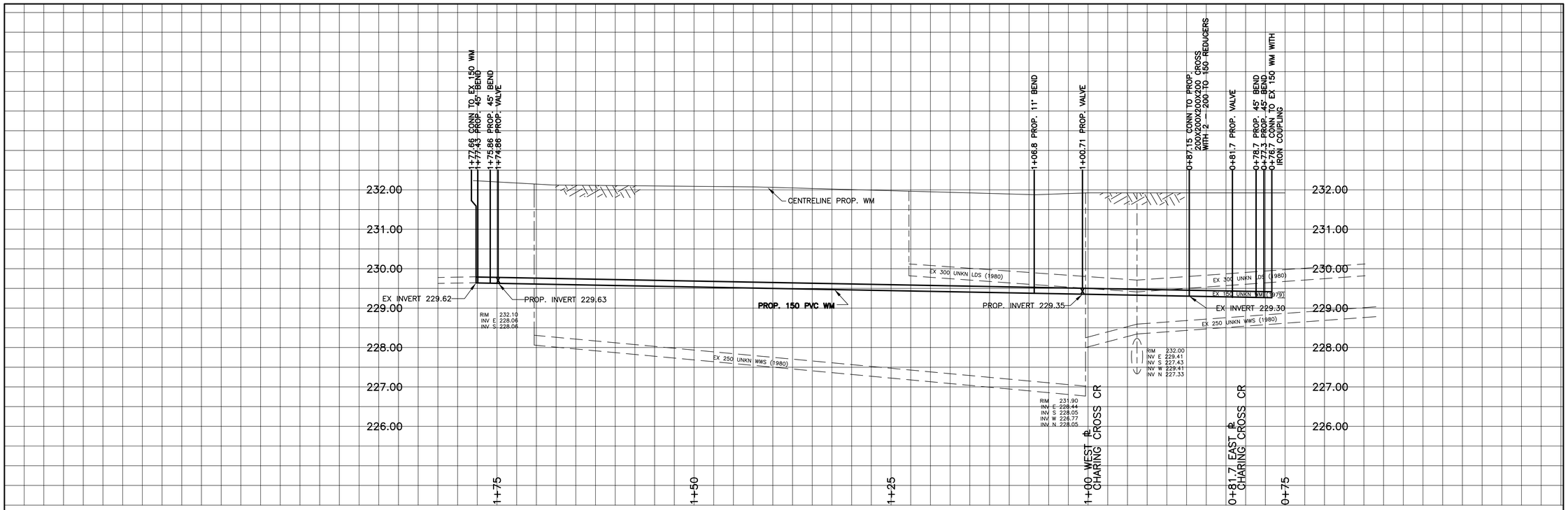

CHAINAGE ALONG NORTH PROPERTY LINE OF REGIS DRIVE

REGIS DRIVE

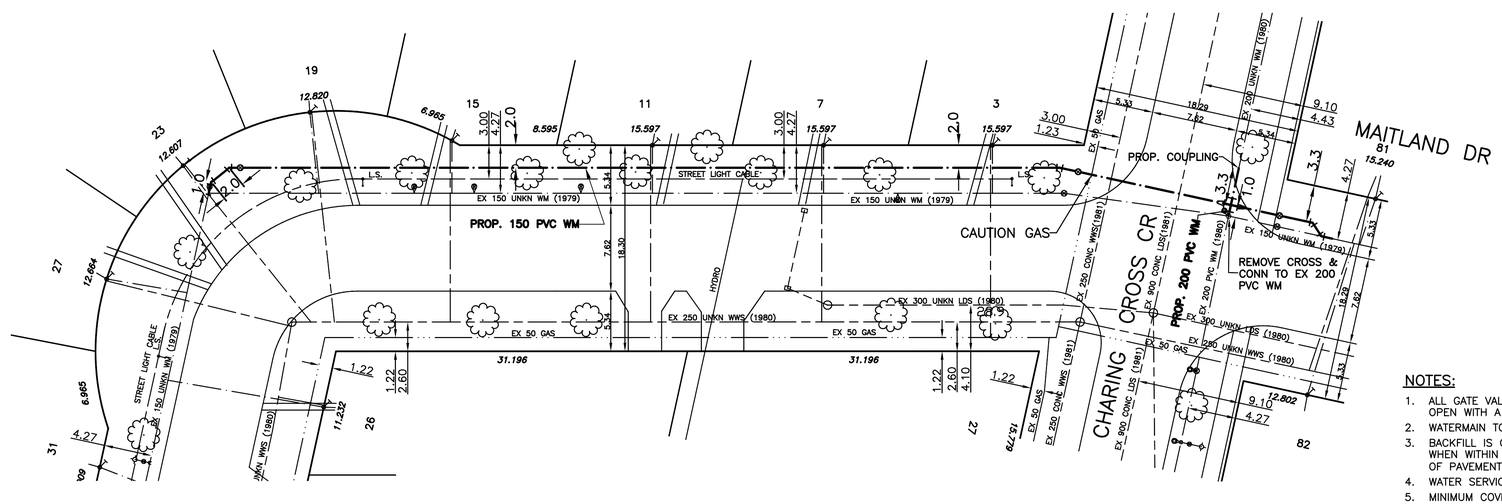

METRIC
WHOLE NUMBERS INDICATE MILLIMETRES
DECIMALIZED NUMBERS INDICATE METRES

APEGM
Certificate of Authorization
SEG Engineering Inc.
No. 252 Expiry: April 30, 2008

NOTES:

1. ALL GATE VALVES ARE COUNTER–CLOCKWISE TO OPEN WITH A BLACK OPERATING NUT.
2. WATERMAIN TO BE INSTALLED BY TRENCHLESS METHODS.
3. BACKFILL IS CLASS 5 WITHIN BOULEVARD AND CLASS 3 WHEN WITHIN PAVEMENT/SIDEWALK OR WHEN WITHIN 1.0m OF PAVEMENT OR SIDEWALK.
4. WATER SERVICES ARE 19mm UNLESS OTHERWISE NOTED.
5. MINIMUM COVER TO TOP OF WATERMAIN SHALL BE 2.4m.
6. LOCATION OF ALL SERVICES TO BE CONFIRMED IN FIELD.
7. EXPOSE EXISTING WATERMAIN TO CONFIRM DEPTH PRIOR TO CONSTRUCTION.
8. ALL LEAD SERVICES TO BE RENEWED TO PROPERTY LINE.
9. SERVICES TO BE RENEWED SHALL BE REPLACED FROM WATERMAIN TO PROPERTY LINE. ALL OTHERS TO BE RECONNECTED.

EXISTING	LEGEND – PLAN	PROPOSED	EXISTING	LEGEND – PLAN	PROPOSED	EXISTING	LEGEND – PROFILE	PROPOSED
	WATERMAIN			REDUCER		150mm W.M.	WATERMAIN	150mm W.M.
	HYDRANT			PLUG			VALVE	
	VALVE			TRAFFIC SIGNAL		300mm L.D.S.	LAND DRAINAGE SEWER	300mm L.D.S.
	LAND DRAINAGE SEWER			GAS		250mm W.W.S.	WASTE WATER SEWER	250mm W.W.S.
	WASTE WATER SEWER			HYDRO			JUNCTIONS	
	MANHOLE			M.T.S.			CULVERT	
	CATCH BASIN			SURVEY BAR				
	CURB INLET			CURB STOP				
	TEE			C.B. LEAD				
	BEND			TREE				
	ANODE			LAMP STANDARD				

LOCATION APPROVED

SUPV. U/G STRUCTURES COMMITTEE — DATE

NOTE:

LOCATION OF UNDERGROUND STRUCTURES AS SHOWN ARE BASED ON THE BEST INFORMATION AVAILABLE BUT NO GUARANTEE IS GIVEN THAT ALL EXISTING UTILITIES ARE SHOWN OR THAT THE GIVEN LOCATIONS ARE EXACT. CONFIRMATION OF EXISTENCE AND EXACT LOCATION OF ALL SERVICES MUST BE OBTAINED FROM THE INDIVIDUAL UTILITIES BEFORE PROCEEDING WITH CONSTRUCTION.

B.M. CWBM: 78–011
ELEV. ELEV 233.234

NO.	REVISIONS	DATE	BY
1	BID OPPORTUNITY 339–2007	MAY 07	DJ

SEG ENGINEERING INC.
ENGINEERING
200 TACHE AVENUE
WINNIPEG, MANITOBA
(204)–233–2113

DESIGNED BY	DJ	CHECKED BY	SM
DRAWN BY	DJ	APPROVED BY	IMcK
HOR. SCALE:	1:250	RELEASED FOR CONSTRUCTION	ORIGINALLY SIGNED BY K. ZUREK P. ENG
VERT. SCALE:	1:50		
DATE	MAY 2007	DATE	May 25, 2007

ENGINEERS
PROVINCE OF MANITOBA
I. G. McKINNON
REGISTERED PROFESSIONAL ENGINEER
CONSULTANT DRAWING NO.
069–022–11

Winnipeg

THE CITY OF WINNIPEG
WATER AND WASTE DEPARTMENT

2007 CAPITAL WORKS
WATERMAIN RENEWALS

REGIS DRIVE

CHARING CROSS CRESCENT
TO 75M WEST OF CHARING CROSS CRESCENT

SHEET 1 OF 1
CITY DRAWING NO.
D–9190

ACAD 2000