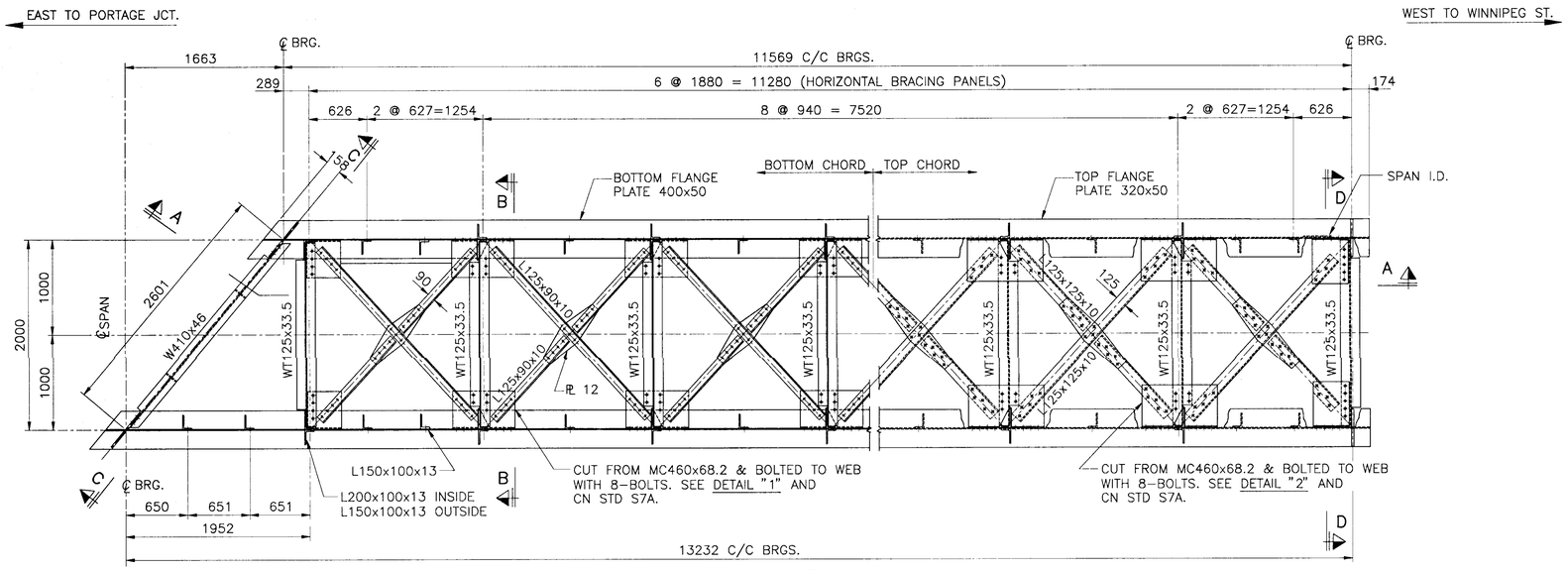

PLAN
SCALE 1:25

NOTE: SEE ALSO CN STD. DWG.'S S1, S2A, S4 & S6

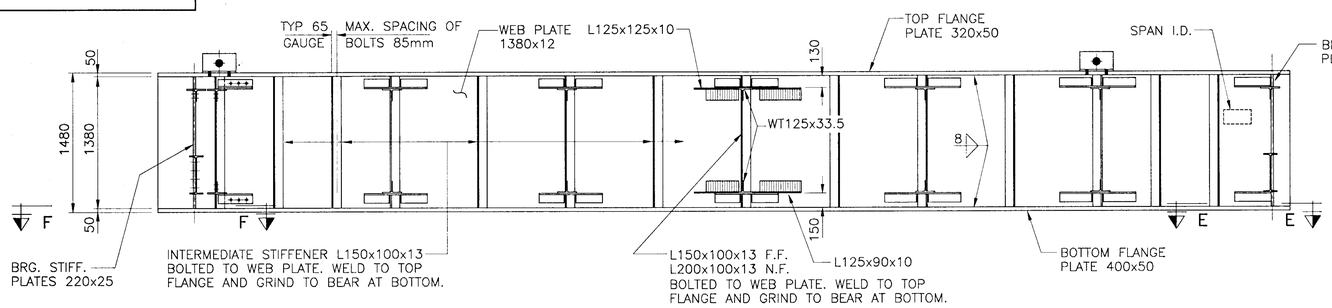

SECTION A–A
SCALE 1:25

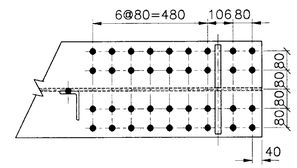

SECTION E–E (BOTH GIRDERS)
SCALE 1:10

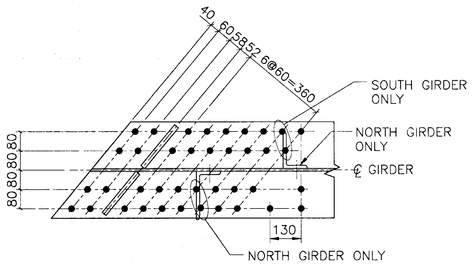

SECTION F–F (SOUTH GIRDER)
SECTION F'–F' (NORTH GIRDER)
SCALE 1:10

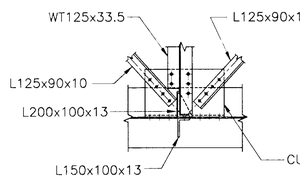

DETAIL "1" (BOTTOM CHORD)
SCALE 1:20

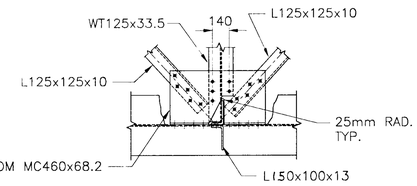

DETAIL "2" (TOP CHORD)
SCALE 1:20

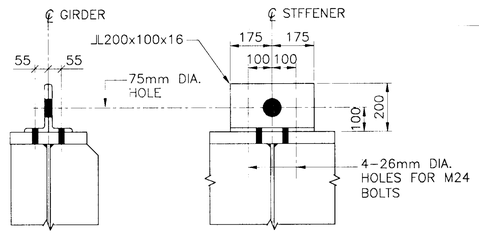

LIFTING DEVICE DETAILS
SCALE 1:10

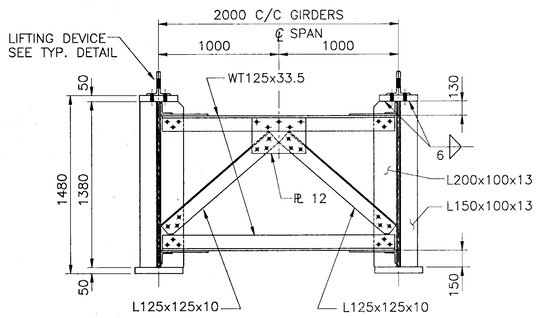

SECTION B–B
SCALE 1:20

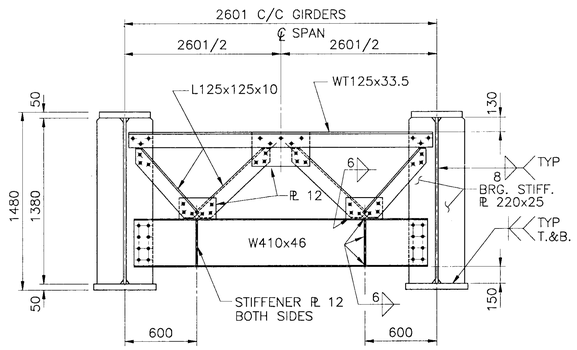

SECTION C–C
SCALE 1:20

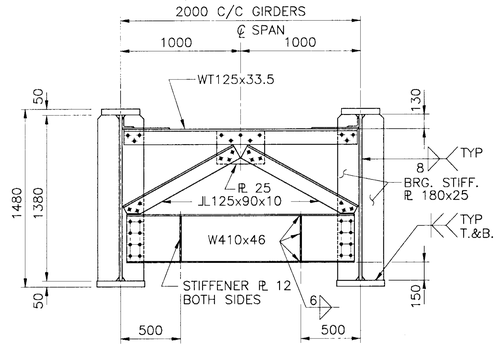

SECTION D–D
SCALE 1:20

TABLE OF STRESSES

13.2m SPAN (C/C BEARINGS)

STEEL: SEE NOTES

TOP FLANGE PLATE	320x50	AREA = 16000 mm^2
WEB PLATE	1380X12	AREA = 16560 mm^2
BOTTOM FLANGE PLATE	400x50	AREA = 20000 mm^2

S_{x-x} TOP = 26.3 E+06 mm^3
S_{x-x} BOT = 30.5 E+06 mm^3
I_{x-x} = 20.9 E+09 mm^4

	END REACTION kN	SHEAR STRESS MPa	BENDING MOMENT kNm	BENDING STRESSES IN FLANGES (MPa)
DEAD LOAD (12.4 kN/m)	82	5.0	270	10.3
LIVE LOAD (E70)	616	37.2	1762	67.0
IMPACT 51.6 %	319	19.2	911	34.7
CENTRIFUGAL FORCE / COMP.	99	6.0	281	10.7
TOTAL GROUP "A"	1116	67.4	3225	122.7
ALLOWBLE STRESSES (BENDING & SHEAR)		122.5		192.5
RATIO: WORKING/ALLOWABLE		0.55		0.64

$$\frac{\text{DEFL. LL + I}}{\text{SPAN}} = \frac{1}{1028}$$

ALLOWABLE STRESS RANGE FOR FATIGUE CATEGORY "B" FOR N>2,000,000 CYCLES

S_{rfat} = 110.30

MAXIMUM DESIGN STRESS RANGE AT BOTTOM FLANGE TO WEB WELD AT MIDSPAN USING REDUCED IMPACT, 65% OF DESIGN IMPACT

MPa $< S_{rfat}$

$$\text{RATIO} = \frac{\text{MAX. FATIGUE STRESS RANGE}}{\text{ALLOWABLE FATIGUE STRESS}} = 0.70$$

NOTES

- FOR GENERAL NOTES SEE DRAWING –1.1
- DESIGN AND WORKMANSHIP SHALL BE IN ACCORDANCE WITH AREA MANUAL CHAPTER 15.
- MATERIAL SHALL BE IN ACCORDANCE WITH THE FOLLOWING SPEC'S.:
  - STRUCTURAL STEEL: CSA CAN3–G40.21–M92 GRADE 300W FOR GIRDER WEBS & FLANGES, BEARING STIFFENER PLATES GRADE 300W FOR BEARING PLATES, STIFFENER ANGLES, JACKING BEAMS AND FOR REMAINING MEMBERS.
  - WELDING: CSA CAN3–W59–1989
  - HS BOLTS: ASTM A325, M22, TYPE 1 (OR EQUIVALENT)
- ALL HOLES SHALL BE DRILLED FULL SIZE OR SUB–PUNCHED AND REAMED.
- ALL H.S. BOLTS SHALL BE TIGHTENED BY THE TURN–OF–NUT METHOD.
- BOTTOM FLANGES OF GIRDERS OVER BEARINGS SHALL BE TRUE AND SQUARE: MAXIMUM MEASURED DEVIATION AT OUTSIDE EDGE OF BEARING PLATES SHALL NOT EXCEED 1mm.
- DEVIATION FROM STRAIGHTNESS OF MAIN GIRDER SHALL NOT EXCEED 6mm.
- DEVIATION RESULTING IN NEGATIVE CAMBER SHALL NOT BE PERMITTED.
- THE SPAN SHALL BE SHIPPED ENTIRELY SHOP ASSEMBLED.
- CN STANDARD DRAWINGS ARE REFERENCED TO PROVIDE ADDITIONAL INFORMATION NOT SHOWN ON THIS DRAWING.

ESTIMATED QUANTITIES

STRUCTURAL STEEL: (EXCLUDING BEARINGS) 16000 kg

G. A. Faulk P.ENG.
SENIOR STRUCTURAL ENGINEER

No.	Date	Revision	By Par
A	94–03–25	GENERAL	S.S.

Region PRAIRIE DIST. Sub-division RIVERS Mile 0.40

BRIDGE OVER MAIN STREET WINNIPEG, MANITOBA
13.2m DPG SPAN

Drawn S.S.Jr Designed Checked Scale 1:20 & 1:25 Date 94–03–15

Office of Chief Engineer
Bureau de l'Ingénieur en Chef

File Reference 0.4 RIVERS Drawing Number AA611–0.40–1.3 A