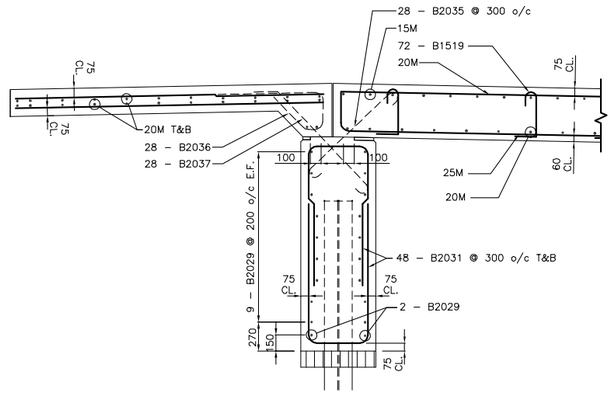

J 7 8 SECTION

1:25 0 250 750 1250mm

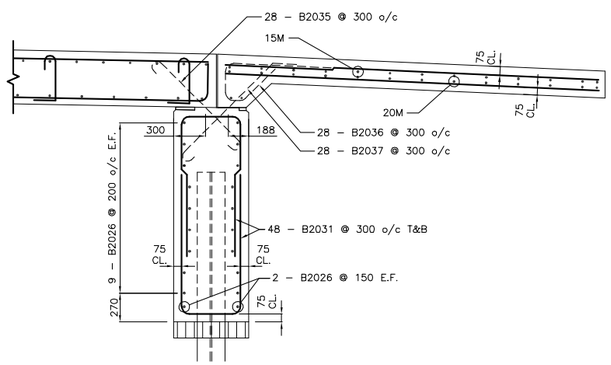

K 7 8 SECTION

1:25 0 250 750 1250mm

BILL OF REINFORCING STEEL ⚠1

STRAIGHT BARS

MARK	QTY.	LENGTH (mm)	MASS (kg)	MARK	QTY.	LENGTH (mm)	MASS (kg)
B1501	22	5000	172.7	B2011	2	330	1.6
B1502	28	2850	127.5	B2012	2	370	1.7
B1503	20	5210	163.6	B2013	2	425	2.0
B1504	6	7000	65.9	B2014	2	505	2.4
B1505	28	3470	154.7	B2015	2	605	2.8
B1506	2	300	0.9	B2016	2	730	3.4
B1507	2	325	1.0	B2017	2	880	4.1
B1508	2	395	1.2	B2018	2	1075	5.1
B1509	2	505	1.6	B2019	2	1320	6.2
B1510	2	660	2.1	B2020	2	1381	6.5
B1511	2	880	2.8	B2021	2	1960	9.2
B1512	2	1190	3.7	B2022	2	2760	13.0
B1513	2	1380	4.3	B2023	2	500	2.4
B1514	2	2360	7.4	B2024	2	1300	6.1
B1515	2	500	1.6	B2025	2	2100	9.9
B1516	2	1700	5.3	B2026	40	7400	697.1
B1517	12	5650	106.4	B2027	4	415	3.9
B1518	12	3050	57.5	B2028	4	1015	9.6
				B2029	40	5800	546.4
B2001	33	6350	493.5	B2030	12	1280	36.2
B2002	33	3600	279.8				
B2003	64	5650	851.6				
B2004	64	3050	459.7				
B2005	22	5000	259.1				
B2006	42	2850	286.8				
B2007	20	5210	245.4				
B2008	6	7000	98.9				
B2009	42	3470	348.2				
B2010	2	305	1.4				

BENT BARS

MARK	TYPE	QTY.	A	B	C	D	LENGTH (mm)	MASS (kg)
B1519	C	72	200	365	90	60	715	80.8
B1520	B	152	200	1125			1500	358.0
B2031	A	146	1300	550			1850	636.1
B2032	A	8	1700	550			2250	42.4
B2033	A	10	1800	550			2350	55.3
B2035	D	56	60	100	800		960	126.6
B2036	E	56	900	350	160	420	1830	241.3
B2037	F	56	400	825	90	60	1375	181.3
B2501	B	65	365	6750			7115	1815.2
B2502	B	65	365	3600			3965	1011.6

TOTAL MASS OF REINFORCING STEEL (kg) = 10122.8

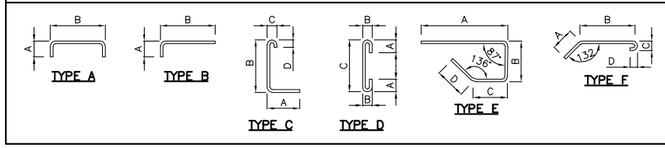

APEGM
Certificate of Authorization
Stantec Consulting Ltd.
No. 1301 Expiry: April 30, 2008

LOCATION APPROVED
UNDERGROUND STRUCTURES

SUPV. U/G STRUCTURES COMMITTEE DATE

NOTE:
LOCATION OF UNDERGROUND STRUCTURES AS SHOWN ARE BASED ON THE BEST INFORMATION AVAILABLE BUT NO GUARANTEE IS GIVEN THAT ALL EXISTING UTILITIES ARE SHOWN OR THAT THE GIVEN LOCATIONS ARE EXACT. CONFIRMATION OF EXISTENCE AND EXACT LOCATION OF ALL SERVICES MUST BE OBTAINED FROM THE INDIVIDUAL UTILITIES BEFORE PROCEEDING WITH CONSTRUCTION.

B.M. ELEV.

NO.	REVISIONS	DATE	BY
2	ISSUED FOR ADDENDUM 1	07.12.13	K.S.A.
1	ISSUED FOR TENDER	07.12.03	K.S.A.

Stantec Consulting Ltd.
905 Waverley Street, Winnipeg, Manitoba
Tel 204-489-5900 Fax 204-453-9012

DESIGNED BY K.S.A. | CHECKED BY B.J.W.
DRAWN BY J.G.F. | APPROVED BY K.S.A.
HOR. SCALE: AS SHOWN
VERTICAL:
DATE OCT. 20, 2007
AUTHORIZED BY: DATE
BILL EBENSPANGER DEC. 3, 2007
B. EBENSPANGER, P. ENG.
BRIDGE PROJECTS ENGINEER

ENGINEER'S SEAL
ORIGINAL SEALED BY K.S. AMY P. ENG. 07.12.03

CONSULTANT DRAWING NO.
SB707-682

THE CITY OF WINNIPEG
PUBLIC WORKS DEPARTMENT
TRANSPORTATION ENGINEERING DIVISION

ACCESS BRIDGE
TO 330 AND 334 BONNER AVENUE

REINFORCING SECTIONS, DETAILS & SCHEDULE

SHEET 8 OF 9
CAD FILE DRAWING NUMBER 31410sb707-682.dwg
CITY DRAWING NUMBER BI76-08-08

dwg: 682-31410sb707-02 Sheet_Reg_Sheet1 Layout: Layout1 Date: Dec 3, 2007 Time: 11:31:11 AM