Exterior Double Map Kiosk (Typical)

Drawing #: WF_T_02

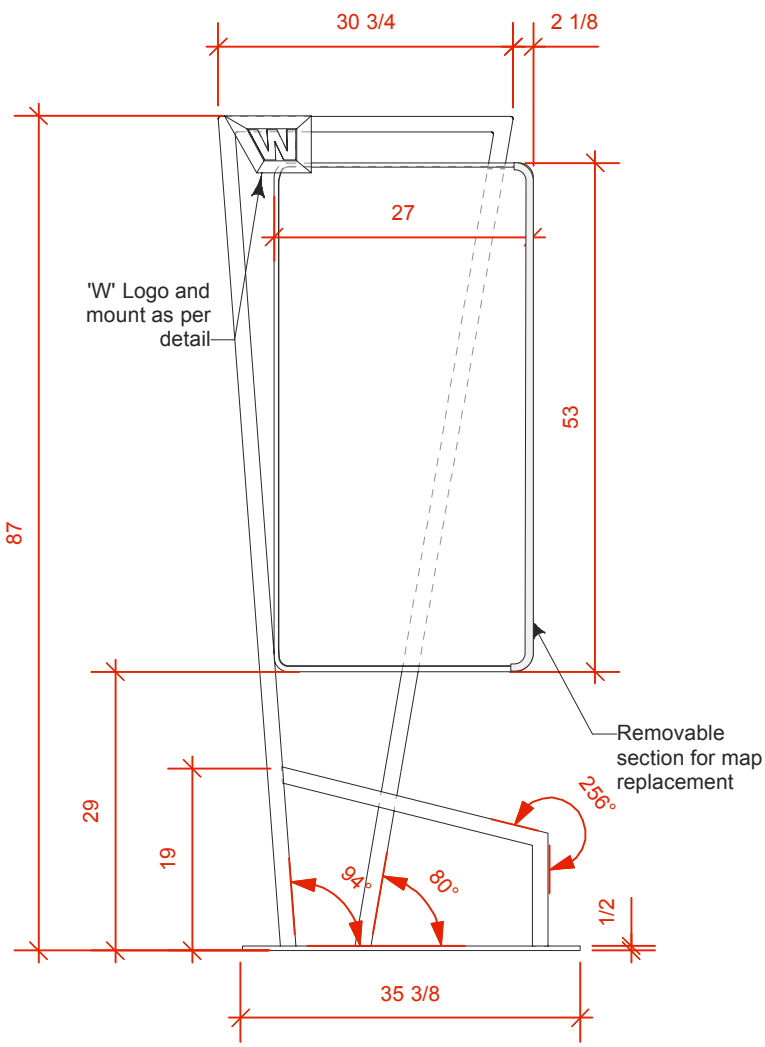

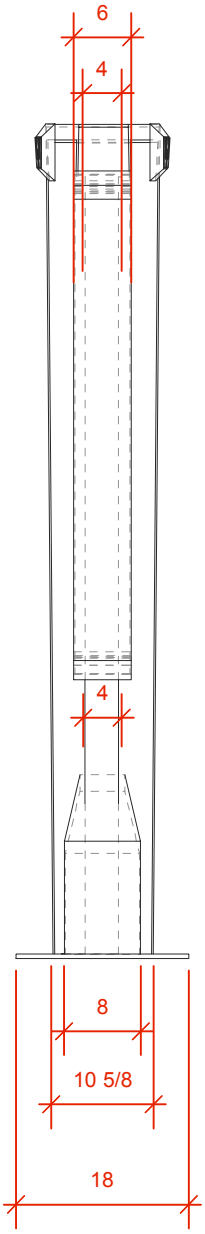

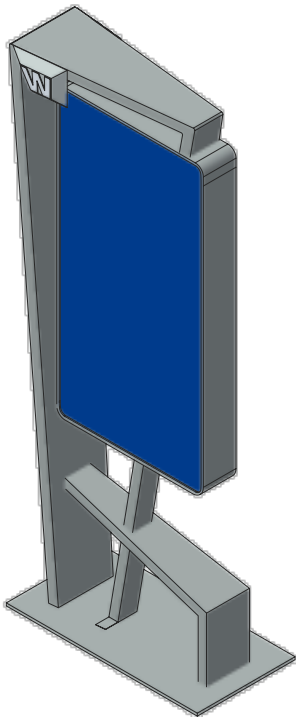

SECTION 1 (Typical Section @ Perimeter)

SCALE: 1:2

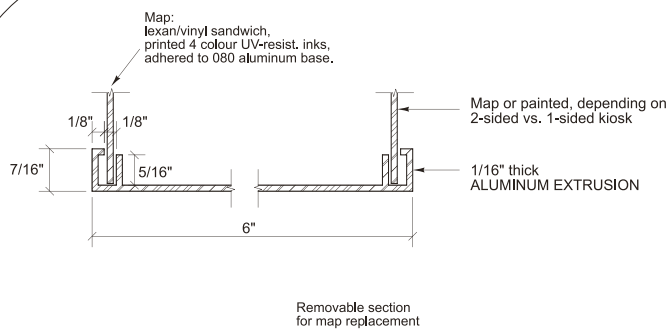

Note:

1. All outer edges rounded and smoothed for consumer protection

2/7/2008