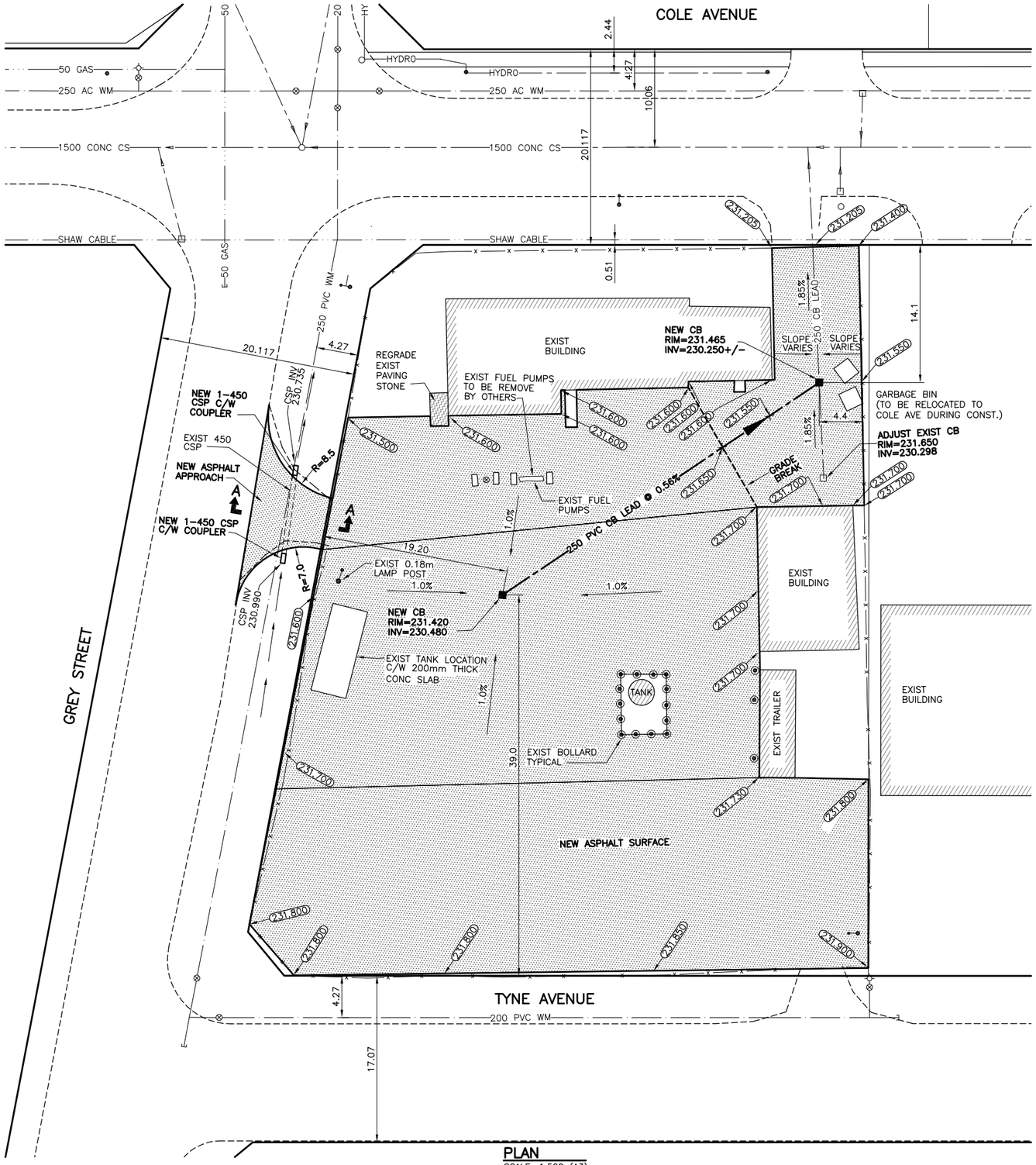

PLAN
SCALE: 1:500 (A3)

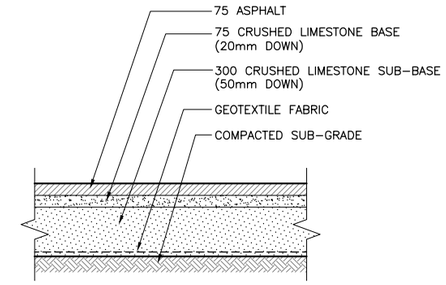

TYPICAL ASPHALT SECTION
SCALE: 1:20

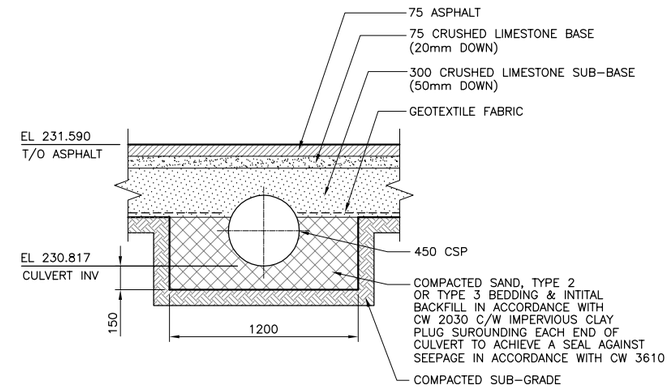

SECTION A-A
SCALE: 1:20

PROPERTY LIMITS DELINEATION

DELINEATION OF PROPERTY LIMITS AS SHOWN ON THIS DWG DOES NOT REPRESENT A "LEGAL SURVEY". KGS GROUP MAKES NO REPRESENTATION OR WARRANTY AS TO THE ACCURACY OF PROPERTY LIMITS DELINEATED ON THIS DWG, NOR ON THE DIMENSIONAL ACCURACY OF DWG FEATURES RELATIVE TO THOSE PROPERTY LIMITS.

WARNING

1. NOTIFY THE GAS COMPANY OF THE PROPOSED LOCATION OF EXCAVATION.
2. TAKE PRECAUTION TO AVOID DAMAGE TO GAS COMPANY INSTALLATIONS.
3. SEE PROVINCIAL REGULATION 210/72 FOR DETAILS.

METRIC

WHOLE NUMBERS INDICATE MILLIMETRES
DECIMALIZED NUMBERS INDICATE METRES

PRELIMINARY
NOT TO BE USED FOR CONSTRUCTION

0 5 10 15 20 25m
SCALE: 1:250 METRIC A1
1:500 METRIC A3

APEGM
Certificate of Authorization
KGS Group
No. 245 Date:

EXISTING	LEGEND-PLAN	PROPOSED	EXISTING	LEGEND-PLAN	PROPOSED	EXISTING	LEGEND-PROFILE	PROPOSED
300 LDS	LAND DRAINAGE SEWER	300 LDS						
250 WWS	WASTE WATER SEWER	250 WWS		TEST HOLE				
	GAS			GUY WIRE				
	HYDRO			LIGHT STANDARD				
	M.T.S.			BACK OF CURB				
150 WM	WATERMAIN	150 WM		CONCRETE				
	HYDRANT			ASPHALT				
	VALVE			SIDEWALK			℄ PROFILE	
	MANHOLE			PROPERTY LINE			N/W LANE EDGE	
	CATCH BASIN			SURVEY BAR			S/E LANE EDGE	
	CURB INLET			GEODETIC BENCHMARK			PARKING/DRIVEWAY	
	POLES T-MTS H-HYDRO		231.334	ELEVATION	32.231		WINDOW/DOOR SILL	

LOCATION APPROVED
UNDERGROUND STRUCTURES

SUPV. U/G STRUCTURES COMMITTEE DATE

NOTE:
LOCATION OF UNDERGROUND STRUCTURES AS SHOWN ARE BASED ON THE BEST INFORMATION AVAILABLE BUT NO GUARANTEE IS GIVEN THAT ALL EXISTING UTILITIES ARE SHOWN OR THAT THE GIVEN LOCATIONS ARE EXACT. CONFIRMATION OF EXISTENCE AND EXACT LOCATION OF ALL SERVICES MUST BE OBTAINED FROM THE INDIVIDUAL UTILITIES BEFORE PROCEEDING WITH CONSTRUCTION.

B.M. 28-022
ELEV. 231.341m

85R576-N.W. COR. NAIRN AVE. & GREY ST., IN VALVE BOX, BOLT IN 4.6m CONC. PILE, 2.4m E. OF W.L. OF GREY ST. & 0.6m N. OF N.L. OF NAIRN AVE. PRODUCED FROM THE E.

NO.	REVISIONS	DATE	BY
B	RE-ISSUED FOR REVIEW	--/07/09	
A	ISSUED FOR REVIEW	19/09/06	RJH

KGS GROUP CONSULTING ENGINEERS

DESIGNED BY	RO	CHECKED BY	RJH
DRAWN BY	DW	APPROVED BY	
HOR. SCALE:	1:250	RELEASED FOR CONSTRUCTION:	
VERTICAL:	1:50		
DATE	14/09/06	DATE	

ENGINEER'S SEAL
PROVINCE OF MANITOBA
R.J. HOUSTON
Member 4395
REGISTERED PROFESSIONAL ENGINEER

CONSULTANT DRAWING NO.
09-0107-04

Winnipeg

THE CITY OF WINNIPEG
PROPERTY, PLANNING AND DEVELOPMENT DEPARTMENT

PROJECT TITLE
CONSTRUCTION OF AN ASPHALT PARKING AREA AT 3 GREY STREET

NEW ASPHALT PAVING & CATCHBASIN INSTALLATION

SHEET 02 OF 03
COMPUTER FILE NAME 09-0107-04_0002-Rev B
CITY DRAWING NUMBER 0002

2006\06-0107-16\MUN\DWGS\INSECT_CONTROL\DWG\INSECT_CONTROL.DWG