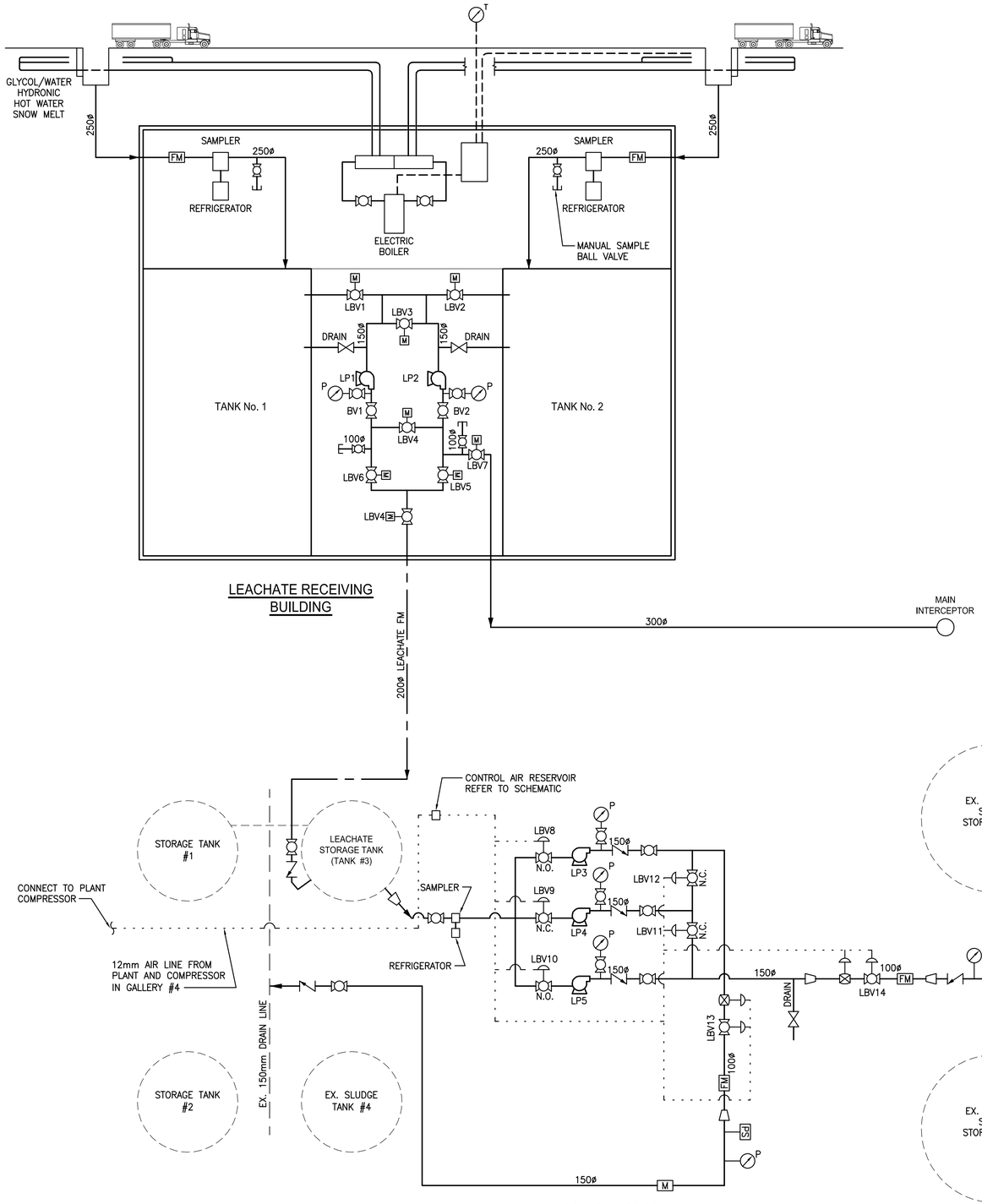

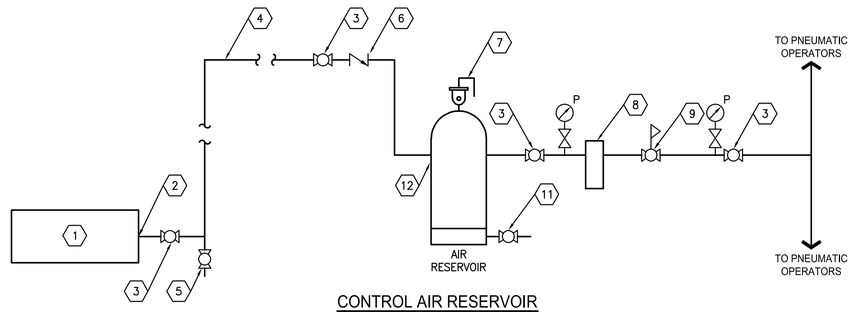

CONTROL AIR RESERVOIR SCHEMATIC

1. EXISTING AIR COMPRESSOR
2. CONNECT TO EXISTING AIR SUPPLY PIPING
3. ISOLATION BRONZE BALL VALVE
4. RUN COPPER PIPE FROM EXISTING COMPRESSORS TO AIR RESERVOIR IN GALLERY #2
5. PROVIDE DRAIN DRIP BRONZE BALL VALVE AND CAP AT PIPING LOW AREAS
6. PROVIDE BRONZE CHECK VALVE ORIENTATED TO PREVENT BACKFLOW OF AIR FROM NEW RESERVOIR
7. BRONZE PRESSURE RELIEF VALVE FOR (150 PSI) 1,034kPa
8. EXTRACTOR FILTER / DRYER
9. AIR PRESSURE REGULATOR FOR 0–150 PSI
10. 140 LITRE AIR RESERVOIR
11. DRAIN VALVE
12. 226L ASME STEEL AIR RESERVOIR

LEGEND

- GATE VALVE
- CHECK VALVE
- BALL VALVE
- ELECTRIC OPEN/CLOSE CONTROL BALL VALVE
- PNEUMATIC OPEN/CLOSE CONTROL VALVE
- PNEUMATIC MODULATING OPEN/CLOSE FLOW CONTROL PNCH VALVE
- FM FLOW METER
- REDUCER
- NO NORMALLY OPEN
- NC NORMALLY CLOSED
- T TEMPERATURE GUAGE
- PUMP
- P PRESSURE GUAGE
- PS PRESSURE SWITCH
- P/V PRESSURE / VACCUM GUAGE
- CAPPED PIPE END

METRIC

WHOLE NUMBERS INDICATE MILLIMETRES
DECIMALIZED NUMBERS INDICATE METRES

APEGM
Certificate of Authorization
Stantec Consulting Ltd.
No. 1301 Date:_____

LOCATION APPROVED
UNDERGROUND STRUCTURES

SUPV. U/G STRUCTURES COMMITTEE DATE

NOTE:
LOCATION OF UNDERGROUND STRUCTURES AS SHOWN ARE BASED ON THE BEST INFORMATION AVAILABLE BUT NO GUARANTEE IS GIVEN THAT ALL EXISTING UTILITIES ARE SHOWN OR THAT THE GIVEN LOCATIONS ARE EXACT. CONFIRMATION OF EXISTENCE AND EXACT LOCATION OF ALL SERVICES MUST BE OBTAINED FROM THE INDIVIDUAL UTILITIES BEFORE PROCEEDING WITH CONSTRUCTION.

B.M.
ELEV.

NO.	REVISIONS	DATE	BY
A	ISSUED FOR TENDER	10.02.16	A.H.B

Stantec Consulting Ltd.
905 Waverley Street, Winnipeg, Manitoba
Tel 204-489-5900 Fax 204-453-9012

DESIGNED BY	A.H.B.	CHECKED BY	E.W.
DRAWN BY	W.A.	APPROVED BY	A.H.B.
HOR. SCALE: VERTICAL:	AS NOTED	RELEASED FOR CONSTRUCTION:	
DATE	09.09.21	DATE	

ENGINEER'S SEAL

Winnipeg

THE CITY OF WINNIPEG
WATER AND WASTE DEPARTMENT

NORTH END WATER POLLUTION CONTROL CENTRE
HAULED WASTEWATER RECEIVING FACILITIES
LEACHATE RECEIVING BUILDING
PROCESS FLOW SCHEMATICS

TENDER NO.	CITY DRAWING NUMBER	SHEET	OF
822-2009	I-0101A-P0004-001	4	8

V:\1112\active\111211930\drawing\404_working\sheet_files\process\newpcc\11930p-104-le-sch.dwg
2010-02-16 08:52AM By: bwiebe

16/710