A1 SIZE 23.4" x 33.1" (594mm x 841mm)

MARKS	NO BARS	SIZE	LENGTH	TYPE	A	B	C	D	E	F	G	H	J	K	L	M	O	R	SHAPE	MASS (kg)
WEST DECK EXTENSION - SS																				
DE1501S	73	15	2850	T2	210	420	795	420	795		210									330.8
DE1502S	134	15	875	1	210	515					210									186.4
DE1503S	28	15	1530	27			780	750				570		500			1280			119.2
DE1504S	2	15	3835	STR																12.2
DE1505S	2	15	3740	STR																11.9
DE1508S	28	15	735	27			460	275				175		210			670			32.7
DE1509S	30	15	870	X1		320	135	130	285						200			47		18.0
DE1510S	30	15	1015	17		425	200	390												21.0
DE1511S	4	15	3240	2		2640					600									20.6
DE1512S	4	15	2800	2		2200					600									17.8
DE1513S	4	15	1675	2		1075					600									10.7
DE1514S	4	15	1235	2		635					600									7.9
DE1519S	4	15	1565	X8	600	365	600						65	360						10.0
DE1520S	2	15	1955	2	600	755					600									6.2
DE2001S	14	20	12192	STR																406.4
DE2002S	14	20	4935	STR																164.5
DE2003S	32	20	1010	STR																77.0
DE2004S	32	20	1165	2		815					350									88.8
DE2005S	65	20	2000	2		1450					550									309.5
																			TOTAL	1851.4
EAST DECK EXTENSION - SS																				
DE1501S	73	15	2850	T2	210	420	795	420	795		210									330.8
DE1502S	134	15	875	1	210	515					210									186.4
DE1503S	28	15	1530	27			780	750				570		500			1280			119.2
DE1506S	2	15	3735	STR																11.9
DE1507S	2	15	3800	STR																12.1
DE1508S	28	15	735	27			460	275				175		210			670			32.7
DE1509S	30	15	870	X1		320	135	130	285						200			47		18.0
DE1510S	30	15	1015	17		425	200	390												21.0
DE1515S	4	15	3180	2		2580					600									20.2
DE1516S	4	15	2740	2		2140					600									17.4
DE1517S	4	15	1645	2		1045					600									10.5
DE1518S	4	15	1205	2		605					600									7.7
DE1519S	4	15	1565	X8	600	365	600						65	360						10.0
DE1520S	2	15	1955	2	600	755					600									6.2
DE2001S	14	20	12192	STR																406.4
DE2002S	14	20	4935	STR																164.5
DE2003S	32	20	1010	STR																77.0
DE2004S	32	20	1165	2		815					350									88.8
DE2005S	65	20	2000	2		1450					550									309.5
																			TOTAL	1850.1
DECK - GFRP																				LENGTH(m)
D1601G	448	16	8400	STR																3763.2
D1602G	64	16	4400	STR																281.6
D1603G	32	16	8000	STR																256.0
D1604G	198	16	12192	STR																2414.0
D1605G	99	16	3485	STR																345.0
D1606G	99	16	3165	STR																313.3
D1608G	396	16	800	STR																316.8
																			TOTAL LENGTH (16)	7690.0
D2207G	128	22	12000	STR																1536.0
																			TOTAL LENGTH (22)	1536.0

MARKS	NO BARS	SIZE	LENGTH	TYPE	A	B	C	D	E	F	G	H	J	K	L	M	O	R	SHAPE	MASS (kg)
DECK MEDIAN - SS																				
D1510S	17	15	3045	X6	215	260	2105	240	225			215	195	100			2390			82.3
D1511S	9	15	3035	X6	215	260	2095	240	225			215	195	100			2380			43.4
D1512S	9	15	3025	X6	215	260	2085	240	225			215	195	100			2370			43.3
D1513S	10	15	3020	X6	215	260	2080	240	225			215	195	100			2365			48.0
D1514S	12	15	3015	X6	215	260	2075	240	225			215	195	100			2360			57.5
D1515S	15	15	3000	X6	215	260	2065	240	225			215	195	100			2350			71.6
D1516S	38	15	2995	X6	215	260	2055	240	225			215	195	100			2340			181.0
D1517S	96	15	2990	X6	215	260	2050	240	225			215	195	100			2335			456.4
D1518S	70	15	8400	STR																934.9
D1519S	5	15	5175	STR																41.1
D1520S	5	15	5130	STR																40.8
D1521S	5	15	9550	STR																75.9
																			TOTAL	2076.2
NORTH BARRIER - SS																				
B1501S	203	15	2970	STR																958.6
B1502S	8	15	2585	STR																32.9
B1503S	8	15	2185	STR																27.8
B1506S	221	15	870	27			420	450				255		370						305.7
B1507S	221	15	2170	X4	960	160	850	200				90		845	250					762.5
B1510S	6	15	1780	X4	700	160	720	200				75		715	240					17.0
B1511S	6	15	1415	X7	675	270	470					385		270	32					13.5
B1512S	6	15	1020	27			770	250				250		12						9.7
B1513S	197	15	1340	1	180	980					180									419.7
B1515S	3	15	1500	STR																7.2
B1516S	3	15	1000	STR																4.8
																			TOTAL	2559.4
NORTH BARRIER - MMFX-2																				
B1501X	16	15	2995	STR																75.2
B1502X	8	15	2185	STR																27.4
B1505X	21	15	1780	X4	700	160	720	200				75		715	240					58.7
B1506X	21	15	1430	X7	675	225	530					435		300	32					47.1
B1507X	21	15	1020	27			770	250				250		12						33.6
																			TOTAL	242.0
SOUTH BARRIER - SS																				
B1501S	203	15	2970	STR																958.6
B1502S	8	15	2585	STR																32.9
B1503S	8	15	2185	STR																27.8
B1504S	6	15	1425	X7	675	280	470					385		270		32				13.6
B1505S	6	15	1020	X5			770	250				250		12						9.7
B1506S	221	15	870	27			420	450				255		370						305.7
B1508S	221	15	2210	X4	1000	160	850	200				90		845	250					776.6
B1509S	6	15	1840	X4	740	160	740	200				75		735	240					17.6
B1514S	197	15	1430	1	180	1070					180									447.9
B1515S	3	15	1500	STR																7.2
B1516S	3	15	1000	STR																4.8
																			TOTAL	2602.4
SOUTH BARRIER - MMFX-2																				
B1503X	16	15	660	STR																16.6
B1504X	6	15	1840	X4	740	160	740	200				75		735	240					17.3
B1508X	6	15	1440	X7	675	235	530					435		300		32				13.6
B1509X	6	15	1020	X5			770	250				250		12						9.6
																			TOTAL	57.1

DWG TOTAL WEIGHT	=	299.1	kg	MMFX-2
DWG TOTAL WEIGHT	=	10938.5	kg	STAINLESS STEEL
DWG TOTAL LENGTH (16)	=	7690.0	m	GFRP
DWG TOTAL LENGTH (22)	=	1536.0	m	GFRP

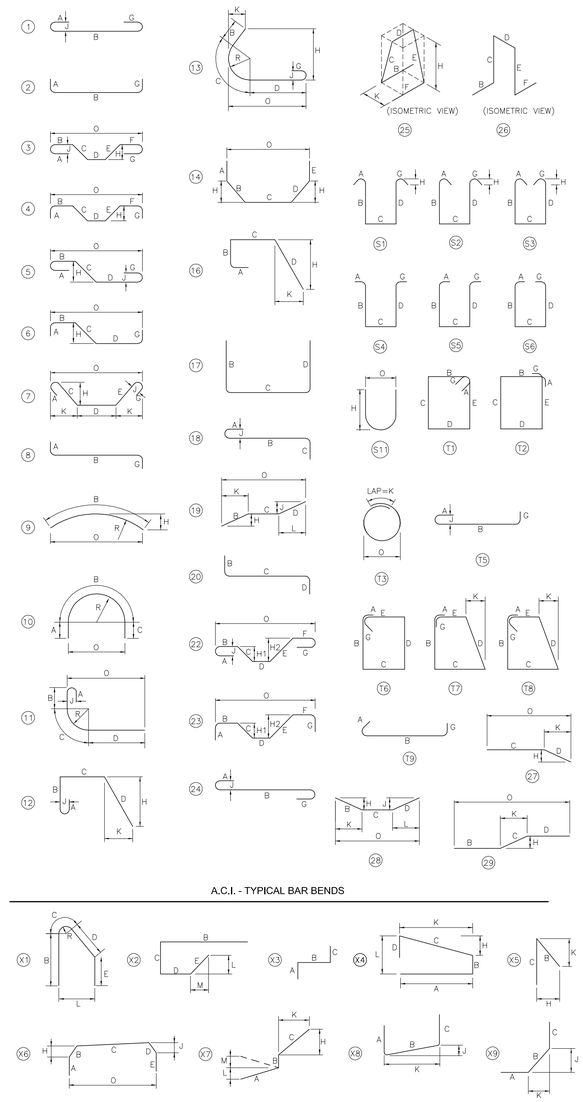

A.C.I. - TYPICAL BAR BENDS

SPECIAL BAR BENDS

NOTES:

1. ALL DIMENSIONS ARE OUT-TO-OUT OF A BAR EXCEPT 'A' AND "G" ON STANDARD 180° AND 135° HOOKS.
2. "J" DIMENSION ON 180° HOOKS TO BE SHOWN ONLY WHERE NECESSARY TO RESTRICT HOOK SIZE, OTHERWISE STANDARD HOOKS ARE TO BE USED.
3. ON TRUSS BARS "J" WILL BE KEPT EQUAL TO OR LESS THEN "H", WHERE "J" CAN EXCEED "H" IT SHOULD BE SHOWN.

4. THE STIRRUPS "H" DIMENSION SHOULD BE SHOWN ONLY WHERE NECESSARY TO FIT WITHIN CONCRETE.
5. CRITICAL DIMENSIONS ARE TO BE IDENTIFIED WHERE BARS ARE TO BE BENT MORE ACCURATELY THAN STANDARD BENDING TOLERANCES.
6. ON TYPE T3 "G" DIMENSION IS EQUAL TO CLASS C SPLICE.
7. FIGURES SHOWN IN CIRCLES SHOWN TYPES.
8. ALL BAR BENDS OTHER THAN THE TYPES SHOWN ABOVE MUST BE DESIGNATED TYPE "X".

UNLESS OTHERWISE NOTED DIAMETER D IS THE SAME FOR ALL HOOKS AND BENDS ON A BAR.

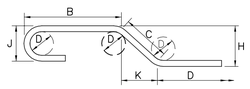

ENLARGED VIEW SHOWING BAR BENDING DETAILS

BID OPPORTUNITY NO. 133-2010

APEGM
Certificate of Authorization
AECOM Canada Ltd.
Original dated on:
No. 4671 Date: 2010/03/24

METRIC
WHOLE NUMBERS INDICATE MILLIMETRES
DECIMALIZED NUMBERS INDICATE METRES

LOCATION APPROVED
UNDERGROUND STRUCTURES

SUPR, U/G STRUCTURES COMMITTEE — DATE

NOTE:
LOCATION OF UNDERGROUND STRUCTURES AS SHOWN ARE BASED ON THE BEST INFORMATION AVAILABLE. BUT NO GUARANTEE IS GIVEN THAT ALL EXISTING UTILITIES ARE SHOWN OR THAT THE GIVEN LOCATIONS ARE EXACT. CONFIRMATION OF EXISTENCE AND EXACT LOCATION OF ALL SERVICES MUST BE OBTAINED FROM THE INDIVIDUAL UTILITIES BEFORE PROCEEDING WITH CONSTRUCTION.

BM 00-000
ELEV 200.000m

NO.	REVISIONS	YY/MM/DD	BY
0	ISSUED FOR CONSTRUCTION	10/03/24	CPK
A	ISSUED FOR 100% REVIEW	10/03/08	DJH

AECOM

This drawing has been prepared for the use of AECOM's client and may not be used, reproduced or relied upon by third parties, except as agreed by AECOM and its client, as required by law or for use by governmental reviewing agencies. AECOM accepts no responsibility, and denies any liability whatsoever, to any party that modifies this drawing without AECOM's express written consent. Do not scale this document. All measurements must be obtained from stated dimensions.

DESIGNED BY	AP	CHECKED BY	SBB / CGC
DRAWN BY	DJH	APPROVED BY	
HOR. SCALE	AS NOTED	RELEASED FOR CONSTRUCTION	
VERT. SCALE	AS NOTED		
DATE	YY/MM/DD	DATE	

PROFESSIONAL'S SEAL
PROVINCE OF MANITOBA
ORIGINAL SIGNED
A. POCHANART
Member 30017
MARCH 24/2010
REGISTERED PROFESSIONAL ENGINEER

CONSULTANT DRAWING NO.
0265-412-00_01-S-0801_RX.dwg

Winnipeg

THE CITY OF WINNIPEG
PUBLIC WORKS DEPARTMENT
ENGINEERING DIVISION

JUBILEE AVENUE OVERPASS REHABILITATION

REINFORCING SCHEDULE I

CITY DRAWING NUMBER B124-10-25
SHEET 25 OF 51
DRAWING No. 25
REV 0

PLOT: 10/03/24 11:05:12 AM

AECOM FILE NAME: 0265-412-00_01-S-0801_RX.dwg Saved By: crossmanc