A1 SIZE – 594mm x 841mm

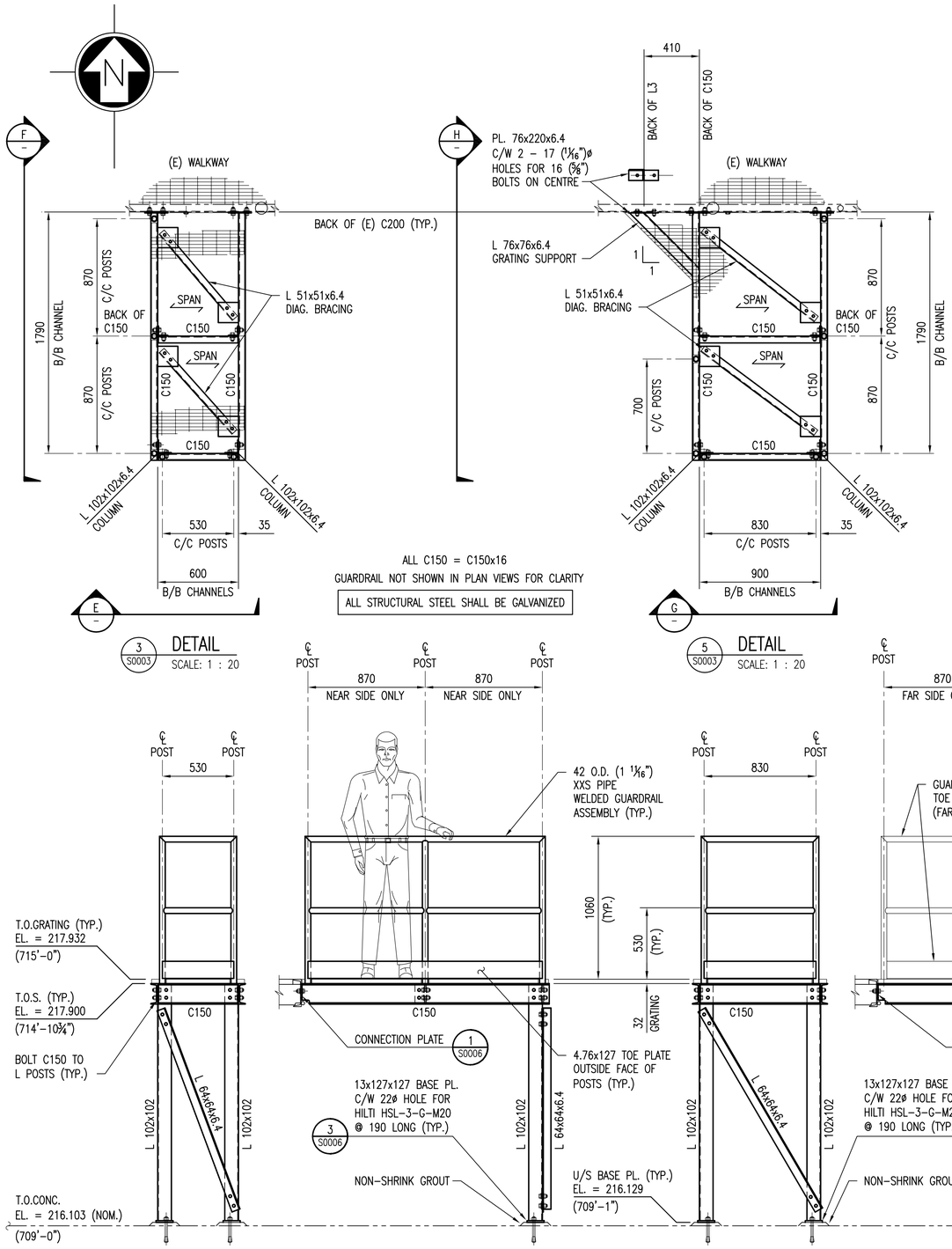


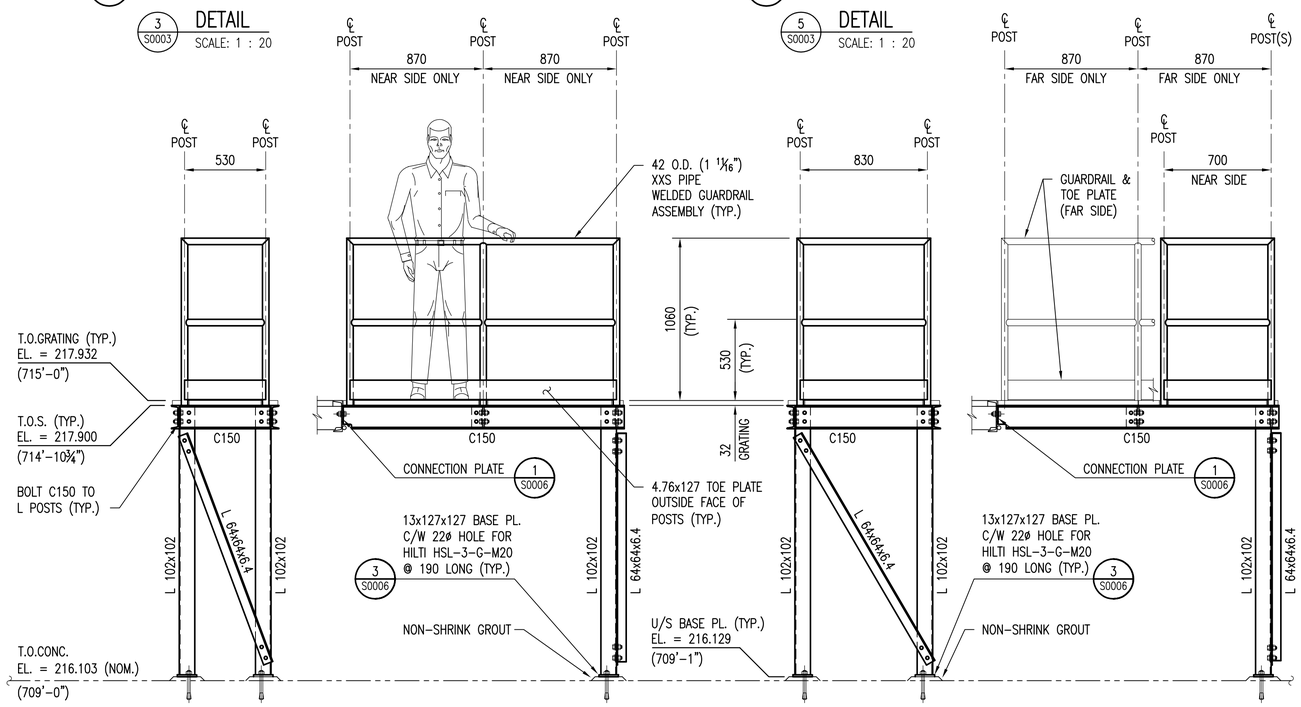


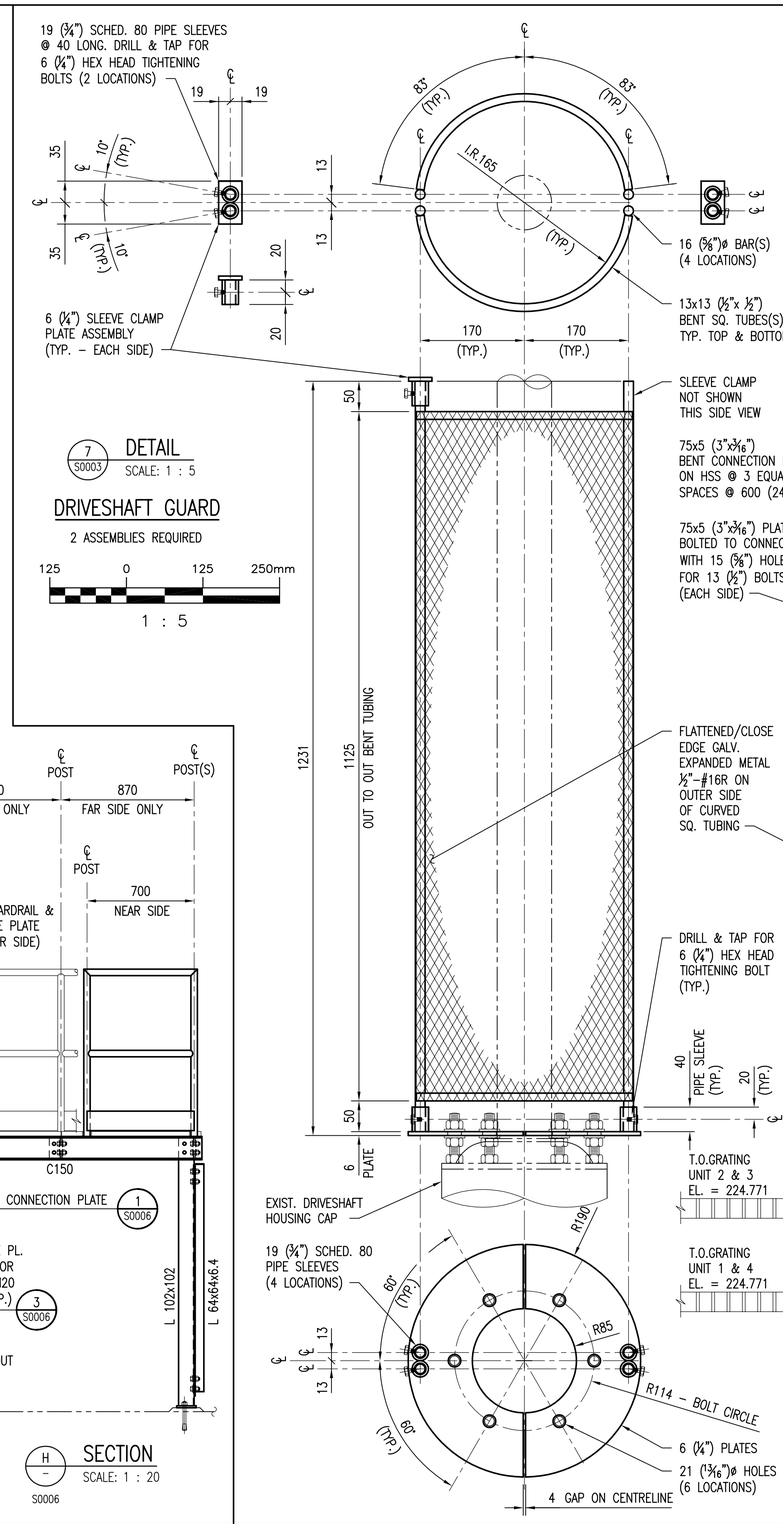


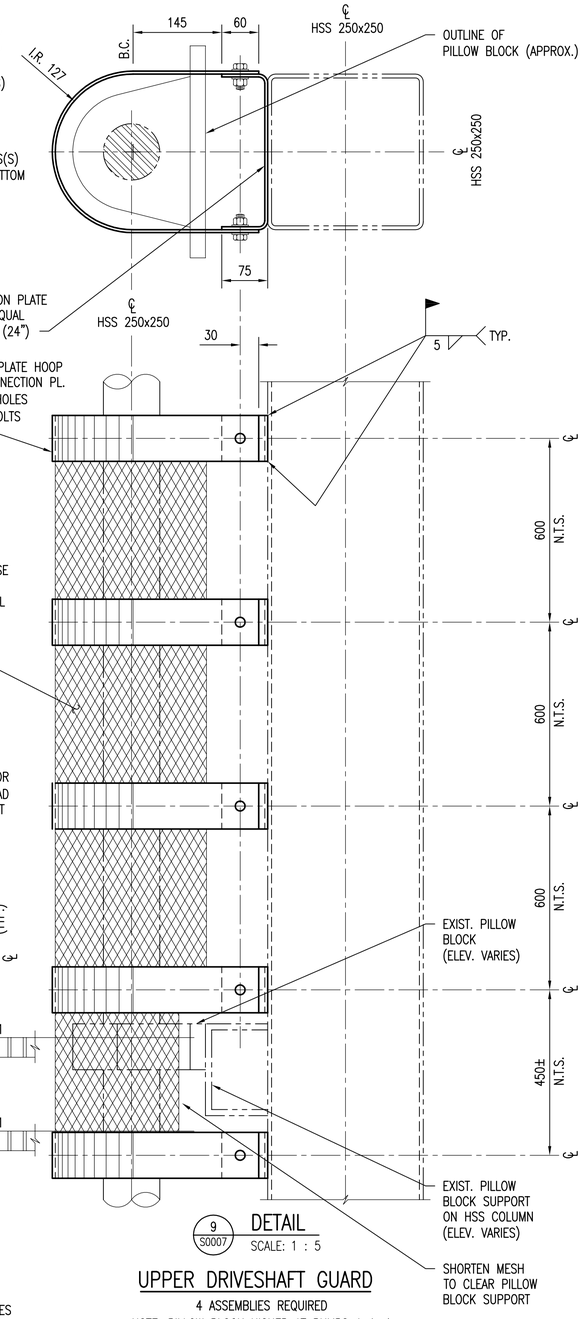


## NOTES:

1. SEE DRAWING 1–0102G–S0001 FOR GENERAL NOTES.
2. SEE DRAWING 1–0102G–S0004 FOR STRUCTURAL NOTES (JOB SPECIFIC).

| DRAWING NUMBER | REFERENCE DRAWINGS |
|---|---|
| 1–0102G–S0006 | DRY WELL G102–RSP & G103–RSP – DETAIL 4 |
| 1–0102G–S0004 | DRY WELL G101–RSP – DETAILS 1 & 2 |
| 1–0102G–S0003 | DRY WELL G101–RSP TO G104–RSP ACCESS PLATFORMS |

0.5 0 0.5 1m
1 : 20

APEGM Certificate of Authorization
SNC-Lavalin Inc.
No. 4489

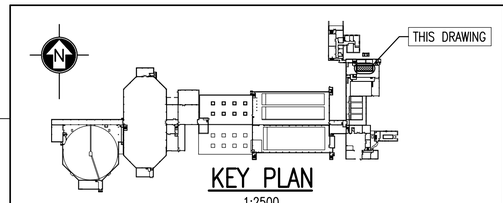


KEY PLAN
1:2500

| NO. | REVISIONS | DATE | DESIGN | CHECK |
|---|---|---|---|---|
| 0 | RELEASED FOR TENDER | 2010/05/21 | B.F.D. | |

SNC·LAVALIN
SNC–LAVALIN INC.
148 Nature Park Way
Winnipeg, MB, Canada R3P 0X7
204–786–8080

| | |
|---|---|
| DESIGNED BY: D. S. SIDHU | CHECKED BY: R. C. BEAN |
| DRAWN BY: B. DICKSON | APPROVED BY: C. J. REIMER |
| SCALE: 1:20 | RELEASED FOR CONSTRUCTION BY: J. VEILLEUX |
| DATE: 2009/12/21 | DATE: 2010/05/25 |
| CONSULTANT NO.: 112577–0114–42DD–0025 | |

ENGINEER'S SEAL
ORIGINAL DRAWING SEALED BY:
R. C. BEAN
SNC–LAVALIN
2010/05/21
REV. 0

Winnipeg THE CITY OF WINNIPEG
WATER AND WASTE DEPARTMENT

SOUTH END WATER POLLUTION CONTROL CENTRE
SAFETY UPGRADES
PLAN & SECTIONS
DRY WELL RAW SEWAGE PUMPS G102–RSP & G103–RSP
ACCESS PLATFORMS DETAILS 3 & 5

| CITY DRAWING NUMBER | SHEET | REV. | SIZE |
|---|---|---|---|
| 1–0102G–S0005 | 001 | 0 | A1 |

1–0102G–S0005–001–00.DWG

LAST SAVE: 2010/05/25 – 11:20am
PATH: M:\112577\0114\ENG\42STR\DD – General DWG\1–0102G–S0005–001–00.DWG