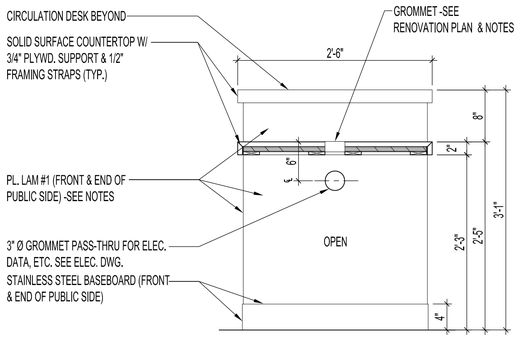

1 A5 A6 SECTION -OPEN LOWER COUNTER
SCALE: 1" = 1'-0"

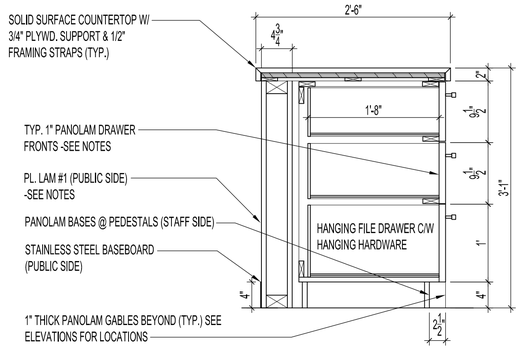

2 A5 A6 SECTION -DRAWER PEDESTAL
SCALE: 1" = 1'-0"

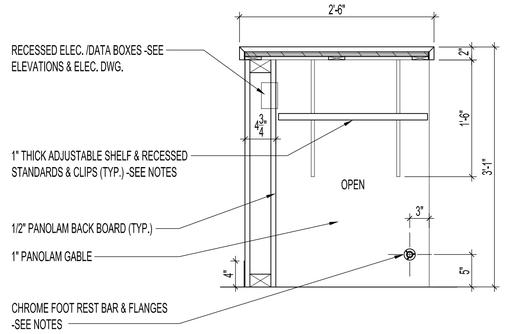

3 A5 A6 SECTION -SERVICE AREA
SCALE: 1" = 1'-0"

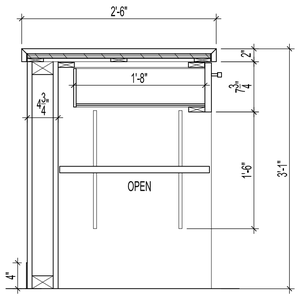

4 A5 A6 SECTION -DRAWER /SHELVING
SCALE: 1" = 1'-0"

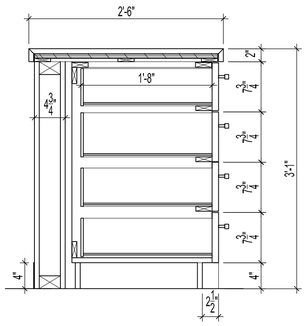

5 A5 A6 SECTION -DRAWER PEDESTAL
SCALE: 1" = 1'-0"

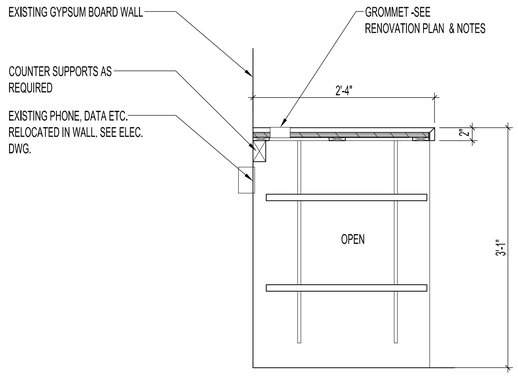

6 A5 A6 SECTION -OPEN SHELVING @ WALL
SCALE: 1" = 1'-0"

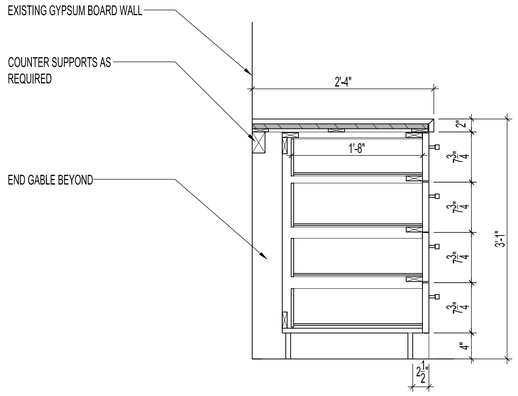

7 A5 A6 SECTION -DRAWER PEDESTAL
SCALE: 1" = 1'-0"

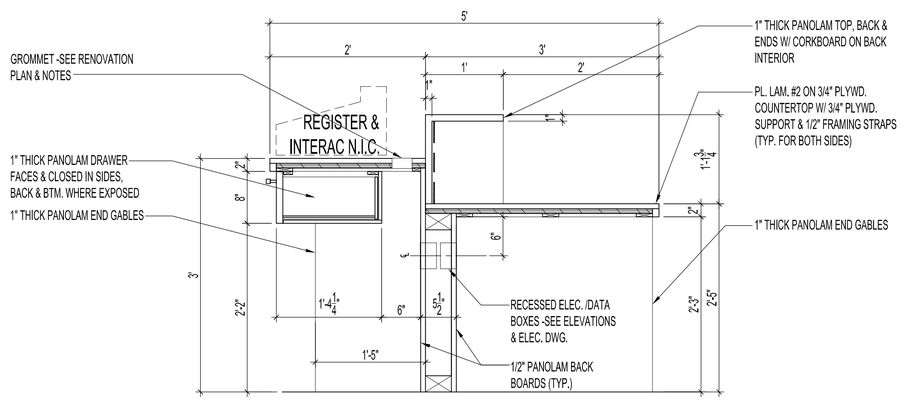

8 A5 A6 SECTION -REGISTER & STAFF DESK
SCALE: 1" = 1'-0"

NOTES :
STANDARDS AWMAC PREMIUM GRADE MILL STANDARD LATEST EDITION

CONSTRUCTION:
A) DRAWER SIDES, BACKS, AND BOTTOMS TO BE 1/2" PANOLAM.
B) ALL EXTERIOR SURFACES (INCLUDING TOPS, GABLES, BOTH SIDES OF DRAWER AND DOOR FRONTS TO HAVE 3M PVC EDGING AS NOTED FOR SPECIFIC MILLWORK.
C) ALL SUPPORT BLOCKING WITHIN MILLWORK TO BE CONCEALED FROM VIEW.
D) ALL UNITS TO BE FIRMLY SCRIBED WITHIN PARTITIONS.
E) ALL CONSTRUCTION TO BE 1" PARTICLE BOARD AS SPECIFIED.

SHOP DRAWINGS TO BE DONE AND SENT TO CONTRACT ADMINISTRATOR FOR APPROVAL PRIOR TO CONSTRUCTION.

MILLWORK HARDWARE
KNAPP & VOGT 1483 (UP TO 150 LB. LOAD RATING, DRAWER GLIDES HEAVY DUTY FULL EXTENSION)
DRAWERS OVER 6" HIGH & PRINTER SHELF DRAWERS 1248 (UP TO 50 LB. LOAD RATING, DRAWERS UNDER 6" HIGH
GROMMET 429.94.212 (56MM) HAFELE CHROME POL. ZINC DIE CAST
STAINLESS STEEL HANDLE HAFELE MODEL: 117.05.630
METAL SHELF SUPPORT AND STANDARDS K & V ZINC RECESSED INTO GABLES ENDS

ROD FOR FOOT REST
RICHELIEU: LENGTH TO MATCH MILLWORK, COLOUR: CHROME 1" DIA.
STEEL ROD, DELUXE OUTSIDE BRACKET, MODEL #; 3625-140, CHROME, 1" DIA.

GLIDES FOR GABLE ENDS
MFG: HAFELE, MODEL: 650.194.324, COLOUR: BLACK

CASH DRAWERS ONLY DEADBOLT
MFGR: HAFELE, SERIES: SYMO, MODEL: 232.25.610, LEFT CYLINDER LENGTH 22, COLOUR: MATT NICKEL

SUPPORT LEG & DISC BASE
MFGR: HAFELE, MODEL: 635.35.271 & 635.35.200, SIZE: 4 1/2" DIA. HEIGHT 27 1/2", COLOUR: SILVER /ALUMINIUM RAL 9006

PLASTIC LAMINATE #1 -WILSONART MADAGASCAR 7944-01

PLASTIC LAMINATE # 2 -ABET LAMINATI 507

SOLID SURFACE COUNTERTOP -DIMASTONE CITRUS P9186 (3/4" THICKNESS)

PARTICLE BOARD -PANOLAM Z-CORE SNOW WHITE S417 SATIN TEXTURE, 1" THICKNESS FOR GABLES, SHELVING & DRAWER FRONTS C/W PVC 3mm EDGING. BACK BOARD OF CIRC. DESK TO BE 1/2" PANOLAM. SEE SECTIONS & ELEVATIONS FOR LOCATIONS.

4" STAINLESS STEEL BASEBOARD- PUBLIC SIDE & END OF CIRCULATION DESK TO BE GLUED TO CABINET BASE
20 GA T 304 #4 XL BUFF -SIMILAR TO MIRROR FINISH #4 ST. ST. WITH A STRAIGHT GRAIN.

NO.	REVISION/DESCRIPTION	BY	DATE
1	DESIGN LEAD HAS CHANGED	MMK	2009.06.01

SEALS

DRAWN BY MMK | CHECKED BY | APPROVED
DATE 2010.02.24 | USER APPROVAL

Winnipeg
CITY OF WINNIPEG
PLANNING, PROPERTY AND DEVELOPMENT DEPARTMENT
MUNICIPAL ACCOMMODATIONS DIVISION
3 – 65 GARRY ST. R3C 4K4

PROJECT
FORT ROUGE LIBRARY
INTERIOR UPGRADING
NEW CIRCULATION DESK
625 OSBORNE STREET

SHEET TITLE
NEW CIRCULATION DESK
SECTIONS

SCALE	PROJECT NO.	SHEET NO.
AS SHOWN	2008-019-01	A6R1

DRAWING SHEET SIZE: A1 (841mm x 594mm) PLOT 1:1