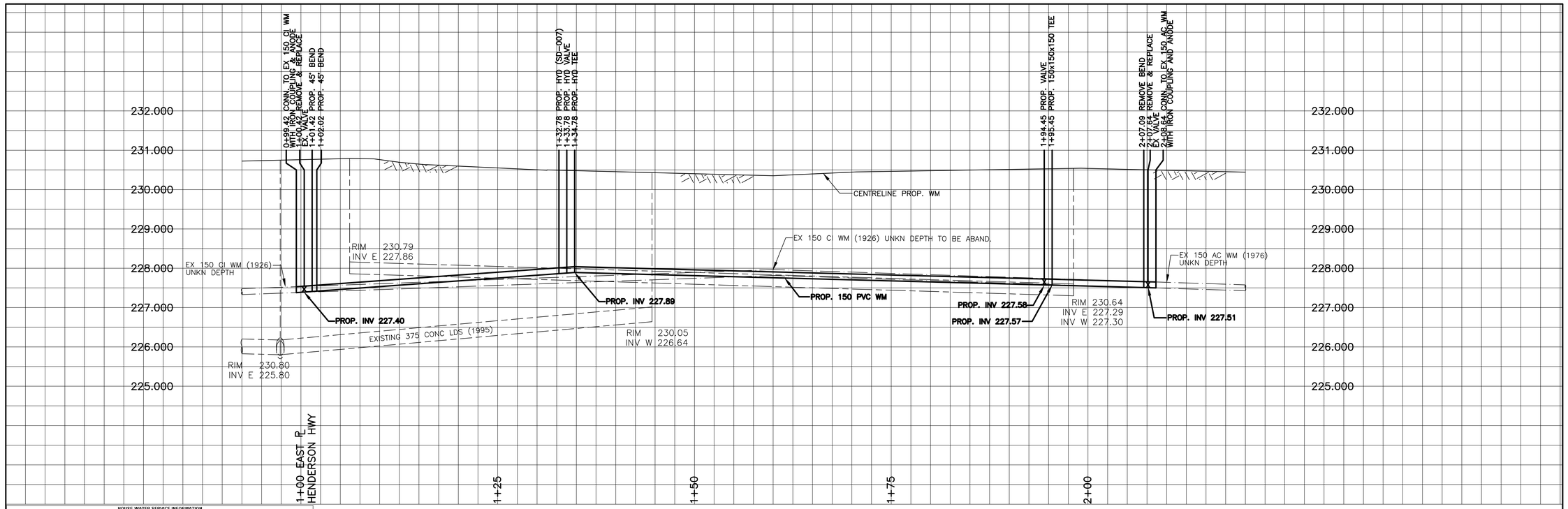

CHAINAGE ALONG SOUTH PROPERTY LINE OF KIMBERLY AVENUE

KIMBERLY AVENUE

HOUSE WATER SERVICE INFORMATION

ADDRESS	NATURE OF SERVICE	SIZE (mm)	TYPE	SHORT & LONG MEASUREMENT	CORP LOCATION	REMARKS
205	Kimberly Avenue Residential	19	Copper	2 W E/L 5.6 OUT	58.3 W OF HYDT	
207	Kimberly Avenue Residential	19	Copper	10.7 E OF W COR HSE	43.1 W OF HYDT	WATER/ON
211	Kimberly Avenue Residential	19	Copper	8.7 E OF W BLDG LINE	25.9 W OF HYDT	213 KIMBERLY CORP 23.3 E/W MH
216	Kimberly Avenue Residential	19	Copper	0.9 W/WHL	1.8 E OF S/C	CORP 91.4 E/VLV BOX APRXD - DIRECT TAPPED TO 0.15 AC WATERMAIN
731	Henderson Highway Commercial	50	Copper	1.2 W E/L 14.6 OUT	26.8 N OF S HYDT	
739	Henderson Highway Commercial	25	Lead	13.4 E OF W LOT LINE	13.1 E VALVE BOX	

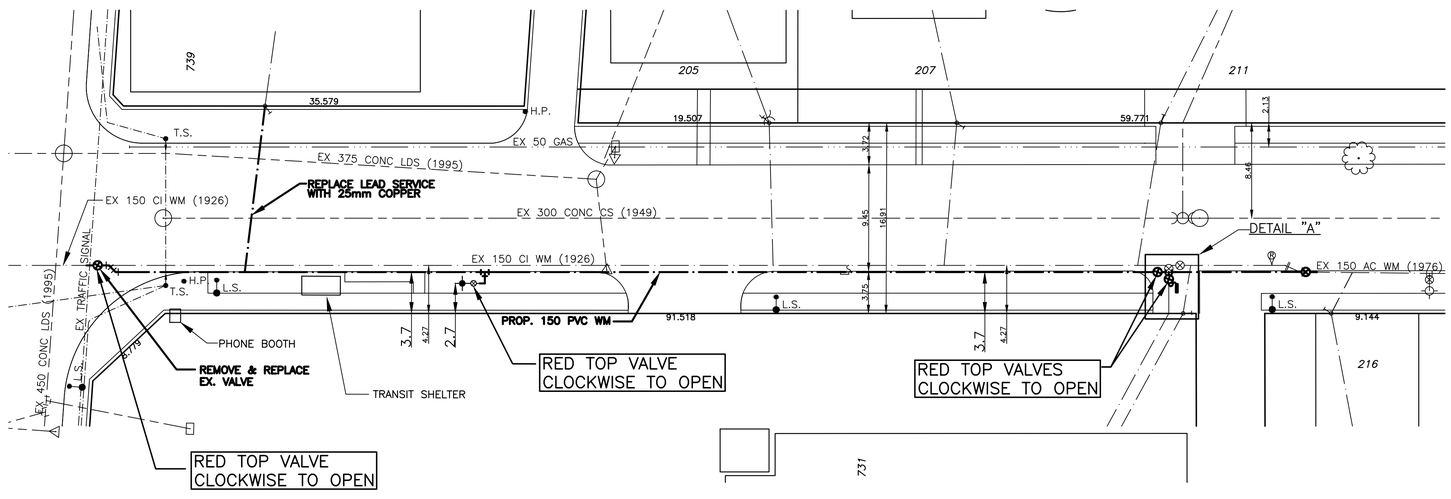

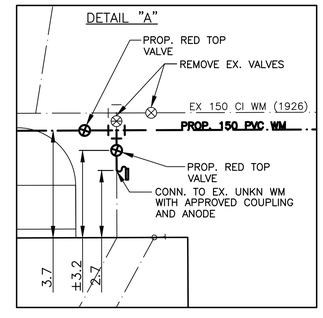

NOTES:

1. ALL GATE VALVES ARE COUNTER-CLOCKWISE TO CLOSE WITH A RED OPERATING NUT.
2. WATERMAIN TO BE INSTALLED BY TRENCHLESS METHODS.
3. BACKFILL IS CLASS 5 WITHIN BOULEVARD AND CLASS 3 WHEN WITHIN PAVEMENT/SIDEWALK OR WHEN WITHIN 1.0m OF PAVEMENT OR SIDEWALK.
4. WATER SERVICES ARE 19mm UNLESS OTHERWISE NOTED.
5. MINIMUM COVER TO TOP OF WATERMAIN SHALL BE 2.4m.
6. LOCATION OF ALL SERVICES TO BE CONFIRMED IN FIELD.
7. EXPOSE EXISTING WATERMAIN TO CONFIRM DEPTH PRIOR TO CONSTRUCTION.
8. ALL LEAD SERVICES TO BE RENEWED TO PROPERTY LINE.
9. SERVICES TO BE RENEWED SHALL BE REPLACED FROM WATERMAIN TO PROPERTY LINE. ALL OTHERS TO BE RECONNECTED.

METRIC
WHOLE NUMBERS INDICATE MILLIMETRES
DECIMALIZED NUMBERS INDICATE METRES

APEGM
Certificate of Authorization
Genivar Consultants Limited Partnership
No. 4318 Expiry April 30, 2011

EXISTING	LEGEND – PLAN	PROPOSED	EXISTING	LEGEND – PLAN	PROPOSED	EXISTING	LEGEND – PROFILE	PROPOSED
	WATERMAIN			REDUCER		150mm W.M.	WATERMAIN	150mm W.M.
	HYDRANT			PLUG			VALVE	
	VALVE			TRAFFIC SIGNAL		300mm L.D.S.	LAND DRAINAGE SEWER	300mm L.D.S.
	LAND DRAINAGE SEWER			GAS		250mm W.W.S.	WASTE WATER SEWER	250mm W.W.S.
	WASTE WATER SEWER			HYDRO			JUNCTIONS	
	MANHOLE			M.T.S.			CULVERT	
	CATCH BASIN			C.B. LEAD				
	CURB STOP			SURVEY BAR				
	TEE			TREE				
	BEND		H.P.	HYDRO POLE				
	ANODE		L.S.	LAMP STANDARD				

LOCATION APPROVED

SUPV. U/G STRUCTURES COMMITTEE — DATE

NOTE:

LOCATION OF UNDERGROUND STRUCTURES AS SHOWN ARE BASED ON THE BEST INFORMATION AVAILABLE. NO GUARANTEE IS GIVEN THAT ALL EXISTING UTILITIES ARE SHOWN OR THAT THE GIVEN LOCATIONS ARE EXACT. CONFIRMATION OF EXISTENCE AND EXACT LOCATION OF ALL SERVICES MUST BE OBTAINED FROM THE INDIVIDUAL UTILITIES BEFORE PROCEEDING WITH CONSTRUCTION.

B.M. CWBM12-064
ELEV. 230.413

NO.	REVISIONS	DATE	BY
1	BID OPPORTUNITY 506-2010	JUNE/10	PR

GENIVAR
10 PRAIRIE WAY WINNIPEG, MANITOBA R2J 3J8
PH: (204)-477-6650 FAX: (204)-474-2864

DESIGNED BY	LV/PR	CHECKED BY	SM
DRAWN BY	LV	APPROVED BY	IMcK
HOR. SCALE:	1:250	RELEASED FOR CONSTRUCTION	ORIGINALLY SIGNED BY K. ZUREK P. ENG
VERT. SCALE:	1:50		
DATE	JUNE 2010	DATE	JUNE 16, 2010

ENGINEERS SEAL
PROVINCE OF MANITOBA
I. G. McKINNON
REGISTERED PROFESSIONAL ENGINEER

CONSULTANT DRAWING NO.
010-051-12

Winnipeg

THE CITY OF WINNIPEG
WATER AND WASTE DEPARTMENT

2010 CAPITAL WORKS
WATERMAIN RENEWALS

KIMBERLY AVENUE

HENDERSON HIGHWAY TO
200M EAST OF HENDERSON HIGHWAY

SHEET 1 OF 1

CITY DRAWING NO.
D-12103

ACAD 2007