D SIZE 22" x 34" (559mm x 864mm)

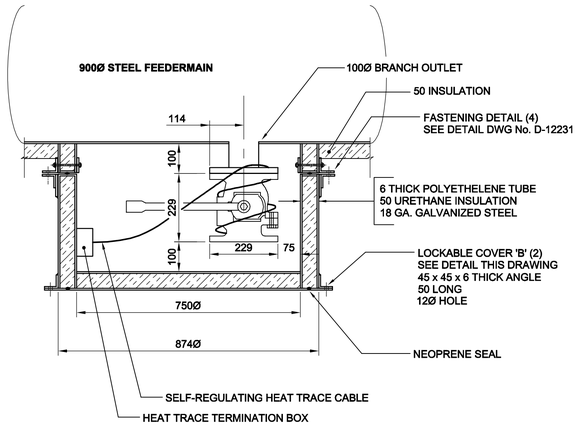

NEW DRAIN VALVE & DRAIN VALVE PROTECTION BOX

0 0.1 0.2 0.3 m SCALE 1:10

SECTION

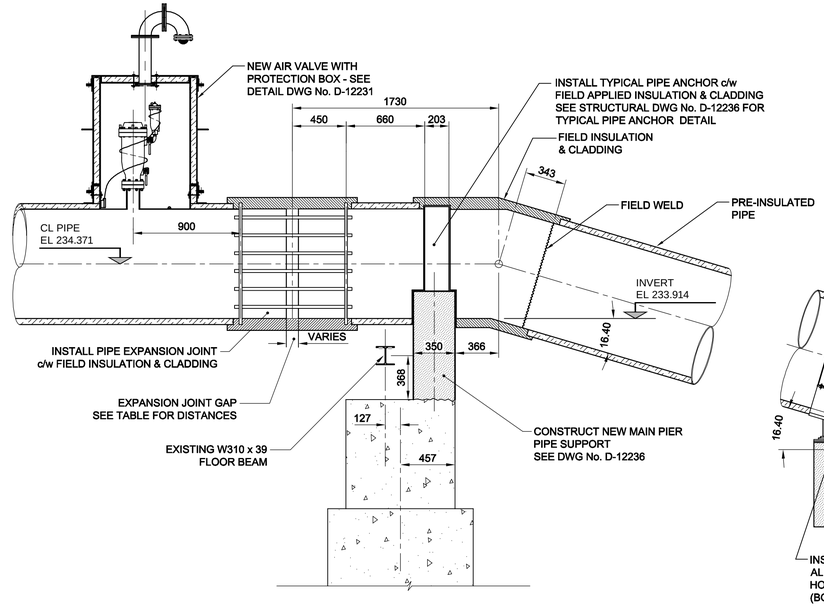

SU2 - NORTH BRIDGE PIER INSTALLATION DETAIL

0 0.25 0.5 0.75 m SCALE 1:25

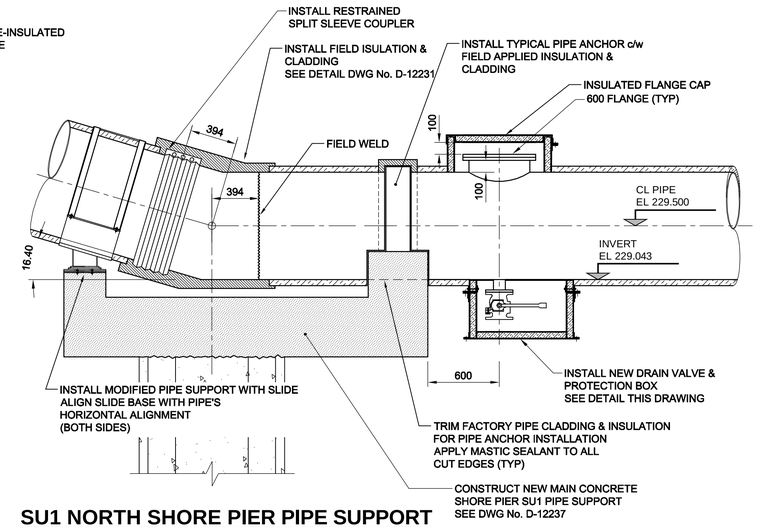

SU1 NORTH SHORE PIER PIPE SUPPORT

0 250 500 750 mm SCALE 1:25

(TYPICAL FOR OTHER SIDE)

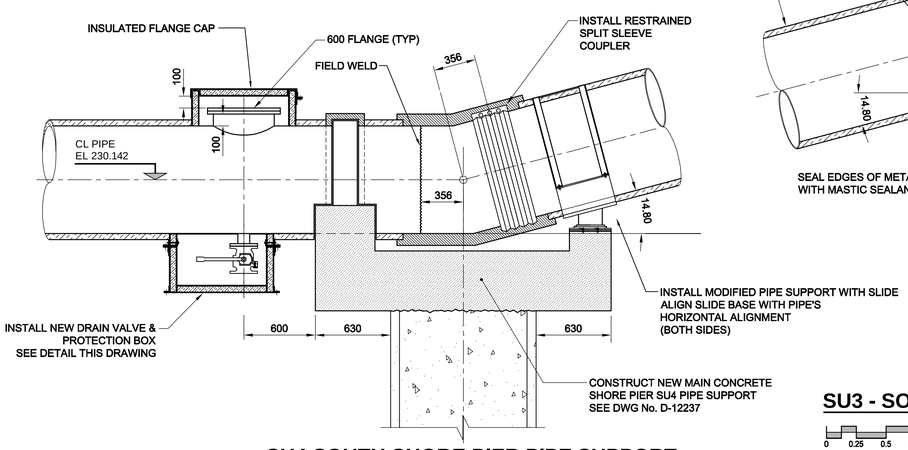

SU4 SOUTH SHORE PIER PIPE SUPPORT

0 250 500 750 mm SCALE 1:25

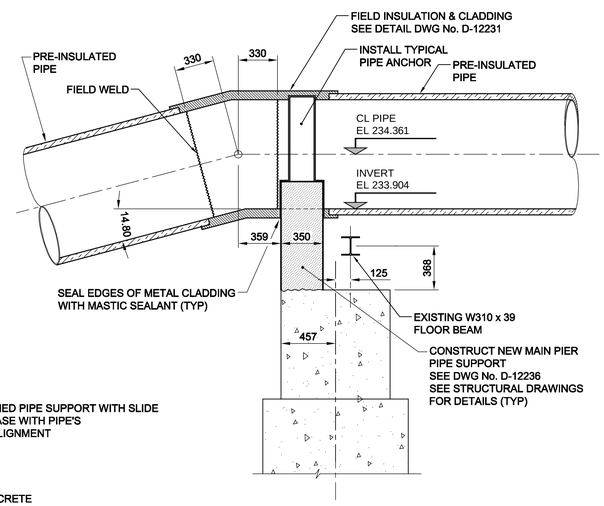

SU3 - SOUTH BRIDGE PIER INSTALLATION DETAIL

0 0.25 0.5 0.75 m SCALE 1:25

EXPANSION JOINT TABLE

Installation Temperature	Installed Joint Gap		Overall Length of Expansion Joint	
[°C]	[mm]	[in]	[mm]	[in]
15	80	3.16	787	30.97
10	94	3.68	800	31.49
5	107	4.21	813	32.02
0	120	4.74	827	32.55
-5	134	5.26	840	33.07
-10	147	5.79	853	33.60
-15	160	6.32	867	34.13
-20	174	6.84	880	34.65
-25	187	7.37	894	35.18
-30	201	7.89	907	35.70
-35	214	8.42	920	36.23
-40	227	8.95	934	36.76
-45	241	9.47	947	37.28
-50	254	10.00	960	37.81

APEGM
Certificate of Authorization
AECOM Canada Ltd.
No. 4671 Date: 11 May 2011

BID OPPORTUNITY NO. 854-2010

EXISTING	LEGEND - PLAN	NEW	EXISTING	LEGEND - PLAN	NEW	EXISTING	LEGEND - PROFILE	NEW
150 WM	WATERMAIN	150 WM		CURB STOP		150 WM	WATERMAIN	150 WM
	HYDRANT			REDUCER			HYDRANT	
	VALVE			COUPLING			VALVE	
300 LDS	LAND DRAINAGE SEWER	300 LDS		ANODE		300 LDS	LAND DRAINAGE SEWER	300 LDS
250 WWS	WASTE WATER SEWER	250 WWS		HYDRO		250 WWS	WASTE WATER SEWER	250 WWS
	MANHOLE			MTS			PAVEMENT CROWN	
	CATCH BASIN			GAS			N/W PROPERTY LINE	
	CURB INLET			TESTHOLE			S/E PROPERTY LINE	
	CULVERT			LAMP STANDARD			N/W GUTTER	
	PIPE ABANDONMENTS			TREE			S/E GUTTER	
	SURVEY BAR							

LOCATION APPROVED
UNDERGROUND STRUCTURES

SUPR. U/G STRUCTURES COMMITTEE DATE

NOTE:
LOCATION OF UNDERGROUND STRUCTURES AS SHOWN ARE BASED ON THE BEST INFORMATION AVAILABLE. BUT NO GUARANTEE IS GIVEN THAT ALL EXISTING UTILITIES ARE SHOWN OR THAT THE GIVEN LOCATIONS ARE EXACT. CONFIRMATION OF EXISTENCE AND EXACT LOCATION OF ALL SERVICES MUST BE OBTAINED FROM THE INDIVIDUAL UTILITIES BEFORE PROCEEDING WITH CONSTRUCTION.

NO.	REVISIONS	YY/MM/DD	BY
0	ISSUED FOR CONSTRUCTION	11/05/09	WJd

AECOM

This drawing has been prepared for the use of AECOM's client and may not be used, reproduced or relied upon by third parties, except as agreed by AECOM and its client, as required by law or for use by governmental reviewing agencies. AECOM accepts no responsibility, and denies any liability whatsoever, to any party that modifies this drawing without AECOM's express written consent.
Do not scale this document. All measurements must be obtained from stated dimensions.

DESIGNED BY	MGM	CHECKED BY	FMI
DRAWN BY	WJd	APPROVED BY	AN
HOR. SCALE	AS NOTED	RELEASED FOR CONSTRUCTION	K. Zurek
VERT. SCALE	AS NOTED	DATE	May 11/11

PROFESSIONAL'S SEAL
REVISION '0'
Issued For Construction
Sealed By:
C. C. MACEY
11 May 2011

CONSULTANT DRAWING NO.
D265-230-02_01-C-4001_RX.dwg

Winnipeg

THE CITY OF WINNIPEG
WATER AND WASTE DEPARTMENT

REHABILITATION / REPLACEMENT OF THE MID TOWN FEEDERMAIN AT THE ASSINIBOINE RIVER

CIVIL

PIPE SECTIONS & DETAILS
South & North Connections

SHEET 4 OF 18

CITY DRAWING NUMBER
D-12230 REV 0

PLOT: 11/05/11 11:30:43 AM
AECOM FILE NAME: D265-230-02_01-C-4001_RX.dwg Saved By:
AECOM REVIEW DRFT CHK KMB
Revision/Date